MAGNETROL® / AMETEK®
LEVEL MEASUREMENT SOLUTIONS

Series 3 Liquid Level Switches
ASME B31.1, ASME B31.3 and NACE Construction

DESCRIPTION

Series 3 float-actuated level switches meet ASME B31.1 or ASME B31.3 requirements. They are designed to provide critical alarm set points in clean liquid applications.

FEATURES

- NACE MR0175/MR0103 construction available for flanged cage models
- 14-inch (356 mm) side/side process connections available as standard
- Choice of sealed or flanged float chamber design
- Service pressures up to 1680 psig (115.8 bar) for ASME B31.1 and 2240 psig (154.4 bar) for ASME B31.3 & NACE
- Process temperatures up to +1000 °F (+538 °C)
- Specific gravity ratings as low as 0.33
- Polymer coated aluminum housings with various approvals for electrical switches
- ASME B31.1, B31.3 or NACE Certificate of Conformance supplied
- ASME B31.1 model with Cr-Mo chamber
- Choice of available switch styles, including dry contact, hermetically sealed, pneumatic bleed and non-bleed
- Choice of single or multiple switches for single or staged applications
- 1", 1½" or 2" tank connections available in either NPT, socket weld, flanged side/side or flanged side/bottom configuration
- Special materials of construction available upon request
- Available with special coatings including Epoxy, Carbo Zinc® 11 Primer and Carboline Top Coat, Dimetcote® and Amercoat®
- Optional high or low temperature insulation available



B35 Sealed Cage Level Switch



B3F Flanged Cage Level Switch

APPLICATIONS

ASME B31.1 construction for use on boilers and in power plants.

- Feedwater heaters
- Condensate drip pots
- Deaerators
- Steam drums
- Flash tanks
- Hot wells

ASME B31.3 construction for use in refineries and petro-chemical plants.

- Gas/oil separators
- Knockout drums
- Crude/salt water separators
- Receivers
- Flare pots
- Accumulators

OPTIONS

Many options are available for Series 3 level switches. Should you require an option not listed, consult the factory for further information.

TANK CONNECTIONS AND INSTALLATION DIMENSIONS

In addition to the standard slip-on or weld neck R.F. flanges, many other process, vent and drain connections are available, including:

- Socketweld
- DIN
- RTJ
- JIS

Special flange gasket surface finishes are also available, and cages may be manufactured to allow special process connections.

MATERIALS OF CONSTRUCTION

Chambers and internal components on some models available in other metal alloys.

- 304 SS
- 316 SS
- Hastelloy® C
- Monel
- Carpenter 20®
- Duplex Stainless Steel

WELDING

Stress relieving of chamber welds is available for flanged cage models and the model B35-7.

ACTUATING LEVELS

- Special switch set points and/or differentials
- Tandem floats—where the switch actuating levels are 8 inches (203 mm) or more apart.
- Multiple switches

ENCLOSING TUBE

Integrally welded (socket type weld) enclosing tube design available for flanged cage models.

INTERFACE CALIBRATION

Units with interface calibration are custom designed for each application. Specific gravity differences as small as 0.10 may be addressed. Consult the factory for all interface calibrations.

EXAMINATIONS/TESTS

Magnetrol is equipped to provide a full range of special quality control testing, including:

- Dye penetration
- Radiography
- Charpy
- Magnetic particle
- Extended hydrostatic
- Ultrasonic
- Hardness testing

CHROME-MOLY CONSTRUCTION

The model B35 is available with a P22/F22 chrome-moly chamber and 321 SS float for high pressure applications at high temperatures.v

STANDARD ASME B31.1 CONSTRUCTION

PRODUCT DESIGN

Pressure vessels are designed within code specified stress limits. Design calculations, design prints and weld qualifications are available for audit. All chamber branch and circumferential weld joints are designed to achieve FULL penetration.

WELDING

All welding is performed by qualified welders and per procedures required by the ASME Boiler Pressure Vessel Code Sec. IX. Welds are visually inspected for FULL penetration. All other nondestructive examination is performed per ASME B31.1.

MATERIALS OF CONSTRUCTION

All pressure-retaining materials are procured with Certificates of Conformance to assure compliance of components with required standards. Chrome-Moly models are post-weld heat-treated.

HYDROSTATIC TEST

All chambers are hydrostatically tested at 1.5 times the design pressure. the design pressure.

STANDARD ASME B31.3 CONSTRUCTION

PRODUCT DESIGN

Pressure vessels are designed within code specified stress limits. Design calculations, design prints and weld qualifications are available for audit. All chamber branch and circumferential weld joints are designed to achieve FULL penetration.

WELDING

All welding is performed by qualified welders and per procedures required by the ASME Boiler Pressure Vessel Code Sec. IX. Welds are visually inspected for FULL penetration; and 5% radiographic inspection of weld is performed per ASME B31.3.

MATERIALS OF CONSTRUCTION

All pressure-retaining materials are procured with Certificates of Conformance to assure compliance of components with required standards.

HYDROSTATIC TEST

All chambers are hydrostatically tested at 1.5 times the design pressure.

STANDARD NACE CONSTRUCTION

WELDING

All welding is performed by qualified welders and per procedures required by the ASME Boiler Pressure Vessel Code Sec. IX. Carbon steel pressure boundary parts are post weld stress relieved. All welds and heat affected zones are hardness tested to ensure compliance with NACE maximum hardness requirements.

MATERIALS OF CONSTRUCTION

Only NACE listed materials are used for pressure retaining parts. Certificates of Conformance assure compliance of components to required material standards.

HYDROSTATIC TEST

All chambers are hydrostatically tested at 1.5 times the design pressure.

TECHNOLOGY

A permanent magnet ① is attached to a pivoted switch actuator ②. As the float or displacer ③ rises with the liquid level, it raises the attraction sleeve ④ into the field of the magnet, which then snaps against the non-magnetic enclosing tube ⑤, actuating the switch ⑥. The enclosing tube provides a static pressure boundary between the switch mechanism and the process. On a falling level, an inconel spring retracts the magnet, deactuating the switch.

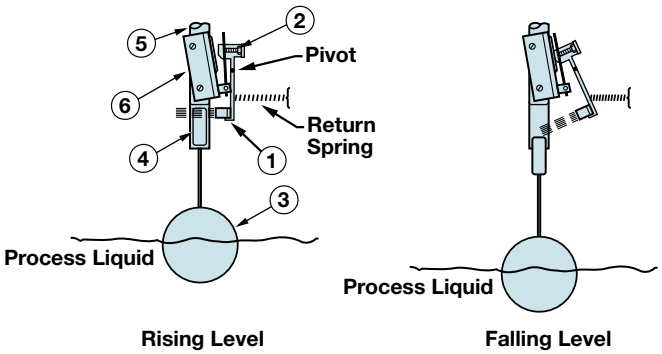

AGENCY APPROVALS

EMC directive 2014/30/EU (electromagnetic compatibility)
The following standard has been applied: EN 61326-1:2013-
(Low Voltage Directive-CE)

005-8047-003
Approval: FM Type 4X
Housing Material: Carbon Steel/Aluminum

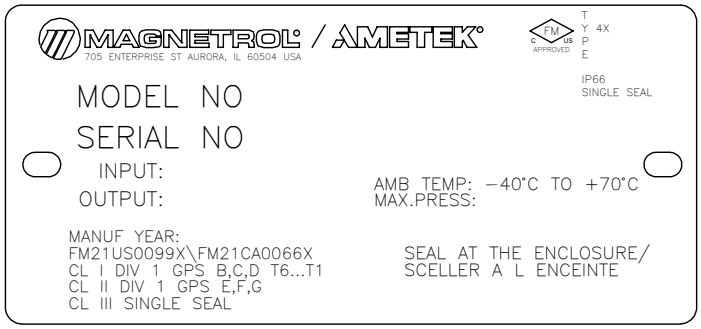

005-8049-009
Approval: FM US/CA
Housing Material: Aluminum

AGENCY APPROVALS

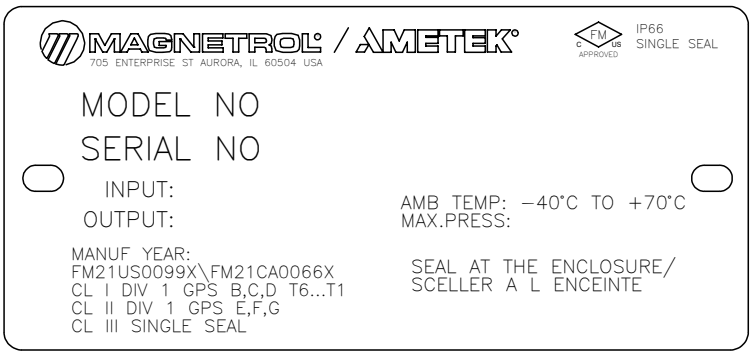

005-8049-072

Approval: FM US/CA
Housing Material: Cast Iron

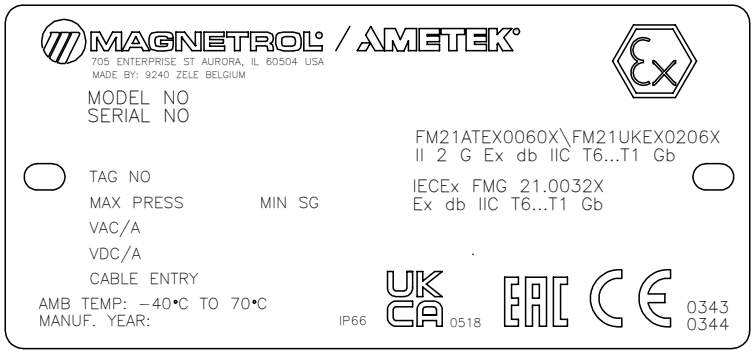

005-8060-008

Approval: ATEX/IECEx
Housing Material: Aluminum

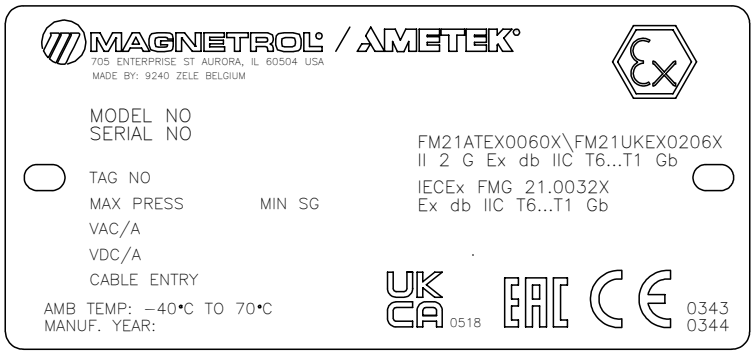

005-8060-021

Approval: ATEX/IECEx
Housing Material: Cast Iron

AGENCY APPROVALS

Maximum Pressure Ratings:

These are the ranges of process pressure ranges based on each individual model as mention in each individual manual.

Nominal Thickness (in)	Minimum Thickness (in)	Pressure Rating for 316 SST Version (psig)
0.035	0.0295	1300
0.065	0.0595	2710
0.093	0.087	5000

When the equipment is installed in process temperatures higher than +85°C the temperature classification must be increased according to the following table as per IEC60079-0.

Maximum Process Temperature	Temperature Classification
<85°C	T6
<100°C	T5
<135°C	T4
<200°C	T3
<300°C	T2
<450°C	T1

Additional Approvals:

- Series C, U, W, and X switch mechanisms, along with Tuffy T3X designs, in Aluminum or Cast Iron housings, are certified for Ex ia IIC T6 Ga per Certificate No. IECEx KIWA 18.0011X and ATEX II 1 G Ex ia IIC T6 Ga per Certificate No. KIWA 18ATEX0022 X Issue: 1.
- Series HS, F, 8, and 9 switch mechanisms, in Type 4X housings, are CSA certified for Class I, Div 2, Groups A, B, C & D.

Specific Conditions of Use

1. The flamepaths of the equipment are not intended to be repaired. Consult the manufacturer if repair of the flamepath joints is necessary.
2. Refer to the manufacturer's instructions to reduce the potential of an electrostatic charging hazard on the equipment enclosure.
3. The cast iron enclosure for ATEX, UKEX and IECEx certification does not contain an IP rating.
4. The cast iron enclosure for North American certification does not contain a Type 4X rating.
5. For installation with ambient temperature of 70°C, refer to the manufacturer's instruction for guidance on proper selection of conductors.

SPECIFICATIONS

SWITCH MECHANISMS AND ENCLOSURES

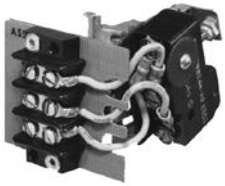

SERIES B, C, D & R DRY CONTACT SWITCHES

- Designs for AC and DC current applications
- Process temperatures to +1000 °F (+538 °C)



SERIES J & K PNEUMATIC SWITCHES

- Suited for applications where electrical power is not available
- Bleed and non-bleed designs
- Process temperatures to +400 °F (+204 °C)



SERIES F, HS, 8 & 9 HERMETICALLY SEALED SWITCHES

- Ideal for use in salt and other corrosive atmospheres
- HS is a positively pressurized capsule for entire mechanism and contacts
- Process temperatures to +1000 °F (+538 °C)



SWITCH ENCLOSURES

- TYPE 4X/7/9 aluminum enclosures
- Designed to meet Class I, Div. 1, Groups C & D and Class I, Div. 1 Group B
- Cast iron TYPE 4X/7/9 enclosures for hazardous areas greater than +750 °F (+399 °C)
- Optional housing heaters and drains available for some enclosures
- Pneumatic switch mechanisms available with a NEMA 1 enclosure

BASIC ELECTRICAL RATINGS

Voltage	Switch Series and Non-Inductive Ampere Rating							
	B	C	D	F	HS	R	8	9
120 VAC	15.00	15.00	10.00	2.50	5.00	1.00	1.00	—
240 VAC	15.00	15.00	—	—	5.00	1.00	—	—
24 VDC	6.00	6.00	10.00	4.00	5.00	1.00	3.00	0.50
120 VDC	0.50	1.00	10.00	0.30	0.50	0.40	—	—
240 VDC	0.25	0.50	3.00	—	0.25	—	—	—

ASME B31.1 ACTUATING LEVELS

For float operated units, levels are dependent upon the specific gravity of the process media.

NOTE: Actuation levels for saturate steam service ratings are shown for single switch units with 1" process connections only. Consult factory for units with two and three set point and 1½" or 2" process connections.

SATURATED STEAM SERVICE RATINGS (See model selection charts for maximum ratings)

ASME B31.1 SEALED CAGE MODELS WITH 1" PROCESS CONNECTIONS

INCHES

Sealed Cage Models	Pressure (psig)	Temperature (° F)	Specific Gravity	Actuation Levels	
				HL	LL
B35	812	520	0.76	3.33	3.91
C35	379	443	0.83	4.05	4.57
G35	546	476	0.80	4.33	4.77
V35	1044	550	0.74	3.19	3.81
Z35	1113	558	0.73	3.39	3.97

Levels ±0.25" (6 mm)

MILLIMETERS

Sealed Cage Models	Pressure (bar)	Temperature (° C)	Specific Gravity	Actuation Levels	
				HL	LL
B35	56	271	0.76	85	99
C35	26	227	0.83	103	116
G35	38	247	0.80	110	121
V35	72	288	0.74	81	97
Z35	77	292	0.73	86	101

Levels ±0.25" (6 mm)

ASME B31.1 FLANGED CAGE MODELS W/1" PROCESS CONNECTIONS – INCHES

Flanged Cage Models	Head Flange Lbs.	Pressure (psig)	Temperature (° F)	Specific Gravity	Actuation Levels	
					HL	LL
B3F	150	201	388	0.87	3.32	4.13
	300	601	489	0.79	2.82	3.53
	600	819	523	0.76	2.67	3.57
G3F	150	201	388	0.87	5.32	5.75
	300	601	481	0.79	4.62	5.06
	600	819	523	0.76	4.29	5.00
K3F	600	1123	559	0.73	4.21	4.65
Z3F	600	1132	560	0.73	3.50	4.09
	900	1564	602	0.68	3.18	3.84

Levels ±0.25" (6 mm)

ASME B31.1 FLANGED CAGE MODELS W/1" PROCESS CONNECTIONS – MILLIMETERS

Flanged Cage Models	Head Flange Lbs.	Pressure (psig)	Temperature (° F)	Specific Gravity	Actuation Levels	
					HL	LL
B3F	150	14	199	0.87	84	105
	300	41	254	0.79	72	90
	600	56	271	0.76	68	91
G3F	150	14	199	0.87	135	146
	300	41	249	0.79	117	129
	600	56	271	0.76	109	127
K3F	600	77	293	0.73	107	118
Z3F	600	78	293	0.73	89	104
	900	108	317	0.68	81	98

Levels ±0.25" (6 mm)

ASME B31.3 DISPLACER MODELS

DISPLACER MODELS WITH 1" PROCESS CONNECTIONS – INCHES

Model Code	Process Temp. ° F	Liquid Specific Gravity													
		0.40		0.50		0.60		0.70		0.80		0.90		1.00	
		HL	LL	HL	LL	HL	LL	HL	LL	HL	LL	HL	LL	HL	LL
B34	100	1.30	4.77	2.17	5.00	2.73	5.16	3.13	5.28	3.44	5.37	3.67	5.45	3.86	5.51
	200	1.24	4.70	2.13	4.95	2.70	5.11	3.11	5.24	3.42	5.34	3.66	5.41	3.85	5.48
	300	1.18	4.62	2.09	4.88	2.67	5.06	3.09	5.19	3.40	5.30	3.64	5.38	3.84	5.45
C34	100	4.56	8.44	5.75	8.94	6.56	9.25	7.13	9.50	7.50	9.69	7.88	9.81	8.13	9.94
	200	4.19	8.06	5.50	8.63	6.31	9.00	6.94	9.25	7.38	9.50	7.69	9.63	8.00	9.75
	300	3.81	7.63	5.19	8.25	6.06	8.69	6.69	9.00	7.19	9.25	7.50	9.44	7.81	9.56
	400	n/a	n/a	4.81	7.88	5.75	8.38	6.44	8.75	6.94	9.00	7.31	9.25	7.63	9.38
	500	n/a	n/a	4.44	7.44	5.44	8.00	6.19	8.44	6.69	8.75	7.13	9.25	7.44	9.19

Levels ±0.25" (6 mm)

DISPLACER MODELS WITH 1" PROCESS CONNECTIONS – MILLIMETERS

Model Code	Process Temp. ° C	Liquid Specific Gravity													
		0.40		0.50		0.60		0.70		0.80		0.90		1.00	
		HL	LL	HL	LL	HL	LL	HL	LL	HL	LL	HL	LL	HL	LL
B34	38	33	121	55	127	69	131	80	134	87	136	93	138	98	140
	93	31	119	54	126	69	130	79	133	87	136	93	137	98	139
	149	30	117	53	124	68	129	78	132	86	135	92	137	98	138
C34	38	116	214	146	227	167	235	181	241	191	246	200	249	207	252
	93	106	205	140	219	160	229	176	235	187	241	195	245	203	248
	149	97	194	132	210	154	221	170	229	183	235	191	240	198	243
	205	n/a	n/a	122	200	146	213	164	222	176	229	186	235	194	238
	260	n/a	n/a	113	189	138	203	157	214	170	222	181	229	189	233

Levels ±0.25" (6 mm)

ASME B31.3 ACTUATING LEVELS

For float operated units, minimum specific gravity and actuating levels vary depending upon the material of construction code used with the unit.

For displacer operated units, minimum specific gravity and actuating levels vary depending upon the temperature at which the unit is operated.

NOTE: The minimum specific gravity and actuating levels shown are for single switch units with 1" process connections only.

Minimum specific gravity and levels will change for multistage units and levels will change for units with 1½" or 2" process connections. Consult factory for these changes.

The level decals on the control identify the actuation levels at the corresponding minimum specific gravity.

ASME B31.3 FLANGED CAGE MODELS WITH 1" PROCESS CONNECTIONS

INCHES

Model Code	Models w/Mat. of Const. Code 1			Models w/Mat. of Const. Code 2		
	Min. Sp. Gr.	Actuating Level @ Min. Sp. Gr.		Min. Sp. Gr.	Actuating Level @ Min. Sp. Gr.	
		HL	LL		HL	LL
B35	0.69	3.06	3.62	0.72	3.06	3.79
C35	0.57	3.15	3.86	0.59	3.09	3.96
G35	0.55	3.25	3.83	0.56	3.20	3.90
K35	0.40	3.56	4.06	0.40	3.40	4.02
L35	0.41	3.31	3.98	0.43	3.34	4.14
V35	0.71	3.06	3.81	0.75	3.00	3.64
Z35	0.66	2.94	3.63	0.68	2.90	3.47

Levels ±0.25" (6 mm)

MILLIMETERS

Model Code	Models w/Mat. of Const. Code 1			Models w/Mat. of Const. Code 2		
	Min. Sp. Gr.	Actuating Level @ Min. Sp. Gr.		Min. Sp. Gr.	Actuating Level @ Min. Sp. Gr.	
		HL	LL		HL	LL
B35	0.69	78	92	0.72	78	96
C35	0.57	80	98	0.59	78	101
G35	0.55	82	97	0.56	81	99
K35	0.40	90	103	0.40	86	102
L35	0.41	84	101	0.43	85	105
V35	0.71	78	97	0.75	76	92
Z35	0.66	75	92	0.68	74	88

Levels ±0.25" (6 mm)

ASME B31.3 SEALED CAGE MODELS WITH 1" PROCESS CONNECTIONS

INCHES

Model Code	Head Flg. Lbs.	Models w/Mat. of Const. Code 1			Models w/Mat. of Const. Code 2		
		Min. Sp. Gr.	Actuating Level @ Min. Sp. Gr.		Min. Sp. Gr.	Actuating Level @ Min. Sp. Gr.	
			HL	LL		HL	LL
B3F	150	0.78	3.00	3.87	0.83	2.97	4.05
	300	0.66	2.17	2.97	0.68	2.10	3.10
	600	0.66	2.06	3.12	0.71	2.19	2.94
G3F	150	0.41	3.58	4.26	0.43	3.61	4.42
	300	0.55	3.52	4.10	0.56	3.47	4.18
	600	0.70	4.00	4.81	0.76	4.13	4.75
K3F	150	0.33	3.08	3.64	0.33	2.97	3.65
	300	0.40	3.05	3.56	0.40	2.96	3.57
	600	0.60	3.30	3.85	0.62	3.44	3.88
Z3F	600	0.67	3.10	3.80	0.70	3.12	3.68
	900	0.67	3.10	3.80	0.70	3.12	3.68

Levels ±0.25" (6 mm)

MILLIMETERS

Model Code	Head Flg. Lbs.	Models w/Mat. of Const. Code 1			Models w/Mat. of Const. Code 2		
		Min. Sp. Gr.	Actuating Level @ Min. Sp. Gr.		Min. Sp. Gr.	Actuating Level @ Min. Sp. Gr.	
			HL	LL		HL	LL
B3F	150	0.78	76	98	0.83	75	103
	300	0.66	55	75	0.68	53	79
	600	0.66	52	79	0.71	56	75
G3F	150	0.41	91	108	0.43	92	112
	300	0.55	89	104	0.56	88	106
	600	0.70	102	122	0.76	105	121
K3F	150	0.33	78	92	0.33	75	93
	300	0.40	77	90	0.40	75	91
	600	0.60	84	98	0.62	87	99
Z3F	600	0.67	79	97	0.70	79	93
	900	0.67	79	97	0.70	79	93

Levels ±0.25" (6 mm)

DIMENSIONAL SPECIFICATIONS

INCHES (MM)

ASME B31.1 & B31.3 SEALED CAGE MODELS

All housings rotatable 360°.

Allow 8 inches (203 mm) overhead clearance for cover removal.

Outline Dimensions	L	M
Aluminum	4.29 (108)	5.93 (151)
Carbon Steel (pneumatic)	5.00 (127)	4.62 (117)

Conduit Connections K
Electrical Switches: 1" NPT Pneumatic Switches: ¼" NPT

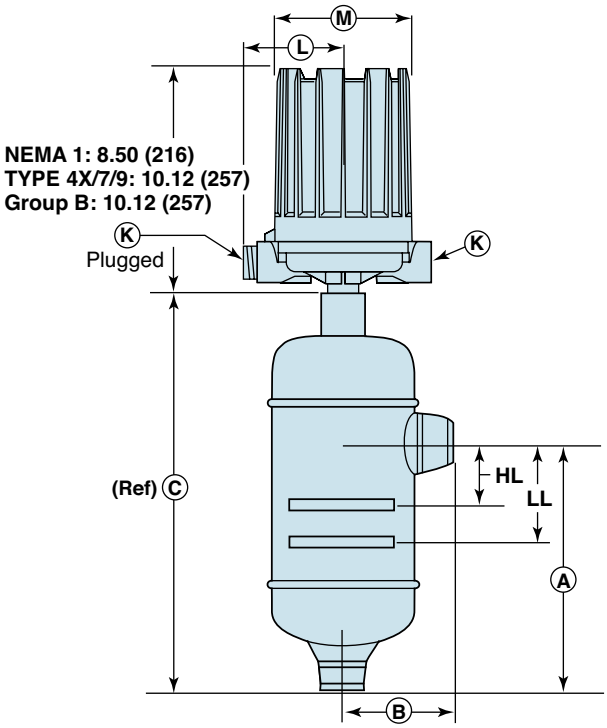

Threaded and Socket Weld
Upper Side/Bottom

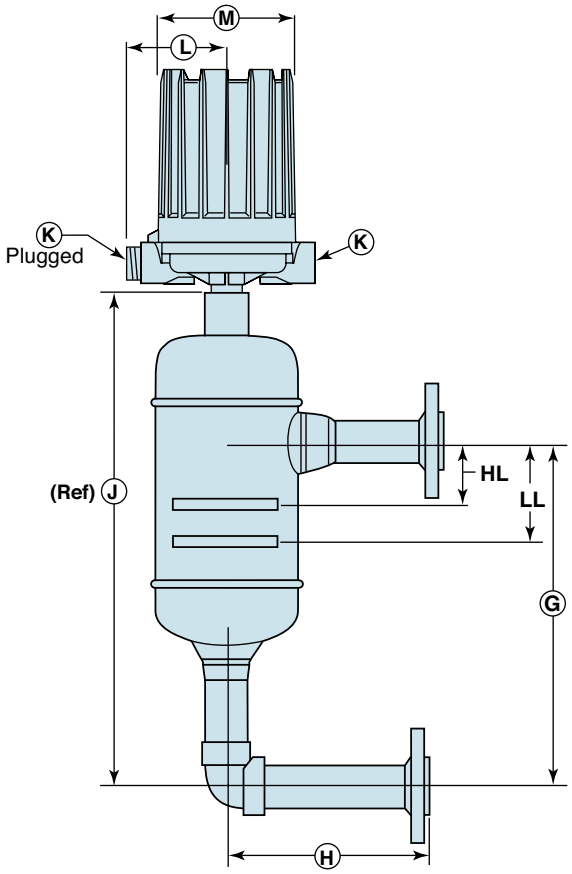

Flanged Side/Side

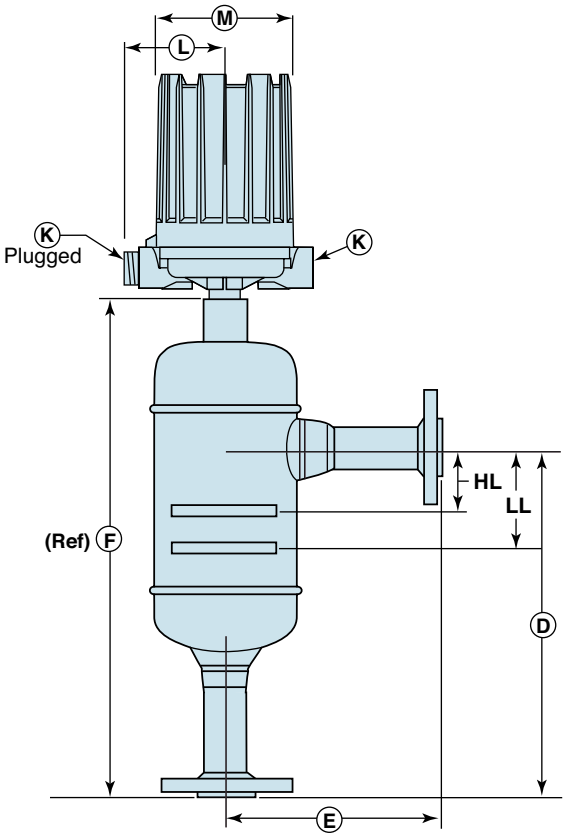

Flanged
Upper Side/Bottom

DIMENSIONAL SPECIFICATIONS

SEALED CAGE MODELS — ASME B31.1 150# & 300# ANSI PRESSURE RATINGS
ASME B31.3 ALL PRESSURE RATINGS

CHAMBERS WITH 1-INCH CONNECTIONS

INCHES

Model Code	1" NPT Threaded & Socket Weld			1" Flanged Upper Side/Bottom					1" Flanged Side/Side				
	A	B	C	D		E	F		G		H	J	
				Std.	14"		Std.	14"	Std.	14"		Std.	14"
B34	8.76	3.63	13.84	12.87	—	6.38	17.95	—	13.62	—	6.38	18.70	—
B35	8.92	4.15	15.12	11.56	14.00	6.69	17.76	20.20	12.21	14.00	6.69	18.41	20.20
C35	8.92	4.15	15.12	11.56	14.00	6.69	17.76	20.20	12.21	14.00	6.69	18.41	20.20
G35	9.80	4.69	16.17	12.31	14.00	7.19	18.68	20.36	12.96	14.00	7.19	19.33	20.36
L35	9.80	4.69	16.17	12.31	14.00	7.19	18.68	20.36	12.96	14.00	7.19	19.33	20.36
V35	8.92	4.15	15.12	11.56	14.00	6.68	17.76	20.20	12.21	14.00	6.68	18.41	20.20
Z35	9.80	4.69	16.17	12.31	14.00	7.19	18.68	20.36	12.96	14.00	7.19	19.33	20.36
	A	B	C	D		E	F		G		H	J	
				Std.	16"		Std.	16"	Std.	14"		Std.	16"
K35	12.04	5.68	18.92	14.56	16.00	8.19	21.45	22.89	15.21	16.00	8.19	22.10	22.89

MILLIMETERS

Model Code	1" NPT Thread & Socket Weld			1" Flanged Upper Side/ Bottom					1" Flanged Side/Side				
	A	B	C	D		E	F		G		H	J	
				Std.	14"		Std.	14"	Std.	14"		Std.	14"
B34	223	92	352	327	—	162	459	—	346	—	162	478	—
B35	227	105	384	294	356	170	451	513	310	356	170	468	513
C35	227	105	384	294	356	170	451	513	310	356	170	468	513
G35	249	119	410	313	356	183	474	517	329	356	183	490	517
L35	249	119	410	313	356	183	474	517	329	356	183	490	517
V35	227	105	384	294	356	170	451	513	310	356	170	468	513
Z35	249	119	411	313	356	183	475	517	329	356	183	491	517
	A	B	C	D		E	F		G		H	J	
				Std.	16"		Std.	16"	Std.	16"		Std.	16"
K35	306	144	481	370	406	208	545	581	386	406	208	561	581

CHAMBERS WITH 1½ -INCH CONNECTIONS

INCHES

Model Code	1 ½" NPT Thread-ed & Socket Weld			1 ½" Flanged Upper Side/Bottom					1 ½" Flanged Side/Side				
	A	B	C	D		E	F		G		H	J	
				Std.	14"		Std.	14"	Std.	14"		Std.	14"
B34	Not Available												
B35	8.92	4.22	15.12	12.56	14.00	7.69	18.76	20.20	13.21	14.00	7.69	19.41	20.20
C35	8.92	4.22	15.12	12.56	14.00	7.69	18.76	20.20	13.21	14.00	7.69	19.41	20.20
G35	9.80	4.75	16.17	13.31	14.00	8.19	19.68	20.36	13.96	14.00	8.19	20.33	20.36
L35	9.80	4.75	16.17	13.31	14.00	8.19	19.68	20.36	13.96	14.00	8.19	20.33	20.36
V35	8.92	4.22	15.12	12.56	14.00	7.69	18.76	20.20	13.21	14.00	7.69	19.41	20.20
Z35	9.80	4.75	16.17	13.31	14.00	8.19	19.68	20.36	13.96	14.00	8.19	20.33	20.36
	A	B	C	D		E	F				H		
				Std.	16"		Std.	16"	Std.	14"		Std.	16"
K35	12.04	5.75	18.92	15.56	16.00	9.19	22.45	22.89	16.21	16.00	9.19	23.10	22.89

MILLIMETERS

Model Code	1 ½" NPT Thread & Socket Weld			1 ½" Flanged Upper Side/ Bottom					1 ½" Flanged Side/Side				
	A	B	C	D		E	F		G		H	J	
				Std.	14"		Std.	14"	Std.	14"		Std.	14"
B34	Not Available												
B35	227	107	384	319	356	195	477	513	336	356	195	493	513
C35	227	107	384	319	356	195	477	513	336	356	195	493	513
G35	249	121	411	338	356	208	500	517	355	356	208	516	517
L35	249	121	411	338	356	208	500	517	355	356	208	516	517
V35	227	107	384	319	356	195	477	513	336	356	195	493	513
Z35	249	121	411	338	356	208	500	513	355	356	208	517	517
	A	B	C	D		E	F		G		H	J	
				Std.	16"		Std.	16"	Std.	16"		Std.	16"
K35	306	146	481	395	406	233	570	581	412	406	233	587	581

CHAMBERS WITH 2-INCH CONNECTIONS

INCHES

Model Code	2" NPT Threaded & Socket Weld			2" Flanged Upper Side/Bottom					2" Flanged Side/Side				
	A	B	C	D		E	F		G		H	J	
				Std.	14"		Std.	14"	Std.	14"		Std.	14"
B34	Not Available												
B35	8.92	4.34	15.12	12.56	14.00	7.69	18.76	20.20	13.21	14.00	7.69	19.41	20.20
C35	8.92	4.34	15.12	12.56	14.00	7.69	18.76	20.20	13.21	14.00	7.69	19.41	20.20
G35	9.80	4.88	16.17	13.31	14.00	8.19	19.68	20.36	13.96	14.00	8.19	20.33	20.36
L35	9.80	4.88	16.17	13.31	14.00	8.19	19.68	20.36	13.96	14.00	8.19	20.33	20.36
V35	8.92	4.34	15.12	12.56	14.00	7.69	18.76	20.20	13.21	14.00	7.69	19.41	20.20
Z35	9.80	4.88	16.17	13.31	14.00	8.19	19.68	20.36	13.96	14.00	8.19	20.33	20.36
	A	B	C	D		E	F				H		
				Std.	16"		Std.	16"	Std.	14"		Std.	16"
K35	12.04	5.75	18.92	15.56	16.00	9.19	22.45	22.89	16.21	16.00	9.19	23.10	22.89

MILLIMETERS

2" NPT Thread & Socket Weld			2" Flanged Upper Side/ Bottom					2" Flanged Side/Side				
A	B	C	D		E	F		G		H	J	
			Std.	14"		Std.	14"	Std.	14"		Std.	14"
227	110	384	319	356	195	477	513	336	356	195	493	513
227	110	384	319	356	195	477	513	336	356	195	493	513
249	124	411	338	356	208	500	517	355	356	208	516	517
249	124	411	338	356	208	500	517	355	356	208	516	517
227	110	384	319	356	195	477	513	336	356	195	493	513
249	124	411	338	356	208	500	513	355	356	208	517	517
A	B	C	D		E	F		G		H	J	
			Std.	16"		Std.	16"	Std.	16"		Std.	16"
306	146	481	395	406	233	570	581	412	406	233	587	581

DIMENSIONAL SPECIFICATIONS

INCHES (MM)

ASME B31.1 & B31.3 SEALED CAGE MODELS

All housings rotatable 360°.

Allow 8 inches (203 mm) overhead clearance for cover removal.

Outline Dimensions	L	M
Aluminum	4.29 (108)	5.93 (151)
Carbon Steel (pneumatic)	5.00 (127)	4.62 (117)

Conduit Connections K
Electrical Switches: 1" NPT
Pneumatic Switches: ¼" NPT

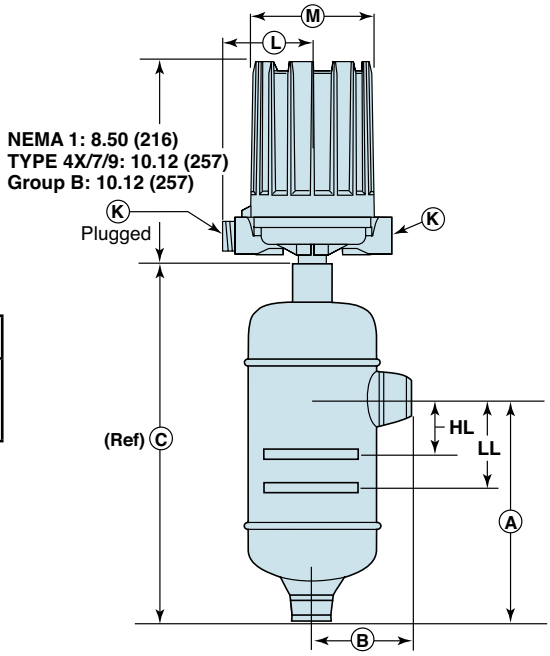

Threaded and Socket Weld
Upper Side/Bottom

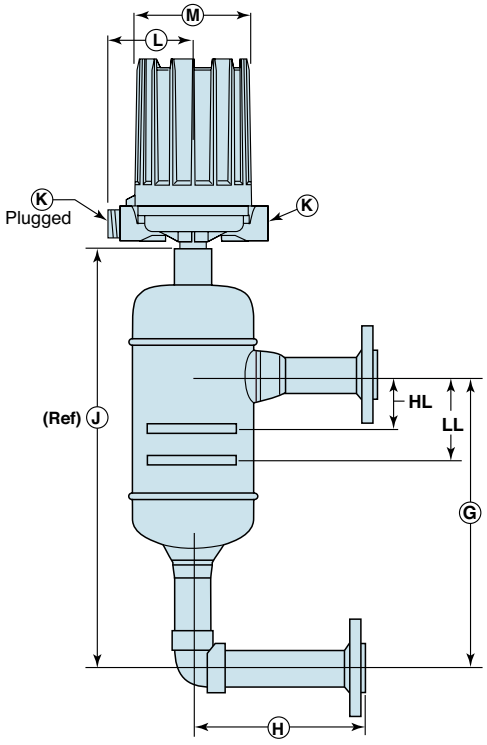

Flanged Side/Side

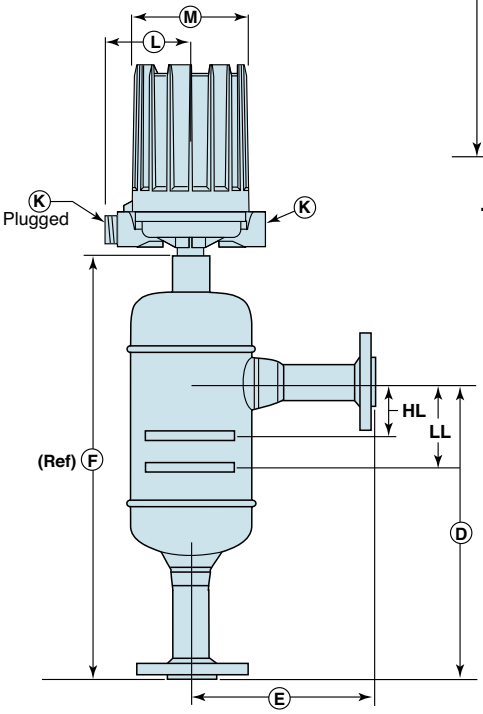

Flanged
Upper Side/Bottom

DIMENSIONAL SPECIFICATIONS

ASME B31.1 SEALED CAGE MODELS — 600# & 900# ANSI PRESSURE RATINGS

CHAMBERS WITH 1-INCH CONNECTIONS — 600 & 900 LB. ANSI CLASS

INCHES

Model Code	1" NPT Threaded & Socket Weld			1" Flanged Upper Side/Bottom					1" Flanged Side/Side				
	A	B	C	D		E	F		G		H	J	
				14"	16"		14"	16"	14"	16"		14"	16"
B35	8.92	4.15	15.12	14.00	—	9.00	20.20	—	14.00	—	9.00	20.20	—
C35	8.92	4.15	15.12	14.00	—	9.00	20.20	—	14.00	—	9.00	20.20	—
G35	9.80	4.69	16.17	—	16.00	10.00	—	22.36	—	16.00	10.00	—	22.36
V35	8.92	4.15	15.12	14.00	—	9.00	20.20	—	14.00	—	9.00	20.20	—
Z35	9.80	4.69	16.17	—	16.00	10.00	—	22.36	—	16.00	10.00	—	22.36

MILLIMETERS

Model Code	1" NPT Thread & Socket Weld			1" Flanged Upper Side/ Bottom					1" Flanged Side/Side				
	A	B	C	D		E	F		G		H	J	
				14"	16"		14"	16"	14"	16"		14"	16"
B35	227	105	384	356	—	229	513	—	356	—	229	513	—
C35	227	105	384	356	—	229	513	—	356	—	229	513	—
G35	249	119	410	—	406	254	—	568	—	406	254	—	568
V35	227	105	384	356	—	229	513	—	356	—	229	513	—
Z35	249	119	410	—	406	254	—	568	—	406	254	—	568

CHAMBERS WITH 1½ -INCH CONNECTIONS — 600 & 900 LB. ANSI CLASS

INCHES

Model Code	1½" NPT Threaded & Socket Weld			1½" Flanged Upper Side/ Bottom					1½" Flanged Side/Side				
	A	B	C	D		E	F		G		H	J	
				14"	16"		14"	16"	14"	16"		14"	16"
B35	8.92	4.22	15.12	14.00	—	9.00	20.20	—	14.00	—	9.00	20.20	—
C35	8.92	4.22	15.12	14.00	—	9.00	20.20	—	14.00	—	9.00	20.20	—
G35	9.80	4.75	16.17	—	16.00	10.00	—	22.36	—	16.00	10.00	—	22.36
V35	8.92	4.22	15.12	14.00	—	9.00	20.20	—	14.00	—	9.00	20.20	—
Z35	9.80	4.75	16.17	—	16.00	10.00	—	22.36	—	16.00	10.00	—	22.36

MILLIMETERS

Model Code	1½" NPT Thread & Socket Weld			1½" Flanged Upper Side/ Bottom					1½" Flanged Side/Side				
	A	B	C	D		E	F		G		H	J	
				14"	16"		14"	16"	14"	16"		14"	16"
B35	227	107	384	356	—	229	513	—	356	—	229	513	—
C35	227	107	384	356	—	229	513	—	356	—	229	513	—
G35	249	121	410	—	406	254	—	568	—	406	254	—	568
V35	227	107	384	356	—	229	513	—	356	—	229	513	—
Z35	249	121	410	—	406	254	—	568	—	406	254	—	568

CHAMBERS WITH 2-INCH CONNECTIONS — 600 & 900 LB. ANSI CLASS

INCHES

Model Code	2" NPT Threaded & Socket Weld			2" Flanged Upper Side/Bottom					2" Flanged Side/Side				
	A	B	C	D		E	F		G		H	J	
				14"	16"		14"	16"	14"	16"		14"	16"
B35	8.92	4.34	15.12	14.00	—	9.00	20.20	—	14.00	—	9.00	20.20	—
C35	8.92	4.34	15.12	14.00	—	9.00	20.20	—	14.00	—	9.00	20.20	—
G35	9.80	4.88	16.17	—	16.00	10.00	—	22.36	—	16.00	10.00	—	22.36
V35	8.92	4.34	15.12	14.00	—	10.00	20.20	—	14.00	—	10.00	20.20	—
Z35	9.80	4.88	16.17	—	16.00	10.00	—	22.36	—	16.00	10.00	—	22.36

MILLIMETERS

Model Code	2" NPT Thread & Socket Weld			2" Flanged Upper Side/ Bottom					2" Flanged Side/Side				
	A	B	C	D		E	F		G		H	J	
				14"	16"		14"	16"	14"	16"		14"	16"
B35	227	110	384	356	—	229	513	—	356	—	229	513	—
C35	227	110	384	356	—	229	513	—	356	—	229	513	—
G35	249	124	410	—	406	254	—	568	—	406	254	—	568
V35	227	110	384	356	—	254	513	—	356	—	254	513	—
Z35	249	124	410	—	406	254	—	568	—	406	254	—	568

DIMENSIONAL SPECIFICATIONS

INCHES (MM)

ASME B31.1 & B31.3 FLANGED CAGE MODELS

All housings rotatable 360°.

Allow 8 inches (203 mm) overhead clearance for cover removal.

Conduit Connections K
Electrical Switches: 1" NPT Pneumatic Switches: ¼" NPT

Outline Dimensions	L	M
Aluminum	3.87 (98)	5.93 (151)
Carbon Steel (pneumatic)	5.00 (127)	4.62 (117)

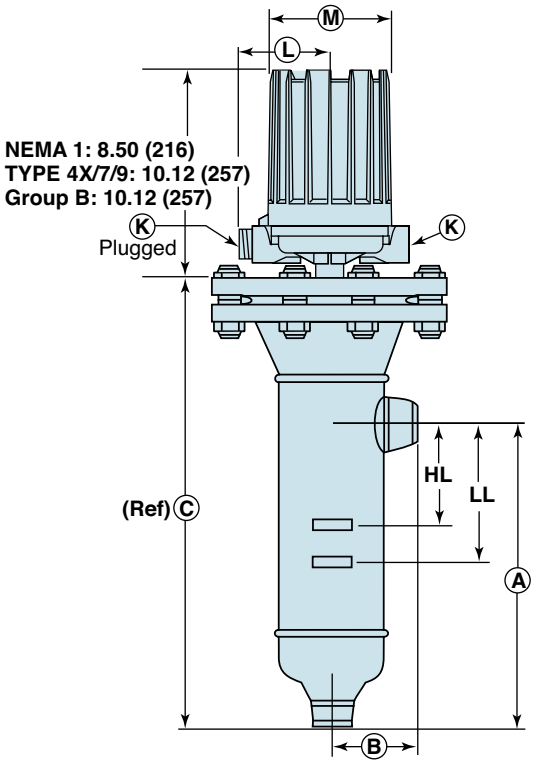

Threaded and Socket Weld Upper Side/Bottom

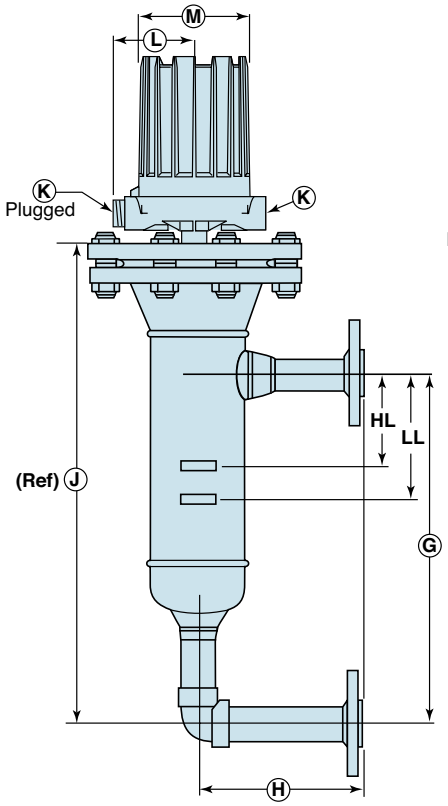

Flanged Side/Side

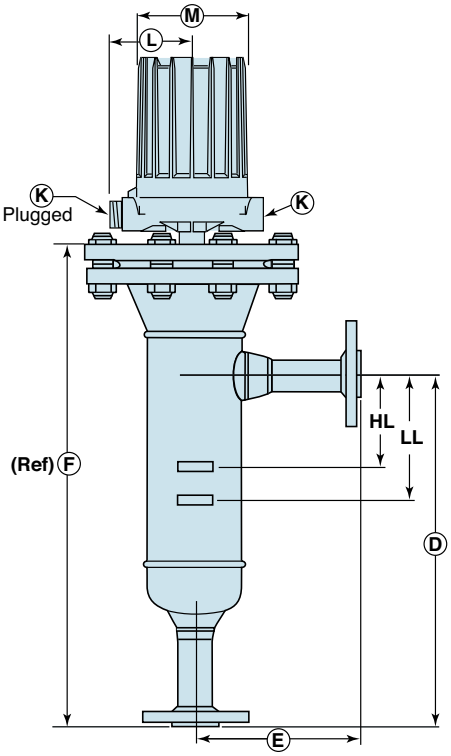

Flanged Upper Side/Bottom

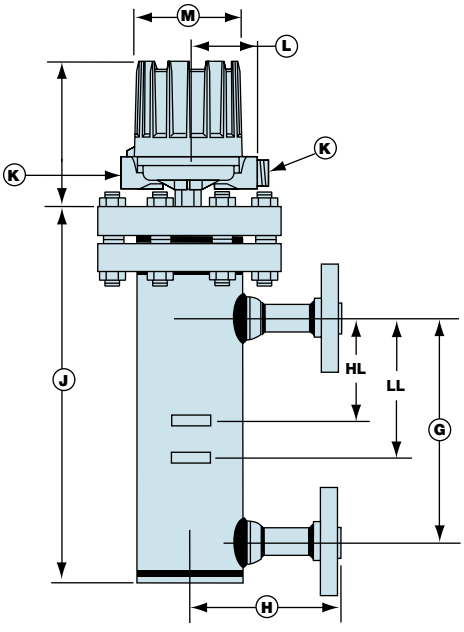

Flanged Top Chamber Side/Side Flange Connections (C34 only)

DIMENSIONAL SPECIFICATIONS

FLANGED CAGE MODELS — ASME B31.1 150# & 300# ANSI PRESSURE RATINGS

ASME B31.3 ALL PRESSURE RATINGS

CHAMBERS WITH 1-INCH CONNECTIONS

INCHES

Model Code	Head Flg. rating (lbs.)	1" NPT Threaded & Socket Weld			1" Flanged Upper Side/Bottom					1" Flanged Side/Side				
		A	B	C	D		E	F		G		H	J	
					Std.	14"		Std.	14"	Std.	14"		Std.	14"
C34	300	15.63	3.13	22.59	18.33	21.68	5.45	25.29	28.64	18.97	14.00	5.45	25.93	28.64
	600	15.63	3.13	22.97	18.33	21.68	5.45	25.66	29.00	18.97	14.00	5.45	26.30	29.00
B3F	150	9.12	3.63	16.64	12.06	14.00	6.13	19.58	21.51	12.71	14.00	6.13	20.23	21.51
	300	9.12	3.63	17.32	12.06	14.00	6.13	20.26	22.19	12.71	14.00	6.13	20.91	22.19
	600	9.12	3.63	18.45	12.06	14.00	6.13	21.39	23.32	12.71	14.00	6.13	22.04	23.32
G3F	150	10.12	4.69	18.30	13.06	14.00	7.19	21.25	22.19	13.71	14.00	7.19	21.89	22.19
	300	10.12	4.69	19.12	13.06	14.00	7.19	22.06	23.00	13.71	14.00	7.19	22.71	23.00
	600	10.12	4.69	20.56	13.06	14.00	7.19	23.50	24.44	13.71	14.00	7.19	24.15	24.43
Z3F	600	10.11	4.68	20.19	13.06	14.00	7.19	23.14	24.08	13.71	14.00	7.19	23.79	24.08
	900	10.11	4.68	21.13	13.06	14.00	7.19	23.14	25.37	13.71	14.00	7.19	23.79	24.08
		A	B	C	D		E	F		G		H	J	
					Std.	16"		Std.	16"	Std.	16"		Std.	16"
K3F	150	11.62	5.69	20.38	14.56	16.00	8.19	23.33	24.77	15.21	16.00	8.19	23.98	24.77
	300	11.62	5.69	21.25	14.56	16.00	8.19	24.20	25.64	15.21	16.00	8.19	24.85	25.64
	600	11.62	5.69	22.93	14.56	16.00	8.19	25.88	27.32	15.21	16.00	8.19	26.53	27.32

MILLIMETERS

Model Code	Head Flg. rating (lbs.)	1" NPT Thread & Socket Weld			1" Flanged Upper Side/ Bottom					1" Flanged Side/Side				
		A	B	C	D		E	F		G		H	J	
					Std.	14"		Std.	14"	Std.	14"		Std.	14"
C34	300	397	80	574	466	551	138	642	727	482	356	138	659	727
	600	397	80	583	466	551	138	351	737	482	356	138	668	737
B3F	150	232	92	423	306	356	156	497	546	323	356	156	514	546
	300	232	92	440	306	356	156	515	564	323	356	156	531	564
	600	232	92	469	306	356	156	543	592	323	356	156	560	592
G3F	150	257	119	465	332	356	183	540	564	348	356	183	556	564
	300	257	119	486	332	356	183	560	584	348	356	183	577	584
	600	257	119	522	332	356	183	597	621	348	356	183	613	621
Z3F	600	257	119	513	332	356	183	588	612	348	356	183	604	612
	900	257	119	537	332	356	183	588	612	348	356	183	604	612
		A	B	C	D		E	F		G		H	J	
					Std.	16"		Std.	16"	Std.	16"		Std.	16"
K3F	150	295	145	518	370	406	208	593	629	386	406	208	609	629
	300	295	145	540	370	406	208	615	651	386	406	208	631	651
	600	295	145	582	370	406	208	657	694	386	406	208	674	694

*See page 19 for ASME B31.1 600# dimensional information.

CHAMBERS WITH 1½ -INCH CONNECTIONS

INCHES

Model Code	Head Flg. rating (lbs.)	1½" NPT Threaded & Socket Weld			1½" Flanged Upper Side/Bottom					1½" Flanged Side/Side				
		A	B	C	D		E	F		G		H	J	
					Std.	14"		Std.	14"	Std.	14"		Std.	14"
C34	300	15.63	3.19	22.59	18.33	21.68	6.19	25.29	28.64	18.97	14.00	6.19	25.93	28.64
	600	15.63	3.19	22.97	18.33	21.68	6.19	25.66	29.00	18.97	14.00	6.19	26.30	29.00
B3F	150	9.12	3.69	16.64	13.06	14.00	7.13	20.58	21.51	13.71	14.00	7.13	21.23	21.51
	300	9.12	3.69	17.32	13.06	14.00	7.13	21.26	22.19	13.71	14.00	7.13	21.91	22.19
	600	9.12	3.69	18.45	13.06	14.00	7.13	22.39	23.32	13.71	14.00	7.13	23.04	23.32
G3F	150	10.12	4.75	18.30	14.06	14.00	8.19	22.25	22.19	14.71	14.00	8.19	22.89	22.19
	300	10.12	4.75	19.12	14.06	14.00	8.19	23.06	23.00	14.71	14.00	8.19	23.71	23.00
	600	10.12	4.75	20.56	14.06	14.00	8.19	24.50	24.44	14.71	14.00	8.19	25.15	24.44
Z3F	600	10.11	4.75	20.19	14.06	14.00	8.18	24.14	24.08	14.71	14.00	8.18	24.79	24.08
	900	10.11	4.75	21.13	14.06	14.00	8.18	24.14	24.08	14.71	14.00	8.18	24.79	24.08
		A	B	C	D		E	F		G		H	J	
					Std.	16"		Std.	16"	Std.	16"		Std.	16"
K3F	150	11.62	5.75	20.38	15.56	16.00	9.19	24.33	24.77	16.21	16.00	9.19	24.98	24.77
	300	11.62	5.75	21.25	15.56	16.00	9.19	25.50	25.64	16.21	16.00	9.19	25.85	25.64
	600	11.62	5.75	22.93	15.56	16.00	9.19	26.88	27.32	16.21	16.00	9.19	27.53	27.32

MILLIMETERS

Model Code	Head Flg. rating (lbs.)	1½" NPT Thread & Socket Weld			1½" Flanged Upper Side/ Bottom					1½" Flanged Side/Side				
		A	B	C	D		E	F		G		H	J	
					Std.	14"		Std.	14"	Std.	14"		Std.	14"
C34	300	397	81	574	466	551	157	642	727	482	356	157	659	727
	600	397	81	583	466	551	157	351	737	482	356	157	668	737
B3F	150	232	94	423	332	356	181	523	546	348	356	181	539	546
	300	232	94	440	332	356	181	540	564	348	356	181	556	564
	600	232	94	469	332	356	181	568	592	348	356	181	585	592
G3F	150	257	121	465	357	356	208	564	563	374	356	208	581	564
	300	257	121	486	357	356	208	586	584	374	356	208	602	584
	600	257	121	522	357	356	208	622	621	374	356	208	639	621
Z3F	600	257	121	513	357	356	208	613	612	374	356	208	630	612
	900	257	121	537	357	356	208	613	612	374	356	208	630	612
		A	B	C	D		E	F		G		H	J	
					Std.	16"		Std.	16"	Std.	16"		Std.	16"
K3F	150	295	146	518	395	406	233	618	629	412	406	233	634	629
	300	295	146	540	395	406	233	648	651	412	406	233	657	651
	600	295	146	582	395	406	233	683	694	412	406	233	699	694

*See page 19 for ASME B31.1 600# dimensional information.

CHAMBERS WITH 2-INCH CONNECTIONS

INCHES

Model Code	Head Flg. rating (lbs.)	2" NPT Threaded & Socket Weld			2" Flanged Upper Side/Bottom					2" Flanged Side/Side				
		A	B	C	D		E	F		G		H	J	
					Std.	14"		Std.	14"	Std.	14"		Std.	14"
C34	300	15.63	3.31	22.59	18.33	21.68	6.25	25.29	28.64	18.97	14.00	6.25	25.93	28.64
	600	15.63	3.31	22.97	18.33	21.68	6.25	25.66	29.00	18.97	14.00	6.25	26.30	29.00
B3F	150	9.12	3.81	16.64	13.06	14.00	7.13	20.58	21.51	13.71	14.00	7.13	21.23	21.51
	300	9.12	3.81	17.32	13.06	14.00	7.13	21.26	22.19	13.71	14.00	7.13	21.91	22.19
	600	9.12	3.81	18.45	13.06	14.00	7.13	22.39	23.32	13.71	14.00	7.13	23.04	23.32
G3F	150	10.12	4.88	18.30	14.06	14.00	8.19	22.25	22.19	14.71	14.00	8.19	22.89	22.19
	300	10.12	4.88	19.12	14.06	14.00	8.19	23.06	23.00	14.71	14.00	8.19	23.71	23.00
	600	10.12	4.88	20.56	14.06	14.00	8.19	24.50	24.44	14.71	14.00	8.19	25.15	24.44
Z3F	600	10.11	4.87	20.19	14.06	14.00	8.18	24.14	24.08	14.71	14.00	8.18	24.79	24.08
	900	10.11	4.87	21.13	14.06	14.00	8.18	24.14	24.08	14.71	14.00	8.18	24.79	24.08
		A	B	C	D		E	F		G		H	J	
					Std.	16"		Std.	16"	Std.	16"		Std.	16"
K3F	150	11.62	5.88	20.38	15.56	16.00	9.19	24.33	24.77	16.21	16.00	9.19	24.98	24.77
	300	11.62	5.88	21.25	15.56	16.00	9.19	25.50	25.64	16.21	16.00	9.19	25.85	25.64
	600	11.62	5.88	22.93	15.56	16.00	9.19	26.88	27.32	16.21	16.00	9.19	27.53	27.32

MILLIMETERS

Model Code	Head Flg. rating (lbs.)	2" NPT Thread & Socket Weld			2" Flanged Upper Side/ Bottom					2" Flanged Side/Side				
		A	B	C	D		E	F		G		H	J	
					Std.	14"		Std.	14"	Std.	14"		Std.	14"
C34	300	397	84	574	466	551	159	642	727	482	356	159	659	727
	600	397	84	583	466	551	159	351	737	482	356	159	668	737
B3F	150	232	97	423	332	356	181	523	546	348	356	181	539	546
	300	232	97	440	332	356	181	540	564	348	356	181	556	564
	600	232	97	469	332	356	181	569	592	348	356	181	585	592
G3F	150	257	124	465	357	356	208	565	564	374	356	208	581	564
	300	257	124	486	357	356	208	586	584	374	356	208	602	584
	600	257	124	522	357	356	208	622	621	374	356	208	639	621
Z3F	600	257	124	513	357	356	208	613	612	374	356	208	630	612
	900	257	124	537	357	356	208	613	612	374	356	208	630	612
		A	B	C	D		E	F		G		H	J	
					Std.	16"		Std.	16"	Std.	16"		Std.	16"
K3F	150	295	149	518	395	406	233	618	629	412	406	233	634	629
	300	295	149	540	395	406	233	648	651	412	406	233	657	651
	600	295	149	582	395	406	233	683	694	412	406	233	699	694

*See page 19 for ASME B31.1 600# dimensional information.

DIMENSIONAL SPECIFICATIONS

INCHES (MM)

ASME B31.1 & B31.3 FLANGED CAGE MODELS

All housings rotatable 360°.

Allow 8 inches (203 mm) overhead clearance for cover removal.

Conduit Connections K
Electrical Switches: 1" NPT Pneumatic Switches: ¼" NPT

Outline Dimensions	L	M
Aluminum	3.87 (98)	5.93 (151)
Carbon Steel (pneumatic)	5.00 (127)	4.62 (117)

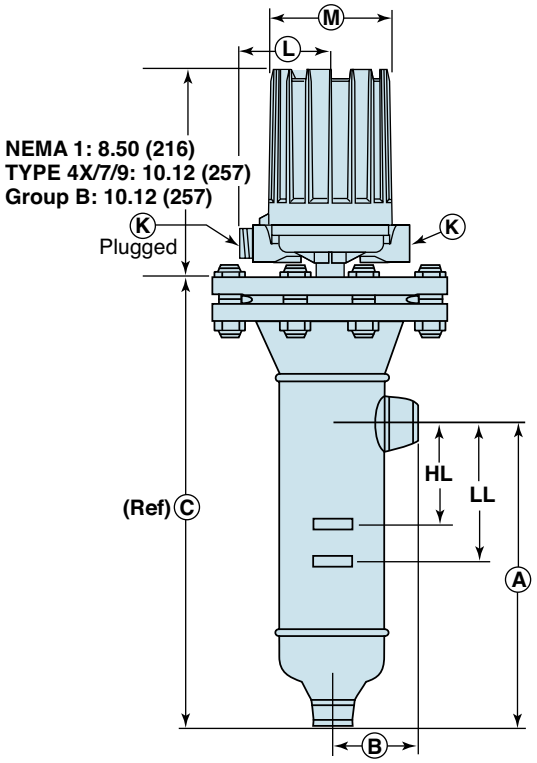

Threaded and Socket Weld Upper Side/Bottom

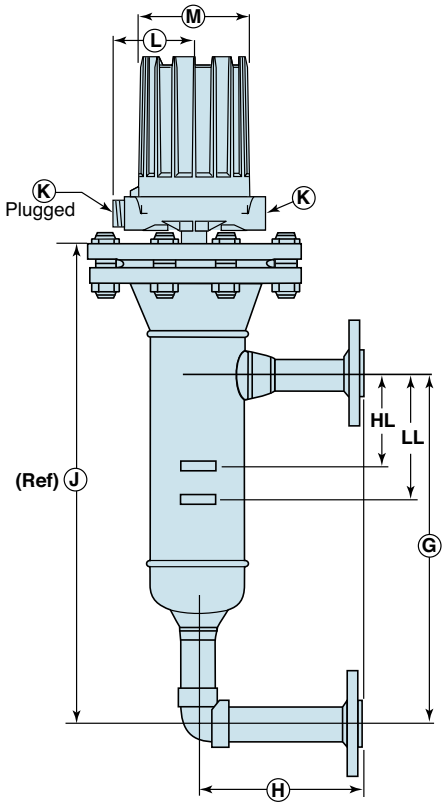

Flanged Side/Side

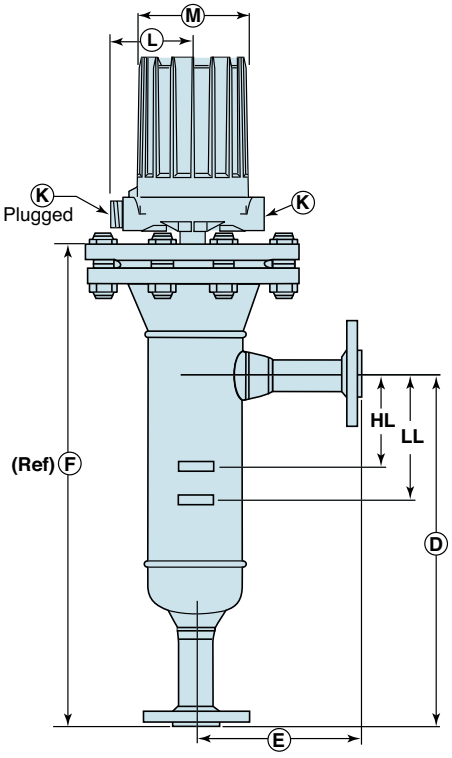

Flanged Upper Side/Bottom

DIMENSIONAL SPECIFICATIONS

FLANGED CAGE MODELS — ASME B31.1 600# & 900# ANSI PRESSURE RATING

CHAMBERS WITH 1-INCH CONNECTIONS

INCHES

Model Code	Flg. Size (lbs.)	1" NPT Threaded & Socket Weld			1" Flanged Upper Side/Bottom					1" Flanged Side/Side				
		A	B	C	D		E	F		G		H	J	
					Std.	14"		Std.	14"	Std.	14"		Std.	14"
B3F	600	9.12	3.63	18.39	—	14.00	9.00	—	23.32	—	14.00	9.00	—	23.32
		A	B	C	D		E	F		G		H	J	
					Std.	16"		Std.	16"	Std.	16"		Std.	16"
G3F	600	10.12	4.69	20.51	—	16.00	10.00	—	26.44	—	16.00	10.00	—	26.43
Z3F	600	10.11	4.68	20.19	—	16.00	10.00	—	26.08	—	16.00	10.00	—	26.08
	900	10.11	4.68	21.13	—	16.00	10.00	—	26.08	—	16.00	10.00	—	26.08
		A	B	C	D		E	F		G		H	J	
					Std.	18"		Std.	18"	Std.	18"		Std.	18"
K3F	600	11.62	5.69	22.89	—	18.00	11.00	—	29.32	—	18.00	11.00	—	29.32

MILLIMETERS

Model Code	1" NPT Thread & Socket Weld			1" Flanged Upper Side/ Bottom					1" Flanged Side/Side				
	A	B	C	D		E	F		G		H	J	
				Std.	14"		Std.	14"	Std.	14"		Std.	14"
B3F	232	92	467	—	356	229	—	592	—	356	229	—	592
	A	B	C	D		E	F		G		H	J	
				Std.	16"		Std.	16"	Std.	16"		Std.	16"
G3F	257	119	521	—	406	254	—	672	—	406	254	—	671
Z3F	257	119	513	—	406	254	—	662	—	406	254	—	662
	257	119	537	—	406	254	—	662	—	406	254	—	662
	A	B	C	D		E	F		G		H	J	
				Std.	18"		Std.	18"	Std.	18"		Std.	18"
K3F	295	145	581	—	457	279	—	745	—	457	279	—	745

CHAMBERS WITH 1½ -INCH CONNECTIONS

INCHES

Model Code	Flg. Size (lbs.)	1½" NPT Threaded & Socket Weld			1½" Flanged Upper Side/Bottom					1½" Flanged Side/Side				
		A	B	C	D		E	F		G		H	J	
					Std.	14"		Std.	14"	Std.	14"		Std.	14"
B3F	600	9.12	3.69	18.39	—	14.00	9.00	—	23.32	—	14.00	9.00	—	23.32
		A	B	C	D		E	F		G		H	J	
					Std.	16"		Std.	16"	Std.	16"		Std.	16"
G3F	600	10.12	4.75	20.51	—	16.00	10.00	—	26.44	—	16.00	10.00	—	26.43
Z3F	600	10.11	4.75	20.19	—	16.00	10.00	—	26.08	—	16.00	10.00	—	26.08
	900	10.11	4.75	21.13	—	16.00	10.00	—	26.08	—	16.00	10.00	—	26.08
		A	B	C	D		E	F		G		H	J	
					Std.	18"		Std.	18"	Std.	18"		Std.	18"
K3F	600	11.62	5.69	22.89	—	18.00	11.00	—	29.32	—	18.00	11.00	—	29.32

MILLIMETERS

Model Code	1½" NPT Thread & Socket Weld			1½" Flanged Upper Side/ Bottom					1½" Flanged Side/Side				
	A	B	C	D		E	F		G		H	J	
				Std.	14"		Std.	14"	Std.	14"		Std.	14"
B3F	232	94	467	—	356	229	—	592	—	356	229	—	592
	A	B	C	D		E	F		G		H	J	
				Std.	16"		Std.	16"	Std.	16"		Std.	16"
G3F	257	121	521	—	406	254	—	672	—	406	254	—	671
Z3F	257	121	513	—	406	254	—	662	—	406	254	—	662
	257	121	537	—	406	254	—	662	—	406	254	—	662
	A	B	C	D		E	F		G		H	J	
				Std.	18"		Std.	18"	Std.	18"		Std.	18"
K3F	295	146	581	—	457	279	—	745	—	457	279	—	745

CHAMBERS WITH 2-INCH CONNECTIONS

INCHES

Model Code	Flg. Size (lbs.)	2" NPT Threaded & Socket Weld			2" Flanged Upper Side/Bottom					2" Flanged Side/Side				
		A	B	C	D		E	F		G		H	J	
					Std.	14"		Std.	14"	Std.	14"		Std.	14"
B3F	600	9.12	3.81	18.39	—	14.00	9.00	—	23.32	—	14.00	9.00	—	23.32
		A	B	C	D		E	F		G		H	J	
					Std.	16"		Std.	16"	Std.	16"		Std.	16"
G3F	600	10.12	4.88	20.51	—	16.00	10.00	—	26.44	—	16.00	10.00	—	26.43
Z3F	600	10.11	4.87	20.19	—	16.00	10.00	—	26.08	—	16.00	10.00	—	26.08
	900	10.11	4.87	21.13	—	16.00	10.00	—	26.08	—	16.00	10.00	—	26.08
		A	B	C	D		E	F		G		H	J	
					Std.	18"		Std.	18"	Std.	18"		Std.	18"
K3F	600	11.62	5.88	22.89	—	18.00	11.00	—	29.32	—	18.00	11.00	—	29.32

MILLIMETERS

Model Code	2" NPT Thread & Socket Weld			2" Flanged Upper Side/Bottom					2" Flanged Side/Side				
	A	B	C	D		E	F		G		H	J	
				Std.	14"		Std.	14"	Std.	14"		Std.	14"
B3F	232	97	467	—	356	229	—	592	—	356	229	—	592
	A	B	C	D		E	F		G		H	J	
				Std.	16"		Std.	16"	Std.	16"		Std.	16"
G3F	257	124	521	—	406	254	—	672	—	406	254	—	671
Z3F	257	124	513	—	406	254	—	662	—	406	254	—	662
	257	124	537	—	406	254	—	662	—	406	254	—	662
	A	B	C	D		E	F		G		H	J	
				Std.	18"		Std.	18"	Std.	18"		Std.	18"
K3F	295	149	581	—	457	279	—	745	—	457	279	—	745

ASME B31.1 MODEL NUMBERS

SEALED CAGE MODELS

MODEL NUMBER CODE

Model Code ①	Minimum Specific Gravity ②	Pressure Rating							
		psig @ °F				bar @ °C			
		100	550	750	800	38	228	339	427
B35	0.69	1000	875	805	783	68.9	60.3	55.5	54.0
C35	0.57	500	438	403	398	34.5	30.2	27.8	27.4
G35	0.54	750	656	604	596	51.7	45.2	41.6	41.1
V35 ③	0.71	2116	1913	1609	1337	145.9	131.9	110.9	92.2
Z35 ③	0.66	2044	1913	1554	1291	140.9	131.9	107.1	89.0

MATERIALS OF CONSTRUCTION

P	Carbon steel chamber, 316L stainless steel float, 400 series stainless steel sleeve, ASME B31.1 Construction
7	P22/F22 Chrome-Moly chamber, 347 SS float, 400 series SS sleeve, ASME B31.1 Construction, model B35 only

SEALED CAGE SIZE AND TANK CONNECTION TYPE

Type	C/C	Connection Size											
		1"				1½"				2"			
Threaded	Std.	B20				C20				D20			
Socket Weld	Std.	B30				C30				D30			
		Cage Mounting ANSI Flange Rating (lbs.)											
		150	300	600	900	150	300	600	900	150	300	600	900
Flanged Upper Side/ Bottom	Std.	N30	N40	—	—	P30	P40	—	—	Q30	Q40	—	—
	14"	N34	N44	N54	N64	P34	P44	P54	P64	Q34	Q44	Q54	Q64
	16"④	—	—	N56	N66	—	—	P56	P66	—	—	Q56	Q66
Flanged Side/Side	Std.	S30	S40	—	—	T30	T40	—	—	V30	V40	—	—
	14"	S34	S44	S54	S64	T34	T44	T54	T64	V34	V44	V54	V64
	16"④	—	—	S56	S66	—	—	T56	T66	—	—	V56	V66

PNEUMATIC SWITCH MECHANISM AND ENCLOSURE

Switch Description	Maximum Supply Pressure		Maximum Process Temperature		Bleed Orifice Diameter		Models B35, C35, & G35	Models V35 & Z35
	psig	bar	°F	°C	inches	mm	NEMA 1	NEMA 1
Series J Bleed Type	100	7	400	204	.063	1.6	JGH	JGF
	60	4	400	204	.094	2.3	JHH	JHF
	60	4	700	371	.055	1.3	JJH	JJF
Series K Non-Bleed	100	7	400	204	—	—	—	KOF
	40	3	400	204	—	—	KOH	—

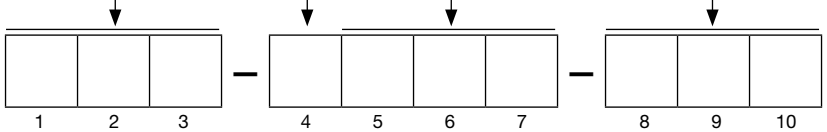

① Models are limited to maximum temperature rating of selected switch mechanism.

② Minimum specific gravity ratings apply to single stage units only. Consult factory for two or three stage units.

③ Models V35 and Z35 contain 17–7 ph stainless steel floats.

④ Codes for a 16-inch center to center dimension are applicable to Models G35 with 600# flanges and Z35 with 600 & 900# flanges only.

ELECTRIC SWITCH MECHANISM AND ENCLOSURE

Switch Description	Process ⑤ ⑥ Temperature Range °F (°C)	Contacts	Set Points	Models B35, C35 & G35			Models V35 & Z35		
				Aluminum Enclosure					
				FM (US/CA) Groups C&D 1" NPT	FM (US/CA) Group B 1" NPT	ATEX / IECEx 1" NPT	FM (US/CA) Groups C&D 1" NPT	FM (US/CA) Group B 1" NPT	ATEX / IECEx 1" NPT
Series B Snap Switch	-40 to +250 (-40 to +121)	SPDT	1	BKA	BKJ	BCC	BKB	BKK	BC9
			2	BLA	BLJ	BDC	BLB	BLK	BD9
			3	BMA	BMJ	BEC	BMB	BMK	BE9
		DPDT	1	BNA	BNJ	BFC	BNB	BNK	BF9
			2	BOA	BOJ	BGC	BOB	BOK	BG9
Series C Snap Switch	-40 to +450 (-40 to +232)	SPDT	1	CKA	CKJ	CCC	CKB	CKK	CC9
			2	CLA	CLJ	CDC	CLB	CLK	CD9
			3	CMA	CMJ	CEC	CMB	CMK	CE9
		DPDT	1	CNA	CNJ	CFC	CNB	CNK	CF9
			2	COA	COJ	CGC	COB	COK	CG9
Series D DC Current Snap Switch	-40 to +250 (-40 to +121)	SPDT	1	DKB	DKK	DC9	DKB	DKK	DC9
			2	DLB	DLK	DD9	DLB	DLK	DD9
			3	DMB	DMK	DE9	DMB	DMK	DE9
		DPDT	1	DNB	DNK	DF9	DNB	DNK	DF9
			2	DOB	DOK	DG9	DOB	DOK	DG9
Series F Hermetically Sealed Snap Switch	-50 to +750 (-46 to +399)	SPDT	1	FKA	FKJ	FCC	FKB	FKK	FC9
			2	FLA	FLJ	FDC	FLB	FLK	FD9
		DPDT	1	FNA	FNJ	FFC	FNB	FNK	FF9
			2	FOA	FOJ	FGC	FOB	FOK	FG9
Series HS Hermetically Sealed 5-amp Snap Switch with Wiring Leads	-50 to +400 (-46 to +204) ⑦	SPDT	1	HMJ	HMK	N/A	HMJ	HMK	N/A
			2	HMN	HMP		HMN	HMP	
		DPDT	1	HMS	HMT		HMS	HMT	
			2	HMY	HMZ		HMY	HMZ	
Series HS Hermetically Sealed 5- amp Snap Switch with Terminal Block	-50 to +400 (-46 to +204) ⑦	SPDT	1	HM3	HM4	HA9	HM3	HM4	HA9
		DPDT	1	HM7	HM8	HB9	HM7	HM8	HB9
Series R High Temperature Snap Switch	-40 to +750 (-40 to +399)	SPDT	1	RKB	RKK	RC9	RKB	RKK	RC9
			2	RLB	RLK	RD9	RLB	RLK	RD9
		DPDT	1	RNB	RNK	RF9	RNB	RNK	RF9
			2	ROB	ROK	RG9	ROB	ROK	RG9
Series 8 Hermetically Sealed Snap Switch	-50 to +750 (-46 to +399)	SPDT	1	8KA	8KJ	8CC	8KB	8KK	8C9
			2	8LA	8LJ	8DC	8LB	8LK	8D9
			3	8MA	8MJ	8EC	8MB	8MK	8E9
		DPDT	1	8NA	8NJ	8FC	8NB	8NK	8F9
			2	8OA	8OJ	8GC	8OB	8OK	8G9
Series 9 High Temperature Hermetically Sealed Snap Switch	-50 to +750 (-46 to +399)	SPDT	1	9KA	9KJ	9CC	9KB	9KK	9C9
			2	9LA	9LJ	9DC	9LB	9LK	9D9
			3	9MA	9MJ	9EC	9MB	9MK	9E9
		DPDT	1	9NA	9NJ	9FC	9NB	9NK	9F9
			2	9OA	9OJ	9GC	9OB	9OK	9G9
Switch Description	**Process Temp. Range °F (°C) ⑤ ⑥**	**Contacts**	**Set Points**	**CS/Aluminum**	**Cast Iron**		**CS/Aluminum**	**Cast Iron**	
				NEMA 4X	**Class I, Div 1 Groups C&D**	**Class I, Div 1 Group B**	**NEMA 4X**	**Class I, Div 1 Groups C&D**	**Class I, Div 1 Group B**
Series R High Temperature Snap Switch	-40 to +1000 (-40 to +538) ⑧	SPDT	1	N/A	N/A		R1M	RKM	RKW
			2				R3M	RLM	RLW
		DPDT	1				RDM	RNM	RNW
			2				REM	ROM	ROW
Series 9 High Temperature Hermetically Sealed Snap Switch	-50 to +1000 (-46 to +538) ⑧	SPDT	1	9AD	9KD	9KV	9AM	9KM	9KW
			2	9BD	9LD	9LV	9BM	9LM	9LW
			3	9CD	9MD	9MV	9CM	9MM	9MW
		DPDT	1	9DD	9ND	9NV	9DM	9NM	9NW
			2	9ED	9OD	9OV	9EM	9OM	9OW

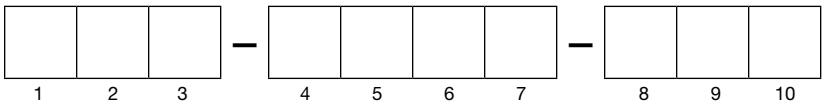

⑤ Process temperature based on +100 °F (+38 °C) ambient.

⑥ For models built to ASME B31.1 in applications over +750° F (+399 °C), 100% radiographic examination is required. Consult factory for pricing.

⑦ HS switches can be used with only materials of construction code 1 on models V35 & Z35.

⑧ Consult factory for temperatures above +842° F (+450 °C)

ASME B31.1 MODEL NUMBERS

FLANGED CAGE MODELS

MODEL NUMBER CODE

Model Code ①	Head Flange ANSI Class	Minimum S.G. Gravity ②	Pressure Rating psig @ ° F							
		1	100	550	750	800	38	288	399	427
B3F	150#	0.78	285	155	95	80	19.6	10.7	6.5	5.5
	300#	0.66	740	588	505	410	51.0	39.6	34.8	28.3
	600#	0.66	1000	875	805	795	68.9	60.3	55.5	54.8
G3F	150#	0.41	285	155	95	80	19.6	10.7	6.5	5.5
	300#	0.55	740	588	505	410	51.0	45.0	41.4	28.3
	600#	0.70	1000	875	805	795	68.9	60.3	55.5	54.8
K3F ③	600#	0.60	1480	1170	1015	825	102.0	80.7	70.0	56.9
Z3F ③	600#	0.67	1480	1170	1015	825	102.0	80.7	70.0	56.9
	900#		2044	1758	1520	1291	140.9	121.2	104.8	89.0

MATERIALS OF CONSTRUCTION

P	Carbon steel chamber, 316L stainless steel float, 400 stainless steel sleeve, ASME B31.1 Construction

CAGE SIZE AND TANK CONNECTION TYPE

Connection Type	C/C	Connection Size											
		1"				1½"				2"			
		ANSI Head Flange Rating (lbs.)											
		150	300	600	900	150	300	600	900	150	300	600	900
Threaded	Std.	B20	B60	B80	B40	C20	C60	C80	C40	D20	D60	D80	D40
Socket Weld	Std.	B30	B70	B90	B50	C30	C70	C90	C50	D30	D70	D90	D50
Flanged Upper Side/ Bottom	Std.	N30	N40	—	—	P30	P40	—	—	Q30	Q40	—	—
	14"	N34	N44	N54	N64	P34	P44	P54	P64	Q34	Q44	Q54	Q64
	16"	—	—	N56	N66	—	—	P56	P66	—	—	Q56	Q66
	18"	—	—	N58	—	—	—	P58	—	—	—	Q58	—
Flanged Side/Side	Std.	S30	S40	—	—	T30	T40	—	—	V30	V40	—	—
	14"	S34	S44	S54	S64	T34	T44	T54	T64	V34	V44	V54	V64
	16"	—	—	S56	S66	—	—	T56	T66	—	—	V56	V66
	18"	—	—	S58	—	—	—	T58	—	—	—	Q58	—

PNEUMATIC SWITCH MECHANISM AND ENCLOSURE

Switch Description	Maximum Supply Pressure		Maximum Process Temperature		Bleed Orifice Diameter		All Models except: B3F, G3F, K3F & Z3F with 600 lb. Head Flanges	Models B3F, G3F, K3F & Z3F with 600 & 900 lb. Head Flanges
	psig	bar	°F	°C	inches	mm	NEMA 1	NEMA 1
Series J Bleed Type	100	7	400	204	.063	1.6	JGH	JGF
	60	4	400	204	.094	2.3	JHH	JHF
	60	4	700	371	.055	1.3	JJH	JJF
Series K Non-Bleed	100	7	400	204	—	—	—	KOF
	40	3	400	204	—	—	KOH	—

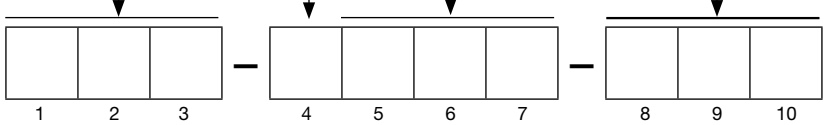

① Models are limited to maximum temperature rating of selected switch mechanism.
② Minimum specific gravity ratings apply to single stage units only. Consult factory for two or three stage units.
③ Models Z3F & K3F contain 7–17 ph stainless steel floats.
④ Codes for a 16 inch center to center dimension are applicable to models G3F and Z3F with 600# flanges only.
⑤ Codes for an 18-inch center to center dimension are applicable to K3F model only.

ELECTRIC SWITCH MECHANISM AND ENCLOSURE

Switch Description	Process ⑥ ⑦ Temperature Range °F (°C)	Contacts	Set Points	All models except B3F, G3F, K3F & Z3F with 600# or 900# ANSI ratings			Models B3F, G3F, K3F & Z3F with 600# or 900# ANSI ratings		
				Aluminum Enclosure					
				FM (US/CA) Groups C&D 1" NPT	FM (US/CA) Group B 1" NPT	ATEX / IECEx 1" NPT	FM (US/CA) Groups C&D 1" NPT	FM (US/CA) Group B 1" NPT	ATEX / IECEx 1" NPT
Series B Snap Switch	-40 to +250 (-40 to +121)	SPDT	1	BKA	BKJ	BCC	BKB	BKK	BC9
			2	BLA	BLJ	BDC	BLB	BLK	BD9
			3	BMA	BMJ	BEC	BMB	BMK	BE9
		DPDT	1	BNA	BNJ	BFC	BNB	BNK	BF9
			2	BOA	BOJ	BGC	BOB	BOK	BG9
Series C Snap Switch	-40 to +450 (-40 to +232)	SPDT	1	CKA	CKJ	CCC	CKB	CKK	CC9
			2	CLA	CLJ	CDC	CLB	CLK	CD9
			3	CMA	CMJ	CEC	CMB	CMK	CE9
		DPDT	1	CNA	CNJ	CFC	CNB	CNK	CF9
			2	COA	COJ	CGC	COB	COK	CG9
Series D DC Current Snap Switch	-40 to +250 (-40 to +121)	SPDT	1	DKB	DKK	DC9	DKB	DKK	DC9
			2	DLB	DLK	DD9	DLB	DLK	DD9
			3	DMB	DMK	DE9	DMB	DMK	DE9
		DPDT	1	DNB	DNK	DF9	DNB	DNK	DF9
			2	DOB	DOK	DG9	DOB	DOK	DG9
Series F Hermetically Sealed Snap Switch	-50 to +750 (-46 to +399)	SPDT	1	FKA	FKJ	FCC	FKB	FKK	FC9
			2	FLA	FLJ	FDC	FLB	FLK	FD9
		DPDT	1	FNA	FNJ	FFC	FNB	FNK	FF9
			2	FOA	FOJ	FGC	FOB	FOK	FG9
Series HS ⑧ Hermetically Sealed 5-amp Snap Switch with Wiring Leads	-50 to +400 (-46 to +204) Δ	SPDT	1	HMJ	HMK	N/A	HMJ	HMK	N/A
			2	HMN	HMP		HMN	HMP	
		DPDT	1	HMS	HMT		HMS	HMT	
			2	HMY	HMZ		HMY	HMZ	
Series HS ⑧ Hermetically Sealed 5-amp Snap Switch with Terminal Block	-50 to +400 (-46 to +204) Δ	SPDT	1	HM3	HM4	HA9	HM3	HM4	HA9
		DPDT	1	HM7	HM8	HB9	HM7	HM8	HB9
Series R High Temperature Snap Switch	-40 to +750 (-40 to +399)	SPDT	1	RKB	RKK	RC9	RKB	RKK	RC9
			2	RLB	RLK	RD9	RLB	RLK	RD9
		DPDT	1	RNB	RNK	RF9	RNB	RNK	RF9
			2	ROB	ROK	RG9	ROB	ROK	RG9
Series 8 Hermetically Sealed Snap Switch	-50 to +750 (-46 to +399)	SPDT	1	8KA	8KJ	8CC	8KB	8KK	8C9
			2	8LA	8LJ	8DC	8LB	8LK	8D9
			3	8MA	8MJ	8EC	8MB	8MK	8E9
		DPDT	1	8NA	8NJ	8FC	8NB	8NK	8F9
			2	8OA	8OJ	8GC	8OB	8OK	8G9
Series 9 High Temperature Hermetically Sealed Snap Switch	-50 to +750 (-46 to +399)	SPDT	1	9KA	9KJ	9CC	9KB	9KK	9C9
			2	9LA	9LJ	9DC	9LB	9LK	9D9
			3	9MA	9MJ	9EC	9MB	9MK	9E9
		DPDT	1	9NA	9NJ	9FC	9NB	9NK	9F9
			2	9OA	9OJ	9GC	9OB	9OK	9G9
Switch Description	**Process ⑥ ⑦ Temp. Range °F (°C)**	**Contacts**	**Set Points**	**CS/Aluminum**	**Cast Iron**		**CS/Aluminum**	**Cast Iron**	
				NEMA 4X	**Class I, Div 1 Groups C&D**	**Class I, Div 1 Group B**	**NEMA 4X**	**Class I, Div 1 Groups C&D**	**Class I, Div 1 Group B**
Series R High Temperature Snap Switch	-40 to +1000 (-40 to +538) ⑨	SPDT	1	N/A	N/A		R1M	RKM	RKW
			2				R3M	RLM	RLW
		DPDT	1				RDM	RNM	RNW
			2				REM	ROM	ROW
Series 9 High Temperature Hermetically Sealed Snap Switch	-50 to +1000 (-46 to +538) ⑨	SPDT	1	9AD	9KD	9KV	9AM	9KM	9KW
			2	9BD	9LD	9LV	9BM	9LM	9LW
			3	9CD	9MD	9MV	9CM	9MM	9MW
		DPDT	1	9DD	9ND	9NV	9DM	9NM	9NW
			2	9ED	9OD	9OV	9EM	9OM	9OW

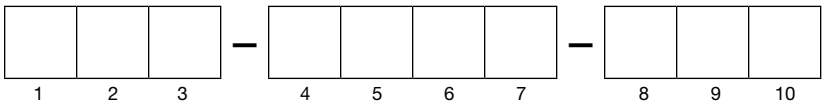

⑥ Process temperature based on +100 °F (+38 °C) ambient.
⑦ For models built to ASME B31.1 in applications over +750 °F (+399 °C), 100% radiographic examination is required. Consult factory for pricing.
⑧ HS switches can be used with only materials of construction code 1 on all models with 600# or 900# ANSI rating.
⑨ Consult factory for temperatures above +842 °F (+450 °C)

ASME B31.3 MODEL NUMBERS

SEALED CAGE MODELS

MODEL NUMBER CODE

Model Code ①	Min. S.G. for Models with Material of Construction Code ②		Pressure Rating											
			psig @ ° F						bar @ °C					
	1	2	100	550	750	800	900	1000	38	288	399	427	482	538
FLOAT MODELS														
B35	0.69	0.72	1000	875	805	795	495	210	68.9	60.3	55.5	54.8	34.1	14.5
C35	0.57	0.59	500	438	403	398	390	210	34.5	30.2	27.8	27.4	26.9	14.5
G35	0.54	0.56	750	656	604	596	450	191	51.7	45.2	41.6	41.1	31.0	13.2
K35 ③	0.40	0.40	600	525	483	477	396	168	41.4	36.2	33.3	32.9	27.3	11.6
L35	0.41	0.43	300	263	242	239	234	191	20.7	18.1	16.7	16.4	16.1	13.2
V35 ④	0.71	0.81	2250	1913	1720	1411	730	N/A	155.1	131.9	118.6	97.3	50.3	N/A
Z35 ④	0.66	0.71	2250	1913	1662	1363	705	N/A	155.1	131.9	114.6	94.0	48.6	N/A
DISPLACER MODEL			**100**	**200**	**300**	N/A			**38**	**93**	**149**	N/A		
B34 ③ ⑤ ⑥	0.40	0.40	1300	1225	1145				89.6	84.4	78.9			

MATERIALS OF CONSTRUCTION

1	Carbon steel chamber, 316L stainless steel float, 400 stainless steel sleeve, ASME B31.3 construction
2	Carbon steel chamber, 316L stainless steel float, 316 stainless steel sleeve, ASME B31.3 construction

TANK CONNECTION TYPE AND SIZE

Type	C/C	Size											
		1"				1½" ⑥				2" ⑥			
Threaded	Std.	B20				C20				D20			
Socket Weld	Std.	B30				C30				D30			
		Cage Mounting ANSI Flange Rating (lbs.)											
		150	300	600	900	150	300	600	900	150	300	600	900
Flanged Upper Side/ Bottom	Std.	N30	N40	N50	N60	P30	P40	P50	P60	Q30	Q40	Q50	Q60
	14" ③	N34	N44	N54	N64	P34	P44	P54	P64	Q34	Q44	Q54	Q64
	16" ⑦	N36	N46	N56	N66	P36	P46	P56	P66	Q36	Q46	Q56	Q66
Flanged Side/Side	Std.	S30	S40	S50	S60	T30	T40	T50	T60	V30	V40	V50	V60
	14" ③	S34	S44	S54	S64	T34	T44	T54	T64	V34	V44	V54	V64
	16" ⑦	S36	S46	S56	S66	T36	T46	T56	T66	V36	V46	V56	V66

PNEUMATIC SWITCH MECHANISM AND ENCLOSURE

Switch Description	Maximum Supply Pressure		Maximum Process Temperature		Bleed Orifice Diameter		Models B35, C35, G35, K35 & L35 with Material of Constr. Code 1	Models B34, V35, Z35 & All Models with Material of Constr. Code 2
	psig	bar	°F	°C	inches	mm	NEMA 1	NEMA 1
Series J Bleed Type	100	7	400	204	.063	1.6	JGH	JGF
	60	4	400	204	.094	2.3	JHH	JHF
	60	4	700	371	.055	1.3	JJH	JJF
Series K Non-Bleed	100	7	400	204	—	—	—	KOF
	40	3	400	204	—	—	KOH	—

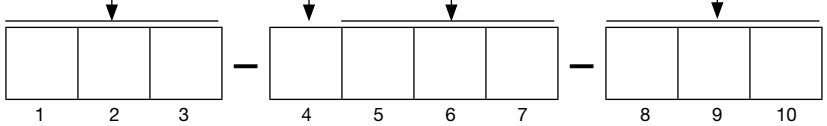

① Models are limited to the maximum temperature rating of the selected switch mechanism. Consult factory if ASME B31.3 certification is required on carbon steel constructions with design temperatures below -17 °C (0 °F).
② Minimum SG ratings apply to single stage units. Consult factory for two and three stage units.
③ Consult factory for 14" center-to-center dimensions on models K35 & B34.
④ Models V35 and Z35 contain 17–7 ph stainless steel floats.
⑤ Consult factory for Model B34 above +300 °F (+149 °C). Available with single switch only.
⑥ Codes 1½" and 2" NPT tank connections are not applicable to the B34 displacer model.
⑦ Codes for a 16" center-to-center dimension are applicable to the K35 model only.

ELECTRIC SWITCH MECHANISM AND ENCLOSURE

Switch Description	Process ⑧ Temperature Range °F (°C)	Contacts	Set Points	Models B35, C35, K35 & L35 with Material of Construction Code 1			Models B34, V35, Z35 & all models with Material of Construction Code 2		
				Aluminum Enclosure					
				FM (US/CA) Groups C&D 1" NPT	FM (US/CA) Group B 1" NPT	ATEX / IECEx 1" NPT	FM (US/CA) Groups C&D 1" NPT	FM (US/CA) Group B 1" NPT	ATEX / IECEx 1" NPT
Series B Snap Switch	-40 to +250 (-40 to +121)	SPDT	1	BKA	BKJ	BCC	BKB	BKK	BC9
			2	BLA	BLJ	BDC	BLB	BLK	BD9
			3	BMA	BMJ	BEC	BMB	BMK	BE9
		DPDT	1	BNA	BNJ	BFC	BNB	BNK	BF9
			2	BOA	BOJ	BGC	BOB	BOK	BG9
Series C Snap Switch	-40 to +450 (-40 to +232)	SPDT	1	CKA	CKJ	CCC	CKB	CKK	CC9
			2	CLA	CLJ	CDC	CLB	CLK	CD9
			3	CMA	CMJ	CEC	CMB	CMK	CE9
		DPDT	1	CNA	CNJ	CFC	CNB	CNK	CF9
			2	COA	COJ	CGC	COB	COK	CG9
Series D DC Current Snap Switch	-40 to +250 (-40 to +121)	SPDT	1	DKB	DKK	DC9	DKB	DKK	DC9
			2	DLB	DLK	DD9	DLB	DLK	DD9
			3	DMB	DMK	DE9	DMB	DMK	DE9
		DPDT	1	DNB	DNK	DF9	DNB	DNK	DF9
			2	DOB	DOK	DG9	DOB	DOK	DG9
Series F Hermetically Sealed Snap Switch	-50 to +750 (-46 to +399)	SPDT	1	FKA	FKJ	FCC	FKB	FKK	FC9
			2	FLA	FLJ	FDC	FLB	FLK	FD9
		DPDT	1	FNA	FNJ	FFC	FNB	FNK	FF9
			2	FOA	FOJ	FGC	FOB	FOK	FG9
Series HS ⑨ Hermetically Sealed 5-amp Snap Switch with Wiring Leads	-50 to +400 (-46 to +204) ⑩	SPDT	1	HMJ	HMK	N/A	HMJ	HMK	N/A
			2	HMN	HMP		HMN	HMP	
		DPDT	1	HMS	HMT		HMS	HMT	
			2	HMY	HMZ		HMY	HMZ	
Series HS ⑨ Hermetically Sealed 5-amp Snap Switch with Terminal Block	-50 to +400 (-46 to +204) ⑩	SPDT	1	HM3	HM4	HA9	HM3	HM4	HA9
		DPDT	1	HM7	HM8	HB9	HM7	HM8	HB9
Series R High Temperature Snap Switch	-40 to +750 (-40 to +399)	SPDT	1	RKB	RKK	RC9	RKB	RKK	RC9
			2	RLB	RLK	RD9	RLB	RLK	RD9
		DPDT	1	RNB	RNK	RF9	RNB	RNK	RF9
			2	ROB	ROK	RG9	ROB	ROK	RG9
Series 8 Hermetically Sealed Snap Switch	-50 to +750 (-46 to +399)	SPDT	1	8KA	8KJ	8CC	8KB	8KK	8C9
			2	8LA	8LJ	8DC	8LB	8LK	8D9
			3	8MA	8MJ	8EC	8MB	8MK	8E9
		DPDT	1	8NA	8NJ	8FC	8NB	8NK	8F9
			2	8OA	8OJ	8GC	8OB	8OK	8G9
Series 9 High Temperature Hermetically Sealed Snap Switch	-50 to +750 (-46 to +399)	SPDT	1	9KA	9KJ	9CC	9KB	9KK	9C9
			2	9LA	9LJ	9DC	9LB	9LK	9D9
			3	9MA	9MJ	9EC	9MB	9MK	9E9
		DPDT	1	9NA	9NJ	9FC	9NB	9NK	9F9
			2	9OA	9OJ	9GC	9OB	9OK	9G9
Switch Description	**Process ⑧ Temp. Range °F (°C)**	**Contacts**	**Set Points**	**CS/Aluminum**	**Cast Iron**		**CS/Aluminum**	**Cast Iron**	
				NEMA 4X	**Class I, Div 1 Groups C&D**	**Class I, Div 1 Group B**	**NEMA 4X**	**Class I, Div 1 Groups C&D**	**Class I, Div 1 Group B**
Series R High Temperature Snap Switch	-40 to +1000 (-40 to +538) ⑪	SPDT	1	N/A	N/A		R1M	RKM	RKW
			2				R3M	RLM	RLW
		DPDT	1				RDM	RNM	RNW
			2				REM	ROM	ROW
Series 9 High Temperature Hermetically Sealed Snap Switch	-50 to +1000 (-46 to +538) ⑪	SPDT	1	9AD	9KD	9KV	9AM	9KM	9KW
			2	9BD	9LD	9LV	9BM	9LM	9LW
			3	9CD	9MD	9MV	9CM	9MM	9MW
		DPDT	1	9DD	9ND	9NV	9DM	9NM	9NW
			2	9ED	9OD	9OV	9EM	9OM	9OW

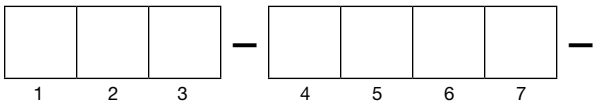

⑧ Process temperature based on +100 °F (+38 °C) ambient.

⑨ HS switches can be used with only materials of construction code 1 on models V35 & Z35

⑩ On condensing applications, temperature down-rated to +400 °F (+204 °C) process at +100 °F (+38 °C) ambient.

⑪ Consult factory for temperatures above +842 °F (+450 °C)

ASME B31.3 AND NACE MODEL NUMBERS

FLANGED CAGE MODELS

MODEL NUMBER CODE

Model Code ①	Head Flange ANSI Class	Min. S.G. for Models with Material of Construction Code ②		Pressure Rating ③											
				psig @ ° F						bar @ °C					
		1	2 or N	100	550	750	800	900	1000	38	288	399	427	482	538
FLOAT MODELS															
B3F	150#	0.78	0.83	285	155	95	80	50	20	19.6	10.7	6.5	5.5	3.4	1.4
	300#	0.66	0.68	740	588	505	410	230	85	51.0	39.6	34.8	28.3	15.9	5.9
	600# ④⑤	0.66	0.71	1000	875	805	795	460	170	68.9	60.3	55.5	54.8	31.7	11.7
G3F	150#	0.41	0.43	285	155	95	80	50	20	19.6	10.7	6.5	5.5	3.4	1.4
	300#	0.55	0.56	740	588	505	410	230	85	51.0	45.0	41.1	28.3	15.9	5.9
	600# ④⑤	0.70	0.76	1000	875	805	795	460	170	68.9	60.3	55.5	54.8	31.7	11.7
K3F ⑤	150#	0.33	0.33	285	155	95	80	50	20	19.6	10.7	6.5	5.5	3.4	1.4
	300#	0.40	0.40	600	525	483	410	230	85	41.4	36.2	33.3	28.3	15.9	5.9
	600# ④⑤⑦	0.60	0.62	1480	1170	1015	825	460	n/a	102.0	80.7	70.0	56.9	31.7	n/a
Z3F	600# ④⑤⑦	0.67	0.74	1480	1170	1015	825	460	n/a	102.0	80.7	70.0	56.9	31.7	n/a
	900# ④⑤⑦	0.67	0.73	2220	1758	1520	1235	690	n/a	153.1	121.2	104.8	85.2	47.8	n/a
DISPLACER MODEL				100	300	500				38	149	260			
C34 ⑧⑨	300#	N/A		740	655	605	N/A			51.0	45.2	41.7	N/A		
	600# ⑤			1480	1310	1205				102.0	90.7	83.1			
	Minimum SG			0.40	0.40	0.44				0.40	0.40	0.44			

MATERIALS OF CONSTRUCTION

1	Carbon steel chamber, 316L stainless steel float, 400 stainless steel sleeve, ASME B31.3 Construction
2	Carbon steel chamber, 316L stainless steel float, 316 stainless steel sleeve, ASME B31.3 Construction
4	316 stainless steel chamber, 316L stainless steel float, 316 stainless steel sleeve, ASME B31.3 Construction
M	316 stainless steel chamber, 316L stainless steel float, 316 stainless steel sleeve, NACE and ASME B31.3 Construction
N	Carbon steel chamber, 316L stainless steel float, 316 stainless steel sleeve, NACE and ASME B31.3 Construction

NACE construction: float cage is thermally stress relieved after welding, then hardness tested to assure compliance. Complies with NACE MR0175 & MR0103 latest revisions.

TANK CONNECTION TYPE AND SIZE

Type	C/C	Size ⑨											
		1"				1½"				2"			
		ANSI Head Flange Rating (lbs.)											
		150	300	600	900	150	300	600	900	150	300	600	900
Threaded s/b	Std.	B20	B60	B80	B40	C20	C60	C80	C40	D20	D60	D80	D40
Socket Weld s/b	Std.	B30	B70	B90	B50	C30	C70	C90	C50	D30	D70	D90	D50
Flanged Upper Side/ Bottom	Std.	N30	N40	N50	N60	P30	P40	P50	P60	Q30	Q40	Q50	Q60
	14" ⑥	N34	N44	N54	N64	P34	P44	P54	P64	Q34	Q44	Q54	Q64
	16" ⑩	N36	N46	N56	N66	P36	P46	P56	P66	Q36	Q46	Q56	Q66
Flanged Side/Side	Std.	S30	S40	S50	S60	T30	T40	T50	T60	V30	V40	V50	V60
	14" ⑥	S34	S44	S54	S64	T34	T44	T54	T64	V34	V44	V54	V64
	16" ⑩	S36	S46	S56	S66	T36	T46	T56	T66	V36	V46	V56	V66

PNEUMATIC SWITCH MECHANISM AND ENCLOSURE

Switch Description	Maximum Supply Pressure		Maximum Process Temperature		Bleed Orifice Diameter		All Models with Material of Construction Code 1 except B3F, C34-1 300#, K3F, G3F & Z3F with 600# or 900# ANSI rating	Model C34-2 300#, C34-1 600# and All Models with Material of Construction Code 2 or N and B3F, G3F, K3F & Z3F with 600# or 900# ANSI rating
	psig	bar	°F	°C	inches	mm	NEMA 1	NEMA 1
Series J Bleed Type	100	7	400	204	.063	1.6	JGH	JGF
	60	4	400	204	.094	2.3	JHH	JHF
	60	4	700	371	.055	1.3	JJH	JJF
Series K Non-Bleed	100	7	400	204	—	—	—	KOF
	40	3	400	204	—	—	KOH	—

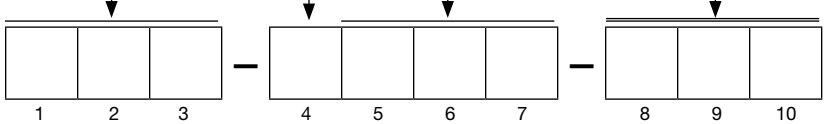

① Models are limited to the maximum temperature rating of the selected switch mechanism. Consult factory if ASME B31.3 certification is required on carbon steel constructions with design temperatures below -17 C (0 F).
② Minimum SG ratings apply to single stage units. Consult factory for two and three stage units.
③ Pressure ratings for carbon steel chambers. Consult factory for stainless steel chamber ratings.
④ 600# and 900# flanged cage models must use switch codes listed under heading "Model C34 & All Models w/Materials of Construction Codes 2 or N and B3F, G3F, K3F & Z3F with 600# or 900# ANSI rating".
⑤ HS switches can be used with Materials of Construction Code 1 only. Example: B3F-1B80-HSG.
⑥ Consult factory for 14" center-to-center dimensions on model K3F.
⑦ Construction Code N is not applicable to this unit due to 17–7 ph stainless steel float material.
⑧ Consult factory for Model C34 up to +750 °F (+399 °C).
⑨ Codes for 150 lb. flanges are not applicable to the C34 displacer model.
⑩ Codes for a 16" center-to-center dimension are applicable to the K3F model only.

ELECTRIC SWITCH MECHANISM AND ENCLOSURE

Switch Description	Process ⑪ Temperature Range °F (°C)	Contacts	Set Points	All models C34 and all models with Material of Construction Code 1 except B3F, G3F, K3F & Z3F with 600# or 900# ANSI ratings			All models C34 and all models with Material of Construction Codes 2 & N and B3F, G3F, K3F & Z3F with 600# or 900# ANSI ratings		
				Aluminum Enclosure					
				FM (US/CA) Groups C&D 1" NPT	FM (US/CA) Group B 1" NPT	ATEX / IECEx 1" NPT	FM (US/CA) Groups C&D 1" NPT	FM (US/CA) Group B 1" NPT	ATEX / IECEx 1" NPT
Series B Snap Switch	-40 to +250 (-40 to +121)	SPDT	1	BKA	BKJ	BCC	BKB	BKK	BC9
			2	BLA	BLJ	BDC	BLB	BLK	BD9
			3	BMA	BMJ	BEC	BMB	BMK	BE9
		DPDT	1	BNA	BNJ	BFC	BNB	BNK	BF9
			2	BOA	BOJ	BGC	BOB	BOK	BG9
Series C Snap Switch	-40 to +450 (-40 to +232)	SPDT	1	CKA	CKJ	CCC	CKB	CKK	CC9
			2	CLA	CLJ	CDC	CLB	CLK	CD9
			3	CMA	CMJ	CEC	CMB	CMK	CE9
		DPDT	1	CNA	CNJ	CFC	CNB	CNK	CF9
			2	COA	COJ	CGC	COB	COK	CG9
Series D DC Current Snap Switch	-40 to +250 (-40 to +121)	SPDT	1	DKB	DKK	DC9	DKB	DKK	DC9
			2	DLB	DLK	DD9	DLB	DLK	DD9
			3	DMB	DMK	DE9	DMB	DMK	DE9
		DPDT	1	DNB	DNK	DF9	DNB	DNK	DF9
			2	DOB	DOK	DG9	DOB	DOK	DG9
Series F Hermetically Sealed Snap Switch	-50 to +750 (-46 to +399)	SPDT	1	FKA	FKJ	FCC	FKB	FKK	FC9
			2	FLA	FLJ	FDC	FLB	FLK	FD9
		DPDT	1	FNA	FNJ	FFC	FNB	FNK	FF9
			2	FOA	FOJ	FGC	FOB	FOK	FG9
Series HS Hermetically Sealed 5-amp Snap Switch with Wiring Leads	-50 to +400 (-46 to +204) ⑫	SPDT	1	HMJ	HMK	N/A	HMJ	HMK	N/A
			2	HMN	HMP		HMN	HMP	
		DPDT	1	HMS	HMT		HMS	HMT	
			2	HMY	HMZ		HMY	HMZ	
Series HS Hermetically Sealed 5-amp Snap Switch with Terminal Block	-50 to +400 (-46 to +204) ⑫	SPDT	1	HM3	HM4	HA9	HM3	HM4	HA9
		DPDT	1	HM7	HM8	HB9	HM7	HM8	HB9
Series R High Temperature Snap Switch	-40 to +750 (-40 to +399)	SPDT	1	RKB	RKK	RC9	RKB	RKK	RC9
			2	RLB	RLK	RD9	RLB	RLK	RD9
		DPDT	1	RNB	RNK	RF9	RNB	RNK	RF9
			2	ROB	ROK	RG9	ROB	ROK	RG9
Series 8 Hermetically Sealed Snap Switch	-50 to +750 (-46 to +399)	SPDT	1	8KA	8KJ	8CC	8KB	8KK	8C9
			2	8LA	8LJ	8DC	8LB	8LK	8D9
			3	8MA	8MJ	8EC	8MB	8MK	8E9
		DPDT	1	8NA	8NJ	8FC	8NB	8NK	8F9
			2	8OA	8OJ	8GC	8OB	8OK	8G9
Series 9 High Temperature Hermetically Sealed Snap Switch	-50 to +750 (-46 to +399)	SPDT	1	9KA	9KJ	9CC	9KB	9KK	9C9
			2	9LA	9LJ	9DC	9LB	9LK	9D9
			3	9MA	9MJ	9EC	9MB	9MK	9E9
		DPDT	1	9NA	9NJ	9FC	9NB	9NK	9F9
			2	9OA	9OJ	9GC	9OB	9OK	9G9
Switch Description	**Process ⑪ Temp. Range °F (°C)**	**Contacts**	**Set Points**	**CS/Aluminum**	**Cast Iron**		**CS/Aluminum**	**Cast Iron**	
				NEMA 4X	**Class I, Div 1 Groups C&D**	**Class I, Div 1 Group B**	**NEMA 4X**	**Class I, Div 1 Groups C&D**	**Class I, Div 1 Group B**
Series R High Temperature Snap Switch	-40 to +1000 (-40 to +538) ⑬	SPDT	1	N/A	N/A		R1M	RKM	RKW
			2				R3M	RLM	RLW
		DPDT	1				RDM	RNM	RNW
			2				REM	ROM	ROW
Series 9 High Temperature Hermetically Sealed Snap Switch	-50 to +1000 (-46 to +538) ⑬	SPDT	1	9AD	9KD	9KV	9AM	9KM	9KW
			2	9BD	9LD	9LV	9BM	9LM	9LW
			3	9CD	9MD	9MV	9CM	9MM	9MW
		DPDT	1	9DD	9ND	9NV	9DM	9NM	9NW
			2	9ED	9OD	9OV	9EM	9OM	9OW

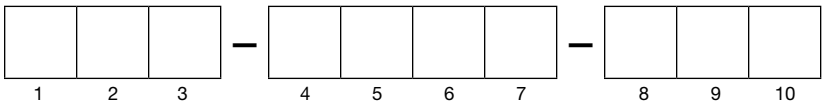

⑪ Process temperature based on +100 °F (+38 °C) ambient.

⑫ On condensing applications, temperature down-rated to +400 °F (+204 °C) process at +100 °F (+38 °C) ambient.

⑬ Consult factory for temperatures above +842 °F (+450 °C).

QUALITY

The quality assurance system in place at AMETEK LMS guarantees the highest level of quality throughout the company.

AMETEK LMS is committed to providing full customer satisfaction both in quality products and quality service.

The AMETEK LMS quality assurance system is registered to ISO 9001 affirming its commitment to known international quality standards providing the strongest assurance of product/service quality available.

WARRANTY



All AMETEK LMS mechanical level and flow controls are warranted free of defects in materials or workmanship for three full years from the date of original factory shipment.

If returned within the warranty period; and, upon factory inspection of the control, the cause of the claim is determined to be covered under the warranty; then, AMETEK LMS will repair or replace the control at no cost to the purchaser (or owner) other than transportation.

AMETEK LMS shall not be liable for misapplication, labor claims, direct or consequential damage or expense arising from the installation or use of equipment. There are no other warranties expressed or implied, except special written warranties covering some AMETEK LMS products.

MAGNETROL® / AMETEK®
LEVEL MEASUREMENT SOLUTIONS

ametek-measurement.com

705 Enterprise Street • Aurora, Illinois 60504-8149 USA
630.969.4000 • info.magnetrol@ametek.com

Copyright © 2025 AMETEK Magnetrol USA, LLC
Performance specifications are effective with date of issue and are subject to change without notice.

BULLETIN: 46-123.25
EFFECTIVE: October 2024
SUPERSEDES: August 2021