Pneumatic Modulevel®
& APM Controllers
Installation and Operating Manual

Liquid Level Control



MAGNETROL® / AMETEK®
LEVEL MEASUREMENT
SOLUTIONS

Read this Manual Before Installing

This manual provides information on Pneumatic Modulevel® & APM Controllers. It is important that all instructions are read carefully and followed in sequence. Detailed instructions are included in the Installation section of this manual.

Conventions Used in this Manual

Certain conventions are used in this manual to convey specific types of information. General technical material, support data, and safety information are presented in narrative form. The following styles are used for notes, cautions, and warnings.

NOTES

Notes contain information that augments or clarifies an operating step. Notes do not normally contain actions. They follow the procedural steps to which they refer.

Cautions

Cautions alert the technician to special conditions that could injure personnel, damage equipment, or reduce a component's mechanical integrity. Cautions are also used to alert the technician to unsafe practices or the need for special protective equipment or specific materials. In this manual, a caution box indicates a potentially hazardous situation which, if not avoided, may result in minor or moderate injury.

WARNINGS

Warnings identify potentially dangerous situations or serious hazards. In this manual, a warning indicates an imminently hazardous situation which, if not avoided, could result in serious injury or death.

Safety Messages

Follow all standard industry procedures for servicing electrical equipment when working with or around high voltage. Always shut off the power supply before touching any components.

WARNING! Explosion hazard. Do not connect or disconnect equipment unless power has been switched off or the area is known to be non-hazardous.

Low Voltage Directive

For use in Installation Category II. If equipment is used in a manner not specified by the manufacturer, protection provided by the equipment may be impaired.

Warranty

All AMETEK LMS mechanical level and flow controls are warranted free of defects in materials or workmanship for three full years from the date of original factory shipment.

If returned within the warranty period; and, upon factory inspection of the control, the cause of the claim is determined to be covered under the warranty; then, AMETEK LMS will repair or replace the control at no cost to the purchaser (or owner) other than transportation.

AMETEK LMS shall not be liable for misapplication, labor claims, direct or consequential damage or expense arising from the installation or use of equipment. There are no other warranties expressed or implied, except special written warranties covering some AMETEK LMS products.

Quality Assurance

The quality assurance system in place at AMETEK LMS guarantees the highest level of quality throughout the company. AMETEK LMS is committed to providing full customer satisfaction both in quality products and quality service.

The AMETEK LMS quality assurance system is certified to ISO 9001, affirming our commitment to internationally recognized quality management standards and continuous improvement.

Copyright © 2022 AMETEK LMS USA, LLC.

Performance specifications are effective with date of issue and are subject to change without notice. AMETEK LMS reserves the right to make changes to the product described in this manual at any time without notice. AMETEK LMS makes no warranty with respect to the accuracy of the information in this manual.

MAGNETROL® / AMETEK®
LEVEL MEASUREMENT SOLUTIONS

Modulevel® Pneumatic Liquid Level Control

Table of Contents

1.0 Introduction
- 1.1 Principle of Operation 5
- 1.2 Operating Cycle. 5
- 1.3 Description 6
  - 1.3.1 Controller Action 6
    - 1.3.1.1 Proportional Control 6
    - 1.3.1.2 Transmitter. 6
    - 1.3.1.3 Transmitter/Receiver Controller. . . . 6
    - 1.3.1.4 Proportional Plus Integral Control . . 6
    - 1.3.1.5 Differential Gap 7
  - 1.3.2 Controller Options 7
    - 1.3.2.1 Direct or Reverse Action 7
    - 1.3.2.2 Electric Limit Switches 7
  - 1.3.3 Mounting Arrangements 7
    - 1.3.3.1 Flanged Top P51, P61 and P62 Displacer Models. 7
    - 1.3.3.2 Top Mounted APM-131 7
    - 1.3.3.3 External Cage P53, P55, P63, P64, P65, P66, P71 and P72 Displacer Models. 7
    - 1.3.3.4 External Cage APM-W251, APM-W254 and APM 291 8
    - 1.3.3.5 Side Mounted P68 Float Model. . . . 8

2.0 Installation
- 2.1 Unpacking 8
  - 2.1.1 P51, P61, P62 and APM-131 Models . . 8
  - 2.1.2 P53, P55, P63, P64, P66, P71, P72, APM-W251, APM-W254 and APM-W291 Models 8
  - 2.1.3 P68 Models 8
  - 2.1.4 Transmitter – Receiver Controller Units . 9
  - 2.1.5 Specifications 9
- 2.2 Mounting 10
  - 2.2.1 Top Mounted Models – P51, P61 & P62. 11
  - 2.2.2 External Cage Models – P53, P55, P63, P64, P65, P66, P71 & P72. 11
  - 2.2.3 Side Mount Models – P68 12
  - 2.2.4 Transmitter – Receiver Models 12
- 2.3 Calibration 13
  - 2.3.1 Proportional Controllers. 13
    - 2.3.1.1 Calibration Chart Instructions 15
  - 2.3.2 Reset Controllers 16
  - 2.3.3 Transmitters 17
  - 2.3.4 Receiver Controllers 18
  - 2.3.5 Differential Gap 18
  - 2.3.6 Interface Models 19
  - 2.3.7 Electric High/Low Limit Switches 20
    - 2.3.7.1 Electrical Ratings. 20
    - 2.3.7.2 Wiring Information 20
    - 2.3.7.3 Adjustment Procedure. 21
- 2.4 Field Modifications and Adjustments 21
  - 2.4.1 Changing Controller Action 21
  - 2.4.2 Proportional Band Models to Differential Gap 21
  - 2.4.3 Pneumatic-to-Current (P/I) Converter . 21
  - 2.4.4 Reset Installation 22
  - 2.4.5 Reset Cleaning 23
  - 2.4.6 Disabling Reset 23

3.0 Reference Information
- 3.1 Troubleshooting. 24
  - 3.1.1 Installation 24
  - 3.1.2 Calibration 24
  - 3.1.3 Operation. 25
- 3.2 Specifications 27
  - 3.2.1 Standard Flanged Top and Flanged Cage Displacer Models P62, P63, P64, P65 and P66 Dimensional Specifications . . 27
  - 3.2.2 High Pressure Flanged Top and Flanged Cage Displacer Models P51, P53 and P55 Dimensional Specifications . . 28
  - 3.2.3 Standard Sealed Cage Displacer Models P71 and P72 Dimensional Specifications 29
  - 3.2.4 Models APM-131, APM-W251, APM-W254 and APM-W291 Dimensional Specifications 30
  - 3.2.5 Standard Side Mount Float Models P68 Dimensional Specifications 31

Modulevel® Pneumatic Liquid Level Control

Table of Contents (continued)

3.3 Replacement Parts 32
3.3.1 Model P68 Threaded and Flanged Parts Identification 32
3.3.1.1 Model P68-2F2A Threaded 3" NPT 33
3.3.1.2 Model P68-2H3A, P68-2H4A and P68-2H5A 4" Flanged 33
3.3.2 Model Series P6x Parts Identification . 34
3.3.2.1 Series P61, P62, P63, P64, P65, P66, P71 and P72 36
3.3.3 Series P51, P53 and P55 Parts Identification 37
3.3.3.1 Series P51, P53 and P55. 38
3.3.4 Model APM-131 Parts Identification . . 39
3.3.4.1 Model APM-131 Part Number 39
3.3.5 Models APM-W251, APM-W254 and APM-W291 Parts Identification . . 40
3.3.5.1 Models APM-W251, APM-W254 and APM-W291 Parts Numbers . . 41
3.3.6 Controller Parts 42
3.3.6.1 Controller Replacement Assemblies Parts Identification . . . 43
3.3.6.2 Tubing Kit 89-8501-015 @ 3–15 and 6–30 psig 44
3.3.6.3 Nozzle Lever Kit 89-8501-002 @ 3–15 and 6–30 psig 44
3.3.6.4 Carriage Assembly Kit 89-8501-003 @ 3–15 and 6–30 psig 44
3.3.6.5 Feedback Assembly Kit 89-8501-005 @ 3–15 and 6–30 psig 45
3.3.6.6 Gasket Kit for Relay Assembly 89-8501-014 @ 3–15 and 6–30 psig 45
3.3.6.7 Additional Replacement Parts. . . . 45
3.3.7 Reset Replacement Parts 46
3.3.7.1 Reset Replacement Assemblies . . 47
3.3.7.2 Replacement Kits (Reset Valve, O-Ring and Offshore). 47
3.3.8 Receiver Controller Parts. 48
3.3.8.1 Receiver Controller Replacement Assemblies 48
3.3.9 Transmitter Mounted Receiver Controller Parts 49
3.3.9.1 Transmitter Mounted Receiver Controller Replacement Assemblies 49
3.3.10 Pneumatic Modulevel Replacement Head Kits. 50
3.4 Model Numbers. 52
3.4.1 Standard Flanged Top and Flanged Cage Displacer Models 52
3.4.2 High Pressure Flanged Top and Flanged Cage Displacer Models 54
3.4.3 Standard Sealed Cage Displacer Models. 56
3.4.4 Standard Side Mount Displacer Models. 58
3.4.5 APM Pneumatic Control Models 59

1.0 Introduction

Modulevel pneumatic controls are displacement actuated level sensors that provide output signals in direct proportion to changes in liquid level.

Simple modular design and proven magnetic coupling make Modulevel controls versatile, highly stable, vibration resistant and adaptable to extremes of temperature and pressure.

1.1 Principle of Operation

The key elements of the Modulevel pneumatic control are the magnetic coupling, which allows the controller to be mechanically isolated from the sealed sensing unit; the range spring, which converts the change in buoyancy force on the displacer into motion; and the controller head, which provides a modulated pneumatic signal in direct proportion to the motion of the spring.

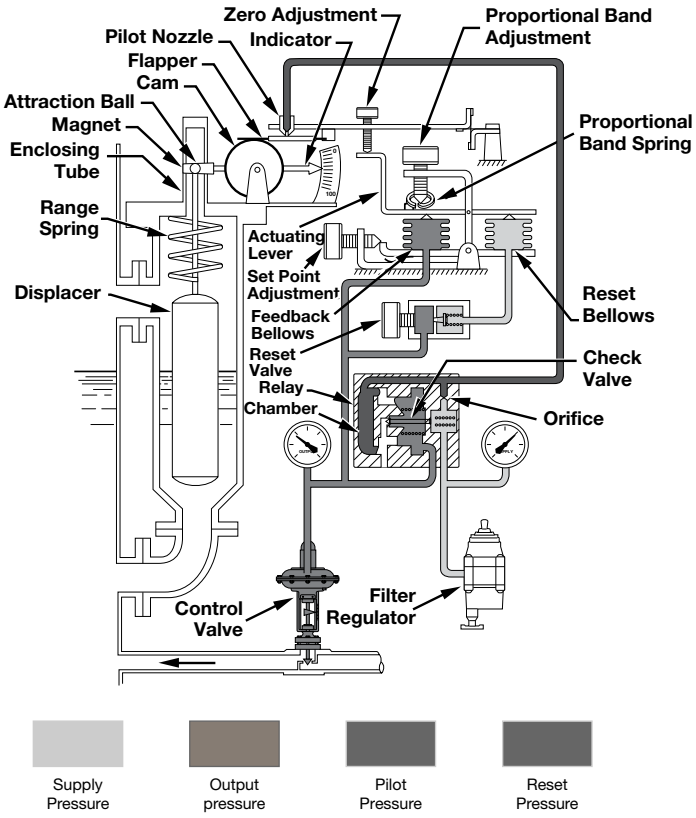

Figure 1

1.2 Operating Cycle

The result of liquid level changes in the vessel is a change in the buoyancy force acting on the displacer and in the load on the spring from which the displacer is suspended. As the spring extends or compresses with the change in load, an attraction ball attached to the spring via a stem assembly moves within the enclosing tube.

A magnet encircling the enclosing tube follows the attraction ball, transferring the motion to a rotating cam, which in turn operates a flapper against a nozzle which increases or decreases the pressure within the pneumatic relay. The output pressure signal can be used in a variety of ways to operate a control valve or signal alarms, indicators, process controls or other devices.

1.3 Description

Modulevel pneumatic instruments are available for a variety of functions to handle different application requirements.

1.3.1 Controller Action

1.3.1.1 Proportional Control

Proportional control instruments are used to maintain the level in a tank within a predetermined band. The output from the Modulevel head controls the opening and closing of a valve to control the increase or decrease of the liquid flow through the vessel.

1.3.1.2 Transmitter

Transmitters provide a pneumatic signal proportional to the level of a liquid. The signal can be fed to a variety of devices as the application requires.

1.3.1.3 Transmitter/Receiver Controller

There are two devices in this version. The transmitter senses level directly at the vessel, and provides a pneumatic signal to the receiver/controller. The receiver/ controller operates in the same manner as a direct connected level device, such as a proportional controller, which allows varying the proportional band and level set point. This unit may be mounted either integrally with the transmitter, or at a more convenient remote location.

1.3.1.4 Proportional Plus Integral Control

Proportional plus integral control instruments (i.e., with reset) operate in the same manner as the proportional unit with one major difference. The offset between the desired level and the actual level is eliminated, thus maintaining the level at a point rather than within a band.

1.3.1.5 Differential Gap

A differential gap instrument provides two distinct outputs, either opened or closed. One distinct output value is obtained when the level exceeds the upper switching point. This value remains constant until the level decreases below the lower switching point. At this time the controller changes to another distinct output value. The new value remains constant until the level again rises above the upper switching point causing the output value to return to the first output value. The distance between the two switching points is called the differential gap.

1.3.2 Controller Options

1.3.2.1 Direct or Reverse Action

Direct acting controllers provide an output signal that increases with level increase. Reverse acting controllers provide an output signal that decreases with level increase.

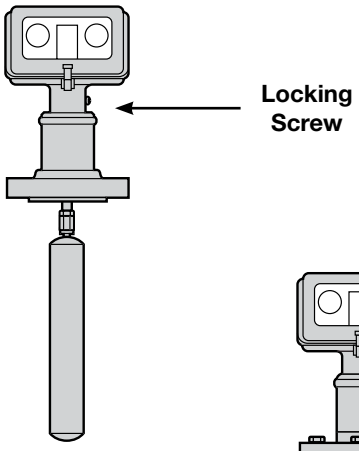

Figure 2
Top Mount

1.3.2.2 Electric Limit Switches

Electric limit switches allow high and low level alarms to be added to any of the pneumatic instruments described above.

1.3.3 Mounting Arrangements

1.3.3.1 Flanged Top P51, P61 and P62 Displacer Models

When mounting inside the tank is possible, flanged top models are the answer (Figure 2). They are used extensively in interface control applications where nonstandard displacers become necessary. An adjustable stainless steel displacer hanger cable is also available. Top mounting models are directly interchangeable with the external cage models.

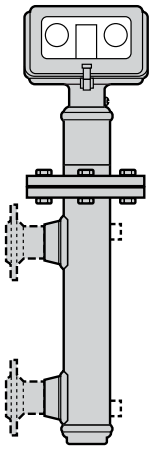

Figure 3
P6X External Cage

1.3.3.2 Top Mounted APM-131

When mounting inside the tank is possible, threaded top models are the answer. An adjustable stainless steel displacer suspension cable is provided as standard.

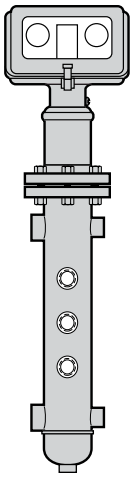

Figure 4
APM External Cage

1.3.3.3 External Cage P53, P55, P63, P64, P65, P66, P71 and P72 Displacer Models

External cage models (Figure 3) can be easily isolated from the process to simplify maintenance and inspection operations. The in-line design eliminates the need for specifying "right hand" or "left hand". Any mounting position is possible by rotating the instrument head. A variety of models are available including sealed or flanged cage with either side/side or side/bottom connections. Carbon steel and stainless steel models are available.

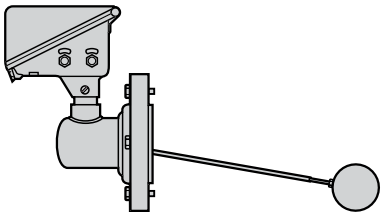

Figure 5

1.3.3.4 External Cage APM-W251, APM-W254, APM-W291

Water Column external cage models (Figure 4) can be easily isolated from the process to simplify maintenance and inspection operations. Sight glass and Try-cock tappings are provided.

1.3.3.5 Side Mounted P68 Float Model

Side mounted models (Figure 5) are ideally suited for narrow level range applications. Carbon steel models are available with either a 3" NPT threaded body or a 4" flanged connection.

2.0 Installation

2.1 Unpacking

After unpacking, inspect all the components to see that no damage has occurred during shipment. Care should be taken not to bend the displacer stem or enclosing tube during unpacking or installation.

Next, open controller case and remove magnet hold down and nozzle lever retainers. Examine internal controller components for any obvious damage or loosened parts. Check all air connections to make certain they are free of any foreign matter.

2.1.1 P51, P61, P62 and APM 131 Models

Top mounting Modulevel units are shipped from the factory with the controller and displacer removed from the head assembly and packed separately in the same carton or crate.

2.1.2 P53, P55, P63, P64, P66, P71, P72, APM-W251, APM-W254 and APM-W291 Models

All cage type Modulevel units are shipped with the controller removed from the chamber assembly and packed separately in the same carton or crate.

A strap and wire assembly retains and protects the displacer within the chamber during shipment. The assembly must be removed through the bottom connection before start-up.

Caution: If reshipping to another location, displacer assembly must again be secured using same strap and wire assembly.

2.1.3 P68 Models

The side mounting Modulevel units are shipped with the controller and float and stem assembly removed from the body and are packed separately in the same carton or crate.

After unpacking, inspect all components to see that no damage has occurred during shipment.

2.1.4 Transmitter — Receiver Controller Units

Dual head receiver controller models may be supplied to be integrally mounted to the top mounting or external cage style Modulevel controls or to be remotely mounted away from the Modulevel controls. Units supplied with top mounting Modulevels may be shipped assembled and connected to the transmitter head or separately for field assembly. External chambered units will have the receiver controller head connected to the transmitter head, but separate from the chamber. Any heads shipped unassembled from the Modulevel will be packed in the same carton or crate as the control. Handle controllers carefully to avoid damage to the airline piping.

2.1.5 Specifications

Description		Specification
Process pressure		Up to 4265 psig at +100 °F (Up to 318 bar at +38 °C)
Process temperature		-150 to +700 °F (-101 to +371 °C) Stainless steel chamber and bolting required for temperatures below -20 °F. (Consult factory).
Specific gravity range		Minimum: 0.23 Maximum: 2.20
Interface detection		Minimum difference of 0.10 specific gravity between liquids
Process connections		NPT, Socket Weld or Flanged
Supply pressure		Instrument quality air (clean and dry) Regulated to 5 psig (.3 bar) above maximum output.
Output signal pressure	Proportional & transmitter	3–15 psig, 6–30 psig
	Differential gap	0–20 psig or 0–35 psig
Visual Indicator		% Span
Level range & proportional band adjustment		Limited only to displacer length. From inches to 10 feet (3 meters).
Air consumption		3 SCFH at 9 psig output 6 SCFH at 15 psig output
Response speed		100 cu. in. output volume in 3.2 sec. upon an output pressure increase from 3–15 psig.
Wetted parts		Trim: 304 or 316 SS Spring: 316 SS or inconel Chamber: Carbon steel or 316 SS
Control action		Direct or reverse
Modes of operation		Proportional control, Differential gap, Transmitter
Housing (standard)		NEMA 1, 2, 3, and 3R
Limit switch ratings		Max. voltage: 120 VAC/VDC Max. resistive load: 10 VAC/VDC Max. current: ¼" amp switching 1 amp holding

2.2 Mounting

Before assembling control to vessel, check with spirit level to ensure that the mounting flange is horizontal. Proper operation of the control depends on the Modulevel controller being within 3° of vertical in all directions. The head assembly with sensing components is installed first, then the controller is placed carefully over the enclosing tube, rotated to desired position, and then locked in place by securely tightening the locking screw. Check to be certain the controller magnet can move smoothly throughout its actuating stroke without binding against the enclosing tube. If binding occurs, loosen the slot-head screw, reposition magnet and tighten screw.

Caution: The spring and stem assembly that protrudes below the mounting flange on a top mounted Modulevel is very fragile. DO NOT handle this assembly or place control so that any amount of force is exerted on the spring and stem assembly. Proper operation of the control requires that this assembly is not damaged or bent.

Caution: Displacer spring and stem are fragile. Do not drop displacers into tank. Hand feed cable into position to avoid bending stem.

Caution: All Modulevel units are shipped from the factory with the enclosing tube tightened and the controller head set screw locked to the enclosing tube (see figure 2, page 7). Failure to loosen the set screw prior to repositioning the supply and output connections may cause the enclosing tube to loosen, resulting in the possible leakage of the process liquid or vapor.

NOTE: Since controller is rotatable through 360°, it is important to make certain controller locking screw is tight before installing air or gas connections.

The supply and output air or gas connections provided on the Modulevel are ¼" NPT. These connections are clearly indicated on the side of the controller. The filter-regulator (if furnished) is to be set to deliver a 20 psig supply pressure to a 3–15 psig output controller or a 35 psig supply pressure to a 6–30 psig output controller. The main supply pressure to the regulator should be between 25 and 250 psig (or 40 and 250 psig) and connected to the inlet side of the regulator. In order to protect the instrument from contaminants, clean, dry air or gas must be used as a supply medium.

Caution: Do not overtighten fittings in supply and output connections. Overtightening may crack the housing outlets.

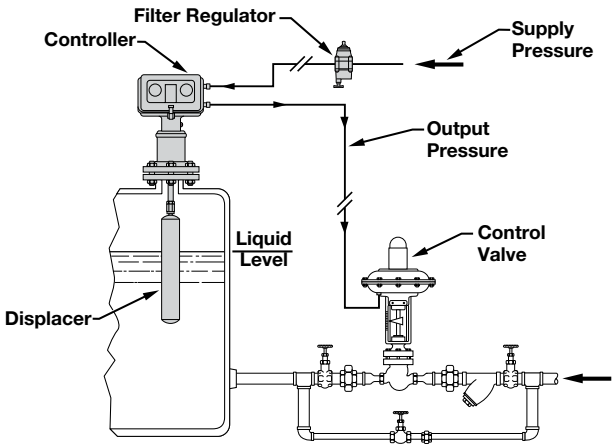

Figure 6
Top Mounted Units

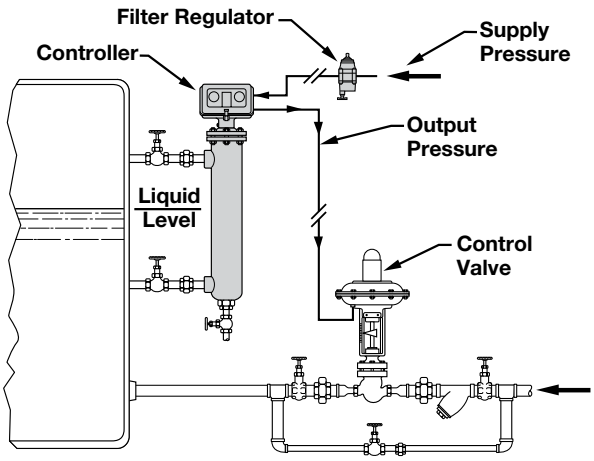

Figure 7
External Cage Units

Caution: Operation of all buoyancy type level devices should be done in such a way as to minimize the action of dynamic forces on the float or displacer sensing element. Good practice for reducing the likelihood of damage to the control is to equalize pressure across the device very slowly.

2.2.1 Top Mounted Models – APM-131, P51, P61, and P62

Check to be certain there are no tubes, or other obstacles in the vessel to interfere with the operation of the displacer. Stillwells are recommended where a continuous agitation or motion is prevalent.

NOTE: Stillwell installation should be checked to be certain tube (or pipe) is plumb. An out-of-plumb still well may restrict displacer movement. Also, ensure that the stillwell is vented at the top to allow the liquid to rise in the tube with level movement.

Figure 6 shows a typical piping installation for a top mounted unit to a tank or vessel.

2.2.2 External Cage Models – APM-W251, APM-W254, APM-W291, P53, P55, P63, P64, P65, P66, P71 and P72

The external cage type Modulevel should be mounted on the side of the tank or vessel with either side/side connections or side/bottom connections, as shown in Figure 7. Mid-range mark on control cage should be aligned to correspond with desired control level in tank or vessel.

NOTE: It is essential that the external cage assembly be mounted plumb to ensure frictionless operation of its internal displacer.

It is recommended that isolation valves be installed in each equalizing line to the cage as well as a drain valve at the bottom of the chamber (refer to Figure 7). Equalizing lines should be sized at least as large as connections provided on the cage.

2.2.3 Side Mount Models – P68

Side mount controls mount horizontally to any tank or vessel through a flanged or threaded pipe connection. Refer to the illustrations on page 31 for threaded nozzle and flanged mounting dimensions. It is essential that the control be mounted horizontal.

NOTE: To allow the 3" float to pass through the nozzle, the nozzle bore diameter must not be less than 3.00" schedule 40 pipe size.

2.2.4 Transmitter – Receiver Models

Check installation considerations described for either top mount or cage type mounting units and apply those appropriate for joint installations with receiver controllers.

Figure 8 shows a typical piping installation of a receiver controller to a top mounted transmitter type Modulevel control. A chamber type Modulevel installation would be the same, with obvious physical differences on a side of tank installation. Piping for a separate receiver controller would be done in a similar manner except unit would be remotely wall or panel mounted in a control house or installed at or near the control valve.

NOTE: Refer to page 49 for detailed assembly of receiver controller to a transmitter type Modulevel controller.

Check alignment of mounting bracket for receiver controller to be certain top surface of collar is flush with top head assembly so that tops of both controller heads are in the same plane.

NOTE: Alignment of controllers is required only to suit factory furnished piping and fittings between controllers. If mounting is to be accomplished using any other method, including remote installations, all piping must be provided by customer.

All pneumatic (piping) connections should have threaded joints, sealed with Teflon thread tape or pipe compound suitable for use on pneumatic lines; ¼" pipe size or 5⁄16" O.D. tubing is recommended.

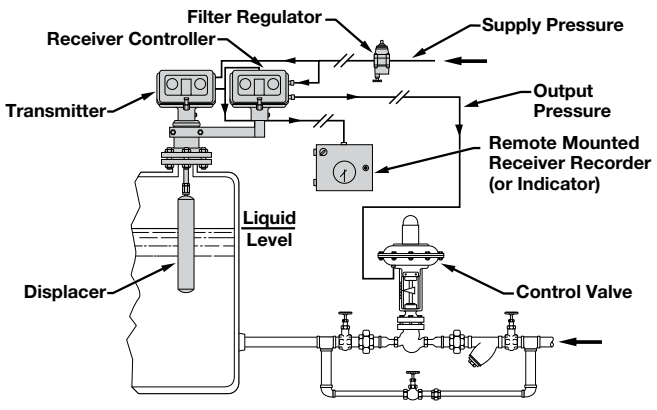

Figure 8
Transmitter – Receiver Controller Units

2.3 Calibration

2.3.1 Proportional Controllers

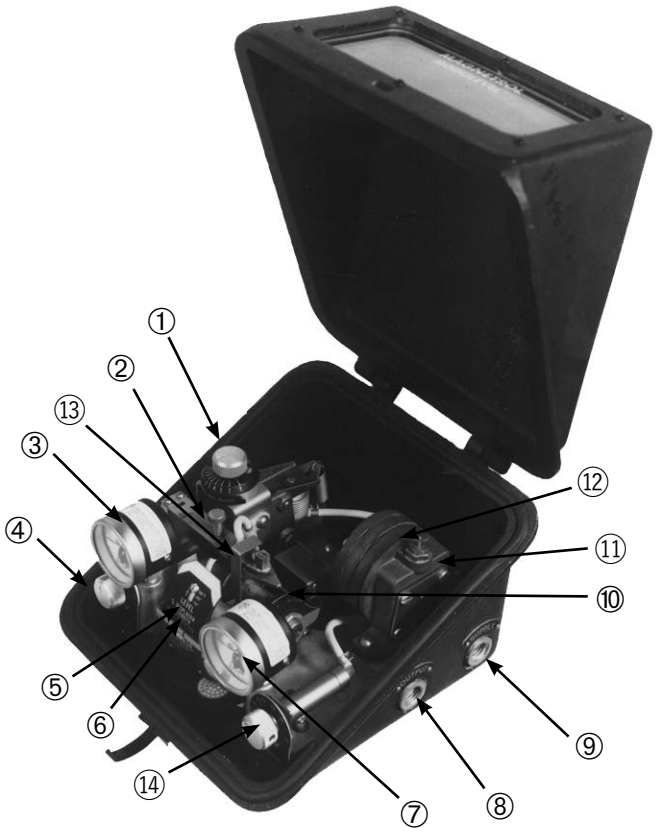

Figure 9
Proportional Controller with Reset

① Proportional band adjustment knob
② Zero adjustment screw
③ Supply pressure gauge
④ Level adjustment knob
⑤ Magnet carriage
⑥ Level indicator
⑦ Output pressure gauge
⑧ Output connection
⑨ Supply connection
⑩ Action cam
⑪ Relay
⑫ Orifice cleanout plunger
⑬ Flapper nozzle assembly
⑭ Reset adjustment knob

Each Modulevel control is calibrated at the factory before shipment. Specified actions have been preset and all scales have been calibrated. Each unit is calibrated at 1.0 SG and for use of the full length of the displacer. However, upon receipt of the instrument the following calibration and adjustment procedure is recommended for all controllers:

1. Check supply pressure:

After appropriate piping has been made to the filter regulator and output connections, and checked for leaks, the supply gauge, shown in Figure 9, should indicate 20 psig (35 psig for 6–30 psig controllers).

2. Check control action:

To check controller action, manually rotate the magnet carriage to simulate an increase in level. Note the direction of the output pressure change. (Rising level will increase the output pressure on direct acting controllers. Conversely, rising level will decrease the output pressure on the reverse acting controllers.) The action cam and level adjustment knob must both indicate the same action

Should it be required to change the controller action, the action cam can be manually rotated 180° to the desired action. Make certain that the notch in the cam is set into the tab of the pilot nozzle assembly. Cam actions are clearly marked on the cam face as indicated in Figure 10. A zero adjustment will normally be required upon change.

NOTE: It is also important that the level adjustment knob scale action be compatible with the cam action. The level adjustment knob scale is printed DIRECT ACTION on one side and REVERSE ACTION on the other. To change scales, remove level adjustment knob and turn over level scale. Replace knob with same orientation on shaft as before removal.

Proportional Control **Differential Gap Control**

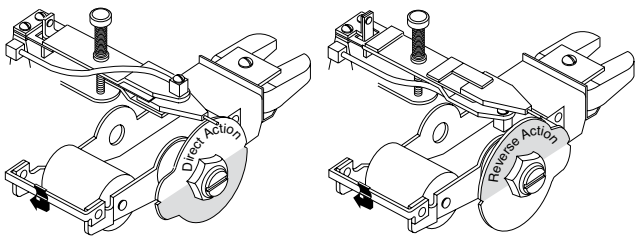

Figure 10
Pilot Nozzle Assembly

3. Check level indicator zero setting.

A level indicator is furnished with each Modulevel pneumatic controller and is conveniently located inside the instrument case. The level indicator, shown in Figure 11, indicates the level as a percentage of the displacer length.

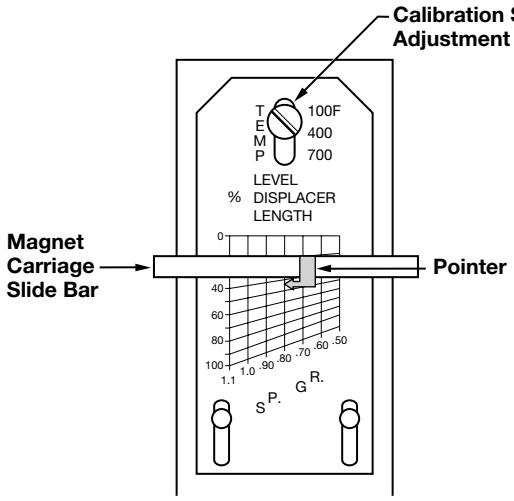

Figure 11
Level Indicator

Figure 11 shows a liquid specific gravity of .8 with a corresponding level reading of 45% and a process temperature of approximately +250 °F (+121 °C). An adjustment is provided on the level indicator to calibrate the pointer and indicator scale when control is at operating temperature.

NOTE: Consult factory for procedure to calibrate level indicator if precise reading is required.

With the system at operating temperature, adjust level of process liquid in the tank (or vessel) to allow the displacer to "hang-free" above the liquid. The pointer on the level indicator should read zero percent on the indicator scale. Refer to Figure 11. To adjust, loosen calibration adjustment screw at the top of the indicator scale and move scale until the pointer is aligned to zero. Retighten adjustment screw.

4. Adjust the proportional band and the level:

(**The proportional band is the span setting.**) The proportional band adjustment knob, located adjacent to the pilot nozzle assembly, sizes the proportional band as a percentage of the displacer length. When the proportional band is set at 5, the output range will correspond to 50% of the total displacer length. For example; on a control with a 14" displacer, a proportional setting of 5 will result in full output range over a 7" level change.

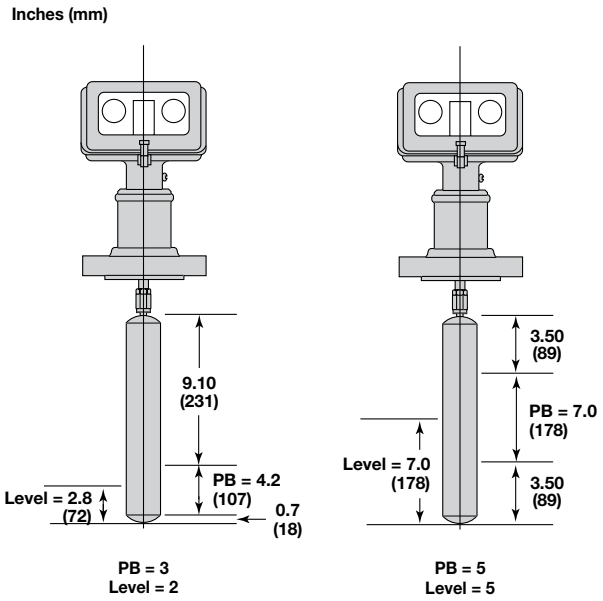

Figure 12
Proportional Band & Level

(**The level adjustment is the control set point.**) The level adjustment knob, located just below the supply pressure gauge, positions the midpoint of the proportional band on the displacer. For example; on a control with a 14" displacer, a level setting of 5 will locate the midpoint of the proportional band 7" from the bottom of the displacer.

The proper method for calibrating a proportional controller follows:

Calibration example: 1.00 specific gravity liquid, 50% proportional band desired, 50% level adjustment desired, 3–15 psig output, direct action.

a. Set the pointer on magnet carriage slide bar to 1.00 specific gravity.

b. Set both the level and proportional band knobs to 5 (or 50%) on each scale.

c. Move the magnet carriage by hand until the pointer reads 50% of displacer length, hold accurately at this position.

d. Adjust the zero screw until the output pressure gauge reads 9 psig.

e. Move the magnet carriage pointer to 75% displacer length. Output pressure should read 15 psig.

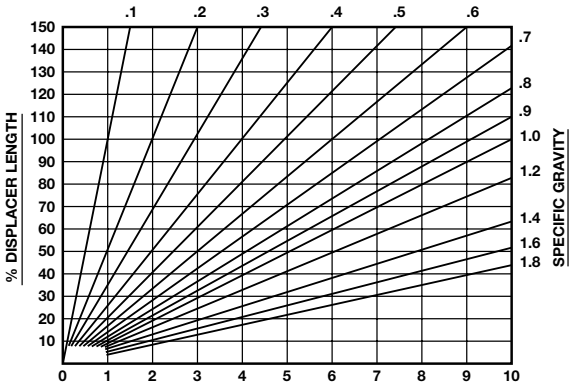

Figure 13
Dual Setting for Level & Proportional Band

NOTE: If required, small readjustments can be made at the level and proportional band knobs.

5. Set the level and proportional band for your application. Use calibration chart and instructions given in Figure 13 to select the level and proportional band dial settings based on the specific gravity of liquid to be measured.
   a. Set the magnet carriage slide bar to the correct liquid specific gravity for your application.
   b. To check the zero adjustment, bring the liquid level up until the level indicator reads the desired level set point. Set the zero adjustment screw until output pressure gauge reads 9 psig.
6. To check the level and 3–15 settings:

   Adjust the liquid level until the level indicator reads the low value of the desired span range in terms of % of displacer length. The output pressure should read 3 psig. Adjust the liquid level to the maximum value of the desired span range in terms of % of displacer length. The output pressure should read 15 psig.

2.3.1.1 Calibration Chart Instructions (for operating at SG other than 1)

To set level:

1. Determine the desired level set point in terms of % of displacer length.
2. Trace desired level from left to right to the specific gravity line for the product.
3. Trace down from where the two lines intersect to the appropriate dial setting.
4. Adjust the level setting on the controller to this value.

To set proportional band:

1. Determine the desired proportional band in terms of % of displacer length.
2. Trace from left to right to the specific gravity line for the product.
3. Trace down from where the two lines intersect to the appropriate dial setting.
4. Adjust the proportional band setting on the controller to this value.

NOTE: If required, small readjustments can be made at the level and proportional band knobs. To increase proportional band, the band knob is turned to a higher number. For best control, it is normally desirable to set the proportional band at the narrowest setting which will not produce cycling. To raise the level, the level adjustment knob is rotated in the desired direction indicated on the dial face.

2.3.2 Reset Controllers

Each Modulevel control is factory calibrated before shipment for 30% span and minimum reset. The following calibration and adjustment procedures are recommended for all reset controllers:

1. Check to make sure the reset knob is fully counterclockwise.

NOTE: This effectively reduces the reset time to a minimum, but does not completely eliminate reset.

2. Follow the calibration steps 1 through 4 for proportional controllers beginning on page 13.
3. Use the calibration chart, Figure 13, to select the level and proportional band initial settings, based on the specific gravity of the liquid to be measured.
4. Adjust the reset clockwise until stable control is maintained.
5. Set the magnet carriage slide bar to the correct liquid specific gravity for your application.

The following adjustment procedure can be used to calibrate the reset controller to your specific application by adjusting the liquid levels:

Alternate method to calibrate reset

1. Set the proportional band index to 10. (This setting is comparable to 100% for S.G. equal to 1.0.)
2. Turn the reset dial fully counterclockwise.
3. Slowly open downstream and upstream manual control valves and close by-pass valve.
4. Adjust control point to desired level by means of level adjustment knob.
5. Narrow the proportional band until a cyclic control condition occurs. Then, widen the proportional band by approximately 20% to give stable control.
6. Decrease the reset time until a cyclic condition again occurs. Then, increase the reset time until stable control is maintained.
7. Normally the narrowest proportional band and fastest reset timing required to obtain stability will produce the optimum control. It is recommended that a momentary load upset is then produced to further check system stability and response. (Load can be imposed by moving magnet carriage manually.)

NOTE: Allow system enough time to stabilize after each adjustment.

2.3.3 Transmitters

For Modulevel transmitters, the output signal is directly proportional to the level on the displacer. To calibrate a Modulevel transmitter:

1. Follow steps 1 through 3 for Proportional Controllers (page 13).
2. Set the zero adjustment knob to a vertical position (arrow straight up at 12 o'clock).

NOTE: Don't confuse the zero adjustment knob with the zero screw located on top of the pilot nozzle assembly.

3. Set the pointer on the magnet carriage slide bar to the process specific gravity.
4. Set the specific gravity knob to the process specific gravity.

NOTE: The specific gravity adjustment sets the span for the unit.

5. Rotate the magnet carriage on the visual level indicator by hand, until the pointer reads 50% of displacer length.
6. While holding the magnet carriage at 50%, adjust the zero screw to obtain 9 psig output pressure for 3–15 psig units (or 18 psig output for 6–30 units).
7. Rotate the magnet carriage by hand to 0% displacer length. The output should be 3 psig. If it is not, slightly adjust the specific gravity knob to obtain 3 psig output pressure.
8. Rotate the magnet marriage by hand to 100% displacer length. The output pressure should be 15 psig. If it is not, slightly adjust the specific gravity knob to obtain 15 psig output pressure.
9. Recheck the midpoint (50% displacer). Adjust the zero screw to obtain 9 psig output pressure if it has changed.
10. Recheck the zero output and full scale output.

The Modulevel transmitter has now been calibrated using the level indicator to simulate process level. If a more precise calibration to the actual process conditions is required, the above procedure can be performed using actual process level on the displacer to set the calibration points.

2.3.4 Receiver Controllers

1. Connect the output from the transmitter to the receiver controller input at the rear of the receiver controller housing.
2. Connect a separate supply and output at the right side of the receiver controller housing.
3. Set the proportional band knob at 100 (100%).
4. Set the direct acting knob at 5 (50%). The output gauge should read the same as the transmitter output. If it does not, adjust the zero knob on the receiver controller until both readings are the same.

   To increase or decrease span distance, turn the proportional band knob to the setting desired, for example, 50 = 50% of span. To move the span mid-point, turn the direct action knob to the setting desired.

   For a reverse acting output, from a direct acting transmitter output, invert the spring/bellows assembly so that the bellows are on top. Recalibrate as described above.

   Remove the direct acting indicator plate, and turn it to reverse acting. Recalibrate as described above.

   If reset is included with the receiver controller, turn the reset knob fully counterclockwise and calibrate as described above.

   Adjust reset clockwise until stable control is maintained.

2.3.5 Differential Gap

1. Follow steps 1 through 4 of Proportional Controller Calibration section. Refer to pages 13 through 17, except the output is 0–20 psig or 0–35 psig with no mid-range adjustment.

NOTE: When checking the control action for a direct action differential gap unit, set the cam to reverse action; for a reverse action differential gap unit, set cam to direct action.

2. Check that the pilot nozzle assembly is set up for differential gap operation. Figure 10 on page 13 illustrates the pilot nozzle flapper configurations used for the two control modes, proportional and differential gap. If your unit is already set up for differential gap mode, proceed to step 3.

To change the control mode:

a. Loosen the tube clamp screw.

b. Remove the zero screw from the pilot nozzle assembly.

c. Remove both screws and top plate from the pilot nozzle assembly.

d. Flip the pilot nozzle assembly 180° and install screws with top plate in position.

e. Install the zero screw in the pilot nozzle assembly.

f. Rotate the tube clamp to horizontal and tighten the tube clamp screw. The cam follower should now rest on the action cam. If it does not, readjust bracket without crimping the tube.

NOTE: Make sure the tube is not kinked and does not interfere with the carriage and the nozzle lever.

g. Change the controller action. For direct action, set the cam to reverse acting; for reverse action, set the cam to direct acting.

3. Check zero output. Set level adjustment knob to 5 or vertical position. Set proportional band knob to 3. Place level indicator at 35% position (65% position for reverse action units). Adjust zero screw to get supply pressure value output; then, slowly readjust the zero screw until output suddenly decreases to zero.

4. Check 20 psig or 35 psig output. Slowly move the attraction sleeve to 65% (35% for reverse action units), at which point the output should suddenly rise to supply pressure. If not, adjust the proportional band knob until it does.

5. Set the level and proportional band for your application.

2.3.6 Interface Models

For an interface application, the Modulevel has been factory precalibrated to operate in liquids with specific gravities supplied by the customer. The displacer is weighted to obtain a zero (3 psig or 6 psig signal) with the displacer fully submerged in the lighter liquid only [15 psig or 30 psig with displacer covered with the heavier fluid]. The indicator arrow should be set to the difference between the two specific gravities of the liquids.

Follow the procedures given for installation and calibration of proportional controllers. Refer to pages 13 through 17. Keep in mind that the "hang–free" or zero setting is obtained with the displacer fully submerged in the lighter liquid, and completely uncovered by the interface (heavier liquid).

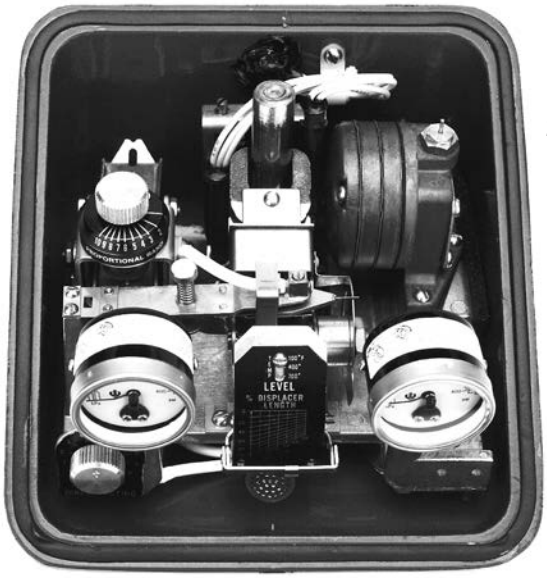

Figure 14

As is indicated in the Calibration section for proportional controllers, the signal should be at 9 psig or 18 psig output with the interface level at the control set point (level knob setting) on the displacer. Because of the reduced displacer motion for interface applications, the proportional band should be set as wide as possible, with a minimum of 50%.

2.3.7 Electric High/Low Limit Switches

The Pneumatic Modulevel is available with optional built-in, adjustable electric high/low level limit switching. This economical, optional feature is well-suited to numerous applications where a combination pneumatic control and electric switch actuation is desired.

The Pneumatic Modulevel is used to pneumatically position a diaphragm-type feedwater control valve in response to water level changes in the steam drum. The convenient addition of electric limit switching provides economical high and low level alarm indication. These switches are not intended for primary control purposes.

NOTE: Not suitable for Class I, Div. 1 applications.

2.3.7.1 Electrical Ratings

Each reed switch carries the following electrical ratings:

Maximum voltage . . . . . 120 VAC or 120 VDC
Maximum resistive load . . . . . 10 VAC or VDC
Maximum current . . . . . ¼ ampere switching,
1 ampere holding

NOTE: For lamp or capacitive applications, the reed switches are rated six (6) watts maximum.

2.3.7.2 Wiring Information

Each reed switch assembly is wired at the factory and furnished with number-coded, 24.00 inch long silicone rubber insulated copper lead wires. Each reed switch is SPDT in operation. Standard wiring follows:

High level reed switch

No. 5 lead is common

No. 6 lead energizes at high level

No. 4 lead de-energizes at high level

Low level reed switch

No. 2 lead is common

No. 3 lead energizes at low level

No. 1 lead de-energizes at low level

NOTE: Use extreme care in handling the reed switches during wiring and adjustment procedures.

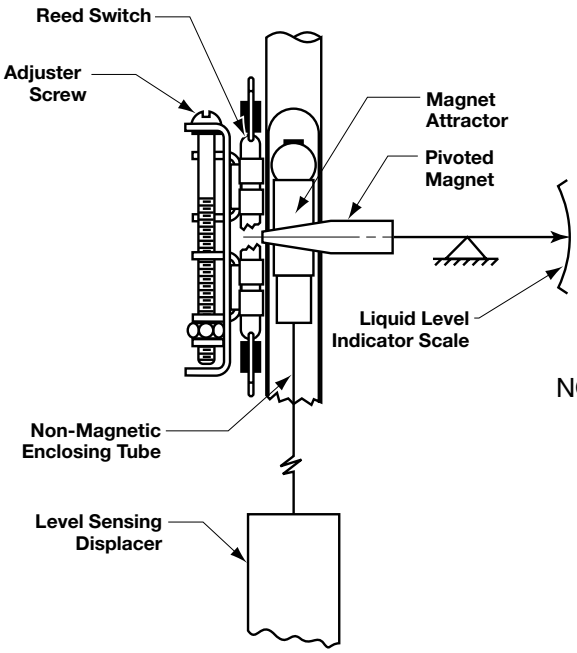

Figure 15

2.3.7.3 Adjustment Procedure

Prior to adjusting the reed switches, the Pneumatic Modulevel should be calibrated to obtain the desired pneumatic proportional band and level position adjustment.

After wiring the reed switches to the device to be operated, they may be adjusted manually to actuate at the desired high and low liquid level positions. Move the liquid indicator by hand to the desired low level actuating point on the indicator scale.

NOTE: Scale readings are expressed in percent of displacer length.

Hold the indicator at the desired low level actuating point. Turn the left hand adjuster screw until the reed switch actuates.

The high level reed switch is adjusted in the same manner by moving the level indicator to the desired high level actuating point, and by turing the right hand adjuster screw until the high level reed switch actuates.

2.4 Field Modifications and Adjustments

2.4.1 Changing Controller Action

The controller can be changed from direct acting to reverse acting or vice versa. Should it be required to change the controller action, refer to step 2 in the Proportional Controllers section of Calibration. Refer to page 13.

2.4.2 Proportional Band Models to Differential Gap

A proportional band controller can be changed to operate in the differential gap mode. For the appropriate procedures, see the Differential Gap section on page 18.

2.4.3 Pneumatic-to-Current (P/I) Converter

Modulevel units are available with a P/I transducer to provide an electronic output signal proportional to liquid level change. Refer to the manufacturer's instructions supplied with the transducer.

2.4.4 Reset Installation

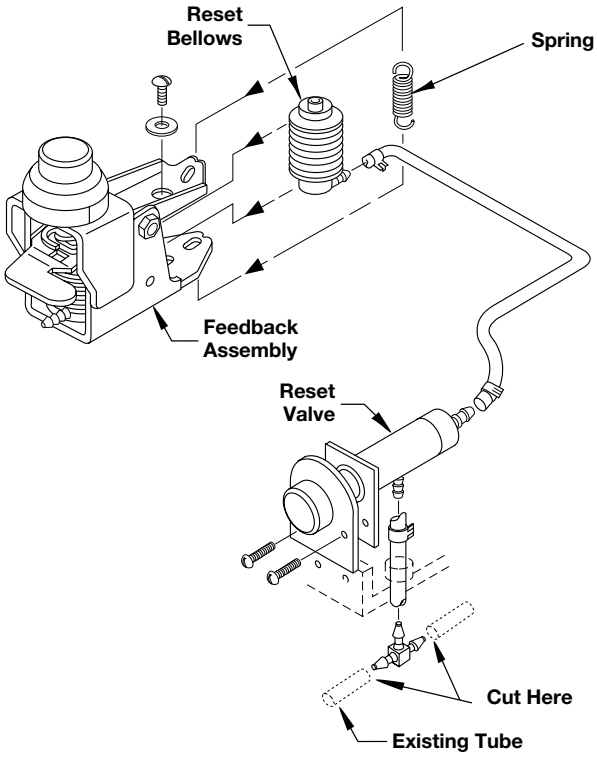

Figure 16
Reset Assembly

Reset, when added to a proportional controller, acts to maintain the controlled liquid level at the desired control point while eliminating any sustained offset from this point.

The reset adjustment is accomplished by manually adjusting a precision needle valve. The reset dial is calibrated from .03 to 1.0 minutes per repeat, with short intervals at the low end of the scale to give precise settings. The reset timing refers to the time in minutes required for the reset to produce an additional output pressure change equal to the previous change caused by proportional action.

The reset module assembly may be added to any Modulevel Proportional Controller in the field.

The following procedure is recommended for adding reset to a proportional controller in the field.

1. The knob on the reset assembly should point to the 12 o'clock position. Tear foam rubber from between the two plates on the reset assembly. Make sure knob remains at the 12 o'clock position.

NOTE: Do not move the front plate or knob on the reset valve or the reset assembly will not work.

2. Remove both screws from the reset valve assembly.
3. Drop the reset valve into position on the frame.
4. Install and tighten the two screws.
5. Add one clamp to each end of both tubes.
6. Slide the long piece of tube onto the barb at rear of reset valve. Slide the clamp into position.
7. Slide the middle prong of the barbed tee onto short piece of tube. Slide the clamp into position.
8. Slide the short piece of tube opposite the barbed tee onto the vertical barb on bottom of reset valve. Slide the clamp into position.
9. Cut the tube adjacent to the barbed tee below the reset valve assembly. Refer to Figure 16.
10. Slide the clamps over the cut ends of the tube.
11. Slide the cut tubes onto the barbed tee.
12. Insert the reset bellows in the feedback assembly so that the bellows end bushings are piloted in the bracket locating holes.
13. Rotate the reset nipple to the 2 o’clock position as you look down at the reset bellows.

14. Route the long piece of tube from the reset valve, under the relay assembly, behind the enclosing tube and to the reset bellows.
15. Slide the long piece of tube onto the reset bellows. Slide the clamp into position.
16. Add the washer and screw through the lever assembly and into the reset bellows. Tighten the screw.
17. Add the reset bias spring to the tail end of the lever assembly.
18. Refer to the reset calibration procedure on page 16.

2.4.5 Reset Cleaning

Should it be required to clean the reset orifice, refer to the reset replacement parts drawing on page 46 and proceed as follows:

1. Disconnect the reset line adaptor fitting from the valve body and remove the reset valve mounting screws.
2. Remove the reset valve and disassemble bushing along with all related parts.

NOTE: Shaft and bracket assembly must not be disassembled.

3. Clean orifice and plunger set by dipping in carbon tetrachloride or any suitable solvent being careful not to mar any finished surfaces.

2.4.6 Disabling Reset

In the case that the proportional controller is supplied with reset that is no longer required, the reset can be disabled to modify the controller head to proportional only.

To disable this action:

1. Turn the reset knob fully counter-clockwise
2. Disconnect hose (attached to rear of reset assembly) by removing the compression fitting and pulling the hose from the nozzle.
3. Trace the hose to the bellows assembly and remove the bias spring completely from this assembly. Leave this end of the hose attached to the bellows nozzle.

Unit will now be configured as a direct acting proportional and is ready for calibration.

3.0 Reference Information

3.1 Troubleshooting

3.1.1 Installation

The magnet carriage assembly binds at either the magnet or the indicator scale.

1. The magnet binds on the enclosing tube. Loosen the retaining screw on magnet bracket and adjust the magnet alignment.
2. The carriage binds on the indicator scale. Check for damaged, bent, or loose parts.
3. Check for proper mounting of the controller head.

3.1.2 Calibration

Signal pressure does not change with simulated level change or unit won't calibrate properly.

1. Make certain the output gauge is operational.
2. Make certain the supply gauge reads 20 psig for 3–15 models or 35 psig for 6–30 models.
3. Check for proper calibration settings, refer to appropriate calibration instructions on pages 13 through 18.
4. Check the proportional band and level settings for proper process specific gravity. Refer to the calibration chart, Figure 13 on page 15, in the Calibration section, for settings corresponding to process specific gravities other than 1.0.
5. The level indicator should be set for the proper process temperature.

Cannot obtain proper midspan output (9 psig for 3–15 models or 18 psig for 6–30 models).

1. Adjust the zero adjustment screw.
2. Check if reset is included, the output signal will not be steady.

Constant high output (pressure does not drop after manually moving the carriage so that the flapper drops away from the nozzle).

1. Clogged exhaust nozzle from contamination or poor quality air supply. Clean nozzle by removing the small screw on the top of the nozzle and blow out any foreign material, or run fine monofilament type line through the opening.

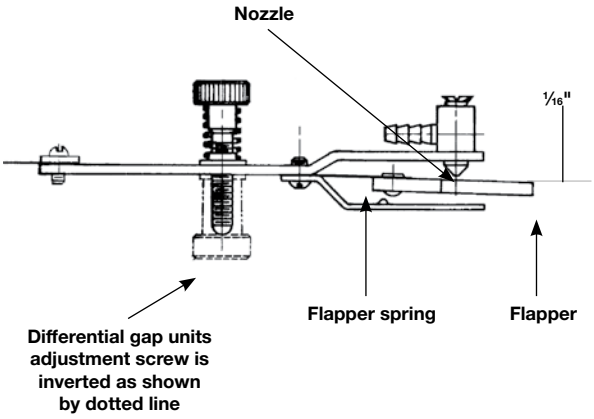

Figure 17
Reset Assembly

2. Damaged or bent flapper spring. The flapper should stroke approximately 1/16" away from the nozzle in the free hanging position. If it does not, carefully bend the spring down with a screwdriver forcing the flapper away from the nozzle. Refer to Figure 17.
3. Obstructed output. Check connection at signal output.

Constant low output, cannot obtain full scale signal.

1. Check for a clogged relay/wiper by depressing the orifice clean out plunger. If this does not solve the problem, the relay may be internally damaged. Consult the factory.
2. Check for proper supply pressure, described above.
3. Check for leaks at all field connections and tubing.
4. Check calibration settings.

3.1.3 Operation

Control valve continually oscillates or hunts.

1. Proportional band setting is too narrow. To ensure that the optimum proportional band setting has been made, create a momentary load upset by manually moving the magnet carriage and allowing the controller to again come into balance. If a cyclic condition recurs, widen the band slightly and repeat the above procedure until stability is maintained.
2. Distance between the control valve and Modulevel controller is too great (time lag). Install volume booster in the signal line.
3. If reset is included:

   The reset response setting may be too fast. Increase the reset time until stable control is maintained

   Excessive offset. Check the reset line for leaks; these connections must be airtight.

No output change as level changes.

1. Check that all gasketed joints on the relay are tight.
2. Check for leaks.
3. Depress relay/wiper plunger since the orifice may be plugged.
4. Remove the enclosing tube and inspect it for internal buildup.
5. Unbolt the head assembly and check for displacer interference.

6. Remove parts from the head assembly and inspect internal components.
7. Consult factory.
8. Check sizing and operation of control valve. An oversized valve or excessive friction are possibilities.
9. Check the output capacity. Controllers tend to be unstable when dead-ended due to their high degree of sensitivity. This condition is particularly aggravated when coupled with 1 and 8 above.

3.2 Specifications

3.2.1 Standard Flanged Top and Flanged Cage Displacer Models P61, P62, P63, P64, P65 and P66

Dimensional Specifications

Inches (mm)

NOTE: Controller head may be rotated through 360°.

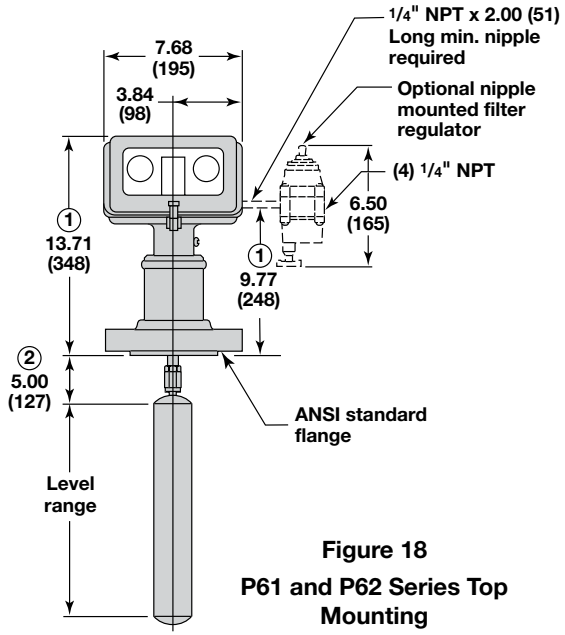

Figure 18

P61 and P62 Series Top Mounting

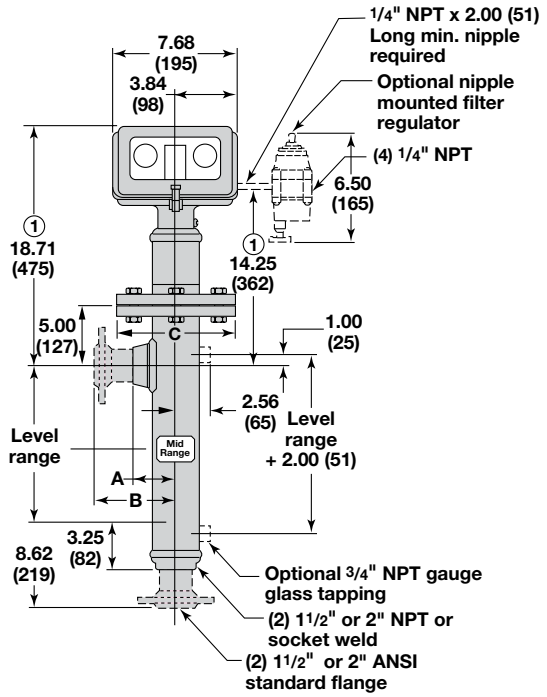

Figure 19

P63 and P64 Series with Side/Bottom Connections

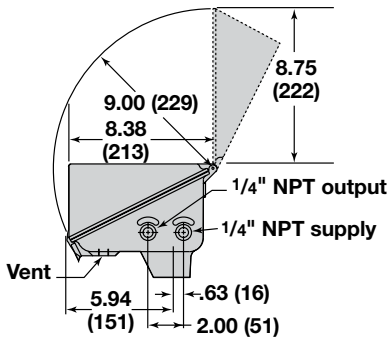

Figure 20

Controller Head (side view)

Outlet Size	Dimension A
1½" NPT or Socket Weld	3.19 (81)
2" NPT or Socket Weld	3.31 (84)

Outlet Size	Dimension B
1½" Flanged	6.25 (159)
2" Flanged	6.25 (159)

Flange Size & Class	Dimension C
1½" or 2", 150 lb.	7.50 (191)
1½" or 2", 300 lb.	8.25 (210)
1½" or 2", 600 lb.	8.25 (210)

① Add 3.12 (79) for units with specific gravity and temperature codes 4, 5 or 6.

② Distance without stem extension is 5.00 (127) standard. Can be furnished to a minimum distance of 3.00 (76).

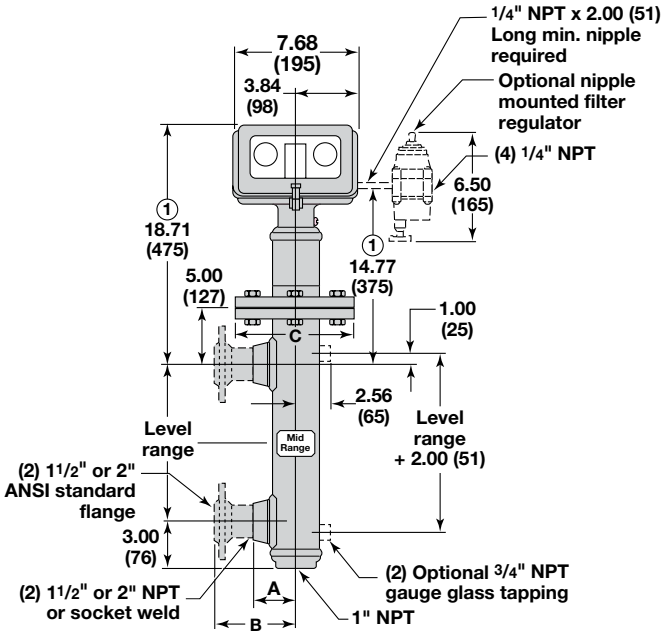

Figure 21

P65 and P66 Series with Side/Side Connections

3.2.2 High Pressure Flanged Top and Flanged Cage Displacer Models P51, P53 and P55

Dimensional Specifications

Inches (mm)

NOTE: Controller head may be rotated through 360°.

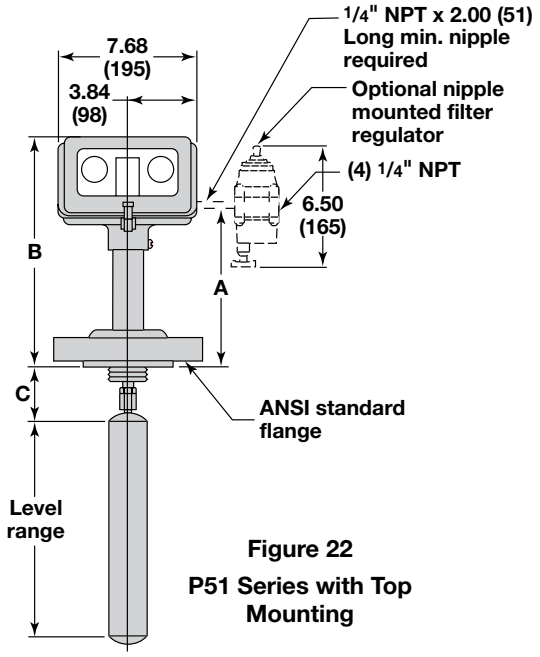

Figure 22

P51 Series with Top Mounting

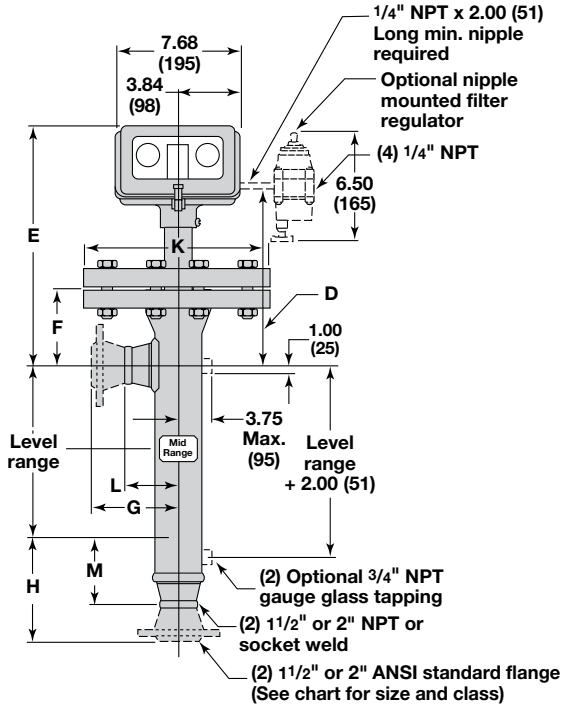

Figure 23

P53 Series with Upper Side/Bottom Connections

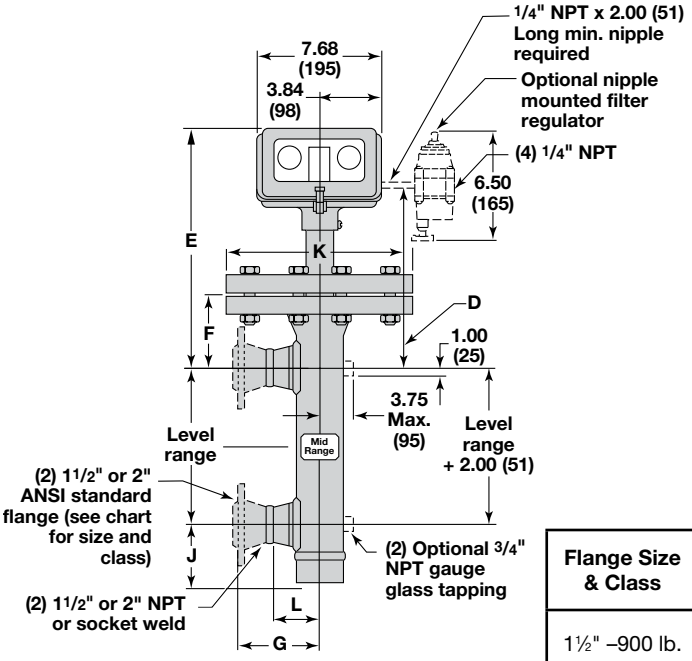

Figure 24

P55 Series with Side/Side Connections

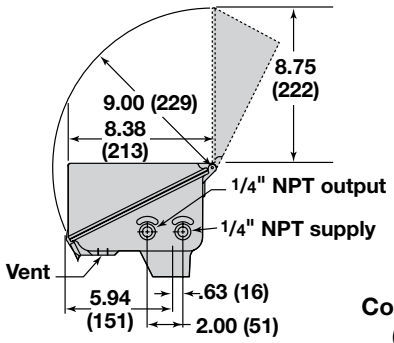

Controller Head (side view)

Outlet Size	Dimensions	
	L	M
1½" NPT or Socket Weld	4.00 (102)	3.44 (87)
2" NPT or Socket Weld	4.38 (111)	3.50 (89)

Flange Size & Class	Dimensions									
	A	B	C	D	E	F	G	H	J	K
1½" –900 lb.	8.48 (215)	12.41 (315)	9.31 (236)	17.96 (456)	21.89 (556)	9.31 (236)	7.25 (184)	8.43 (214)	3.44 (87)	11.50 (292)
2"–900 lb.							8.18 (208)	9.38 (238)		
1½" –1500 lb.	8.86 (225)	12.79 (325)	9.31 (236)	18.34 (466)	22.27 (566)	9.31 (236)	7.93 (201)	9.13 (232)	3.44 (87)	12.25 (311)
2"–1500 lb.							8.87 (225)	10.13 (257)		
1½" –2500 lb.	9.73 (247)	13.66 (347)	9.31 (236)	19.21 (488)	23.14 (588)	9.31 (236)	9.06 (230)	10.25 (267)	3.44 (87)	14.00 (356)
2"–2500 lb.							9.87 (251)	11.13 (283)		

3.2.3 Standard Sealed Cage Displacer Models P71 and P72

Dimensional Specifications

Inches (mm)

NOTE: Controller head may be rotated through 360°.

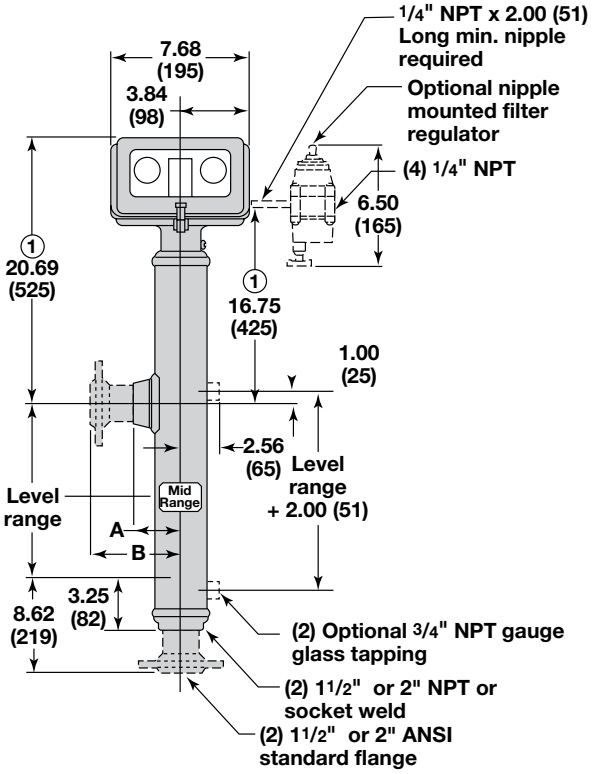

Figure 25

P71 Series with Upper Side/Bottom Connections 150, 300, 600 lb. Class

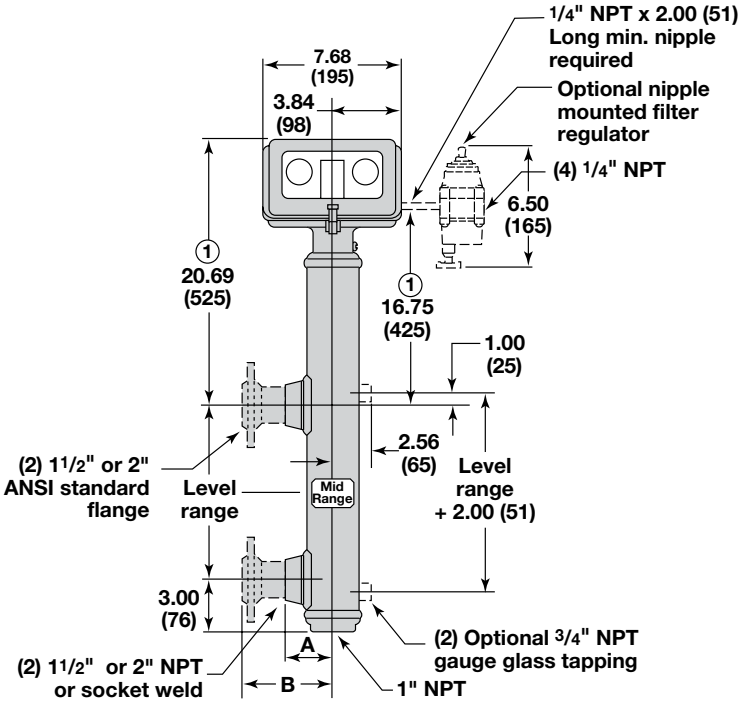

Figure 26

P72 Series with Side/Side Connections 150, 300, 600 lb. Class

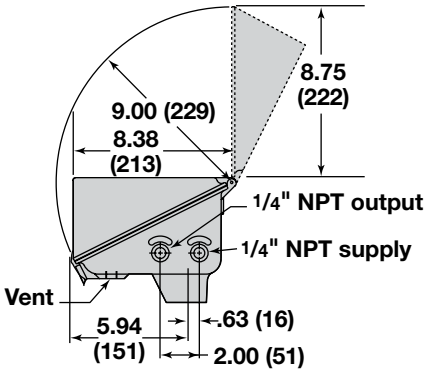

Controller Head (side view)

Outlet Size	Dimension A
1½" NPT or Socket Weld	3.19 (81)
2" NPT or Socket Weld	3.31 (84)

Outlet Size	Dimension B
1½" Flanged	6.25 (159)
2" Flanged	6.25 (159)

① Add 3.12 (79) for units with Specific Gravity Codes 4, 5 or 6.

600 lb. Pressure/temperature ratings

Temperature		Pressure	
°F	°C	psig	Bar
100	37.7	1440	99
200	93	1240	85
300	149	1120	77
400	204	1020	70
500	260	940	65
600	315	900	62
700	371	860	59

3.2.4 Models APM-131, APM-W251, APM-W254 and APM-W291 Dimensional Specifications

inches (mm)

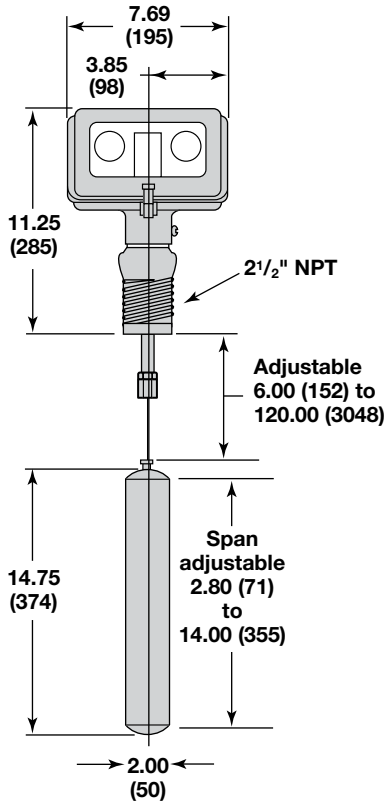

Figure 27
APM-131

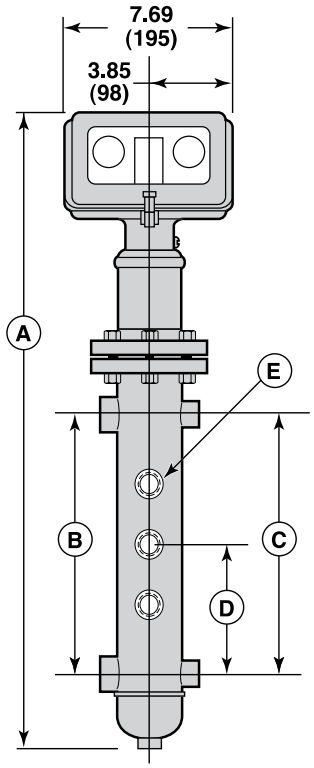

Figure 28
APM-W251 and APM-W291

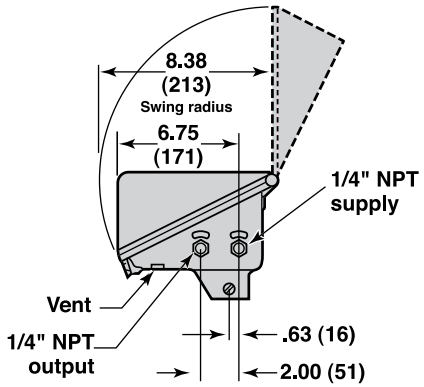

Figure 29
Controller Head (side view)

Catalog Number	A	B Gaugeglass centersand pipe size	C Drum connector centers and pipe size	D Mid range of throttling band	E Try-Cock tappings and pipe size
APM-W251	25.62	13.50 ½" NPT	13.50 1" NPT	6.00	Three ½" NPT
APM-W291	30.50	15.00 ¾" NPT	15.00 1¼" NPT	7.50	Three ¾" NPT

Dimensions are in inches and subject to change without notice. Certified and detailed submittal drawings are available from the factory.

3.2.5 Standard Side Mount Float Models P68 Dimensional Specifications

Inches (mm)

NOTE: Controller head may be rotated through 360°.

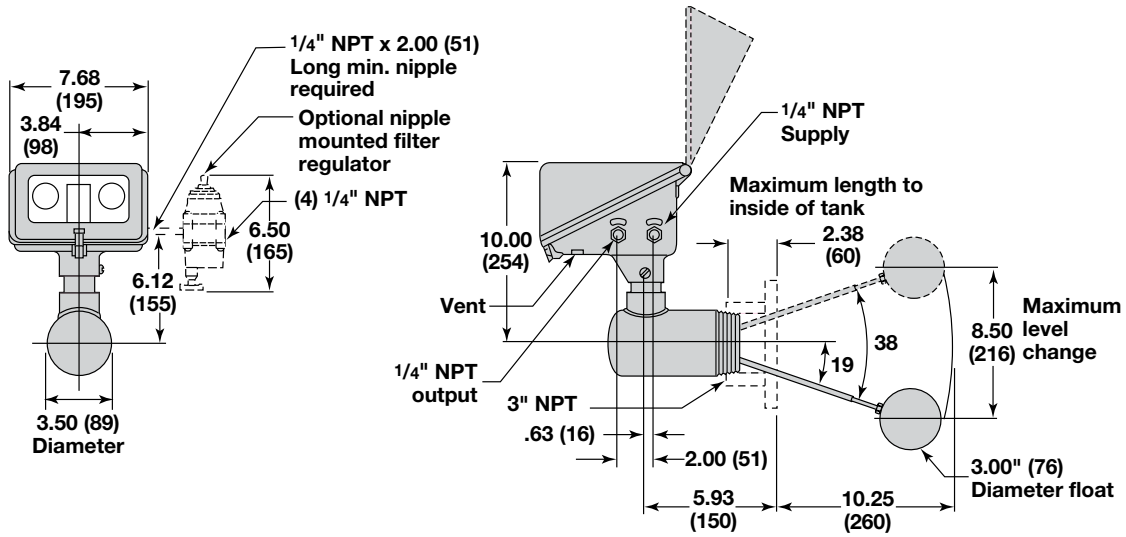

Figure 30
P68 Series with Threaded Side Mounting

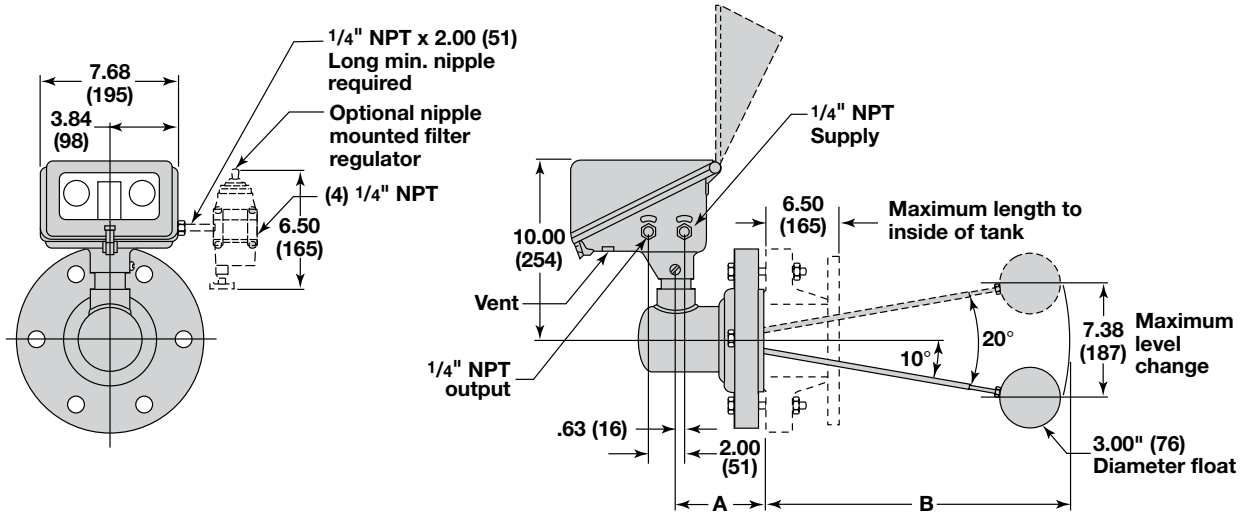

Figure 31
P68 Series with Flanged Side Mounting

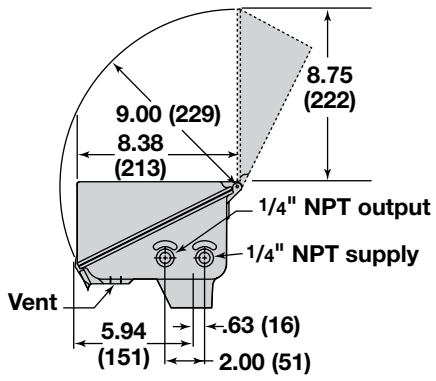

Controller Head (side view)

Flange Size and Class	Dim. A	Dim. B	No. of Bolt Holes	Dia. of Bolt Holes
4", 150 lb.	5.38 (137)	20.12 (511)	8	.75 (19)
4", 300 lb.	5.38 (137)	20.12 (511)	8	.88 (22)
4", 600 lb.	5.88 (149)	19.62 (498)	8	1.00 (25)

3.3 Replacement Parts

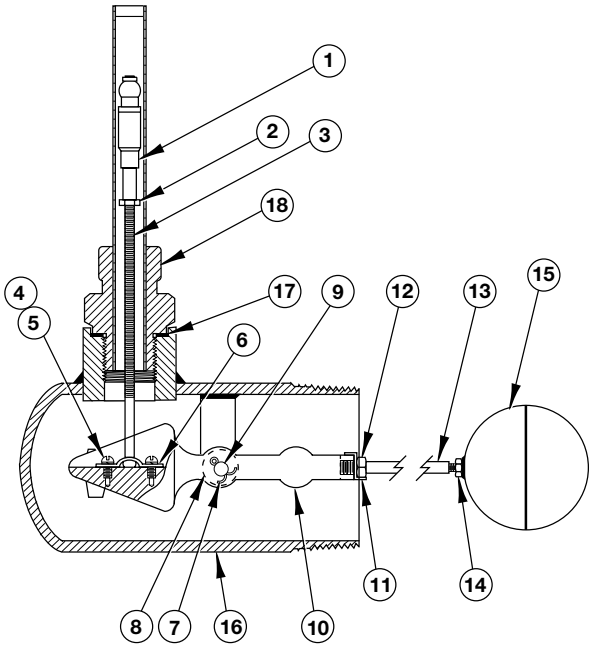

Figure 32
Typical Side Mounted Threaded Assembly

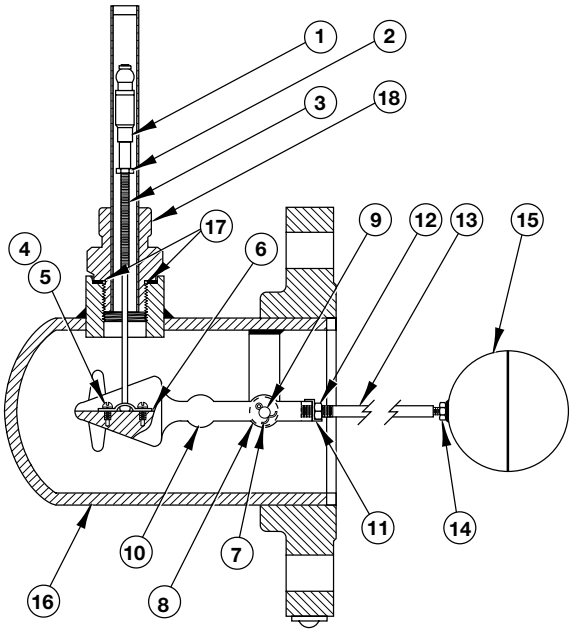

Figure 33
Typical Side Mounted Flanged Assembly

3.3.1 Model P68 Threaded and Flanged Parts Identification

Item	Description
1	Attraction sleeve
2	Hex nut #8-32
3	Stem
4	Stem retaining bracket
5	Screw #6-32
6	Bracket
7	Cotter pin
8	Washer
9	Pivot pin
10	Fulcrum
11	Lock washer
12	Hex nut #1/4-20
13	Stem
14	Hex nut #10-32
15	Float
16	Body
17	E-tube gasket
18	Enclosing tube

IMPORTANT:

When ordering replacement parts, please specify:
A. Model and serial number of control.
B. Name and number of replacement part.

3.3.1.1 Model P68-2F2A Threaded 3" NPT (See Figure 32)

	Sleeve and stem kit (includes items 1 through 14)	089-5562-001
15	Float	Z07-1102-005
16	Body	Z33-6120-003
17	E-tube gasket	012-1204-001
18	Enclosing tube	Z32-6201-006

3.3.1.2 Models P68-2H3A, P68-2H4A and P68-2H5A 4" Flanged (See Figure 33)

Item	Flanged cage	150#	300#	600#
	Sleeve and stem kit (includes items 1 through 14)		089-5562-002	
15	Float		Z07-1102-005	
16	Body	Z33-6118-001	Z33-6118-002	Z33-6118-002
17	E-tube gasket		012-1204-001	
18	Enclosing tube		Z32-6201-006	

IMPORTANT:

When ordering replacement parts, please specify:

A. Model and serial number of control.

B. Name and number of replacement part.

3.3.2 Model Series P6x Parts Identification

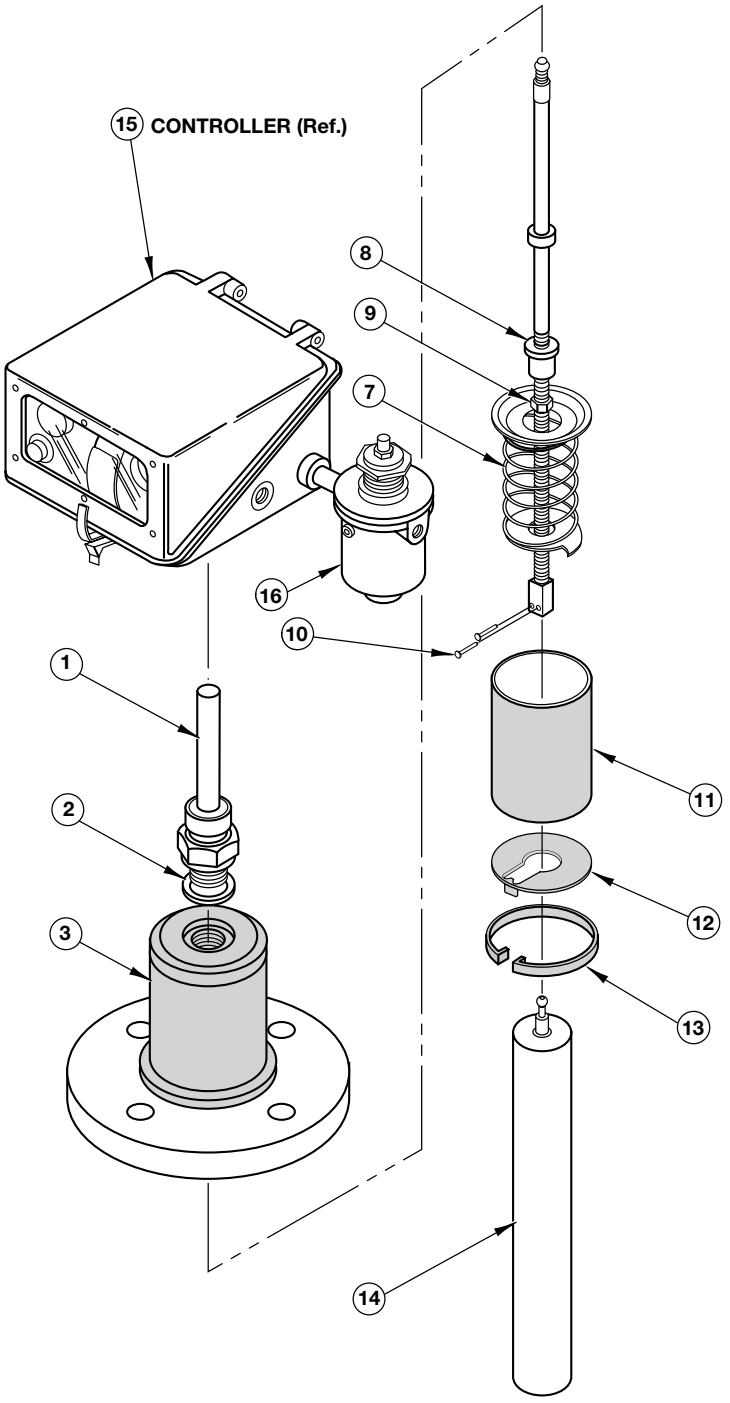

Figure 34
Typical Top Mounting Head Assembly
(Series P6x Shown)

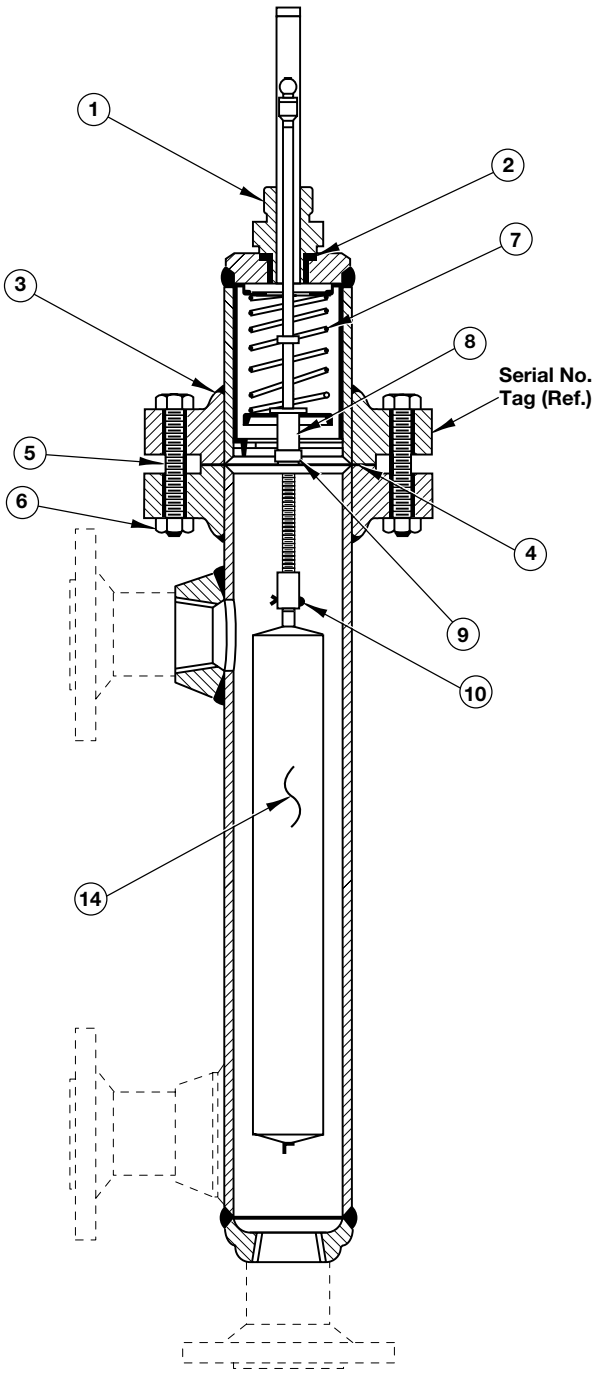

Figure 35
Typical Fabricated External Cage Assembly
(Series P6x Shown)

Items not furnished on Series P50.
Series P50 head flanges are ANSI standard.

3.3.2 Series P61, P62, P63, P64, P65, P66, P71 and P72 Parts Identification (See Figures 34 & 35)

Item	Description
1	Enclosing tube
2	Enclosing tube gasket
3	Mounting head kit
4	Head flange gasket
5	Studs
6	Hex nuts
7	Stem and spring kit
8	Adjusting sleeve
9	Jam nut
10	Cotter pins
11	Spacer tube
12	Stop ring
13	Stop
14	Displacer
15	Controller case only
16	Filter regulator
17	Gauge (not shown)

IMPORTANT:

When ordering replacement parts, please specify:

A. Model and serial number of control.

B. Name and number of replacement part.

3.3.2.1 Series P61, P62, P63, P64, P65, P66, P71 and P72 (See Figures 34 & 35)

Item			Part Number		
		Material		**400 °F Max.**	**700 °F Max**
1	Enclosing tube	C.S.		Z32-6201-006	Z32-6201-002
	Body	304		Z32-6201-007	Z32-6201-008
	E-tube gasket	316		Z32-6201-001	Z32-6201-003
2	Enclosing tube gasket			012-1204-001	
3	Mounting head kits			**Carbon Steel**	**Stainless Steel**
	150# flange 0.23 – 0.54 SG			089-4217-001	089-4238-001
	0.55 – 1.09 and 1.10 – 2.20 SG			089-4218-001	089-4238-002
	300# flange 0.23 – 0.54 SG			089-4219-001	089-4238-003
	0.55 – 1.09 and 1.10 – 2.20 SG			089-4220-001	089-4238-004
	600# flange 0.23 – 0.54 SG			089-4221-001	089-4238-005
	0.55 – 1.09 and 1.10 – 2.20 SG			089-4222-001	089-4238-006
			150#	**300#**	**600#**
4	Head flange gasket		012-1301-017	012-1301-018	012-1204-021
5	Studs		010-1701-004	010-1701-007	010-1701-020
			(4 required)	(8 required)	(8 required)
6	Hex nuts		010-2104-011	010-2104-012	010-2104-012
			(8 required)	(16 required)	(16 required)
			0.23 – 0.54 SG	0.55 – 1.09 SG	1.10 – 2.20 SG
7	Stem and spring kits 4th digits 1, 2 & 3		089-5533-001	089-5532-001	089-5531-001
	(+400 °F/+204 °C maximum)				
7	Stem and spring kits 4th digits 4, 5 & 6		089-5533-002	089-5532-002	089-5531-002
	(+700 °F/+371 °C maximum)				
8	Adjusting sleeve			004-5359-123	
9	Jam nut			010-2107-004	
10	Cotter pins			010-5203-001 (2 required)	
		Length	**0.23 – 0.54 SG and 0.55 – 1.09SG**		**1.10 – 2.20 SG**
14	Displacer	14"	089-6125-001		089-6126-001
		32"	089-6125-002		089-6126-002
		48"	089-6125-003		089-6126-003
		60"	089-6125-004		089-6126-004
		72"	089-6125-005		089-6126-005
		84"	089-6125-006		089-6126-006
		96"	089-6125-007		089-6126-007
		108"	089-6125-008		089-6126-008
		120"	089-6125-009		089-6126-009
15	Controller case only			Pneumatic 036-1006-001	
	Receiver			036-1006-004	
16	Filter regulator			006-9501-002	
	Gauge (not shown)			006-9501-003	
Adjustable Hanger			**Length (in)**	**Length (in)**	
Adjustable stainless suspension cable for flanged top mounting models			96	2.4	032-3110-001

3.3.3 Series P51, P53 and P55 Parts Identification (See Figures 34 & 35)

Item	Description
1	Enclosing tube
2	Enclosing tube gasket
3	Head flange
4	Head flange gasket
5	Studs
6	Hex nuts
7	Stem and spring kit
8	Adjusting sleeve
9	Jam nut
10	Cotter pins
11	Displacer
12	Controller case only
13	Filter regulator
14	Gauge (not shown)

IMPORTANT:

When ordering replacement parts, please specify:

A. Model and serial number of control.

B. Name and number of replacement part.

3.3.3.1 Series P51, P53 and P55 (See Figures 34 & 35)

Item				Part Number		
		Material		+700 °F Max		
1	Enclosing tube	C.S.		Z32-6206-001		
2	Enclosing tube gasket			012-1204-001		
			900# flange	1500# flange	2500# flange	
3	Head flange		Z04-8606-001	Z04-8606-002	Z04-8606-003	
4	Head flange gasket		012-1204-009	012-1204-010	012-1204-011	
5	Studs		010-1701-022 (4 required)	010-1701-017 (6 required)	010-1701-023 (8 required)	
6	Hex nuts		010-2104-016 (8 required)	010-2104-017 (12 required)	010-2104-019 (16 required)	
7	Stem and spring kit 0.55 – 1.09 SG			032-8120-002		
8	Adjusting sleeve			004-5359-123		
9	Jam nut			010-2107-004		
10	Cotter pins			010-5203-001 (2 required)		
		Length.		0.55 – 1.09 SG		
11	Displacer	14"		089-6125-010		
		32"		089-6125-011		
		48"		089-6125-012		
		60"		089-6125-013		
12	Controller case only			Pneumatic 036-1006-001		
				Receiver 036-1006-004		
13	Filter regulator			006-9501-002		
14	Gauge (not shown)			006-9501-003		

IMPORTANT:

When ordering replacement parts, please specify:

A. Model and serial number of receiver controller.

B. Name and number of replacement assembly (kit).

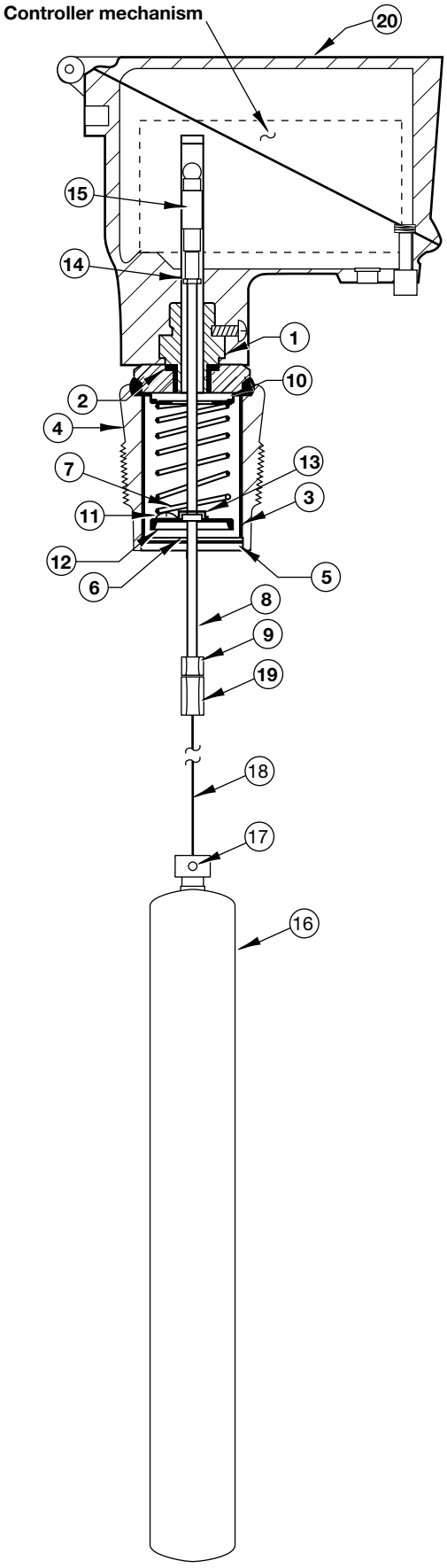

Figure 36
Typical Top Mounting Head Assembly

3.3.4 Model APM-131 Parts Identification

Item	Description
1	Enclosing tube
2	Gasket (E-tube)
3	Spacer tube
4	Mounting bushing
5	Snap ring
6	Stop washer
7	Range spring
8	Connecting link
9	Lock nut
10	Spring cup (upper)
11	Screw
12	Spring cup (lower)
13	Retaining bracket
14	Jam nut
15	Attraction ball & stem assembly
16	Displacer
17	Clamp screw
18	Displacer cable
19	Connector nut
20	Controller case only

3.3.4.1 Model APM-131 Part Number

1	Enclosing tube	Z32-6201-006
	Gasket (E-tube)	012-1204-001
2	Mounting bushing kit (includes items 2 through 5)	089-5703-001
	Stem and spring kit (includes items 5 through 15)	089-5505-001
	Displacer kit (includes items 16 through 19)	089-6106-001
20	Controller case only	036-1006-001

3.3.5 Models APM-W251, APM-W254 and APM-W291 Parts Identification

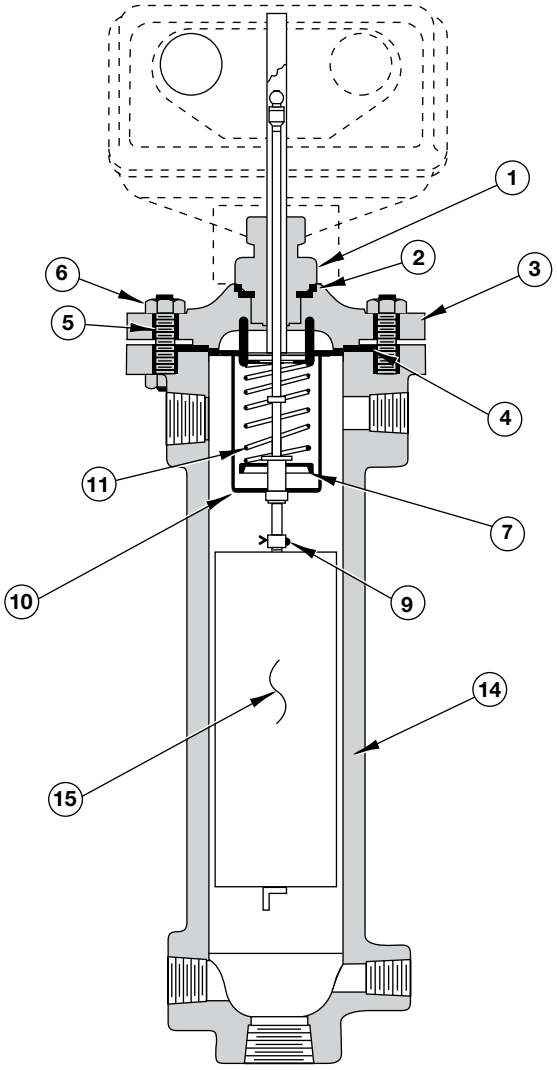

Figure 37
Typical Carbon Steel Fabricated External Cage Assembly

Item	Description
1	Enclosing tube C.S.
2	Enclosing tube gasket
3	Head flange
4	Head flange gasket
5	Studs
6	Hex nuts
7	Spring mounting plate
8	Jam nut (not shown)
9	Cotter pin
10	Spring cup
11	Spring & stem assembly
12	Attraction sleeve (not shown)
13	Screws (not shown)
14	Chamber assembly
15	Displacer
16	Chamber liner (not shown)
17	Filter regulator (not shown)
18	Gauge (not shown)
19	(unassigned)
20	Controller case only (shown on page 39)

IMPORTANT:
When ordering replacement parts, please specify:

A. Model and serial number of receiver controller.
B. Name and number of replacement assembly (kit).

3.3.5.1 Models APM-W251, APM-W254 and APM-W291 Parts Numbers

Model APM-W251 Part Number

1	Enclosing tube C.S.	Z32-6201-006
2	Enclosing tube gasket	012-1204-001
Head flange kit (includes items 3 through 6)		089-4202-001
Stem and spring kit (includes items 4, 8 through 14)		089-5320-001
9	Cotter pin	010-5202-005
14	Chamber assembly	089-4607-001
15	Displacer	Z07-5422-121
16	Chamber liner (not shown)	089-4403-001
17	Filter regulator (not shown)	006-9501-002
18	Gauge (not shown)	006-9501-003
19	(unassigned)	
20	Controller case only (shown on page 39)	036-1006-001

Model APM-W254 Part Number

1	Enclosing tube C.S.	Z32-6201-006
2	Enclosing tube gasket	012-1204-001
Head flange kit (includes items 3 through 6)		089-4202-001
Stem and spring kit (includes items 4, 8 through 14)		089-5320-001
9	Cotter pin	010-5202-005
14	Chamber assembly	089-4608-001
15	Displacer	Z07-5421-121
16	Chamber liner (not shown)	089-4404-001
17	Filter regulator (not shown)	006-9501-002
18	Gauge (not shown)	006-9501-003
19	(unassigned)	
20	Controller case only (shown on page 39)	036-1006-001

Model APM-W291 Part Number

1	Enclosing tube C.S.	Z32-6201-006
2	Enclosing tube gasket	012-1204-001
Head flange kit (includes items 3 through 6)		089-4203-001
Stem and spring kit (includes items 4, 8 through 14)		089-5320-001
9	Cotter pin	010-5202-005
14	Chamber assembly	Z33-1004-001
15	Displacer Chamber liner (not shown)	Z07-5421-121
17	Filter regulator (not shown)	006-9501-002
18	Gauge (not shown)	006-9501-003
19	(unassigned)	
20	Controller case only (shown on page 39)	036-1006-001

3.3.6 Controller Parts

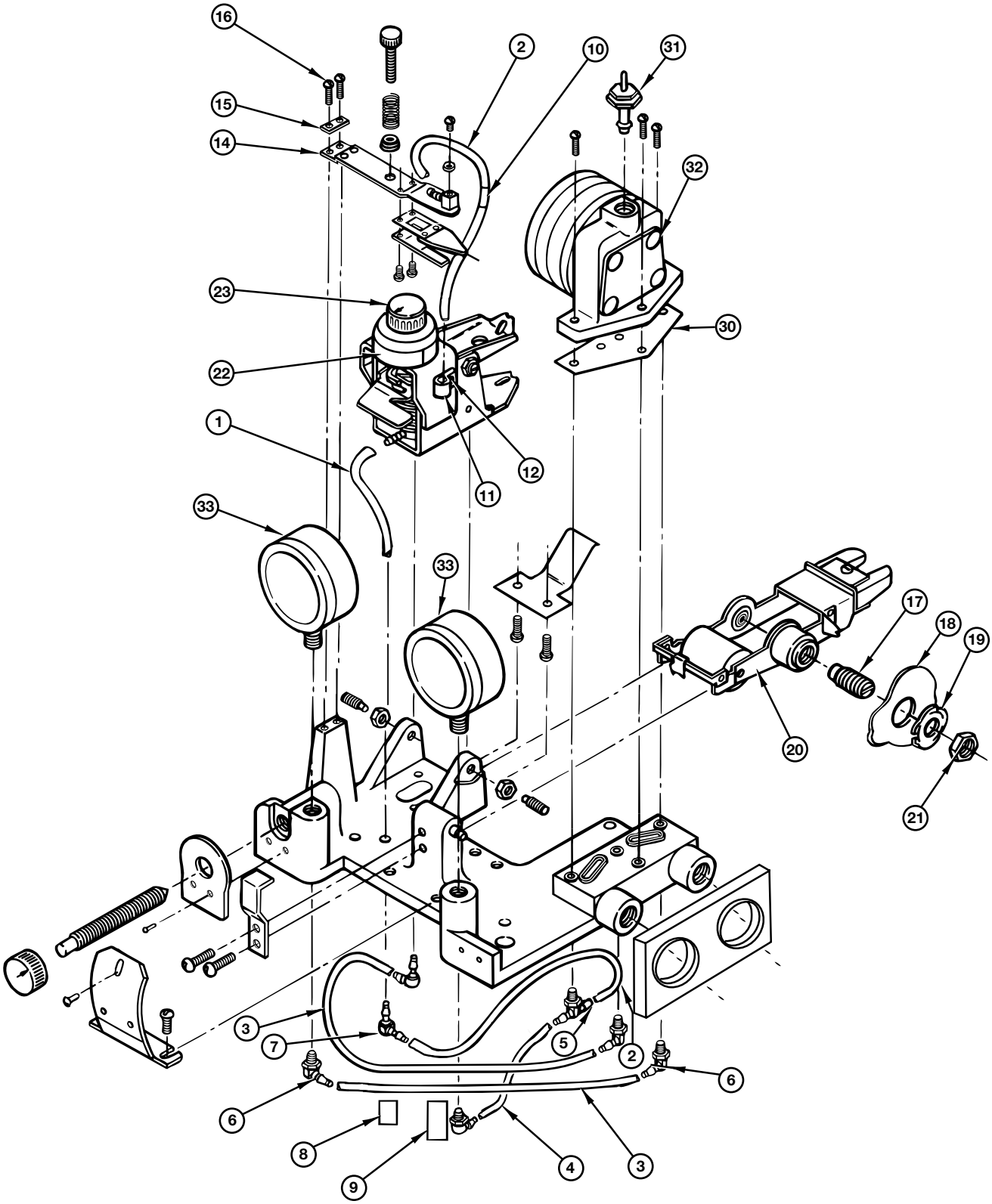

Figure 38
Controller Replacement Parts

3.3.6.1 Controller Replacement Assemblies Parts Identification (See Figures 38 & 39)

Item	Description
1	Tube, 2.25" length ⑦
2	Tube, 4.75" length ⑦
3	Tube, 7.75" length ⑦
4	Tube, 3.13" length ⑦
5	Barbed tee ⑧
6	Barbed elbow ⑧
7	Tube elbow ⑧
8	Silicone tape, 1.25" length
9	Silicone tape, 2.00" length
10	Silicone tape, .75" length
11	Cable clamp
12	#10-32 × .25 round head screw
13	Tube, 30" length ⑦
14	Nozzle level assembly
15	Plate
16	#4-40 × .25 round head screw
17	Bridge adjustment screw assembly
18	Selector cam
19	Spring washer
20	Magnetic carriage assembly
21	Palnut
22	Nameplate
23	Feedback assembly
24	Gasket
25	O-ring, Viton®
26	O-ring, Viton®
27	O-ring, Viton®
28	O-ring, Viton®
29	Gasket
30	Gasket, relay mounting
31	Wiper assembly
32	Relay assembly
33	Pressure gauge

NOTE:

Replacement assemblies listed are furnished in pre-assembled kit form only for standard temperature model proportional (P), proportional/reset (PR), differential gap (D), and transmitter (T) pneumatic controllers.

3.3.6.2 Tubing Kit 089-8501-015 ① @ 3-15 and 6-30 psig (See Figure 38)

Item		Qty.
1	Tube, 2.25" length ②⑦	1
2	Tube, 4.75" length ②⑦	2
3	Tube, 7.75" length ②⑦	2
4	Tube, 3.13" length ②⑦	1
5	Barbed tee ⑧	1
6	Barbed elbow ⑧	4
7	Tube elbow ⑧	2
8	Silicone tape, 1.25" length	1
9	Silicone tape, 2.00" length	1
10	Silicone tape, .75" length	1
11	Cable clamp	1
12	#10-32 × .25 round head screw	1
13	Tube, 30" length ②⑦	1

3.3.6.3 Nozzle Lever Kit 089-8501-002@ 3-15 and 6-30 psig (See Figure 38)

Item		Qty.
10	Silicone tape, .75" length	1
11	Cable clamp	1
12	#10-32 × .25 round head screw	1
13	Tube, 4.75" length ②⑦	1
14	Nozzle level assembly	1
15	Plate	1
16	#4-40 x .25 round head screw	2

3.3.6.4 Carriage Assembly Kit 089-8501-003 ③ @ 3-15 and 6-30 psig (See Figure 38)

Item		Qty.
17	Bridge adjustment screw assembly	1
18	Selector cam	1
19	Spring washer	1
20	Magnetic carriage assembly	1
21	Palnut	1

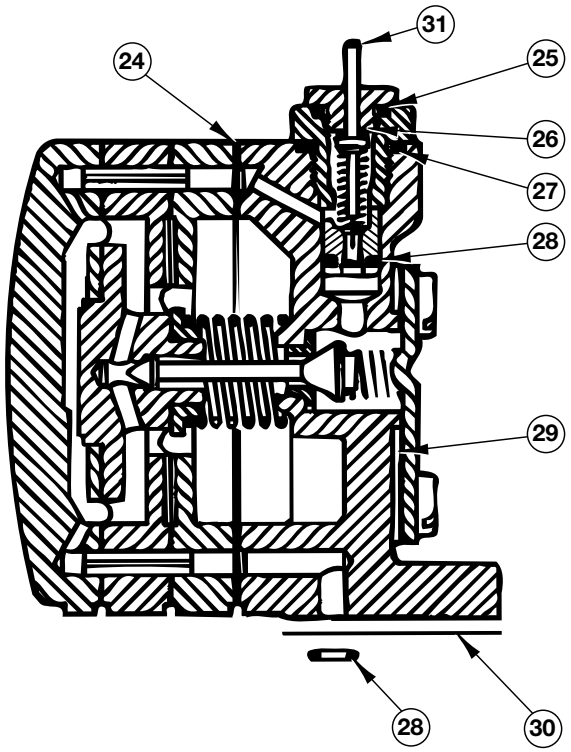

Figure 39
Relay Assembly (Item 32)

3.3.6.5 Feedback Assembly Kit 089-8501-005 @ 3–15 psig and 89-8501-006 @ 6–30 psig (See Figure 38)

Item		Qty.
1	Tube, 7.50" length ②⑦	1
22	Nameplate ④	1
23	Feedback assembly	1

3.3.6.6 Gasket Kit for Relay Assembly 089-8501-014 @ 3–15 psig and 6–30 psig (See Figure 39)

Item		Qty.
24	Gasket	1
25	O-Ring, Viton®	1
26	O-Ring, Viton®	1
27	O-Ring, Viton®	1
28	O-Ring, Viton® ⑤	2
29	Gasket	1
30	Gasket, relay mounting	1

3.3.6.7 Additional Replacement Parts (See Figures 38 & 39)

Item		Qty.	3-15 psig	6-30 psig
33	Pressure gauge	1	006-8112-030	006-8112-060
31	Wiper assembly	1	089-7833-001	
32	Relay assembly ⑥	1	089-7803-001	

NOTES:

① Tubing kit 089-8501-015 contains brass fittings. Controller heads with reset require four compression rings. All others require two. Consult factory for units with plastic fittings.

② Customer is to cut tube lengths to correspond to those previously supplied on the unit.

③ Carriage assembly kit part number 089-8501-004 for Model P68 only.

④ Appropriate nameplate to be applied by customer, depending on application.

⑤ Used only when mating surface has counter bore, otherwise discard.

⑥ Relay assembly includes wiper assembly.

⑦ Clear tubing does not require compression ring (as did older white tubing).

⑧ Plastic settings are obsolete. Call factory for replacement parts. Brass fittings are now supplied.

IMPORTANT:

When ordering replacement parts, please specify:

A. Model and serial number of receiver controller.

B. Name and number of replacement assembly (kit).

3.3.7 Reset Replacement Parts

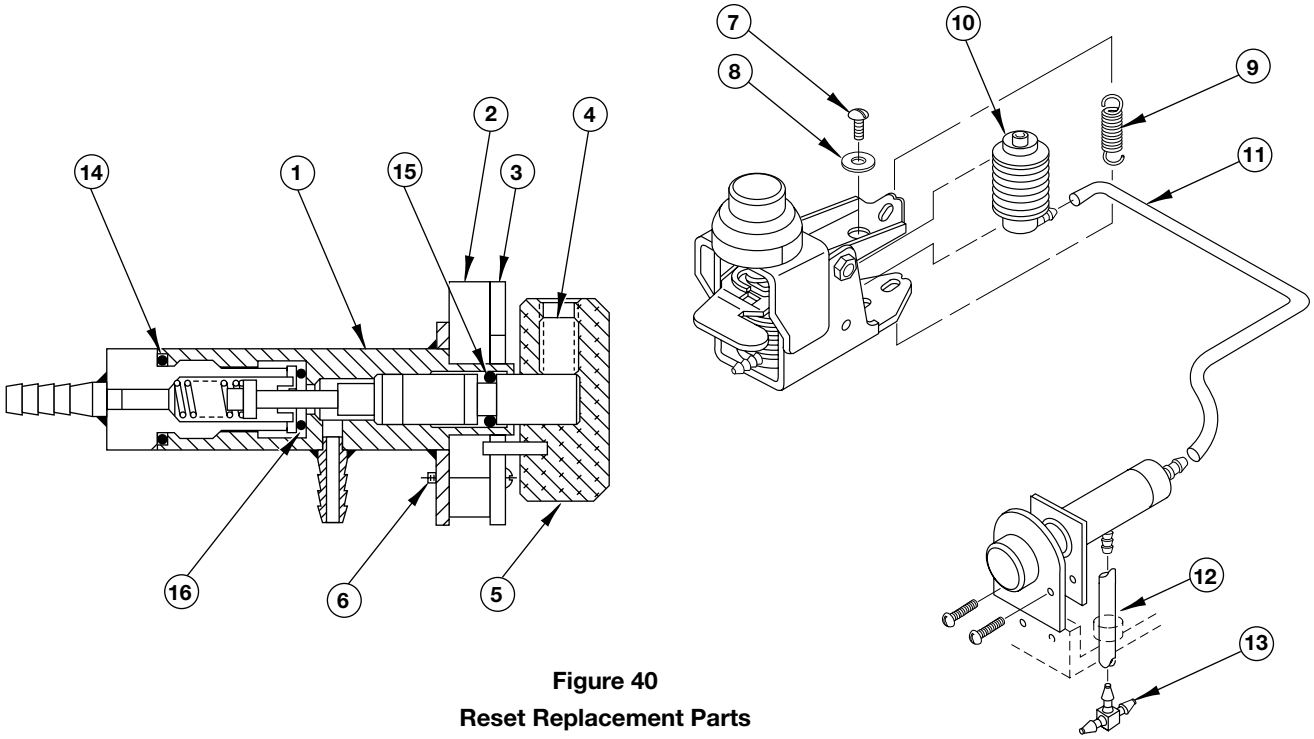

Figure 40
Reset Replacement Parts

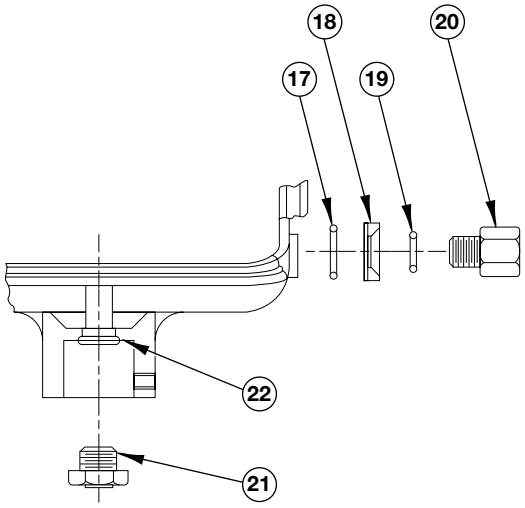

Figure 41
Offshore Kit

3.3.7.1 Reset Replacement Assemblies (See Figures 40 & 41)

Item	Qty.	Description
1	1	Valve assembly
2	1	Spacer
3	1	Dial
4	1	Set screw
5	1	Knob assembly
6	2	#2-56 × .33 round head screw
7	1	#4-40 × 16 bridge head screw
8	1	Washer
9	1	Spring, bias
10	1	Bellows assembly
11	1	Tube 8.50" length ③
12	1	Tube .81" length ③
13	1	Barbed tube tee ④
14	1	O-Ring, Viton®
15	1	O-Ring, Viton®
16	1	O-Ring, Viton®
17	1	O-Ring, Viton®
18	2	Seal washer
19	2	O-Ring, Viton®
20	2	Adapter
21	1	Air relief valve
22	1	O-Ring, Viton®

3.3.7.2 Replacement Kits (See Figures 40 & 41)

	3-15 psig	6-30 psig
Reset valve kit ① includes items 1 through 13	089-8501-008	089-8501-009
O-ring kit includes items 14 through 16	089-8501-010	
Offshore kit ② includes items 17 through 22	089-8501-007	

NOTE:

① Replacement assemblies listed are furnished in preassembled kit form only, complete with gaskets for field installation.

② The offshore kit allows air to exit the controller case while preventing air intake to the unit.

③ Clear tubing does not require compression ring (as did older white tubing).

④ Plastic settings are obsolete. Call factory for replacement parts. Brass fittings are now supplied.

IMPORTANT:

When ordering replacement parts, please specify:

A. Model and serial number of receiver controller.
B. Name and number of replacement assembly (kit).

NOTE:

Replacement assemblies listed are furnished in preassembled kit form only for standard temperature model proportional (P), proportional/reset (PR), differential gap (D), and transmitter (T) pneumatic controllers.

3.3.8 Receiver Controller Parts (See Figure 42)

Item	Qty.	Description
1	1	Nozzle lever
2	1	Bushing
3	1	Adjustment screw
4	1	Spring
5	2	#4-40 round head screw
6	1	Plate
7	1	#2-56 flat head screw
8	1	O-Ring, Viton®
9	1	Tube 7.75" length ①
10	1	Tape, silicone
11	2	#8-32 round head screw
12	1	Tube 4.75" length ①
13	1	Inlet connector
14	1	Input module

3.3.8.1 Receiver Controller Replacement Assemblies (See Figure 42)

	3-15 psig	6-30 psig
Receiver controller nozzle lever kit includes items 1 through 10	089-8501-011	
Input module kit includes items 11 through 14	089-8501-012	089-8501-013

NOTE:

① Clear tubing does not require compression ring (as did older white tubing).

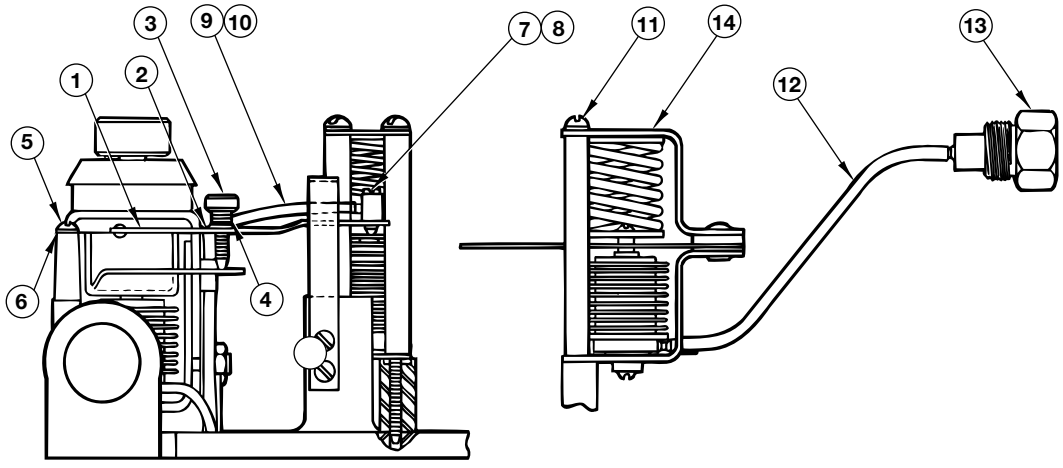

Figure 42
Receiver Controller Parts

3.3.9 Transmitter Mounted Receiver Controller Parts

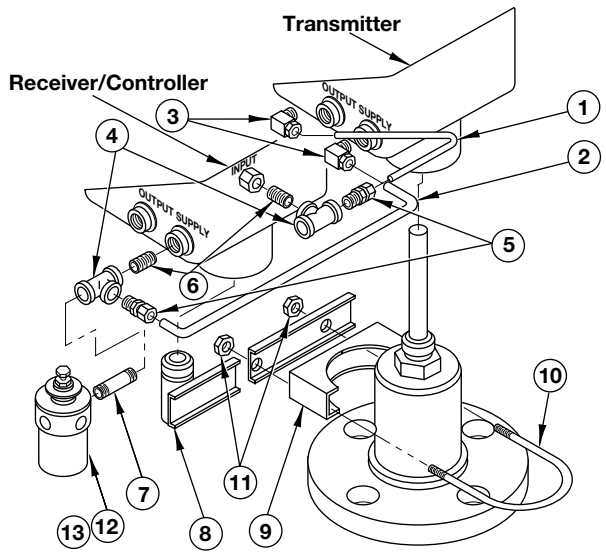

Figure 43
Transmitter Mounted Receiver Controllers
(Configuration A Shown)

3.3.9.1 Transmitter Mounted Receiver Controller Replacement Assemblies (See Figure 43)

		Replacement Assemblies			
		Configuration A		Configuration B (not shown)	
Item		Qty.	Part No.	Qty.	Part No.
1	Output tube (item 1)	1	Consult Factory	1	Consult Factory
2	Supply tube (item 2)	1	Consult Factory	1	Consult Factory
3	Male elbow (item 3)	2	011-4102-042	3	011-4102-042
4	Tee (item 4)	2	011-2212-001	2	011-2212-001
5	Male connector (item 5)	2	011-4707-002	1	011-4707-002
6	⅞" Close Nipple (item 6)	2	011-1102-007	1	011-1102-007
7	1¾" nipple (item 7)	1	011-1102-016	2	011-1102-016
8	Bracket assembly (item 8)	1	036-3802-001	1	036-3802-001
	Saddle, U-bolt, hex nuts (items 9 through 11)	1	010-1706-001	1	010-1706-001
12	Filter regulator (item 12)	1	006-9501-002	2	006-9501-002
13	Gauge (item 13 – not shown)	1	006-9501-003	2	006-9501-003

CONFIGURATION:

A. For receiver-controller installation on transmitter with same input/output range.

B. For receiver-controller installation on transmitter with different input/output range, requiring use of two filter regulators.

3.3.10 Pneumatic Modulevel Replacement Head Kits

8th, 9th & 10th digits	Function	Supply Pressure	Output	Action	Limit* Switches	0.23-0.54	SG Ranges** 0.55-1.09	1.10-2.20
PAA	proportional	20 psig	3–15 psig	direct	no	**089-8502-001**	**089-8502-033**	**089-8502-065**
PAB	proportional	35 psig	6–30 psig	direct	no	**089-8502-002**	**089-8502-034**	**089-8502-066**
PBA	prop. w/reset	20 psig	3–15 psig	direct	no	**089-8502-003**	**089-8502-035**	**089-8502-067**
PBB	prop. w/reset	35 psig	6–30 psig	direct	no	**089-8502-004**	**089-8502-036**	**089-8502-068**
PCA	transmitter	20 psig	3–15 psig	direct	no	**089-8502-005**	**089-8502-037**	**089-8502-069**
PCB	transmitter	35 psig	6–30 psig	direct	no	**089-8502-006**	**089-8502-038**	**089-8502-070**
PDA	differential gap	20 psig	0 or 20 psig	direct	no	**089-8502-007**	**089-8502-039**	**089-8502-071**
PDB	differential gap	35 psig	0 or 35 psig	direct	no	**089-8502-008**	**089-8502-040**	**089-8502-072**
PIA	proportional	20 psig	3–15 psig	direct	yes	**089-8502-017**	**089-8502-049**	**089-8502-081**
PIB	proportional	20 psig	6–30 psig	direct	yes	**089-8502-018**	**089-8502-050**	**089-8502-082**
PJA	prop. w/reset	20 psig	3–15 psig	direct	yes	**089-8502-019**	**089-8502-051**	**089-8502-083**
PJB	prop. w/reset	35 psig	6–30 psig	direct	yes	**089-8502-020**	**089-8502-052**	**089-8502-084**
PKA	transmitter	20 psig	3–15 psig	direct	yes	**089-8502-021**	**089-8502-053**	**089-8502-085**
PKB	transmitter	45 psig	6–30 psig	direct	yes	**089-8502-022**	**089-8502-054**	**089-8502-086**
PLA	differential gap	20 psig	0 or 20 psig	direct	no	**089-8502-023**	**089-8502-055**	**089-8502-087**
PLB	differential gap	35 psig	0 or 35 psig	direct	no	**089-8502-024**	**089-8502-056**	**089-8502-088**
PEA	proportional	20 psig	3–15 psig	reverse	no	**089-8502-009**	**089-8502-041**	**089-8502-073**
PEB	proportional	35 psig	6–30 psig	reverse	no	**089-8502-010**	**089-8502-042**	**089-8502-074**
PFA	prop. w/reset	20 psig	3–15 psig	reverse	no	**089-8502-011**	**089-8502-043**	**089-8502-075**
PFB	prop. w/reset	35 psig	6–30 psig	reverse	no	**089-8502-012**	**089-8502-044**	**089-8502-076**
PGA	transmitter	20 psig	3–15 psig	reverse	no	**089-8502-013**	**089-8502-045**	**089-8502-077**
PGB	transmitter	35 psig	6–30psig	reverse	no	**089-8502-014**	**089-8502-046**	**089-8502-078**
PHA	differential gap	20 psig	0 or 20 psig	reverse	no	**089-8502-015**	**089-8502-047**	**089-8502-079**
PHB	differential gap	35 psig	0 or 35 psig	reverse	no	**089-8502-016**	**089-8502-048**	**089-8502-080**
PMA	proportional	20 psig	3–15 psig	reverse	yes	**089-8502-025**	**089-8502-057**	**089-8502-089**
PMB	proportional	35 psig	6–30 psig	reverse	yes	**089-8502-026**	**089-8502-058**	**089-8502-090**
PNA	prop. w/reset	20 psig	3–15 psig	reverse	yes	**089-8502-027**	**089-8502-059**	**089-8502-091**
PNB	prop. w/reset	35 psig	6–30 psig	reverse	yes	**089-8502-028**	**089-8502-060**	**089-8502-092**
POA	transmitter	20 psig	3–15 psig	reverse	yes	**089-8502-029**	**089-8502-061**	**089-8502-093**
POB	transmitter	35 psig	6–30 psig	reverse	yes	**089-8502-030**	**089-8502-062**	**089-8502-094**
PPA	differential gap	20 psig	0 or 20 psig	reverse	yes	**089-8502-031**	**089-8502-063**	**089-8502-095**
PPB	differential gap	35 psig	0 or 35 psig	reverse	yes	**089-8502-032**	**089-8502-064**	**089-8502-096**

* C/F for limit switch replacement Z37-4517-001.

** Verify that the 8th, 9th, and 10th digits are valid for the specific model.

3.3.10 Pneumatic Modulevel Replacement Head Kits (cont.)

8th, 9th & 10th digits	Function	Supply Pressure	Output	Action	Limit* Switches	SG Ranges 0.23-0.54	0.55-1.09	1.10-2.20
RAA*	proportional	20 psig	3–15 psig	direct	no	**089-8502-129**	**089-8502-145**	**089-8502-161**
RAB*	proportional	35 psig	6–30 psig	direct	no	**089-8502-130**	**089-8502-146**	**089-8502-162**
RBA*	prop. w/reset	20 psig	3–15 psig	direct	no	**089-8502-131**	**089-8502-147**	**089-8502-163**
RBB*	prop. w/reset	35 psig	6–30 psig	direct	no	**089-8502-132**	**089-8502-148**	**089-8502-164**
REA*	transmitter	20 psig	3–15 psig	reverse	no	**089-8502-133**	**089-8502-149**	**089-8502-165**
REB*	transmitter	35 psig	6–30 psig	reverse	no	**089-8502-134**	**089-8502-150**	**089-8502-166**
RFA*	prop. w/reset	20 psig	3–15 psig	reverse	no	**089-8502-135**	**089-8502-151**	**089-8502-167**
RFB*	prop. w/reset	35 psig	6–30 psig	reverse	no	**089-8502-136**	**089-8502-152**	**089-8502-168**
TAA	proportional	20 psig	3–15 psig	direct	no	**089-8502-137**	**089-8502-153**	**089-8502-169**
TAB*	proportional	20 psig	6–30 psig	direct	no	**089-8502-138**	**089-8502-154**	**089-8502-170**
TBA*	prop. w/reset	20 psig	3–15 psig	direct	no	**089-8502-139**	**089-8502-155**	**089-8502-171**
TBB*	prop. w/reset	35 psig	6–30 psig	direct	no	**089-8502-140**	**089-8502-156**	**089-8502-172**
TEA*	transmitter	20 psig	3–15 psig	reverse	no	**089-8502-141**	**089-8502-157**	**089-8502-173**
TEB*	transmitter	35 psig	6–30 psig	reverse	no	**089-8502-142**	**089-8502-158**	**089-8502-174**
TFA*	prop. w/reset	20 psig	3–15 psig	reverse	no	**089-8502-143**	**089-8502-159**	**089-8502-175**
TFB*	prop. w/reset	35 psig	6–30 psig	reverse	no	**089-8502-144**	**089-8502-160**	**089-8502-176**
PAJ	proportional	20 psig	3–15 psig	direct	no	—	**089-8502-097**	—
PAK	proportional	35 psig	6–30 psig	direct	no	—	**089-8502-098**	—
PBJ	prop. w/reset	20 psig	3–15 psig	direct	no	—	**089-8502-099**	—
PBK	prop. w/reset	35 psig	6–30 psig	direct	no	—	**089-8502-100**	—
PCJ	transmitter	20 psig	3–15 psig	direct	no	—	**089-8502-101**	—
PCK	transmitter	35 psig	6–30 psig	direct	no	—	**089-8502-102**	—
PDJ	differential gap	20 psig	0 or 20 psig	direct	no	—	**089-8502-103**	—
PDK	differential gap	35 psig	0 or 35 psig	direct	no	—	**089-8502-104**	—
PEJ	proportional	20 psig	3–15 psig	reverse	no	—	**089-8502-105**	—
PEK	proportional	35 psig	6–30 psig	reverse	no	—	**089-8502-106**	—
PFJ	prop. w/reset	20 psig	3–15 psig	reverse	no	—	**089-8502-107**	—
PFK	prop. w/reset	35 psig	6–30 psig	reverse	no	—	**089-8502-108**	—
PGJ	transmitter	20 psig	3–15 psig	reverse	no	—	**089-8502-109**	—
PGK	transmitter	35 psig	6–30 psig	reverse	no	—	**089-8502-110**	—
PHJ	differential gap	20 psig	0 or 20 psig	reverse	no	—	**089-8502-111**	—
PHK	differential gap	35 psig	0 or 35 psig	reverse	no	—	**089-8502-112**	—

* Kits for receiver controllers include both heads.

3.4 Model Numbers

3.4.1 Standard Flanged Top and Flanged Cage Displacer Models

DESIGN TYPE

P 6	Standard design Pneumatic Modulevel

MOUNTING AND CHAMBER MATERIALS

flanged top ①		cage side/bottom		cage side/side		tank connection
steel	316 SS	steel	316 SS	steel	316 SS	chamber material
1	2	3	4	5	6	code

① Adjustable 8' hanger cable (p/n 32-3110-001), required when distance from flange face to top of displacer must be greater than 5.00"

SPECIFIC GRAVITY AND PROCESS TEMPERATURE

+400 °F (+204 °C)	+700 °F (+371 °C) ②	maximum temperature
1	4	0.23 – 0.54 specific gravity
2	5	0.55 – 1.09 specific gravity
3	6	1.10 – 2.20 specific gravity

② Inconel spring furnished on models P62, P64 and P66 with codes 4, 5, or 6

TANK CONNECTION

TOP MOUNTED CONNECTION TYPE

ANSI Head Flange rating			
RF150lbs	RF300lbs	RF 600 lbs ③	Size
G3	G4	G5	3"
H3	H4	H5	4"
K3	K4	K5	6"

EXTERNAL CAGE MODELS

ANSI Cage rating			
RF150lbs	RF300lbs	RF 600 lbs ③	Size / Type
C5	C7	C9	1½" NPT
C6	C8	C0	1½" S.W.
P3	P4	P5	1½" flanged
D5	D7	D9	2" NPT
D6	D8	D0	2" S.W.
Q3	Q4	Q5	2" flanged

③ Maximum pressure rating for units with 600 lb. ANSI flange construction is 1330 psi @ 100 °F (967 bar @ 38 °C).

LEVEL RANGE

14 356	32 813	48 1219	60 1524	72 1829	84 2134	96 2438	108 2743	120 3048	inches mm
A	B	C	D	E	F	G	H	I	CODE

PNEUMATIC INSTRUMENT (see opposite page)

P	**6**		–					–			

Complete order code for Standard Pneumatic Modulevel

3.4.1 Standard Flanged Top and Flanged Cage Displacer Models (continued)

PNEUMATIC INSTRUMENT Single Function Heads						
Direct Acting		**Reverse Acting**				
Std	**Limit Sws**	**Std**	**Limit Sws**	**Function**	**Output**	**Mounting**
PAA	PIA	PEA	PMA	Proportional	3–15 psig	Integral
PAB	PIB	PEB	PMB	Proportional	6–30 psig	Integral
PBA	PJA	PFA	PNA	Proportional w/reset	3–15 psig	Integral
PBB	PJB	PFB	PNB	Proportional w/reset	6–30 psig	Integral
PCA	PKA	PGA	POA	Transmitter	3–15 psig	Integral
PCB	PKB	PGB	POB	Transmitter	6–30 psig	Integral
PDA	PLA	PHA	PPA	Differential Gap	0–20 psig	Integral
PDB	PLB	PHB	PPB	Differential Gap	0–35 psig	Integral
TRANSMITTER/RECEIVER CONTROLLER Dual Heads						
Direct Acting		**Reverse Acting**				
Std	Limit Sws	Std	Limit Sws	Function	Output	Mounting
RAA	—	REA	—	Proportional	3–15 psig	Integral
RAB	—	REB	—	Proportional	6–30 psig	Integral
RBA	—	RFA	—	Proportional w/reset	3–15 psig	Integral
RBB	—	RFB	—	Proportional w/reset	6–30 psig	Integral
TAA	—	TEA	—	Proportional	3–15 psig	Remote
TAB	—	TEB	—	Proportional	6–30 psig	Remote
TBA	—	TFA	—	Proportional w/reset	3–15 psig	Remote
TBB	—	TFB	—	Proportional w/reset	6–30 psig	Remote

3.4.2 High Pressure Flanged Top and Flanged Cage Displacer Models

DESIGN TYPE

P 5	High pressure design Pneumatic Modulevel

MOUNTING AND CHAMBER MATERIALS ①

flanged top ②	cage side/bottom	cage side/side	tank connection
steel	steel	steel	chamber material
1	3	5	code

① P50 Series displacer material is 304 stainless steel.
② Adjustable 8' hanger cable (p/n 32-3110-001), required when distance from flange face to top of displacer must be greater than 9.31."

SPECIFIC GRAVITY AND PROCESS TEMPERATURE

+700 °F (+371 °C)	maximum temperature
5	0.55 – 1.09 specific gravity

TANK CONNECTION

TOP MOUNTED CONNECTION TYPE

ANSI Head Flange rating			
RF900lbs	RF1500lbs	RF2500lbs	Size
H6	H7	H8	4"

EXTERNAL CAGE MODELS

ANSI Cage rating			
RF900lbs	RF1500lbs	RF2500lbs	Size / Type
L5	L7	L9	1½" NPT
M5	M7	M9	1½" S.W.
P6	P7	P8	1½" flanged
L6	L8	L0	2" NPT
M6	M8	M0	2" S.W.
Q6	Q7	Q8	2" flanged

LEVEL RANGE

14 356	32 813	48 1219	60 1524	inches mm
A	B	C	D	CODE

PNEUMATIC INSTRUMENT

P	5		–	5				–			

Complete order code for High Pressure Pneumatic Modulevel

3.4.2 High Pressure Flanged Top and Flanged Cage Displacer Models (continued)

PNEUMATIC INSTRUMENT Single Function Heads						
Direct Acting		**Reverse Acting**				
Std	Limit Sws	Std	Limit Sws	Function	Output	Mounting
PAA	**PIA**	**PEA**	**PMA**	Proportional	3–15 psig	Integral
PAB	**PIB**	**PEB**	**PMB**	Proportional	6–30 psig	Integral
PBA	**PJA**	**PFA**	**PNA**	Proportional w/reset	3–15 psig	Integral
PBB	**PJB**	**PFB**	**PNB**	Proportional w/reset	6–30 psig	Integral
PCA	**PKA**	**PGA**	**POA**	Transmitter	3–15 psig	Integral
PCB	**PKB**	**PGB**	**POB**	Transmitter	6–30 psig	Integral
PDA	**PLA**	**PHA**	**PPA**	Differential Gap	0–20 psig	Integral
PDB	**PLB**	**PHB**	**PPB**	Differential Gap	0–35 psig	Integral
TRANSMITTER/RECEIVER CONTROLLER Dual Heads						
Direct Acting		**Reverse Acting**				
Std	Limit Sws	Std	Limit Sws	Function	Output	Mounting
RAA	—	**REA**	—	Proportional	3–15 psig	Integral
RAB	—	**REB**	—	Proportional	6–30 psig	Integral
RBA	—	**RFA**	—	Proportional w/reset	3–15 psig	Integral
RBB	—	**RFB**	—	Proportional w/reset	6–30 psig	Integral
TAA	—	**TEA**	—	Proportional	3–15 psig	Remote
TAB	—	**TEB**	—	Proportional	6–30 psig	Remote
TBA	—	**TFA**	—	Proportional w/reset	3–15 psig	Remote
TBB	—	**TFB**	—	Proportional w/reset	6–30 psig	Remote

3.4.3 Standard Sealed Cage Displacer Models

DESIGN TYPE

P 7	Sealed cage design Pneumatic Modulevel

MOUNTING AND CHAMBER MATERIALS ①

Carbon steel ①		Chamber material
side/bottom	side/side	tank connections
1	2	code

① Inconel spring furnished on all models.

SPECIFIC GRAVITY AND PROCESS TEMPERATURE

+400 °F (+200 °C)	+700 °F (+371 °C)	Maximum temperature
1	4	0.23 – 0.54 specific gravity
2	5	0.55 – 1.09 specific gravity
3	6	1.10 – 2.20 specific gravity

TANK CONNECTION

EXTERNAL CAGE MODELS

ANSI Head Flange rating					
NPT	SW	RF150lbs	RF300lbs	RF600lbs ②	Size
C9	C0	P3	P4	P5	1½"
D9	D0	Q3	Q4	Q5	2"

② Maximum pressure rating for units with 600 lb. ANSI flange construction is 1330 psi @ 100 °F (967 bar @ 38 °C).

LEVEL RANGE

14 356	32 813	48 1219	60 1524	72 1829	84 2134	96 2438	108 2743	120 3048	inches mm
A	B	C	D	E	F	G	H	I	CODE

PNEUMATIC INSTRUMENT (see opposite page)

P	7		–					–			

Complete order code for Sealed Cage Pneumatic Modulevel

3.4.3 Standard Sealed Cage Displacer Models (continued)

PNEUMATIC INSTRUMENT Single Function Heads						
Direct Acting		**Reverse Acting**				
Std	Limit Sws	Std	Limit Sws	Function	Output	Mounting
PAA	**PIA**	**PEA**	**PMA**	Proportional	3–15 psig	Integral
PAB	**PIB**	**PEB**	**PMB**	Proportional	6–30 psig	Integral
PBA	**PJA**	**PFA**	**PNA**	Proportional w/reset	3–15 psig	Integral
PBB	**PJB**	**PFB**	**PNB**	Proportional w/reset	6–30 psig	Integral
PCA	**PKA**	**PGA**	**POA**	Transmitter	3–15 psig	Integral
PCB	**PKB**	**PGB**	**POB**	Transmitter	6–30 psig	Integral
PDA	**PLA**	**PHA**	**PPA**	Differential Gap	0–20 psig	Integral
PDB	**PLB**	**PHB**	**PPB**	Differential Gap	0–35 psig	Integral
TRANSMITTER/RECEIVER CONTROLLER **Dual Heads**						
Direct Acting		**Reverse Acting**				
Std	Limit Sws	Std	Limit Sws	Function	Output	Mounting
RAA	**—**	**REA**	**—**	Proportional	3–15 psig	Integral
RAB	**—**	**REB**	**—**	Proportional	6–30 psig	Integral
RBA	**—**	**RFA**	**—**	Proportional w/reset	3–15 psig	Integral
RBB	**—**	**RFB**	**—**	Proportional w/reset	6–30 psig	Integral
TAA	**—**	**TEA**	**—**	Proportional	3–15 psig	Remote
TAB	**—**	**TEB**	**—**	Proportional	6–30 psig	Remote
TBA	**—**	**TFA**	**—**	Proportional w/reset	3–15 psig	Remote
TBB	**—**	**TFB**	**—**	Proportional w/reset	6–30 psig	Remote

3.4.4 Standard Side Mount Displacer Models

DESIGN TYPE

P 6 8	Side mount in tank, carbon steel body, 316 SS float and trim

SPECIFIC GRAVITY AND PROCESS TEMPERATURE

+400 °F (+200 °C)	maximum temperature
2	0.60 minimum specific gravity

TANK CONNECTION

SIDE MOUNTING CONNECTION TYPE

ANSI Head Flange rating				
NPT ①	RF150lbs	RF300lbs	RF600 lbs ①	Size
F2A	—	—	—	3"
—	H3A	H4A	H5A	4"

① Maximum pressure rating is limited to 800 psig @ 100 °F due to float.

PNEUMATIC INSTRUMENT Single Function Heads for P68 model only				
Direct Acting	**Reverse Acting**			
Std	Std	Function	Output	Mounting
PAJ	**PEJ**	Proportional	3–15 psig	Integral
PAK	**PEK**	Proportional	6–30 psig	Integral
PBJ	**PFJ**	Proportional w/reset	3–15 psig	Integral
PBK	**PFK**	Proportional w/reset	6–30 psig	Integral
PCJ	**PGJ**	Transmitter	3–15 psig	Integral
PCK	**PGK**	Transmitter	6–30 psig	Integral
PDJ	**PHJ**	Differential Gap	0–20 psig	Integral
PDK	**PHK**	Differential Gap	0–35 psig	Integral

P	**6**	**8**	—	**2**				—		

Complete order code for Side Mount Pneumatic Modulevel

3.4.5 APM Pneumatic Control Models

DESIGN TYPE

A P M	Pneumatic Liquid Level Controls

MOUNTING AND MATERIALS OF CONSTRUCTION

Model Code	Output Signal	Mounting Arrangement	Body Material	Maximum Pressure	Maximum Temperature	Minimum S.G.	Displacer Size
1 3 1 L	3–15	Top	Carbon steel	230 psig (16 bar)	+250 °F (+120 °C)	0.90	2" x 14"
1 3 1 H	6–30	Top	Carbon steel	230 psig (16 bar)	+250 °F (+120 °C)	0.90	2" x 14"
W 2 5 1	3–15 6–30	External Flange Cage	Cast iron	250 lb. WSP	+406 °F (+208 °C)	0.86	2.5" x 9"
W 2 9 1	3–15 6–30	External Flange Cage	Carbon steel	300 lb. WSP	+422 °F (+217 °C)	0.85	2" x 12"

PNEUMATIC INSTRUMENT

Function	Pressure psig	Single Function Models			
		Direct Acting		Reverse Acting	
		Standard Head	w/Limit Switches	Standard Head	w/Limit Switches
Proportional	3–15	PAA	PIA	PEA	PMA
	6–30	PAB	PIB	PEB	PMB

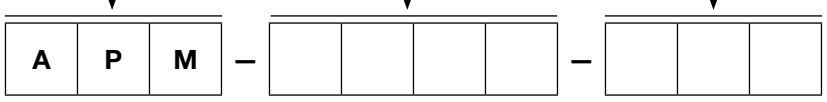

Service Policy

Owners of AMETEK LMS may request the return of a control or any part of a control for complete rebuilding or replacement. They will be rebuilt or replaced promptly. Controls returned under our service policy must be returned by Prepaid transportation. AMETEK LMS will repair or replace the control at no cost to the purchaser (or owner) other than transportation if:

1. Returned within the warranty period; and
2. The factory inspection finds the cause of the claim to be covered under the warranty.

If the trouble is the result of conditions beyond our control; or, is NOT covered by the warranty, there will be charges for labor and the parts required to rebuild or replace the equipment.

In some cases it may be expedient to ship replacement parts; or, in extreme cases a complete new control, to replace the original equipment before it is returned. If this is desired, notify the factory of both the model and serial numbers of the control to be replaced. In such cases, credit for the materials returned will be determined on the basis of the applicability of our warranty.

No claims for misapplication, labor, direct or consequential damage will be allowed.

Return Material Procedure

So that we may efficiently process any materials that are returned, it is essential that a “Return Material Authorization” (RMA) number be obtained from the factory, prior to the material’s return. This is available through an AMETEK LMS local representative or by contacting the factory. Please supply the following information:

1. Company Name
2. Description of Material
3. Serial Number
4. Reason for Return
5. Application

Any unit that was used in a process must be properly cleaned in accordance with OSHA standards, before it is returned to the factory.

A Material Safety Data Sheet (MSDS) must accompany material that was used in any media.

All shipments returned to the factory must be by prepaid transportation.

All replacements will be shipped F.O.B. factory.

MAGNETROL® / AMETEK®

705 Enterprise Street • Aurora, Illinois 60504-8149 USA
630.969.4000 • info.magnetrol@ametek.com • ametek-measurement.com

Copyright © 2026 AMETEK Magnetrol USA, LLC

BULLETIN: 48-620.23
EFFECTIVE: October 2019
SUPERSEDES: July 2016