SMART
SENSOR
BUSINESS

Leuze electronic

the sensor people





Figure can vary

Part no.: 68002219
MLC520R20-1950
Safety light curtain receiver

Contents

- Technical data
- Suitable transmitters
- Dimensioned drawings
- Electrical connection
- Circuit diagrams
- Operation and display
- Part number code
- Accessories
- Notes

Leuze electronic GmbH + Co. KG, In der Braike 1, D-73277 Owen
Phone: +49 7021 573-0, Fax +49 7021 573-199
info@leuze.com • www.leuze.com

Part no.: 68002219 – MLC520R20-1950 – Safety light curtain receiver

Technical data

Basic data	
Series	MLC 500
Device type	Receiver
Contains	2x BT-NC sliding block
Application	Hand protection

Functions	
Function package	Standard
Functions	Transmission channel changeover Start/restart interlock (RES) Contactor monitoring (EDM)

Characteristic parameters	
Type	4, IEC/EN 61496
SIL	3, IEC 61508
SILCL	3, IEC/EN 62061
Performance Level (PL)	e, EN ISO 13849-1
PFH_D	7.73E-09 per hour
Mission time T_M	20 years, EN ISO 13849-1
Category	4, EN ISO 13849

Protective field data	
Resolution	20 mm
Protective field height	1,950 mm

Optical data	
Synchronization	Optical between transmitter and receiver

Electrical data	
Protective circuit	Short circuit protected Overvoltage protection

Performance data	
Supply voltage	24 V, DC, -20 ... 20 %
Current consumption, max.	150 mA
Fuse	2 A semi time-lag
Inputs	
Number of digital switching inputs	3 Piece(s)

Switching inputs	
Type	Digital switching input
Switching voltage high, min.	18 V
Switching voltage low, max.	2.5 V
Switching voltage, typ.	22.5 V
Voltage type	DC

Part no.: 68002219 – MLC520R20-1950 – Safety light curtain receiver

Outputs	
Number of safety-related switching outputs (OSSDs)	2 Piece(s)
Safety-related switching outputs	
Type	Safety-related switching output OSSD
Switching voltage high, min.	18 V
Switching voltage low, max.	2.5 V
Switching voltage, typ.	22.5 V
Voltage type	DC
Current load, max.	380 mA
Load inductivity	2,000 µH
Load capacity	0.3 µF
Residual current, max.	0.2 mA
Residual current, typ.	0.002 mA
Voltage drop	1.5 V
Safety-related switching output 1	
Assignment	Connection 1, pin 5
Switching element	Transistor, PNP
Safety-related switching output 2	
Assignment	Connection 1, pin 6
Switching element	Transistor, PNP

Timing	
Response time	34 ms
Restart delay time	100 ms

Connection	
Number of connections	1 Piece(s)
Connection 1	
Type of connection	Connector
Function	Machine interface
Thread size	M12
Material	Metal
No. of pins	8 -pin
Cable properties	
Permissible conductor cross section, typ.	0.25 mm²
Length of connection cable, max.	100 m
Permissible cable resistance to load, max.	200 Ω

Mechanical data	
Dimension (W x H x L)	29 mm x 2,016 mm x 35.4 mm
Housing material	Metal, Aluminum
Lens cover material	Plastic / PMMA
Material of end caps	Diecast zinc
Net weight	2,100 g
Housing color	Yellow, RAL 1021
Type of fastening	Mounting on Device Column Groove mounting Mounting bracket Swivel mount

Operation and display

Type of display	LED 7-segment display
Number of LEDs	2 Piece(s)

Environmental data	
Ambient temperature, operation	-30 ... 55 °C
Ambient temperature, storage	-30 ... 70 °C
Relative humidity (non-condensing)	0 ... 95 %

Certifications	
Degree of protection	IP 65
Protection class	III
Certifications	TÜV Süd c CSA US c TÜV NRTL US S Mark
Vibration resistance	50 m/s²
Shock resistance	100 m/s²
US patents	US 6,418,546 B

Classification	
eCl@ss 8.0	27272704
eCl@ss 9.0	27272704
ETIM 5.0	EC002549

Suitable transmitters

	Part no.	Designation	Article	Description
	68000219	MLC500T20-1950	Safety light curtain transmitter	Resolution: 20 mm Protective field height: 1,950 mm Operating range: 0 ... 15 m Connection: Connector, M12, Metal, 5 -pin

Dimensioned drawings

All dimensions in millimeters

Calculation of the effective protective field height $H_{PFE} = H_{PFN} + B + C$

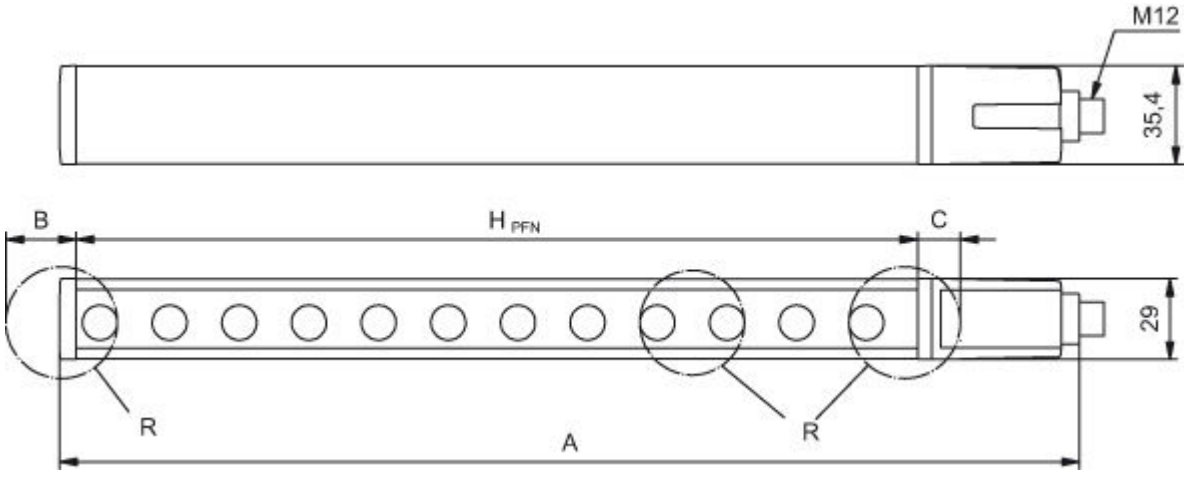

H_{PFE}	Effective protective field height = 1967 mm
H_{PFN}	Nominal protective field height = 1950 mm
A	Total height = 2016 mm
B	7 mm
C	10 mm
R	Effective protective field height H_{PFE} goes beyond the dimensions of the optics area to the outer borders of the circles labeled with R.

Electrical connection

Connection 1	
Type of connection	Connector
Function	Machine interface
Thread size	M12
Type	Male
Material	Metal
No. of pins	8 -pin
Encoding	A-coded
Connector housing	FE/SHIELD

Pin	Pin assignment	Conductor color
1	IO1	White
2	VIN1	Brown
3	IN3	Green
4	IN4	Yellow
5	OSSD1	Gray
6	OSSD2	Pink
7	VIN2	Blue
8	IN8	Red

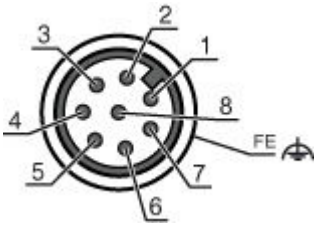

Circuit diagrams

Connection diagram receiver

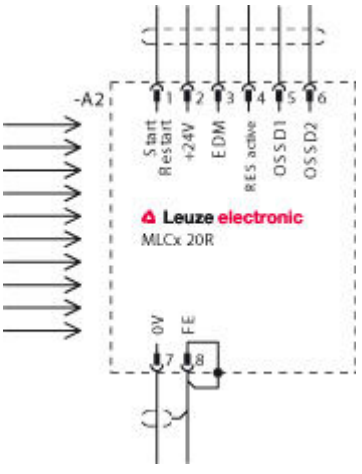

- VIN1 = +24 V, VIN2 = 0 V: transmission channel C1
- VIN1 = 0 V, VIN2 = +24 V: transmission channel C2

Circuit diagram example with downstream MSI-RM2 safety relay

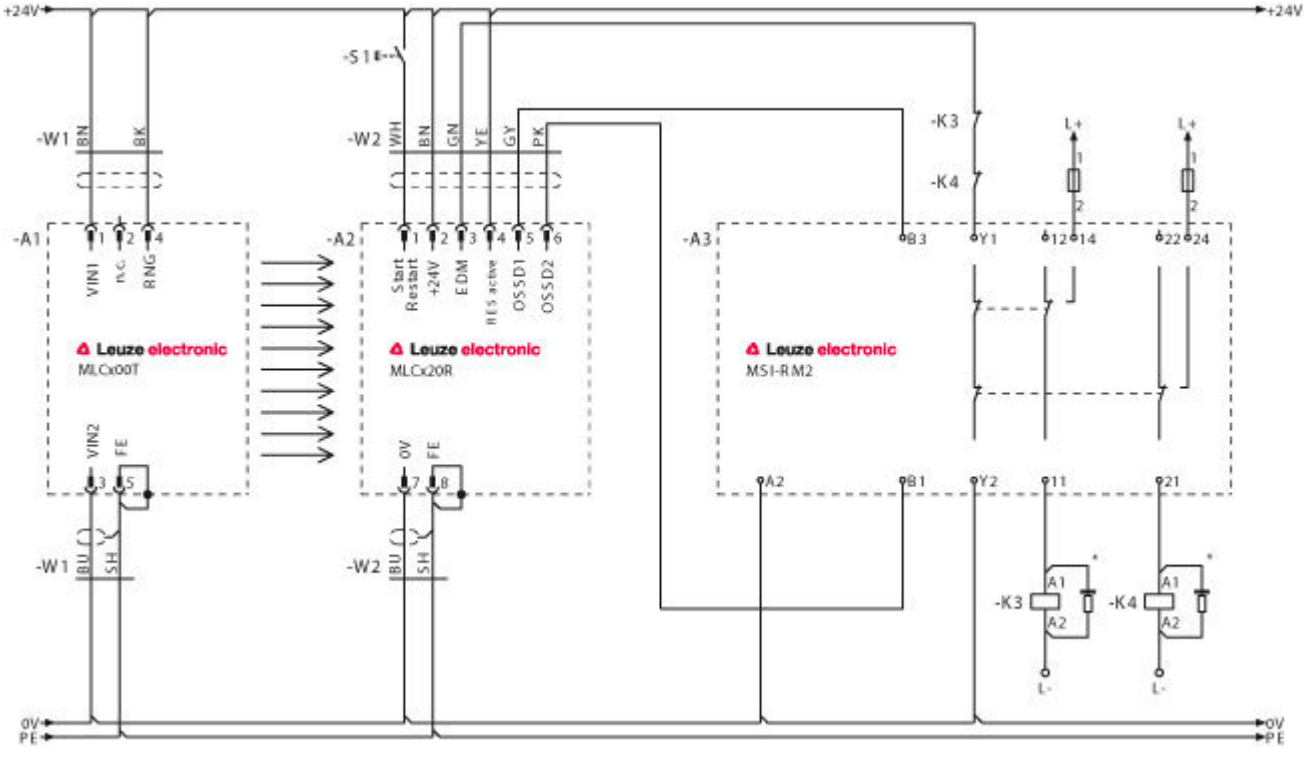

Operation and display

LEDs

LED	Display	Meaning
1	Off	Device switched off

LED	Display	Meaning
	Red, continuous light	OSSD off
	Red, flashing, 1 Hz	External error
	Red, flashing, 10 Hz	Internal error
	Green, flashing, 1 Hz	OSSD on, weak signal
	Green, continuous light	OSSD on
2	Off	RES deactivated or RES activated and enabled or RES blocked and protective field interrupted
	Yellow, continuous light	RES activated and blocked but ready to be unlocked - protective field free and linked sensor is enabled if applicable

Part number code

Part designation: **MLCxyy-za-hhhhei-ooo**

MLC	Safety light curtain
x	**Series:** 3: MLC 300 5: MLC 500
yy	**Function classes:** 00: Transmitter 01: transmitter (AIDA) 02: Transmitter with test input 10: Basic receiver - automatic restart 11: basic receiver - automatic restart (AIDA) 20: Standard receiver - EDM/RES selectable 30: Extended receiver - blanking/muting
z	**Device type:** T: transmitter R: receiver
a	**Resolution:** 14: 14 mm 20: 20 mm 30: 30 mm 40: 40 mm 90: 90 mm
hhhh	**Protective field height:** 150 … 3000: from 150 mm to 3000 mm
e	**Host/Guest (optional):** H: Host MG: Middle Guest G: Guest
i	**Interface (optional):** /A: AS-i
ooo	**Option:** /V: high Vibration-proof EX2: explosion protection (zones 2 + 22) SPG: Smart Process Gating

Note
A list with all available device types can be found on the Leuze electronic website at www.leuze.com.

Accessories

Connection technology - Connection cables

	Part no.	Designation	Article	Description
	429288	CB-M12-25000-8GF	Connection cable	Connection 1: Connector, M12, Axial, Female, A-coded, 8 -pin Connection 2: Open end Shielded: No Cable length: 25,000 mm Sheathing material: PUR
	429289	CB-M12-50000-8GF	Connection cable	Connection 1: Connector, M12, Axial, Female, A-coded, 8 -pin Connection 2: Open end Shielded: No Cable length: 50,000 mm Sheathing material: PUR
	50135128	KD S-M12-8A-P1-050	Connection cable	Connection 1: Connector, M12, Axial, Female, A-coded, 8 -pin Connection 2: Open end Shielded: Yes Cable length: 5,000 mm Sheathing material: PUR
	50135129	KD S-M12-8A-P1-100	Connection cable	Connection 1: Connector, M12, Axial, Female, A-coded, 8 -pin Connection 2: Open end Shielded: Yes Cable length: 10,000 mm Sheathing material: PUR
	50135130	KD S-M12-8A-P1-150	Connection cable	Connection 1: Connector, M12, Axial, Female, A-coded, 8 -pin Connection 2: Open end Shielded: Yes Cable length: 15,000 mm Sheathing material: PUR
	50135131	KD S-M12-8A-P1-250	Connection cable	Connection 1: Connector, M12, Axial, Female, A-coded, 8 -pin Connection 2: Open end Shielded: Yes Cable length: 25,000 mm Sheathing material: PUR
	50135132	KD S-M12-8A-P1-500	Connection cable	Connection 1: Connector, M12, Axial, Female, A-coded, 8 -pin Connection 2: Open end Shielded: Yes Cable length: 50,000 mm Sheathing material: PUR
	50135122	KD U-M12-8A-P1-050	Connection cable	Connection 1: Connector, M12, Axial, Female, A-coded, 8 -pin Connection 2: Open end Shielded: No Cable length: 5,000 mm Sheathing material: PUR
	50135123	KD U-M12-8A-P1-100	Connection cable	Connection 1: Connector, M12, Axial, Female, A-coded, 8 -pin Connection 2: Open end Shielded: No Cable length: 10,000 mm Sheathing material: PUR

Part no.: 68002219 – MLC520R20-1950 – Safety light curtain receiver

	Part no.	Designation	Article	Description
	50135124	KD U-M12-8A-P1-150	Connection cable	Connection 1: Connector, M12, Axial, Female, A-coded, 8 -pin Connection 2: Open end Shielded: No Cable length: 15,000 mm Sheathing material: PUR

Connection technology - Connectors

	Part no.	Designation	Article	Description
	429178	CB-M12-8GF	Connector	Connection: Connector, M12, Axial, Female, A-coded, 8 -pin

Mounting technology - Mounting brackets

	Part no.	Designation	Article	Description
	429056	BT-2L	Mounting bracket set	Design of mounting device: Angle, L-shape Mounting bracket, at system: Through-hole mounting Mounting bracket, at device: Screw type Material: Metal
	429057	BT-2Z	Mounting bracket set	Design of mounting device: Angle, Z-shape Mounting bracket, at system: Through-hole mounting Mounting bracket, at device: Screw type Material: Metal

Mounting technology - Swivel mounts

	Part no.	Designation	Article	Description
	429393	BT-2HF	Mounting bracket set	Contains: 2x BT-HF swivel mount, 1 cylinder for mounting on the light curtain Mounting bracket, at system: Through-hole mounting Mounting bracket, at device: Clampable Type of mounting device: Turning, 360° Material: Metal, Plastic
	429394	BT-2HF-S	Mounting bracket set	Contains: 2x BT-HF swivel mount, 1 cylinder for mounting on the light curtain Mounting bracket, at system: Through-hole mounting Mounting bracket, at device: Clampable Type of mounting device: Turning, 360° Material: Metal, Plastic Shock absorber: Yes

Mounting technology - Other

	Part no.	Designation	Article	Description
	425740	BT-10NC60	Sliding block set	Contains: 10x BT-NC sliding block Bore hole 1: Ø 4.7 mm Bore hole 2: M6 Design of mounting device: Sliding block Mounting bracket, at system: Mounting thread Mounting bracket, at device: Groove mounting Material: Metal

Part no.: 68002219 – MLC520R20-1950 – Safety light curtain receiver

	Part no.	Designation	Article	Description
	425741	BT-10NC64	Sliding block set	Contains: 10x BT-NC-M4-M6 sliding block Bore hole 1: M4 Bore hole 2: M6 Design of mounting device: Sliding block Mounting bracket, at system: Mounting thread Mounting bracket, at device: Groove mounting Material: Metal
	425742	BT-10NC65	Sliding block set	Contains: 10x BT-NC-M5-M6 sliding block Bore hole 1: M5 Bore hole 2: M6 Design of mounting device: Sliding block Mounting bracket, at system: Mounting thread Mounting bracket, at device: Groove mounting Material: Metal
	424417	BT-2P40	Mounting bracket set	Contains: 2x BT-P40 clamp bracket Design of mounting device: Mounting clamp Mounting bracket, at system: Groove mounting Mounting bracket, at device: Groove mounting Type of mounting device: Clampable Material: Metal
	424422	BT-2SB10	Mounting bracket set	Contains: 2x BT-SB10 Design of mounting device: Mounting clamp Mounting bracket, at system: Through-hole mounting Mounting bracket, at device: Clampable, an der seitlichen C-Nut Type of mounting device: Swiveling Swivel range: -8 ... 8 ° Material: Metal
	424423	BT-2SB10-S	Mounting bracket set	Contains: 2x BT-SB10-S Design of mounting device: Mounting clamp Mounting bracket, at system: Through-hole mounting Mounting bracket, at device: Clampable, an der seitlichen C-Nut Swivel range: -8 ... 8 ° Material: Metal Shock absorber: Yes

Display/operating elements

	Part no.	Designation	Article	Description
	426296	AC-ABF70	Acknowledgment unit	Switching current via button: 1 ... 1,000 mA Housing material: Glass fiber reinforced (PPS), self-extinguishing Clamping plate material: Stainless steel Degree of protection: IP 67, IP 69K Functions: Reset of the start/restart interlock, Overriding with AOPDs with muting function, Illuminated reset buttons Reset buttons: Yes LED indicators: Yes

Test rods

	Part no.	Designation	Article	Description
	349939	AC-TR20/40	Test piece	Diameter 1: 20 mm Diameter 2: 40 mm Housing material: Plastic, Terluran HH106 black

Part no.: 68002219 – MLC520R20-1950 – Safety light curtain receiver

Alignment aids

	Part no.	Designation	Article	Description
	427300	AC-ALM	Alignment aid	Housing material: Plastic
	520101	AC-ALM-M	Alignment aid	Housing material: Plastic
	560020	LA-78U	Alignment aid	Light source: laser, Red Housing material: Metal
	520004	LA-78UDC	Alignment aid	Light source: laser, Red Housing material: Metal

Device columns

	Part no.	Designation	Article	Description
	549867	UDC-2100-S2	Device column	Dimensions: 160 mm x 2,160 mm x 149 mm Column height without foot: 2,100 mm Functions: Adjustable, 3 directions, Mounting and protection of light curtains and multiple light beam devices
	549857	UDC-2500-S2	Device column	Dimensions: 160 mm x 2,560 mm x 149 mm Column height without foot: 2,500 mm Functions: Adjustable, 3 directions, Mounting and protection of light curtains and multiple light beam devices
	549865	UDC-3100-S2	Device column	Dimensions: 160 mm x 3,160 mm x 149 mm Column height without foot: 3,100 mm Functions: Mounting and protection of light curtains and multiple light beam devices, Adjustable, 3 directions

Notes

Observe intended use!
• The product may only be put into operation by competent persons. • Only use the product in accordance with its intended use.