VA9104 Series Electric Non-Spring Return Valve Actuators

Product Bulletin

LIT-12011050
Issued October 2025

The VA9104 Series Actuators are direct-mount, non-spring return electric valve actuators that operate on AC 24 V or 100 to 240 VAC power. Use these synchronous motors or stepper motors (for line voltage models) driven actuators to provide accurate positioning on Johnson Controls® VG1000 Series DN15, DN20, and DN25 (1/2, 3/4, and 1 in.) ball valves in HVAC applications.

The VA9104 Series Electric Non-Spring Return Actuators provide a running torque of 35 lb·in (4 N·m). The nominal travel time is 60 seconds at 60 Hz for 90° of rotation.

Figure 1: VA9104 Series Electric Non-Spring Return Actuator on VG1000 Series Ball Valve

Table 1: Features and Benefits

Features	Benefits
35 dBA Maximum Audible Noise Rating at 1 Meter	Meets the audible noise requirements for open ceiling environments: whisper quiet operation will not disturb building occupants.
Synchronous Drive (-AGA, -IGA, -GGA models)	Provides a constant rotation time that is independent of the load.
100,000 Cycle Rating	Provides years of trouble-free service.
Direct Mounting with Single Screw	Reduces installation time and cost.
Manual Override	Allows for manual positioning of the valve, independent of a power supply.
Plenum Cable or Screw Terminal Electrical Connections	Make wiring quick and easy while allowing for ceiling plenum applications.
3/8 in. Flexible Metal Conduit Connector on VA9104-xxA-2S Models	Simplifies installation and field wiring.
Available Weather Shield for Field Mounting	Follows NEMA 4X, IP66 specifications.
Optional M9000-561 Thermal Barrier	Extends the fluid temperature range to 284°F (140°C) or 15 psig saturated steam.
5-Year Warranty	Protects the consumer investment.

IMPORTANT: Use this VA9104 Series Electric Non-Spring Return Actuator only to control equipment under normal operating conditions. Where failure or malfunction of the electric actuator could lead to personal injury or property damage to the controlled equipment or other property, additional precautions must be designed into the control system. Incorporate and maintain other devices, such as supervisory or alarm systems or safety or limit controls, intended to warn of or protect against failure or malfunction of the electric actuator.

IMPORTANT: Do not install or use this VA9104 Series Electric Non-Spring Return Actuator in or near environments where corrosive substances or vapors could be present. Exposure of the electric actuator to corrosive environments may damage the internal components of the device, and will void the warranty.

Operation

When combined with a controller, the VA9104 Series Electric Non-Spring Return Actuator provides reliable, integrated ball valve control. An AC 24 V (AGA or IGA models), AC 100 to 240 V (IUA models), or AC 24 V power and a DC 0(2) to 10 V or 0(4) to 20 mA controller (GGA models) input signal from the controller to electric actuator causes the motor to rotate in the proper direction and moves the ball open or closed. When the controller stops sending the input signal, the electric actuator remains in place.

Note: To avoid excessive wear or drive time on the motor for the AGA models, use a controller and/or software that provides a timeout function at the end of rotation (stall).

Repair Information

If the VA9104 Series Electric Non-Spring Return Valve Actuator fails to operate within its specifications, replace the unit. For a replacement electric actuator, contact the nearest Johnson Controls representative.

Wiring Diagrams

VA9104-AGA-2S and VA9104-IGA-2S

The VA9104-AGA-2S and VA9104-IGA-2S Series Electric Non-Spring Return Valve Actuators require an AC 24 V input signal and work with a variety of controllers. These electric actuators include an integrated 48 in. (1.2 m) long cable; see Figure 2 for proper wiring.

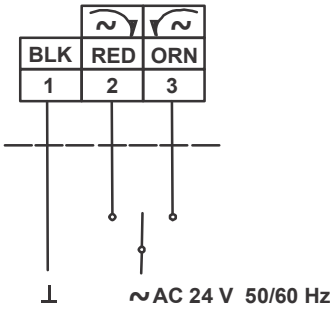

Figure 2: VA9104-AGA-2S and VA9104-IGA-2S Control Wiring Diagram

Note: Use a controller or software that provides a timeout function at the end of rotation (stall) to avoid excessive wear or drive time on the actuator motor with all VA9104-AGA Series Actuators. The -GGA and -IGA models have an auto shutoff feature to prevent excessive wear or drive time on the motor.

VA9104-AGA-3S and VA9104-IGA-3S

The VA9104-AGA-3S and VA9104-IGA-3S Series Electric Non-Spring Return Valve Actuators require an AC 24 V input signal and work with a variety of controllers. These electric actuators include M3 screw terminals that require a slotted screwdriver; see Figure 3 and Figure 4 for proper wiring.

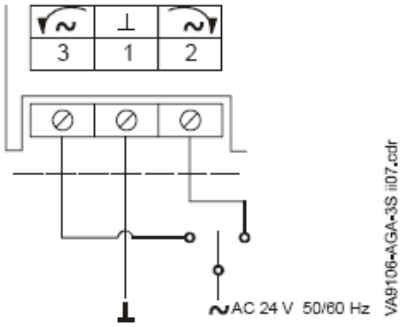

Figure 3: VA9104-AGA-3S Control Wiring Diagram

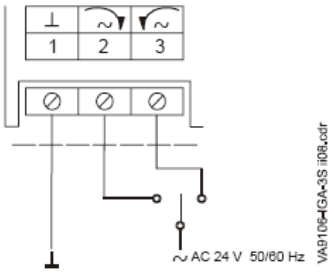

Figure 4: VA9104-IGA-3S Control Wiring Diagram

VA9104-IUA-2S

The VA9104-IUA-2S Series Electric Non-Spring Return Valve Actuators require an 85 to 265 V AC input signal and work with a variety of controllers. These actuators include an integrated 48 in. (1.2 m) long cable; see Figure 5 and Figure 6 for proper wiring.

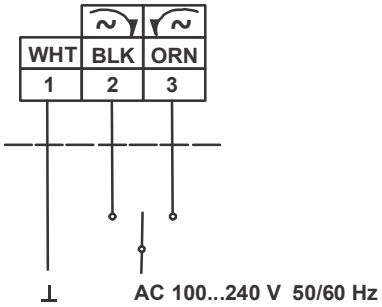

Figure 5: VA9104-IUA-2S Control Wiring Diagram

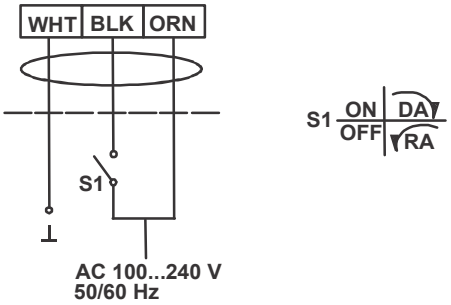

Figure 6: VA9104-IUA-2S On/Off Control Wiring Diagram

VA9104-GGA-2S

The VA9104-GGA-2S Series Electric Non-Spring Return Valve Actuators require AC 24 V power and a DC 0(2) to 10 V or 0(4) to 20 mA controller input signal. These electric actuators include an integrated 48 in. (1.2 m) long cable; see Figure 7 for proper wiring.

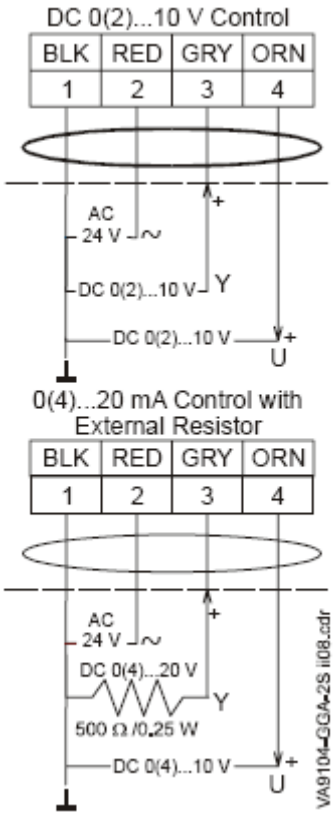

Figure 7: VA9104-GGA-2S Control Wiring Diagram

VA9104-GGA-3S

The VA9104-GGA-3S Series Electric Non-Spring Return Valve Actuators require AC 24 V power and a DC 0(2) to 10 V or 0(4) to 20 mA controller input signal. These electric actuators include M3 screw terminals that require a slotted screwdriver. See Figure 8 for proper wiring.

VA9104-GGA actuators are factory set for Direct Acting (DA) mode and for a DC 0 to 10 V input control signal. In DA mode, a minimum control signal drives the actuator to the full counterclockwise (CCW) position, and a maximum control signal drives the actuator to the full clockwise (CW) position.

For Reverse Acting (RA) operation, a minimum control signal drives the actuator to the full CW position and a maximum signal drives the actuator to the full CCW position. To change the factory settings, remove the actuator cover and adjust the switches on the circuit board.

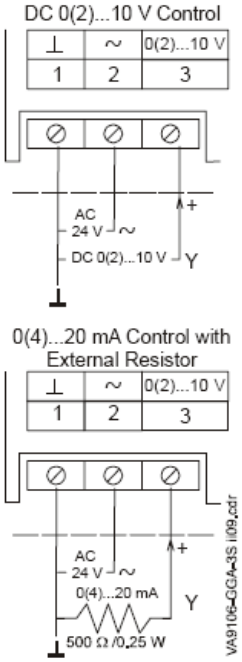

Figure 8: VA9104-GGA-3S Control Wiring Diagram

The VA9104-GGA features 24 VAC override on the signal input allowing for application logic based fail position. Various wiring diagrams are provided to suit your application (Figure 9).

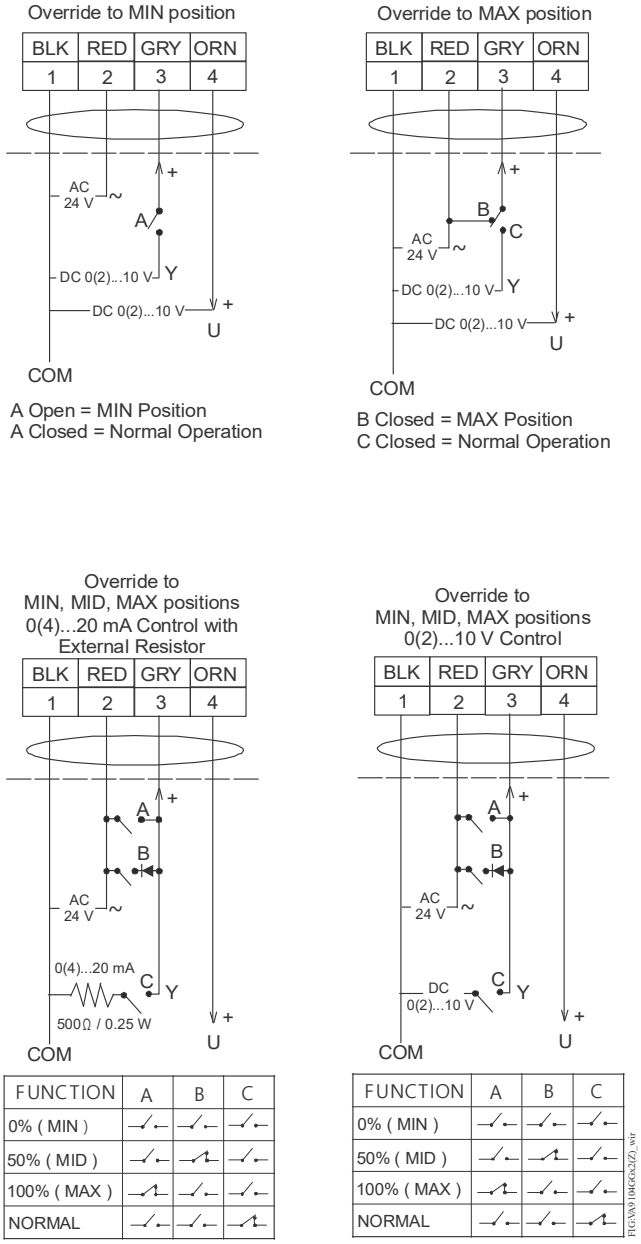

Figure 9: VA9104-GGA Control Wiring Diagram (Overrides)

Ordering Information

Table 2: Selection Chart

Code Number	Rotation Time For 90°	Power Requirement		Power Consumption		Input Signal			Position Feedback	Electrical Connection		
	Power On – Running (Seconds)	24 VAC + 25%/-20% at 50/60 Hz	85 to 265 V at 50/60 Hz	Amperage: Running	VA Rating, Transformer Sizing	Floating Point Without Timeout	On/Off and Floating Point With Timeout	0 (2) to 10 VDC 0 (4) to 20 mA (with 500 ohm Resistor)	0(2) to 10 VDC	48 in. (1.2 m) UL 444 Type CMP Plenum Rated Cable With 19 AWG (0.75 mm^2) Conductors and 0.25 in. (6 mm) Ferrule Ends and Connector for 3/8 in. (9.5 mm) Flexible Metal Conduit	48 in. (1.2 m) with 18 AWG (1.02 mm) conductors and connector for 3/8 in. (9.5 mm) flexible metal conduit	M3 Screw Terminals (Require a Slotted Screwdriver)
VA9104-AGA-2S	60 s at 60 Hz 72 s at 50 Hz	X			2.3	X				X		
VA9104-AGA-3S	60 s at 60 Hz 72 s at 50 Hz	X			2.3	X						X
VA9104-GGA-2S	60 s at 60 Hz 72 s at 50 Hz	X			2.9			X	X	X		
VA9104-GGA-3S	60 s at 60 Hz 72 s at 50 Hz	X			2.9			X				X
VA9104-IGA-2S	60 s at 60 Hz 72 s at 50 Hz	X			3.0		X			X		
VA9104-IGA-3S	60 s at 60 Hz 72 s at 50 Hz	X			3.0		X					X
VA9104-IUA-2S	60 s at 60 Hz 60 s at 50 Hz		X	0.07 A	7.5		X				X	

Table 3: Accessories (Order Separately)

Code Number	Description
M9000-342	Weather Shield Kit for VG1000 Series Ball application of VA9104, VA9203, VA9208, and VA9308/9310 Series Electric Actuators (quantity 1)
M9000-551	Mounting Hardware Replacement Kit (quantity 1)
M9000-561	Thermal Barrier Kit. Extends the VA9104, VA9203, VA9208, and VA9308/9310 Series Electric Actuators applications to include low pressure steam (quantity 1).
M9000-700	Universal Ball Valve Linkage Kit (quantity 1)

See Figure 10 for dimensions of the Non-Spring Return VA9104 Actuated VG1245 and VG1845 Series Ball Valve with M9000-551 Linkage. See Table 4 for specific model linkage dimensions.

See Table 5 for specific model dimensions for the VA9104 Actuated VG1275 and VG1875 Series Sweat End and the VA9104 Actuated VG1295 and VG1895 Series Press End Connection Ball Valves.

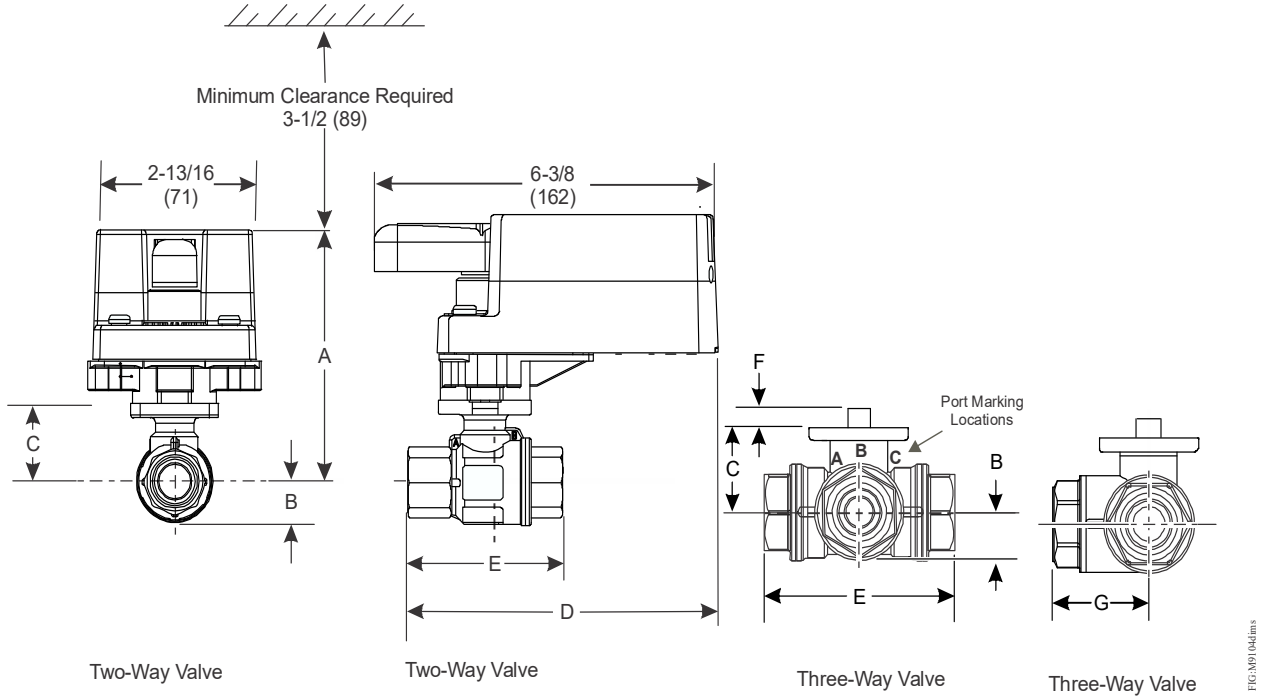

Figure 10: Non-Spring Return VA9104 Actuated VG1245 and VG1845 Series Ball Valve with M9000-551 Linkage Dimensions, in. (mm)

Table 4: VA9104 or M9104 Actuated VG1245 and VG1845 Series Ball Valve with M9000-551 Linkage Dimensions, in. (mm)

Valve Size, in. (DN)[1]	A	B	C	D	E	F	G
1/2 (DN15)	3-7/8 (98)	21/32 (17)	1-7/32 (31)	5-7/64 (129)	2-33/64 (64)	11/32 (9)	1-1/4 (32)
3/4 (DN20)	3-7/8 (98)	21/32 (17)	1-7/32 (31)	5-7/32 (133)	2-51/64 (71)	11/32 (9)	1-13/32 (36)
1 (DN25)	3-11/16 (100)	3/4 (19)	1-19/64 (33)	5-9/16 (141)	3-13/32 (87)	11/32 (9)	1-11/16 (43)

1. On models with the flow-characterizing disk, the disk is located in Port A. Port A must be the inlet.

Table 5: VA9104 Actuated VG1275 and VG1875 Series Ball Valve with Sweat End Connections and VA9104 Actuated VG1295 and VG1895 Series Ball Valves with Press End Connections Dimensions, in. (mm)

Valve Size, in. (DN)[1]	A	B	C	D	E	F
1/2 (DN15)	3-7/8 (98)	21/32 (17)	1-7/32 (31)	5-45/64 (145)	3-25/32 (96)	2-13/16 (55)
3/4 (DN20)	3-7/8 (98)	21/32 (17)	1-7/32 (31)	5-57/64(150)	4-3/32 (104)	2-15/32 (62)
1 (DN25)	3-11/16 (100)	3/4 (19)	1-19/64 (33)	5-1/8 (156)	3-13/32 (118)	2-27/32 (72)

1. On models with the flow-characterizing disk, the disk is located in Port A. Port A must be the inlet.

See Figure 11 and Table 6 for VA9104 Valve Actuator dimensions with optional M9000-561 Thermal Barrier installed.

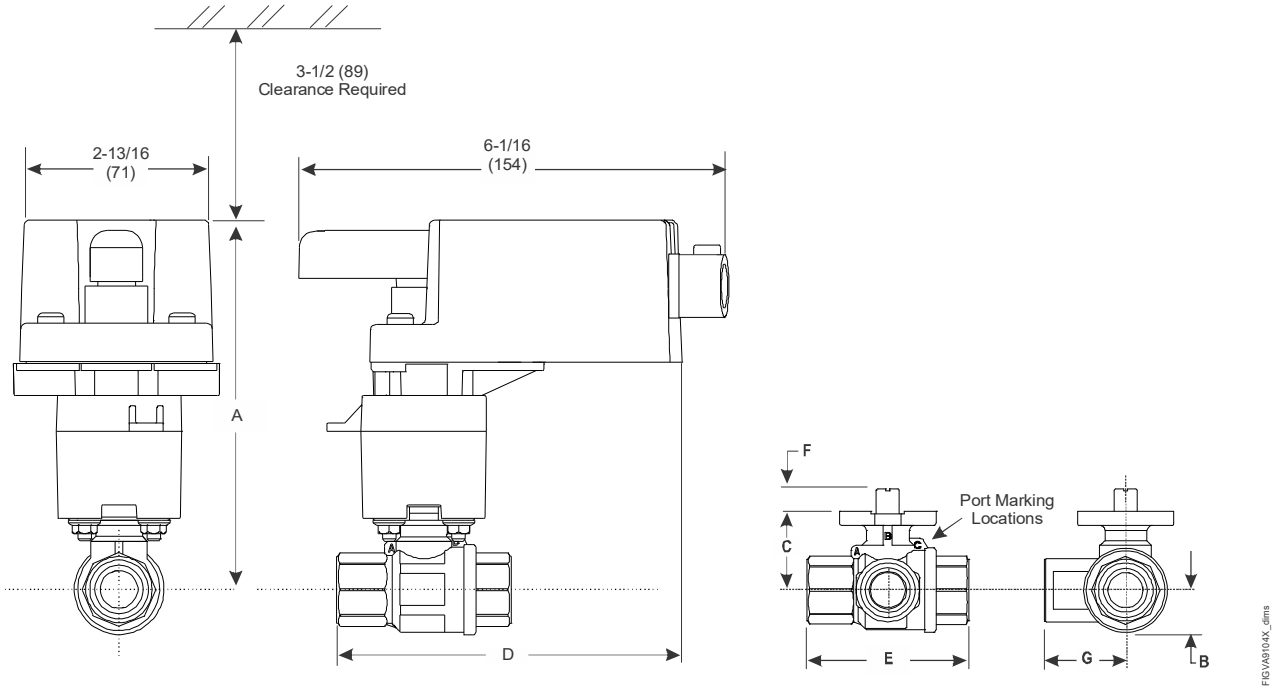

Figure 11: Field-Installed VA9104 Series Electric Actuator Dimensions with Optional M9000-561 Thermal Barrier Dimensions, in. (mm)

Table 6: VA9104 Actuated VG1245 and VG1845 Series NPT Ball Valves with Optional Thermal Barrier Installed Dimensions, in. (mm)

Valve Size, in. (DN)[1]	A	B	C	D	E	F	G
1/2 (DN15)	5-11/32 (135)	21/32 (17)	1-7/32 (31)	5-7/64 (129)	2-33/64 (64)	11/32 (9)	1-1/4 (32)
3/4 (DN20)	5-11/32 (135)	21/32 (17)	1-7/32 (31)	5-7/32 (133)	2-51/64 (71)	11/32 (9)	1-13/32 (36)
1 (DN25)	5-27/64 (137)	3/4 (19)	1-19/64 (33)	5-9/16 (141)	3-13/32 (87)	11/32 (9)	1-11/16 (43)

1. On models with the flow-characterizing disk, the disk is located in Port A. Port A must be the inlet.

Technical Specifications

VA9104 Series Electric Non-Spring Return Valve Actuators (Part 1 of 2)

Power Requirements	**VA9104-xxx-xS**	AC 24 V +25%/-20% at 50/60 Hz, 2.3 VA (-AGA), 2.9 VA (-GGA), 3.0 VA (-IGA) Supply, Class 2 or Safety Extra-Low Voltage (SELV)
	VA9104-IUA-xS	AC 100 to 240 V (-15%/+10%) at 50/60 Hz, 0.07 A Running, and 7.5 VA Supply
Control Type	**VA9104-AGA-xS**	Floating Control without Timeout
	VA9104-GGA-xS	Proportional Control
	VA9104-IxA-xS	Floating or On/Off Control with Timeout
Control Signal	**VA9104-AGA-xS**	AC 24 V +25%/-20% at 50/60 Hz, Class 2 or SELV Without Timeout
	VA9104-GGA-xS	DC 0 (2) to 10 V or 0 (4) to 20 mA With Field-Furnished 500 ohm Resistor
	VA9104-IGA-xS	AC 24 V +25%/-20% at 50/60 Hz, Class 2 or SELV With Timeout
	VA9104-IUA-xS	AC 100 to 240V -15%/+10% at 50/60 Hz, and 7.5 VA Supply
Control Input Impedance	**VA9104-GGA-xS**	Voltage Input: 200,000 ohm Current Input: 500 ohm With Field-Furnished 500 ohm Resistor
Running Torque		35 lb·in (4 N·m)
Travel Time	**VA9104-xGA-xS**	60 Seconds at 60 Hz (72 Seconds at 50 Hz) for 90° of Rotation
	VA9104-IUA-2S	60 Seconds for 90° of Rotation
Rotation Range		93° ±3°, CW or CCW
Cycles		100,000 Full Stroke Cycles; 2,500,000 Repositions at Rated Running Torque
Audible Noise Rating		35 dBA at 39-13/32 in. (1 m) maximum
Electrical Connections	**VA9104-xxA-2S**	48 in. (1.2 m) UL 444 Type CMP Plenum Rated cable with 18 AWG (1.02 mm^2) connector for 3/8 in. (9.5 mm) flexible metal conduit.
	VA9104-xGA-3S	M3 Screw Terminals (Requires a Slotted Screwdriver)
	VA9104-IUA-2S	48 in. (1.2 m) with 18 AWG (1.02 mm) conductors and connector for 3/8 in. (9.5 mm) flexible metal conduit.
Enclosure	**VA9104-xxA-2S**	NEMA 2, IP42
	VA9104-xGA-3S	NEMA 1, IP40
Ambient Conditions	**Operating**	-4 to 140°F (-20 to 60°C); 90% RH Maximum, Noncondensing
	Storage	-40 to 185°F (-40 to 85°C); 90% RH Maximum, Noncondensing
Fluid Temperature Limits (Actuator and Valve Assembly)	**VG12x5 and VG18x5 Series**	-22 to 212°F (-30 to 100°C)
	VG12x5 and VG18x5 Series With M9000-561 Thermal Barrier Installed	-22 to 284°F (-30 to 140°C) water; 15 psig (103 kPa) at 250°F (121°C) Saturated Steam

VA9104 Series Electric Non-Spring Return Valve Actuators (Part 2 of 2)

Compliance	**United States**	UL Listed, CCN XAPX, File 27734 Plenum rated, UL2043, suitable for use in other environmental spaces (plenums) in accordance with section 300.22.(c) of the National Electrical Code
	Canada	cUL Listed, CCN XAPX7, File 27734 Plenum Rated Per CSA 22.2 No. 236/UL 1995, Heating and Cooling Equipment
	Europe	Johnson Controls declares that this product is in compliance with the essential requirements and other relevant provisions of the EMC Directive 2004/108/EC and the Low Voltage Directive 2006/95/EC.
	Australia and New Zealand	RCM Mark, Australia/NZ Emissions Compliant
Shipping Weight		1.25 lb (0.55 kg)

The performance specifications are nominal and conform to acceptable industry standards. For application at conditions beyond these specifications, consult the local Johnson Controls office. Johnson Controls shall not be liable for damages resulting from misapplication or misuse of its products.

Building Technologies & Solutions
507 E. Michigan Street, Milwaukee, WI 53202

Johnson Controls® is a registered trademark of Johnson Controls.
All other marks herein are the marks of their respective owners. © 2025 Johnson Controls.

Published in U.S.A. www.johnsoncontrols.com