MiniPID 2 PPB

OEM Gas Sensor with State-of-the-Art Sensing Technology



MiniPID 2 PPB is optimised to deliver an exceptionally low background which allows for optimum low-end sensitivity whilst maintaining a wide dynamic range.

Key Features

- Wide dynamic range
- 10,000 hours lamp life
- Anti-contamination design
- Humidity resistant
- Lamp out diagnostic
- Serviceable electrode stack and lamp
- Intrinsically safe
- Series 4/A package

Typical Applications

- Industrial health and safety
- Confined space entry
- HVAC
- Air quality monitoring
- Arson investigation
- Indoor air quality monitoring
- Leak detection
- Soil contamination and remediation

Performance	
Electrode stack colour	White
Minimum detection limit	1 ppb
Range	>40 ppm
T90 response time	<8 seconds
Sensitivity	>30 mV/ppm

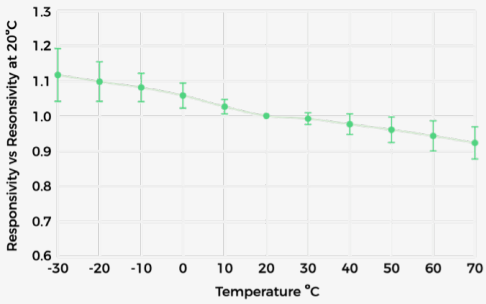

Power & Signal	
Supply voltage (using internal regulator)	3.6—18 V (non intrinsically safe 10—18 V)
Supply voltage (using a regulated power supply)	3—3.6 V
Current	20—32 mA (130 for 100 ms at start up)
Power consumption	100 mW at 3.3 V
Output signal (using a regulated power supply)	0 — rail voltage — 0.1 V

Environmental	
Temperature range	-40—65 °C
Relative humidity range	0—99% RH (non condensing)

Lifetime & Warranty	
Sensor life	>5 years
Lamp life	10,000 hours
Warranty	10.6 eV lamp and MiniPID 2 body = 12 months

Order Code	Intrinsically Safe	Supply Voltage
MP3SBLBAU2	✓	3.0—3.2 V
MP3SBLBBU2	✓	3.2—3.6 V
MP3SBLBCU2	✓	3.6—10.0 V
MP3SBLBNU2	✗	3.6—18 V

Approvals	
Patents	US 7.046.012 EC 1474681
Europe	ATEX II 1G Ex ia IIC Ga (-40 °C ≤ Ta ≤ +55 °C) @ 1.1 W
Worldwide	IECEx II 1G Ex ia IIC Ga (-40 °C ≤ Ta ≤ +55 °C) @ 1.1 W
North America	UL913 (8th) Edition Class I, II, III, Division 1 CSA-C22.2 No157-92
Eurasian Customs Union	№ EAЭC RU C-GB.HA65.B.00635/20

Drawings

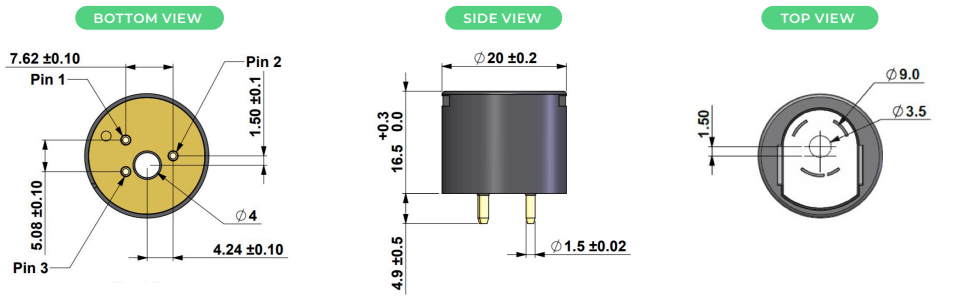

ION CONNECT Kit

ION CONNECT supports both UART and I2C communication protocols, allowing flexible integration into a wide range of applications. Associated ION PC software allows you to easily calibrate, set alarm thresholds, set response factors and more.

Optimised for both diffused and impressed flow sampling methods. ION CONNECT Kit is compatible with a dedicated ION GAS HOOD accessory, designed to deliver precise impressed flow to MiniPID 2 and ION SENSE® PID sensors.

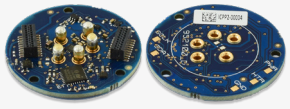

ION TRANSMIT Kit

ION TRANSMIT Kit enables long-range communication via RS-485 using Modbus RTU and 4—20 mA allowing connectivity to a wide range of applications. Designed to pair seamlessly with ION CONNECT, this 32 mm PCB transmits all available sensor data over robust, industry-standard protocols.

With its compact form factor and versatile output options, ION TRANSMIT brings enhanced flexibility to your gas sensing setup, making it easy to integrate ION SENSE® sensors even into the most demanding monitoring systems.

