SmartLine

Honeywell

Technical Information

STR700 SmartLine Remote Diaphragm Seals Specification 34-ST-03-124, December 2025



Introduction

Part of the SmartLine® family of products, the STR700 is a series of pressure transmitters hydraulically matched and optimized with a complete set of remote diaphragm seals. Utilizing the same high performance sensor technology of the ST 800 product line Honeywell has optimized the mechanical and hydraulic designs to minimize the typical effects of temperature on remote seal systems.
The SmartLine family is also fully tested and compliant with Experion® PKS providing the highest level of compatibility assurance and integration capabilities. SmartLine easily meets the most demanding application needs for pressure measurement applications.

- Accuracies up to 0.075% of span.
- Stability up to 0.02% of URL per year for 10 years (base transmitter only).
- Automatic static pressure & temperature compensation.
- Rangeability up to 100:1.
- Easy to use and intuitive display capabilities.
- Intuitive External zero, span, & configuration capability.
- Comprehensive on-board diagnostic capabilities.
- Integral Dual Seal design for highest safety based on ANSI/NFPA 70-202 and ANSI/ISA 12.27.0.
- World class overpressure protection.
- Full compliance to SIL 2/3 requirements.
- Modular design characteristics.
- Supports NAMUR NE-107 Extended Diagnostics



Figure 1 – STR700 Remote Diaphragm Seal Unit with feature field-proven piezoresistive sensor technology

Typical Diaphragm Seal applications

- High Process Temperatures
- Viscous or Suspended Solids
- Highly Corrosive Process Materials
- Sanitary Applications
- Applications with Hydrogen Permeation Possibilities
- Level Applications with Maintenance Intensive Wet Legs
- Applications requiring remote Transmitter Mounting
- Tank Applications with Density or Interface Measurements

Communications/Output Options:

- HART ® (version 7.0)

Span & Range Limits:

Model	URL psid (bar)	LRL psid (bar)	Min Span psid (bar)
STR735D	100 (7.0)	-100 (-7.0)	0.9 (0.062)
Model	**psig (bar)**	**psig (bar)**	**psig (bar)**
STR745G	500 (35.0)	-14.7 (-1.0)	5 (0.35)

Description

The SmartLine family pressure transmitters are designed around a high performance piezo-resistive sensor. This one sensor actually integrates multiple sensors linking process pressure measurement with on-board static pressure (DP Models) and temperature compensation measurements.

Unique Indication/Display Option

Standard LCD Display Features

- Modular (may be added or removed in the field).
- Supports HART protocol variant.
- 0, 90,180, and 270 degree position adjustments.
- Four configurable screens.
- Standard and custom measurement units available.
- Display calculated flow (square root) value in addition to analog output signal.
- 2 Lines 6 digits PV (9.95H x 4.20W mm) 8 Characters.
- Write protect Indication.
- Built-in Basic Device Configuration through Internal or External Buttons – Range/Engineering Unit/Loop Test /Loop Calibration/Zero /Span Setting.
- Multiple language capabilities (EN, RU, and UK).

Diagnostics

SmartLine transmitters all offer digitally accessible diagnostics which aid in providing advanced warning of possible failure events minimizing unplanned shutdowns, providing lower overall operational costs.

System Integration

- SmartLine communications protocols all meet the most current published standards for HART.
- All ST 700 units are Experion tested to provide the highest level of compatibility assurance

Configuration Tools

Integral Three Button Configuration Option

Suitable for all electrical and environmental requirements, SmartLine offers the ability to configure the transmitter and display via three externally accessible buttons when either display option is selected. Zero/span capabilities are also optionally available via these buttons with or without selection of a display option.

Handheld Configuration

SmartLine transmitters feature two-way communication and configuration capability between the operator and the transmitter. All Honeywell transmitters are designed and tested for compliance with the offered communication protocols and are designed to operate with any standards compliant handheld configuration device, such as Honeywell Versatilis Configurator.

Personal Computer Configuration

On a personal computer or laptop, Honeywell Field Device Manager (FDM) Software and FDM Express can be used for managing HART device configurations.

Modular Design

To help contain maintenance and inventory costs, all ST 700 transmitters are modular in design supporting the user's ability to replace meter bodies, standard displays or electronic modules without affecting overall performance. Each meter body is uniquely characterized to provide in-tolerance performance over a wide range of application variations in temperature and pressure.

Modular Features

- Meter body replacement
- Add or remove standard displays
- Add or remove lightning protection (terminal connection)

With no performance effects, *Honeywell's unique modularity results in lower inventory needs and lower overall operating costs.*

Performance Specifications

Reference Accuracy (conformance to +/-3 Sigma)

Table 1

Model	URL	LRL	Min Span	Maximum Turndown Ratio	Reference Accuracy[1,2] (% Span) Standard	Base Model	Stability[4] (Base Transmitter) (% URL/Yr for 15 years)
STR735D	100 psi (7.0 bar)	-100 psi (-7.0bar)	0.9 psi (0.062bar)	111:1	0.075	STD735	0.020
STR745G	500 psi (35 bar)	-14.7 psi (-1.0 bar)	5 psi (0.035 bar)	100:1	0.075/0.040	STG74S	0.020

Table 2

			Accuracy[1,2] (% of Span)				Combined Zero & Span temperature Effect[3] (% Span / 28°C (50°F))		
	Model	URL	Reference Turndown	A	B	C (see URL units)	D	E	F
Standard Accuracy	STR735D	100 psi (7.0 bar)	22:1	0.005	0.060	4.52 (0.311)	0.275	1.200	9 (0.622)
	STR745G	500 psi (35 bar)	20:1			25 (1.75)	Note 5		
High Accuracy Option	STR745G	500 psi (35 bar)	20:1	0.005	0.035	25 (1.75)			
			Turn Down Effect				Temperature Effect		
			$\pm[A+B]$ $if\ Span \geq C$ $\pm\left[A+B\left(\frac{C}{Span}\right)\right]$ $if\ Span < C$				$\pm[D+E\left(\frac{F}{Span}\right)]$ $\pm\left[A+B\left(\frac{F}{Span}\right)\right]$ $if\ Span < F$		

Accuracy at Specified Span, Temperature and Static Pressure: (conformance to +/-3 Sigma)

Total Performance (% of Span):

Total Performance = $\pm\sqrt{(Accuracy)2 + (Temp\ Effect)^2}$

Total Performance Examples (for comparison): (standard accuracy, 5:1 Turndown, up to 50 °F (28°C) shift)

STR735D @ 20 psid: 1.476% of span

Typical Calibration Frequency:

Calibration verification is recommended every four (4) years

Notes:

1.Terminal Based Accuracy – Includes combined effects of linearity, hysteresis, and repeatability. Analog output adds 0.006% of span.
2. For zero based spans and reference conditions of 25ºC (77ºF), 0 psi static pressure for DP, >= 0 psia for GP, 10 to 55% R.H, and 316 Stainless Steel barrier diaphragms.
3. Specification applies to transmitter with 2 balanced remote seals. Apply a 1.5 factor for temperature effect for capillary lengths greater than 10 feet.
4. Since the stability of an integrated seal system is subject to flange design, size, diaphragm, capillary length, fill fluid and so on, the published values are only for the base underlying transmitter without the seal.
5. For the model STR745G, transmitter capillary is on high pressure side only. The oil inside capillary expands and contracts with temperature which creates a small amount of pressure (capillary length and size) to sensor. Since there is no compensation to this minimal pressure change, performance spec is not specified. However, for reference purposes, values of the corresponding parameters can be referenced from the underlying base transmitters as published in Honeywell specifications 34-ST-03-122.

Operating Conditions – All Models

Parameter	Reference Condition (at zero static)		Rated Condition		Operative Limits		Transportation and Storage	
	°C	°F	°C	°F	°C	°F	°C	°F
Ambient Temperature[1]	25±1	77±2	-	-	-	-	-55 to 90	-67 to 194
Humidity %RH	10 to 55		0 to 100		0 to 100		0 to 100	
Vacuum Region, Minimum Pressure mmHg absolute	Atmospheric (See Figure 4 for vacuum limitation)							
Supply Voltage, Current, and Load Resistance	10.8 to 42.4 V DC at terminals (IS versions limited to 30 VDC) 0 to 1,440 ohms (as shown in Figure 2)							
Maximum Allowable Working Pressure (MAWP)[2] (ST 700 products are rated to Maximum Allowable Working Pressure. MAWP depends on Approval Agency and transmitter materials of construction.)	MAWP is minimum of Body Rating or Seal Rating (See Model Selection Guide for Seal MAWP) **Body** **MAWP** STR735D 750 psig (51.7 bar) Bolted Process Heads STR745G 500 psig (35 bar)							
Over Pressure	1.5 x MAWP of respective model							
No-Burst Pressure	**Transmitter MAWP (psi)** / **Minimum 'no-burst pressure'** MAWP <= 2,000 psi / 3x MAWP MAWP > 2,000 psi / 2.5x MAWP + 1000 psi							

[1] Ambient Temperature Limit is a function of Process Interface Temperature. (See Figures 3 & 4). LCD display ambient temperature: -30°C to +70°C. LCD display storage temperature: -30°C to +80°C. The display will be slower and may become unreadable as the ambient temperature drops below -20°C to -30°C. It will return to normal functionality once the ambient temperature rises above -20°C.

[2] Consult factory for MAWP of ST 700 transmitters with CRN approval.

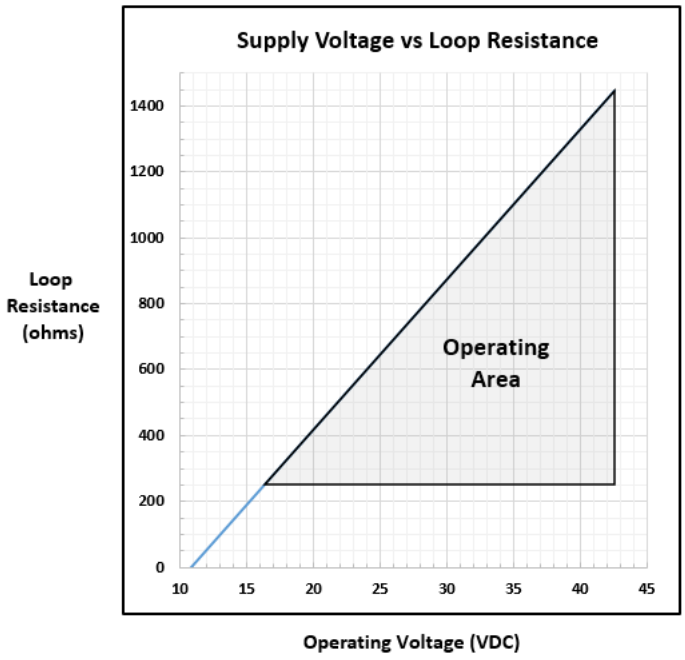

A minimum of 250 ohms loop resistance is required to support field communicator, where
Loop resistance is the summation of barrier resistance, wire resistance and receiver resistance

Maximum loop resistance
RLmax = 45.6 x (Power Supply Voltage - 10.8)

Figure 2 – Supply voltage and loop resistance

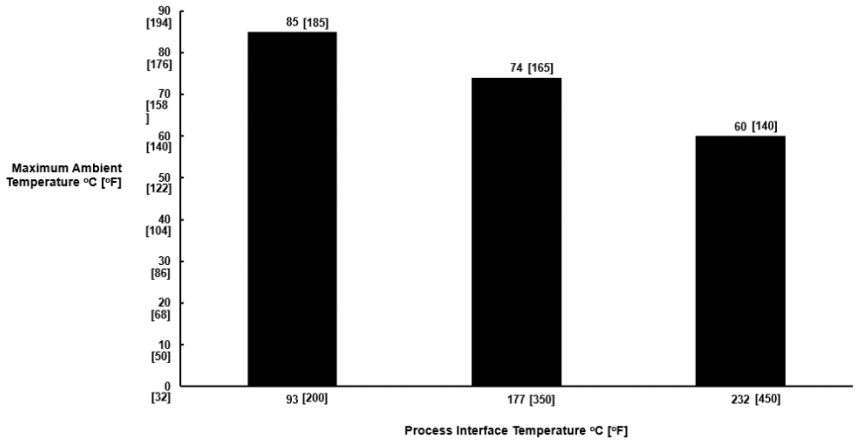

Figure 3- Ambient Temperature Limits

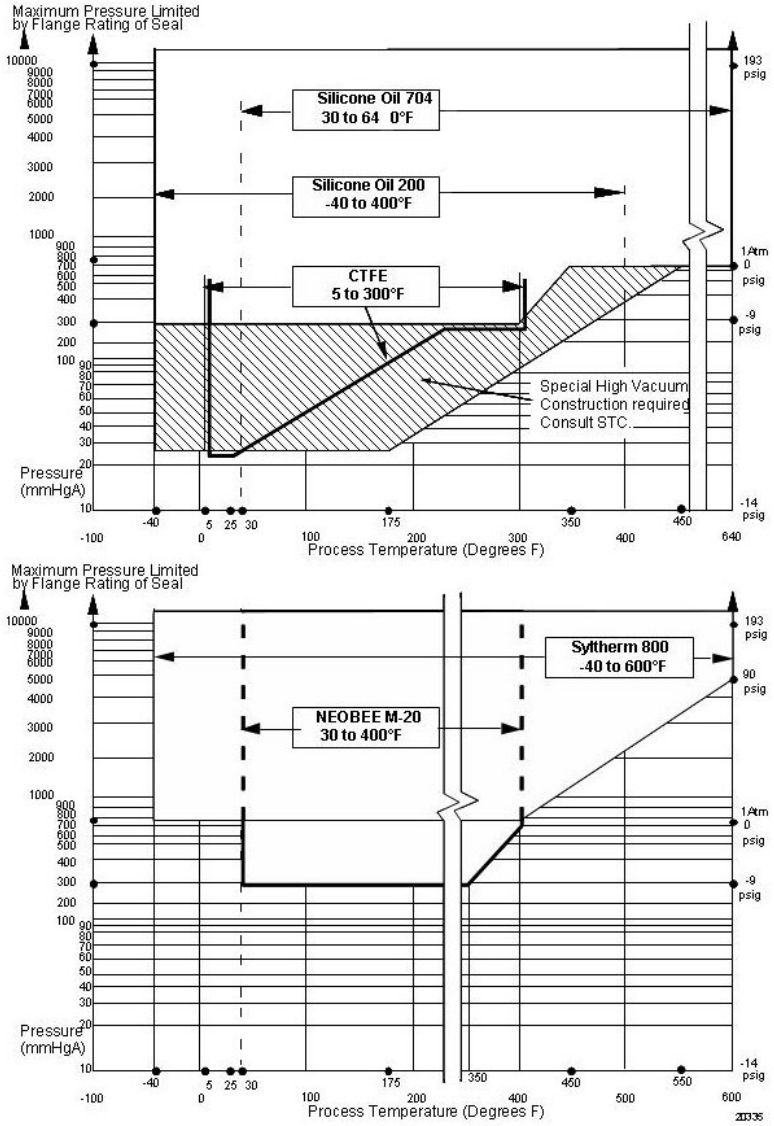

Figure 4 - STR700 Remote Seals operable limits for pressure vs. temperature

Performance Under Rated Conditions – All Models

Parameter	Description
Analog Output **Digital Communications**:	Two-wire, 4 to 20 mA HART protocol
HART Output Failure Modes	**Honeywell Standard** / **NAMUR NE 43 Compliance** **Normal Limits:** 3.8 – 20.8 mA / 3.8 – 20.5 mA **Failure Mode:** ≤ 3.6 mA and ≥ 21.0 mA / ≤ 3.6 mA and ≥ 21.0 mA
Supply Voltage Effect	0.005% span per volt
Transmitter Turn on Time (includes power up & test algorithms)	2.5 seconds
Damping Time Constant	Adjustable from 0 to 32 seconds in 0.1 increments. **Default:** 0.50 seconds
Electromagnetic Compatibility	IEC 61326-3-1
Lightning Protection Option	**Leakage Current:** 10uA max @ 42.4VDC 93C **Impulse rating:** 8/20us 5000A (>10 strikes) 10000A (1 strike min.) 10/1000us 200A (> 300 strikes)

Materials Specifications (see model selection guide for availability/restrictions with various models)

Parameter	Description
Process Interface	See Model Selection Guide for Material Options for desired seal type.
Seal Barrier Diaphragm	316L Stainless Steel, Monel®, Hastelloy® C, Tantalum
Seal Gasket Materials	Viton, Graphite, Teflon®
Mounting Bracket	Carbon Steel (Zinc-Chromate plated) or 304 Stainless Steel or 316 Stainless Steel.
Fill Fluid (Meter Body)	Silicone 200 S.G. @ 25°C = 0.94 CTFE (Chlorotrifluoroethylene) S.G. @ 25°C = 1.89
Fill Fluid (Secondary)	Silicone 200 S.G. @ 25°C = 0.94 CTFE (Chlorotrifluoroethylene) S.G. @ 25°C = 1.89 Silicone 704 S.G. @ 25°C = 1.07 Syltherm 800® S.G. @ 25°C = 0.90 NEOBEE M-20® S.G. @ 25°C = 0.93
Electronic Housing	Pure Polyester Powder Coated Low Copper (<0.4%) – Aluminum. Meets Type 4X / IP66 / IP67. Dual certified SS316/316L housing is optional. Cover O ring material: Silicone.
Capillary Tubing	**Material:** Armored Stainless Steel or PVC Coated Armored Stainless Steel. **Length:** 5, 10, 15, 20, 25, and 35 feet (1.5, 3, 4.6, 6.1, 7.5, and 10.7 meters). A 2 inch (51 millimeter) S.S. close-coupled nipple is also available. See Model Selection Guide. Refer to Table 3 for guide to maximum capillary length vs. diaphragm diameter. Note: The minimum span is the higher of the higher of the value from the table above or the value defined under the Performance Conditions for the range transmitter.
Wiring	Accepts up to 16 AWG (1.5 mm diameter)
Mounting	See Figure 5, Figure 6, and Figure 7
Dimensions	**Transmitter:** Figure 6 and Figure 7 **Seal:** Figure 8 through to Figure 13
Net Weight	**Transmitter:** 8.3 pounds (3.8 Kg). With Aluminum Housing. Total weight is dependent on seal

NOTE: Pressure transmitters that are part of safety equipment for the protection of piping (systems) or vessel(s) from exceeding allowable pressure limits, (equipment with safety functions in accordance with Pressure Equipment Directive 97/23/EC article 1, 2.1.3), require separate examination.

MINIMUM RECOMMENDED SPAN FOR STR735D TRANSMITTER WITH TWO SEALS

Diaphragm Size (Inch)	Capillary Length (Feet)						Maximum Capillary Length (Feet)
	5	10	15	20	25	35	
1.9	15 psi	20 psi	25 psi	-	-	-	15
2.4	5.4 psi	7.2 psi	9.0 psi	10.8 psi	12.6 psi	14.4 psi	35
2.9	1.8 psi	2.7 psi	3.6 psi	4.5 psi	5.4 psi	7.2 psi	35
3.5	0.9 psi	0.9 psi	0.9 psi	1.0 psi	1.2 psi	1.4 psi	35
4.1	0.9 psi	0.9 psi	0.9 psi	0.9 psi	0.9 psi	1.1 psi	35

MINIMUM RECOMMENDED SPAN FOR STR745G AND STR735D TRANSMITTER WITH ONE REMOTE SEAL

Diaphragm Size (Inch)	Direct Mount	Capillary Length (Feet)						Maximum Capillary Length (Feet)
		5	10	15	20	25	35	
1.9	25 psi	30 psi	40 psi	50 psi	-	-	-	15
2.4	10 psi	15 psi	20 psi	25 psi	30 psi	35 psi	50 psi	35
2.9	8 psi	9 psi	10 psi	11 psi	12 psi	13 psi	15 psi	35
3.5	2 psi	2 psi	3 psi	4 psi	5 psi	6 psi	8 psi	35
4.1	0.9 psi	0.9 psi	1 psi	2 psi	3 psi	3.5 psi	5 psi	35

Note: The minimum span is the higher of the higher of the value from the table above or the value defined under the Performance Conditions for the range transmitter.

Table 3 – Typical Maximum capillary length and diaphragm size chart

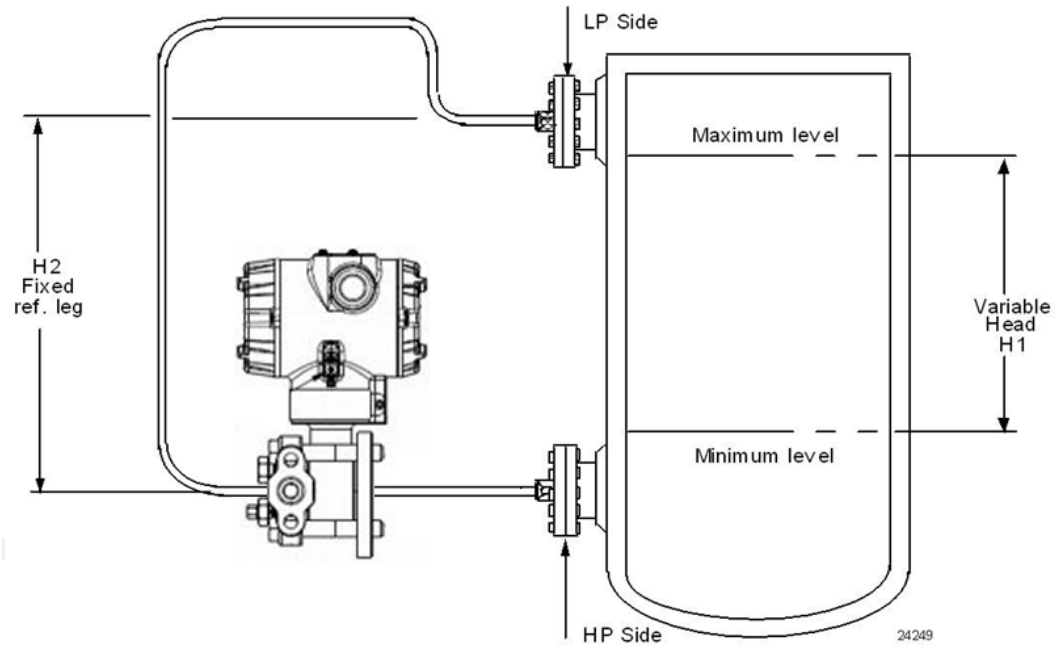

NOTE: Lower flange seal should not be mounted over 22 feet below or above the transmitter for silicone fill fluid (11 feet for CTFE fill fluid) with tank at one atmosphere. The combination of tank vacuum and high pressure capillary head effect should not exceed 9 psi vacuum (300 mmHg absolute).

Consult Honeywell for installation of STR735D

Figure 5 - STR700 transmitter with remote diaphragm seals shown mounted on a tank

Reference Dimensions Horizontal Mounting

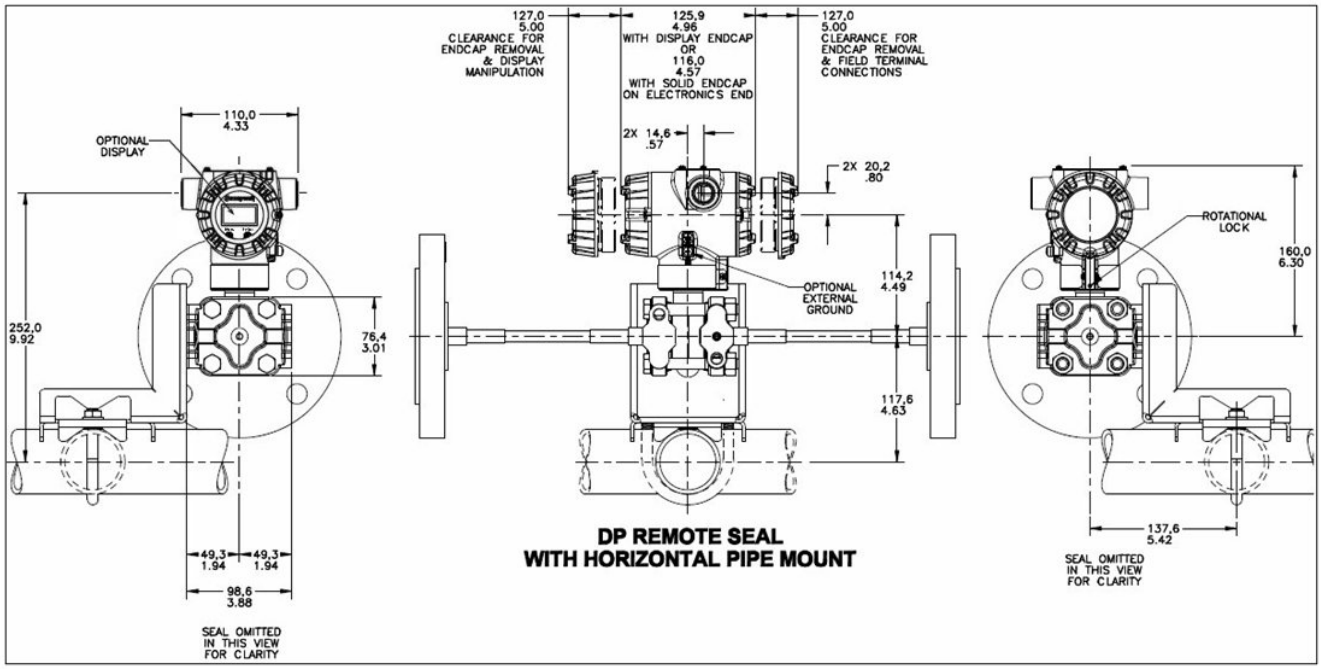

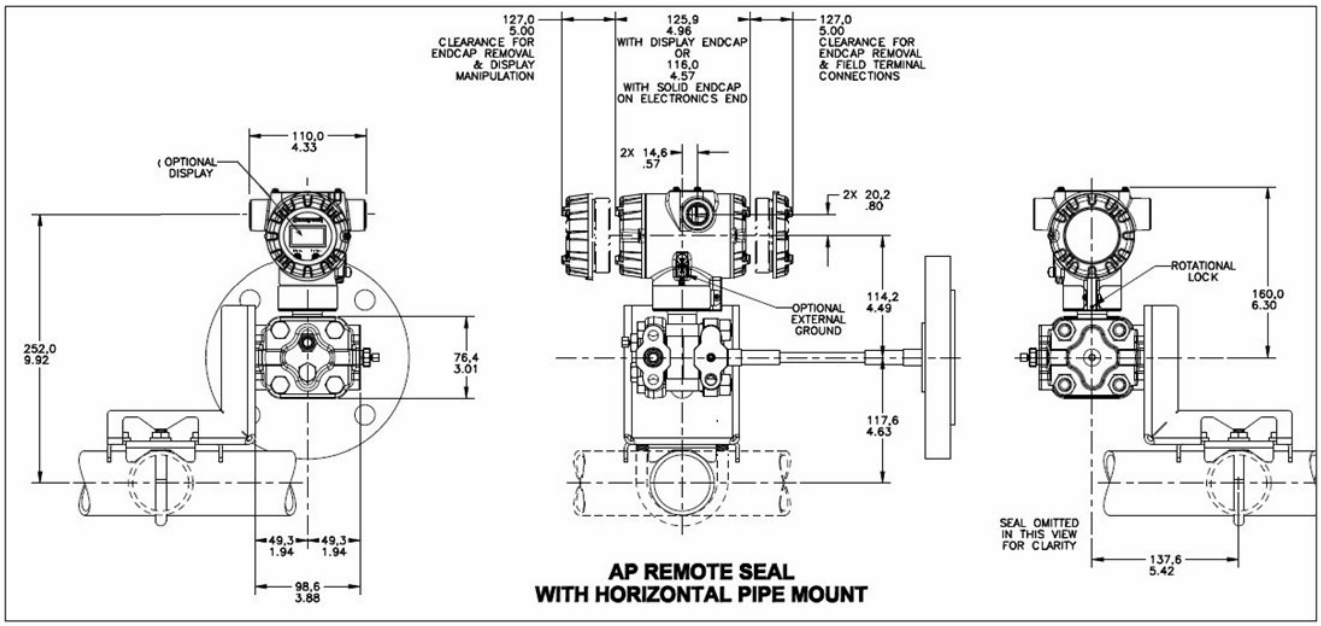

Reference Dimensions Horizontal Mounting (cont'd)

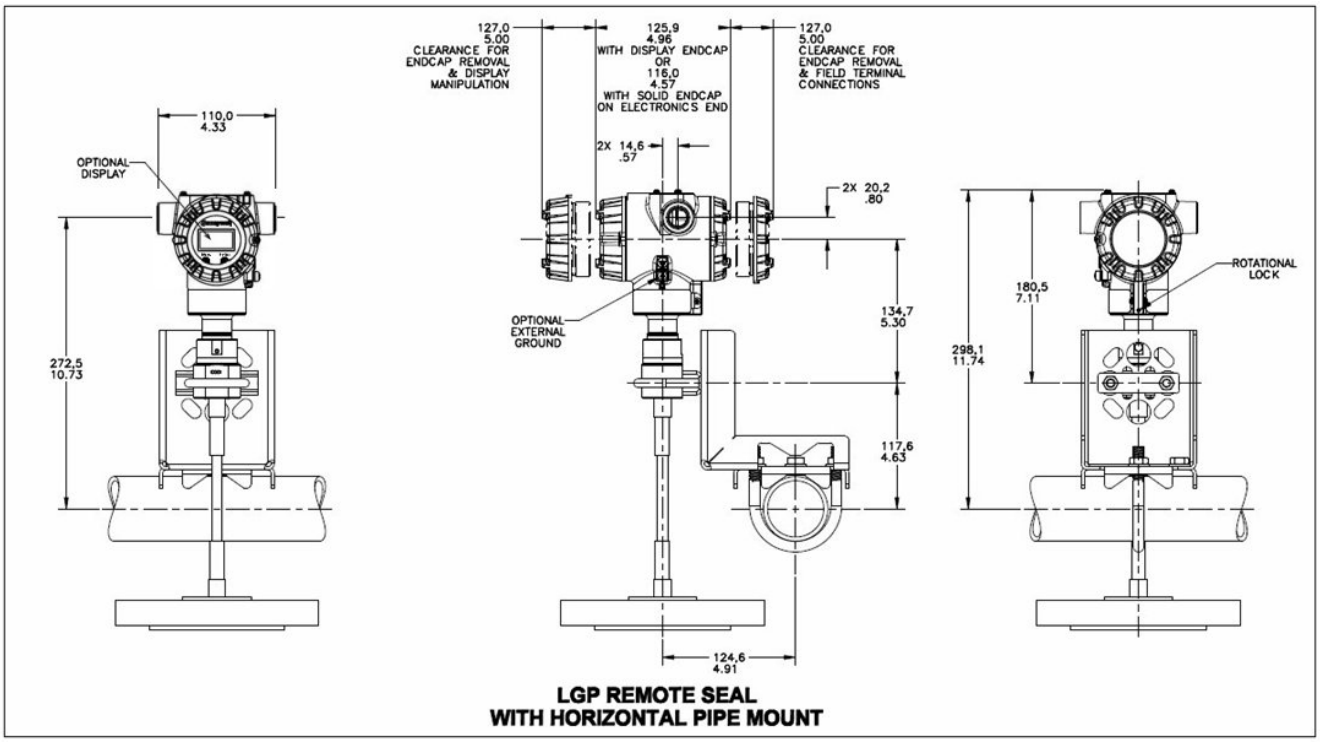

Figure 6 - Approximate Horizontal Mounting Dimensions for Remote Seal Transmitter

Reference Dimensions Vertical Mounting

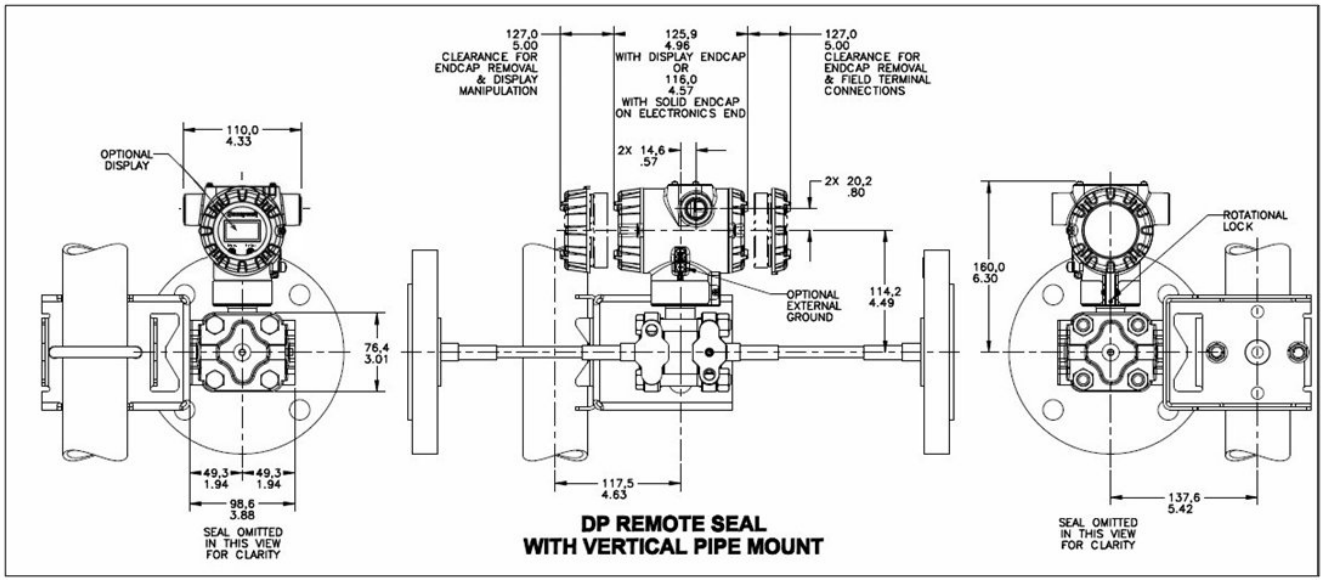

Reference Dimensions Vertical Mounting (cont'd)

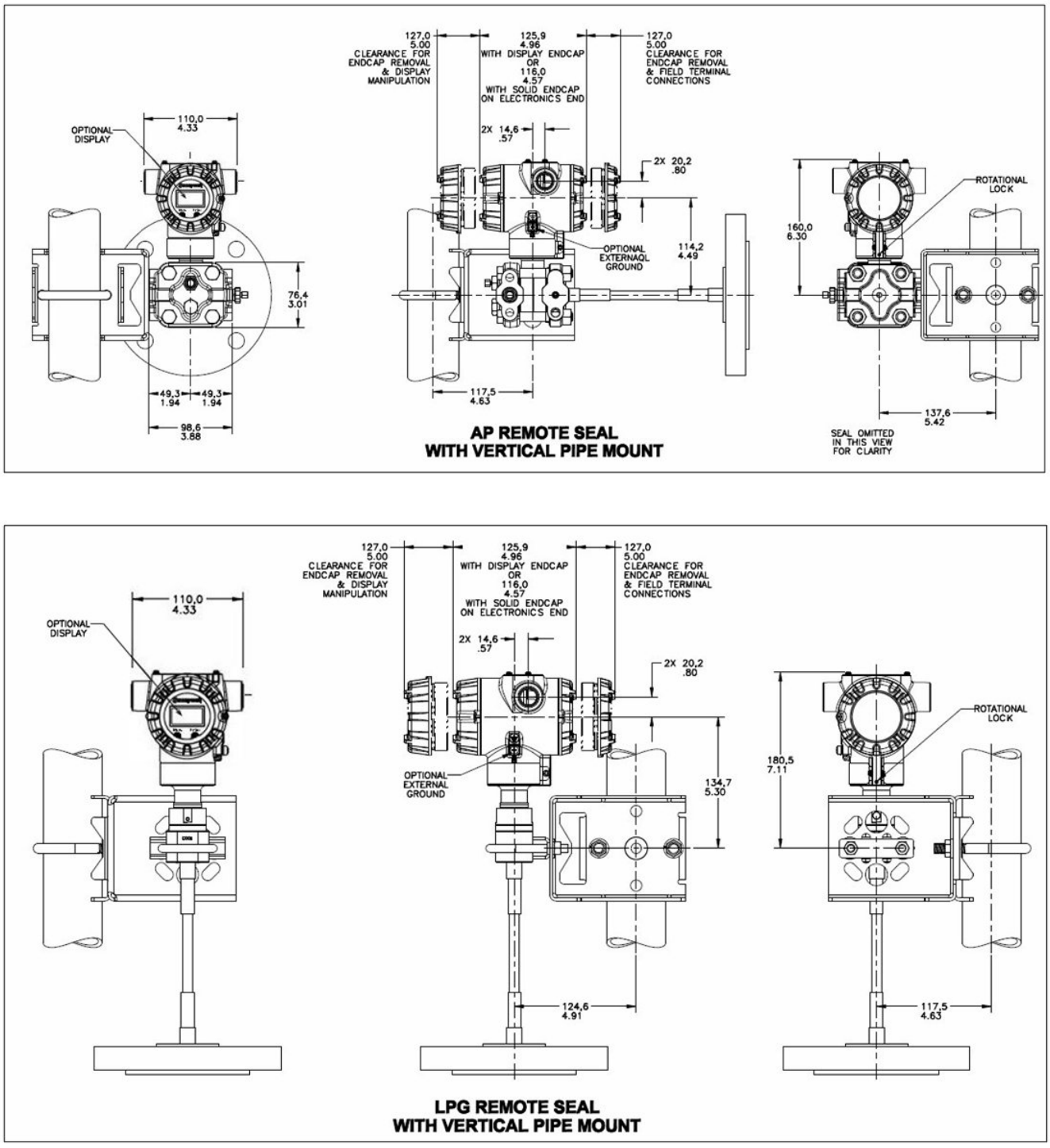

Figure 7 — Approximate vertical mounting dimensions for Remote Seal Transmitter

Reference Dimensions (cont'd)

Flush Flanged Seal Dimensions

Type	ANSI/DIN Rating	Flange Material	Wetted Materials		Construction See figure	↔	↕
			Diaphragm	Body		A	B
Flush Flanged Seal	3" Class 150#	CS	SS Hastelloy C Hastelloy C Monel Tantalum	SS SS Hastelloy C Monel SS	D C D D C	7.5	2.06
		SS	SS Hastelloy C Hastelloy C Monel Tantalum	N/A SS Hastelloy C Monel SS	B A D D C	7.50	0.94 2.06
	3" Class 300#	CS	SS Hastelloy C Hastelloy C Monel Tantalum	SS SS Hastelloy C Monel SS	D C D D C	8.25	2.25
		SS	SS Hastelloy C Hastelloy C Monel Tantalum	N/A SS Hastelloy C Monel SS	B A D D C	8.25	1.12 2.25
	3" Class 600#	CS	SS Hastelloy C Hastelloy C Monel Tantalum	SS SS Hastelloy C Monel SS	D C D D C	8.25	2.25
		SS	SS Hastelloy C Hastelloy C Monel Tantalum	N/A SS Hastelloy C Monel SS	B A D D C	8.25	1.5 2.25
	DN80-PN40	CS	SS Hastelloy C Hastelloy C Monel Tantalum	SS SS Hastelloy C Monel SS	D C D D C	7.87	1.95
		SS	SS Hastelloy C Hastelloy C Monel Tantalum	N/A SS Hastelloy C Monel SS	B A D D C	7.87	0.94 1.95

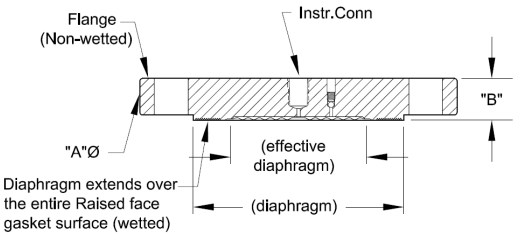

Configuration "HS"

Figure A

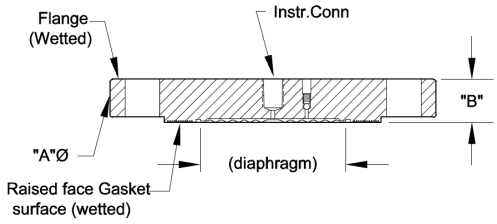

Configuration "HT"

Figure B

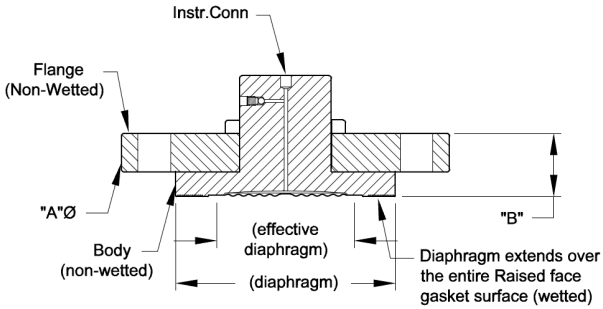

Configuration "IS"

Figure C

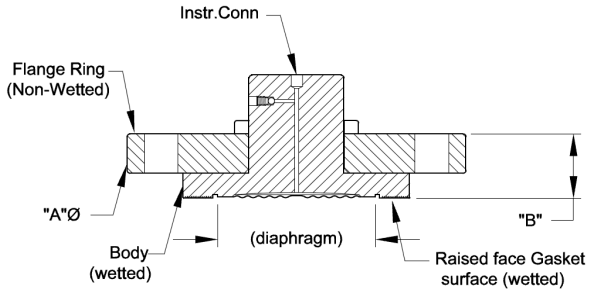

Configuration "IT"

Figure D

Figure 8 - Seal Dimensions (Flush Flanged)

Reference Dimensions (cont'd)

Flush Flanged Seal with Lower

Type	ANSI/DIN Rating	Size	Dimension	2.4" Diaphragm (52 mm effective)	2.9" Diaphragm (64 mm effective)	4.1" Diaphragm (35 mm effective)
Flush Flanged Seal with Lower	Class 150#	½"	A	3.74	N/A	5.91
			B0	1.55		2.21
			B1	1.55		2.21
			B2	1.70		2.21
		1"	A	4.33		5.91
			B0	1.33		2.05
			B1	1.33		2.05
			B2	1.48		2.05
		1-1/2"	A	5.00	4.92	5.91
			B0	1.33	2.33	1.97
			B1	1.33	2.33	1.97
			B2	1.48	2.83	1.97
		2"	A		6.00	5.91
			B0		2.36	1.89
			B1		2.36	1.89
			B2	N/A	2.86	1.89
		3"	A			7.50
			B0			2.55
			B1		N/A	2.55
			B2			3.05
	Class 300#	½"	A	3.74	N/A	5.91
			B0	1.55		2.21
			B1	1.55		2.21
			B2	1.70		2.21
		1"	A	4.92	N/A	5.91
			B0	1.33		2.05
			B1	1.33		2.05
			B2	1.48		2.05
		1-1/2"	A	6.12	6.10	6.10
			B0	1.48	2.45	2.21
			B1	1.48	2.45	2.21
			B2	1.63	2.95	2.21
		2"	A			6.50
			B0			2.49
			B1			2.49
			B2	N/A	N/A	2.99
		3"	A			8.25
			B0			2.74
			B1			2.74
			B2			3.24
	Class 600#	½"	A	3.74	N/A	5.91
			B0	1.71		2.36
			B1	1.71		2.35
			B2	1.87		2.35
		1"	A	4.88	N/A	5.91
			B0	2.36		2.26
			B1	2.36		2.26
			B2	2.86		2.26
		1-1/2"	A	6.12	6.12	6.10
			B0	1.33	2.55	2.21
			B1	1.33	2.55	2.21
			B2	1.48	3.05	2.21
		2"	A			6.50
			B0			2.68
			B1			2.68
			B2	N/A	N/A	3.18
		3"	A			8.25
			B0			2.93
			B1			2.93
			B2			3.43

B0 Without Flush
B1 B Dimension with1/4 NPT Flushing Connection
B2 B Dimension with 1/2 NPT Flushing Connection

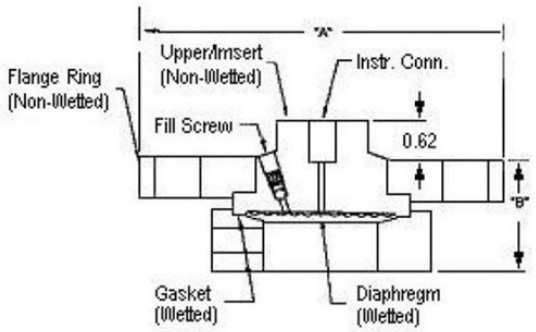

Flush Flanged Seal with Lower

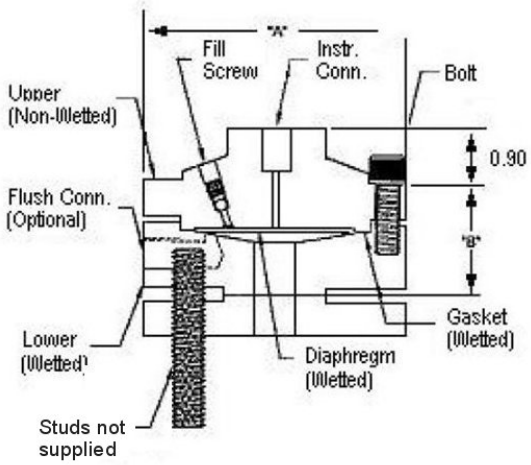

Flush Flanged Seal with Lower

Note: 0.90 dimension is 0.70 for 4.1" Dia Diaphragm

Figure 9 - Seal Dimension (Flush Flanged)

Reference Dimensions (cont'd)

Flanged Seal with Extended Diaphragm

Type	ANSI/DIN Rating	Dimension	2.8" Diaphragm Dia. (in.)	3.5" Diaphragm Dia. (in.)
Flanged Seal with Extended Diaphragm	3" Class 150#	A	7.50	-
		B	0.94	-
		C	2.80	-
	3" Class 300#	A	8.25	-
		B	1.12	-
		C	2.80	-
	DIN DN80-PN40	A	7.87	-
		B	0.94	-
		C	2.80	-
	4" Class 150#	A	-	9.00
		B	-	0.94
		C	-	3.70
	4" Class 300#	A	-	10.00
		B	-	1.25
		C	-	3.70
	DIN DN100-PN40	A	-	9.25
		B	-	0.94
		C	-	3.70

Designed to meet with schedule 40 pipe

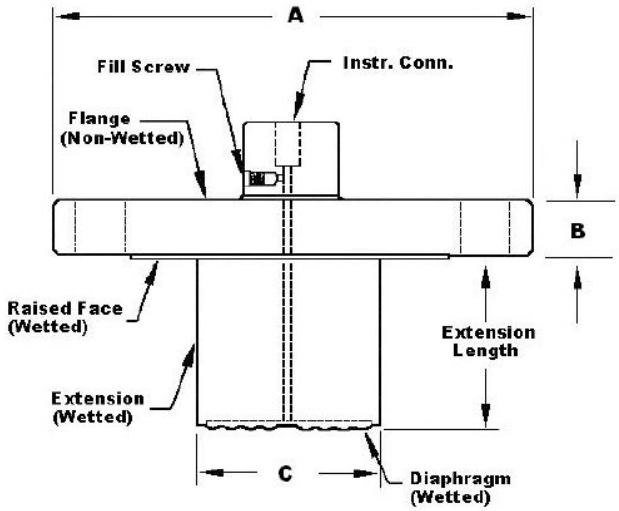

Figure 10 — Seal Dimensions (Extended Diaphragms)

Pancake Seal

Type	ANSI/DIN	Dimension	3.5" Diaph. (in.)
Pancake Seal	Class 150#, 300#, 600#	A	5.00
	DN80-PN40	B	1.08

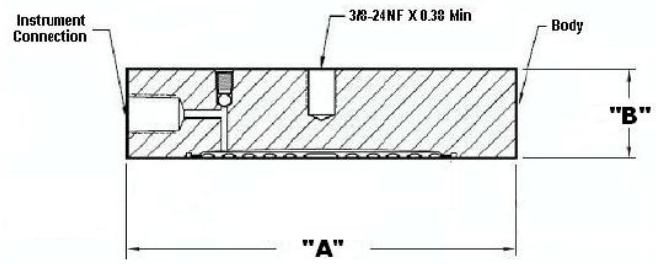

Figure 11 — Seal Dimensions (Pancake)

Seal with Threaded Process Connection

Type	Size	Dimensions	2.4" Diaphragm (52 mm effective)	4.1" Diaphragm (35 mm effective)
Threaded Process Conn. Seal	1/4" and 1/2"	A B0 B1 B2	3.74 2.20 2.20 3.50	5.90 2.50 2.50 2.75
	3/4" and 1"	A B0 B1 B2	3.74 2.40 2.40 3.70	5.90 2.80 2.80 3.05

B0 Without Flush
B1 B Dimension with ¼ NPT Flushing Connection
B2 B Dimension with ½ NPT Flushing Connection

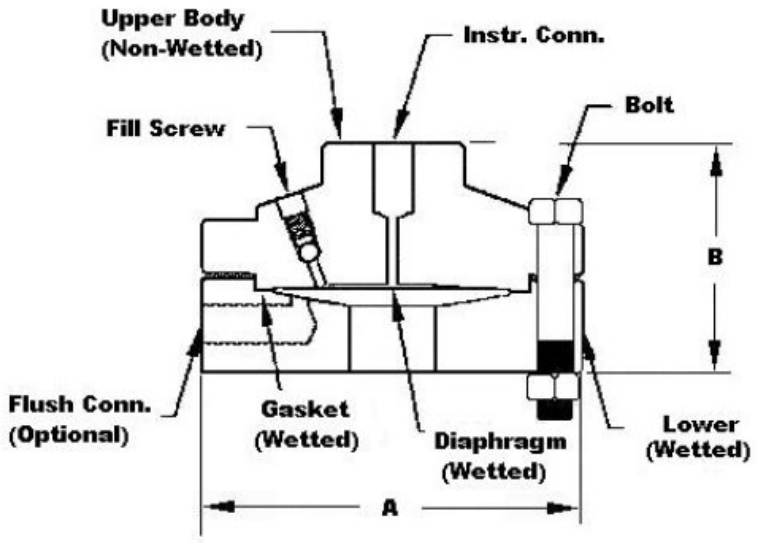

Figure 12— Seal Dimensions (Threaded Process Connection Seals)

Calibration Ring

Type	Size	Rating	Dimension	1/4 NPT	1/2 NPT
Calibration Ring	3"	150# / 600#	A B C	5.00 1.00 3.00	5.00 1.50 3.00

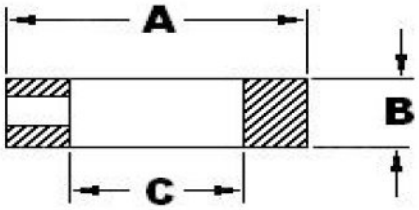

Figure 13— Calibration Ring

Communications Protocols & Diagnostics

HART Protocol

Version:

HART 7

Standard Diagnostics

ST 700 top level diagnostics are reported as either critical or non-critical and readable via the DD/DTM/FDI tools or Standard integral display. Some of the diagnostics are listed below:

Critical Diagnostics

- Electronics Module Fault.
- Meter body Memory Corruption.
- Config Data Corruption.
- Electronics Module Diagnostics Failure.
- Meter body Critical Failure.
- Sensor Communication Timeout.

Non-Critical Diagnostics

- Display Failure.
- Electronics Module Comm Failure.
- Meter body Excess Correct.
- Sensor Over Temperature.
- Fixed Current Mode.
- PV Out of Range.
- No DAC Compensation.

Refer to the product user manual for comprehensive list of diagnostics and details.

Hazardous Area Certifications:

MSG CODE	AGENCY	TYPE OF PROTECTION	COMM. OPTION	ELECTRICAL PARAMETERS	AMBIENT TEMP (Ta)
A	FM Approvals™ USA	**Explosionproof:** Class I, Division 1, Groups A, B, C, D; Dust Ignition Proof: Class II, III, Division 1, Groups E, F, G; T6..T5 Class I, Zone 0/1, AEx db IIC T6..T5 Ga/Gb Class II, Zone 21, AEx tb IIIC T95° Db	All	Note 1	T5: -50 ºC to 85ºC T6: -50 ºC to 65ºC
		Intrinsically Safe: Class I, II, III, Division 1, Groups A, B, C, D, E, F, G: T4 Class I, Zone 0, AEx ia IIC T4 Ga	4-20 mA / HART	Note 2	-50 ºC to 70ºC
		Nonincendive: Class I, Division 2, Groups A, B, C, D locations, T4 Class I, Zone 2, AEx nA IIC T4 Gc	4-20 mA HART	Note 1	-50 ºC to 85ºC
		Enclosure: Type 4X/ IP66/ IP67	All	All	-
		STANDARDS: FM Class 3600:2011; FM Class 3610: 2010; FM Class 3611: 2004; FM Class 3615: 2006; FM Class 3616: 2011; FM Class 3810: 2005; ANSI/ISA 60079-0: 2013; ANSI/UL 60079-1: 2015; ANSI/UL 60079-11: 2014; ANSI/ISA 60079-15: 2012; ANSI/UL 60079-26: 2017; ANSI/UL 60079-31: 2015; ANSI/NEMA 250: 2003; ANSI/ IEC 60529: 2004			
B	Canadian Standards Association (CSA) USA and Canada	**Explosion Proof:** Class I, Division 1, Groups A, B, C, D; Class II, Division 1, Groups E, F, G; Class III, Division 1, T6..T5 Class I Zone 1 AEx db IIC T6..T5 Ga/Gb Ex db IIC T6..T5 Ga/Gb Zone 22 AEx tb IIIC T95° Db Ex tb IIIC T95° Db	All	Note 1	T5: -50°C TO 85°C T6: -50°C TO 65°C
		Intrinsically Safe: Class I, II, III, Division 1, Groups A, B, C, D; Class II, Division 1, Groups E, F, G; Class III, Division 1, T4 Class I Zone 0, AEx ia IIC T4 Ga Class I Zone 2, AEx ic IIC T4 Gc Ex ia IIC T4 Ga Ex ic IIC T4 Gc	4-20 mA HART	Note 2	-50°C TO 70°C
		Nonincendive: Class I, Division 2, Groups A, B, C, D; Class II, Division 2, Groups F, G; Class III, Division 2, T4 Class I Zone 2 AEx nA IIC T4 Gc Ex nA IIC T4 Gc	4-20 HART	Note 1	-50°C to 85°C
		Enclosure: Type 4X/ IP66/ IP67	All	All	-
		STANDARDS: CSA C22.2 No. 0-10; CSA C22.2 No. 94-M91; CSA C22.2 No. 25-1966; CSA C22.2 No. 30-M1986; CSA C22.2 No. 142-M1987; CSA C22.2 No. 157-92; CSA C22.2 No. 213-M1987; CSA-C22.2 No. 60529:05; CSA-C22.2 No. 60079-0:11; CSA-C22.2 No. 60079-1:11; CSA-C22.2			

MSG CODE	AGENCY	TYPE OF PROTECTION	COMM. OPTION	ELECTRICAL PARAMETERS	AMBIENT TEMP (Ta)
		No. 60079-11:11; CSA-C22.2 No. 60079-15:12; CSA-C22.2 No. 60079-31:12; ISA 12.12.01-2010; ISA 60079-0: 2009; ISA 60079-11: 2011; ISA 60079-15: 2009; ISA 60079-26: 2008; ISA-60079-27:2007 (12.02.04)-2006 (R2011); UL 913 Ed. 6; UL 916:1998; ANSI/ISA-12.27.01-2011			
C	ATEX	**Flameproof: SIRA 12ATEX2233X**  II 1/2 G Ex db IIC T6..T5 Ga/Gb II 2 D Ex tb IIIC T95°C…T120°C Db	All	Note 1	T5: -50°C TO 85°C T6: -50°C TO 65°C
		Intrinsically Safe: SIRA 12ATEX2233X  II 1 G Ex ia IIC T4 Ga II 2 D Ex ia IIIC T125°C Db	4-20 mA / DE/ HART	Note 2	-50°C TO 70°C
		Zone 2, Increase Safety: SIRA 12ATEX4234X  II 3 G Ex ec IIC T4 Gc	4-20 mA HART	Note 1	-50°C TO 85°C
		Zone 2, Intrinsically Safe: SIRA 12ATEX4234X  II 3 G Ex ic IIC T4 Gc	4-20 mA HART	Note 2	-50°C TO 85°C
		Enclosure: IP66/ IP67	All	All	-
		STANDARDS: EN 60079-0: 2018; EN 60079-1: 2014; EN 60079-7: 2015+A1: 2018; EN 60079-11: 2012; EN 60079-26: 2015; EN 60079-31: 2014			
	UKEX	**Flameproof: CSAE 22UKEX1021X**  II 1/2 G Ex db IIC T6..T5 Ga/Gb II 2 D Ex tb IIIC T95°C…T120°C Db	All	Note 1	T5: -50°C TO 85°C T6: -50°C TO 65°C
		Intrinsically Safe: CSAE 22UKEX1021X  II 1 G Ex ia IIC T4 Ga II 2 D Ex ia IIIC T125°C Db	4-20 mA/ HART	Note 2	-50°C TO 70°C
		Zone 2, Increase Safety: SIRA 12ATEX4234X  II 3 G Ex ec IIC T4 Gc	4-20 mA/ HART	Note 1	-50°C TO 85°C
		Zone 2, Intrinsically Safe: SIRA 12ATEX4234X  II 3 G Ex ic IIC T4 Gc	4-20 mA/ HART	Note 2	-50°C TO 85°C
		Enclosure: IP66/ IP67	All	All	-
		STANDARDS: EN 60079-0: 2018; EN 60079-1: 2014; EN 60079-7: 2015+A1: 2018; EN 60079-11: 2012; EN 60079-26: 2015; EN 60079-31: 2014			
D	IECEx World	**Flameproof: IECEx SIR 12.0100X** Ex db IIC T6..T5 Ga/Gb Ex tb IIIC T95°C…T120°C Db	All	Note 1	T5: -50°C TO 85°C T6: -50°C TO 65°C
		Intrinsically Safe: IECEx SIR 12.0100X Ex ia IIC T4 Ga Ex ia IIIC T125oC Db	4-20 mA / HART	Note 2	-50°C TO 70°C
		Zone 2, Increase Safety: IECEx SIR 12.0100X Ex ec IIC T4 Gc	4-20 mA / HART		

MSG CODE	AGENCY	TYPE OF PROTECTION	COMM. OPTION	ELECTRICAL PARAMETERS	AMBIENT TEMP (Ta)
		Zone 2, Intrinsically Safe: IECEx SIR 12.0100X Ex ic IIC T4 Gc	4-20 mA / HART	Note 2	-50ºC TO 85ºC
		Enclosure: IP66/ IP67	All	All	-
		STANDARDS: IEC 60079-0: 2017; IEC 60079-1: 2014; IEC 60079-7: 2017; IEC 60079-11: 2011; IEC 60079-26: 2014; IEC 60079-31: 2013			
E	**SAEx South Africa**	**Flameproof :** Ex d IIC T6…T5 Ga/Gb Ex tb IIIC T95ºC…T120ºC Db	All	Note 1	T5: -50ºC TO 85ºC T6: -50ºC TO 65ºC
		Intrinsically Safe: Ex ia IIC Ga T4	4-20 mA / HART	Note 2	-50ºC TO 70ºC
		Zone 2, Increase Safety: II 3 G Ex ec IIC T4 Gc	4-20 mA / HART	Note 1	-50ºC TO 85ºC
		Zone 2, Intrinsically Safe: Ex ic IIC T4 Gc	4-20 mA / HART	Note 2	-50ºC TO 85ºC
		Enclosure: IP66/ IP67	All	All	-
F	**INMETRO Brazil**	**Flameproof:** Ex db IIC T6..T5 Ga/Gb Ex tb IIIC T95ºC…T120ºC Db	All	Note 1	T5: -50ºC TO 85ºC T6: -50ºC TO 65ºC
		Intrinsically Safe: Ex ia IIC T4 Ga	4-20 mA / HART	Note 2a	-50ºC TO 70ºC
		Zone 2, Increase Safety: II 3 G Ex ec IIC T4 Gc	4-20 mA / HART	Note 1	-50ºC TO 85ºC
		Zone 2, Intrinsically Safe: Ex ic IIC T4 Gc	4-20 mA / HART	Note 2	-50ºC TO 85ºC
		Enclosure : IP 66/67	All	All	-
G	**NEPSI CHINA**	**Flameproof:** Ex db IIC T6..T5 Ga/Gb Ex tb IIIC T 95ºC Db	All	Note 1	T5: -50ºC TO 85ºC T6: -50ºC TO 65ºC
		Intrinsically Safe: Ex ia IIC T4 Ga	4-20 mA / HART	Note 2	-50ºC TO 70ºC
		Zone 2, Increase Safety: II 3 G Ex ec IIC T4 Gc	4-20 mA / HART	Note 1	-50ºC TO 85ºC
		Zone 2, Intrinsically Safe: Ex ic IIC T4 Gc	4-20 mA / HART	Note 2	-50ºC TO 85ºC
		Enclosure : IP 66/67	All	All	-

I	**EAC Russia, Belarus and Kazakhstan**	**Flameproof:** Ga/Gb Ex d IIC T6..T5 Ex tb IIIC Db T 85°C	All	Note 1	T5: -50°C TO 85°C T6: -50°C TO 65°C
		Intrinsically Safe: Ga Ex ia IIC T4 X	4-20 mA / HART	Note 2	-50°C TO 70°C
		Zone 2, Non Sparking: 2 Ex nA IIC T4 Gc X	4-20 mA / HART	Note 1	-50°C TO 85°C
		Zone 2, Intrinsically Safe: Ga Ex ic IIC T4 X	4-20 mA / HART	Note 2	-50°C TO 85°C
		Enclosure : IP 66/67	All	All	
J	**CCoE INDIA**	**Flameproof:** Ex d IIC T6..T5 Ga/Gb	All	Note 1	T5: -50°C TO 85°C T6: -50°C TO 65°C
		Intrinsically Safe: Ex ia IIC T4 Ga	4-20 mA / HART	Note 2	-50°C TO 70°C
		Non Sparking Ex nA IIC T4 Gc	4-20 mA / HART	Note 1	-50°C TO 85°C
		Enclosure: IP66/ IP67	All	All	-
K	**UATR UKRAINE**	**Flameproof:** II 1/2 G Ex db IIC T6..T5 Ga/Gb II 2 D Ex tb IIIC T95°C…T120°C Db	All	Note 1	T5: -50°C TO 85°C T6: -50°C TO 65°C
		Intrinsically Safe: II 1 G Ex ia IIC T4 Ga	4-20 mA / HART	Note 2	-50°C TO 70°C
		Enclosure: IP66/ IP67	All	All	-

Notes:

1. Operating Parameters:
   Voltage = 11 to 42 V DC Current = 4-20 mA Normal

2. Intrinsically Safe Entity Parameters
   a. Analog/ HART Entity Values:

   Vmax = Ui = 30V Imax= Ii= 105mA Ci = 4.2nF Li = 984 uH Pi = 0.9W

   Transmitter with Terminal Block Revision E or Later

   Vmax = Ui = 30V Imax = Ii = 225mA Ci = 4.2nF Li = 0 Pi = 0.9W

   Note : Transmitter with Terminal Block Revision E or later

   The revision is on the label that is on the module. There will be two lines of text on the label:

   - First is the Module Part #: 50049839-001 or 50049839-002
   - Second line has the supplier information, along with the REVISION:

   XXXXXXX-EXXXX, THE “X” is production related, THE POSITION of the “E” IS THE REVISION.

Other Certification Options

SIL

SIL 2/3 Certification	IEC 61508 SIL 2 for non-redundant use and SIL 3 for redundant use according to EXIDA and TÜV Nord Sys Tec GmbH & Co. KG under the following standards: IEC61508-1: 2010; IEC 61508-2: 2010; IEC61508-3: 2010.

Materials

- NACE MR0175, MR0103, ISO15156

Application Data

Liquid Level: Closed Tank

Determine the minimum and maximum pressure differentials to be measured (Figure 14)

PMin = (SGp x a) - (SGf x d)
= LRV when HP at bottom of tank
= –URV when LP at bottom of tank

PMax = (SGp x b) - (SGf x d)
= URV when HP at bottom of tank
= –LRV when LP at bottom of tank

Where:

minimum level at 4mA
maximum level at 20 mA

a = distance between bottom tap and minimum level

b = distance between bottom tap and maximum level

d = distance between taps

SG_f = Specific Gravity of capillary fill fluid (See page 7 “Material Spec” for values.)

SG_p = Specific Gravity of process fluid

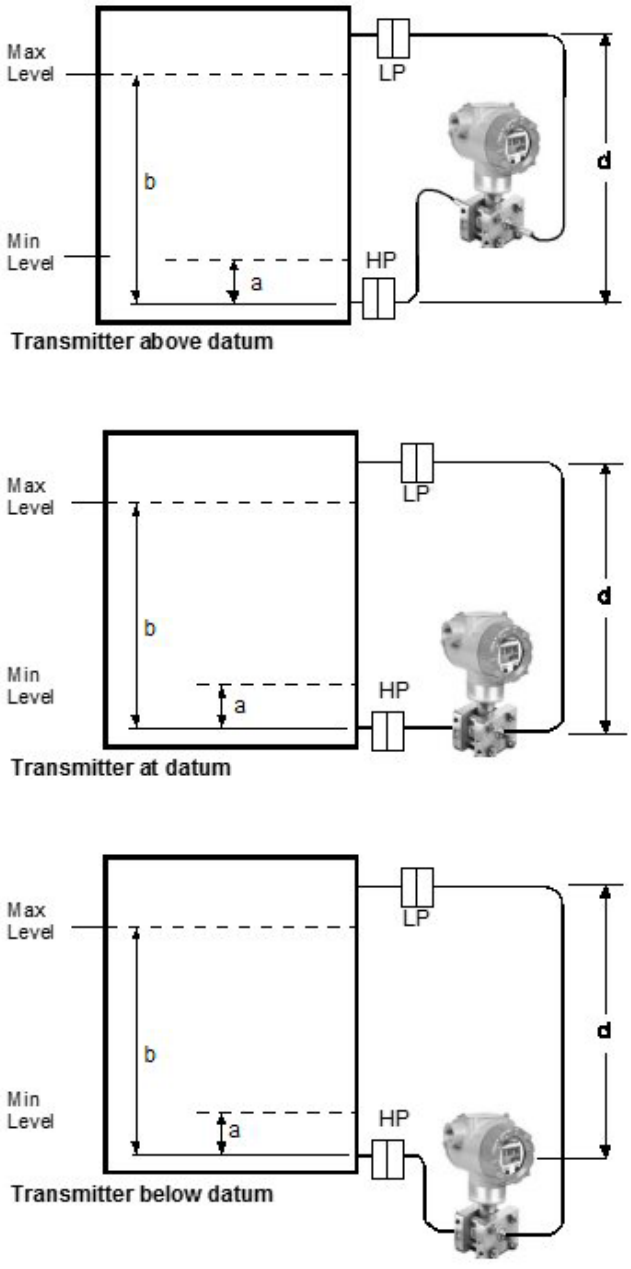

Figure 14—Closed tank liquid level measurement distance

Application Data (Cont'd)

Density or Interface*

Calculate the minimum and maximum pressure differentials to be measured. (Figure 15)

$P_{min} = (SG_{min} – SG_f) \times (d)$;
minimum density, 4mA output

$P_{max} = (SG_{max} – SG_f) \times (d)$;
maximum density, 20mA output

Where:
d = distance between the taps
SG_{max} = maximum Specific Gravity
SG_{min} = minimum Specific Gravity
SG_f = Specific Gravity of capillary fill fluid (See page 7 "Material Specifications" for values.)

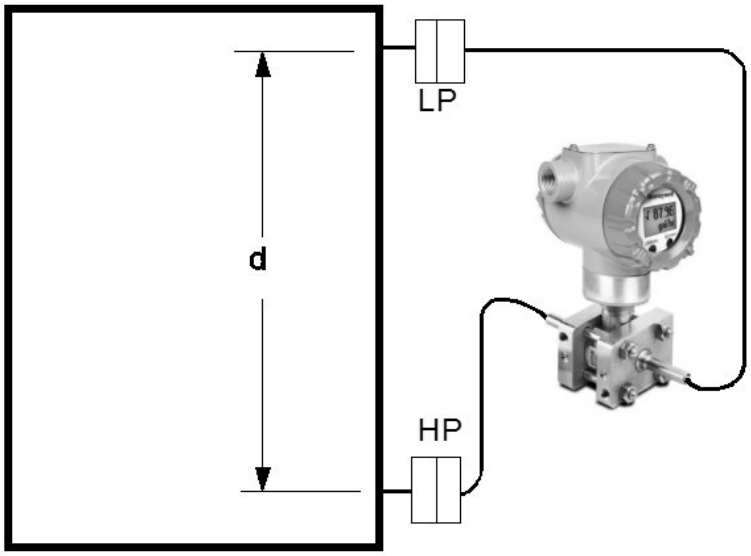

Figure 15- Density, direct acting transmitter configuration

Seal Configurations

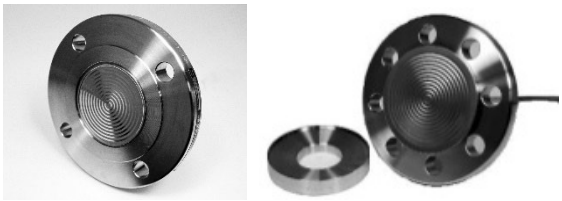

Figure 16—Flush Flange Seals and with Left Lower

Flush Flange Seals can be used with differential, gauge and absolute pressure transmitters and are available with 3" ANSI Class 150, ANSI Class 300 and DIN DN80-PN40 process connections. Flush flange seals can also be provided with Lowers. Lowers are essentially calibration rings, which allow flushing connections if needed.

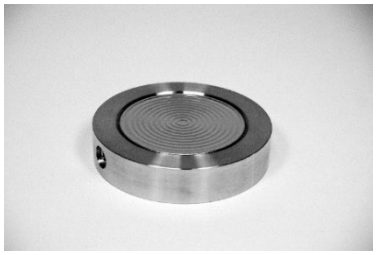

Figure 17—Pancake Seals

Pancake Seals can be used with differential, gauge and absolute pressure transmitters and are available with 3" ANSI Class 150, 300 and 600 process connections

Seal Configurations (cont'd)



Figure 18 — Flange Seal with Extended Diaphragm

Flange Seal with Extended Diaphragm can be used with differential, gauge and absolute pressure transmitters and are available with 3" and 4" ANSI Class 150, ANSI Class 300, DIN DN80-PN40 and DIN DN100-PN40 process connections. 2", 4" and 6" extension lengths are available

.



Figure 19— Seals with Threaded Process Connections

Seals with Threaded Process Connections can be used with differential, gauge and absolute pressure transmitters and are available with ½", ¾" and 1" NPT Female process connections.

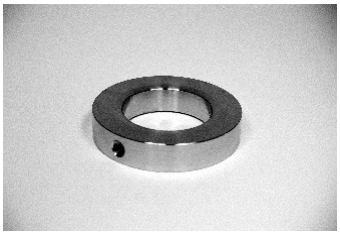

Figure 20 — Calibration Rings

Calibration Rings are available with Flush Flange Seals and Pancake Seals. Flushing ports (1/4" or ½") are available with calibration rings.



Figure 21 — Stainless Steel Armor and PVC Coated Stainless Steel Armor Capillaries

Stainless Steel Armor and PVC Coated Stainless Steel Armor Capillaries are available with Honeywell Remote Seal Solutions.



Figure 22 — 2" Stainless Steel Nipples

2" Stainless Steel Nipples are available for Close-Coupled remote seal solutions



Figure 23 — Welded Meter Body for All-Welded Remote Seal Solution

Welded Meter Body for All-Welded Remote Seal Solution. The welded ST 700 meter body is an important part of an All-Welded Remote Seal Solution, which is commonly used in Vacuum applications.

Model Selection Guide

Model Selection Guides are subject to change and are inserted into the specifications as guidance only.

Model STR700
(DP, GP) Remote Seals

Model Selection Guide	Issue
34-ST-16-124	23

Instructions

- Select the desired Key Number. The arrow to the right marks the selection available.
- Make selections from each Table (I, II and IX) using the column below the proper arrow.
- A (●) denotes unrestricted availability. A letter denotes restricted availability.
- Restrictions follow Table IX.

Key Number		I		II		III	IV	V	VI	VII		VIII	IX
STR7 _ _ _	-	_ _ _ _ _ _ _	-	_ _ _ _ _ _ _ _ _	-	_	_ _ _	_ _ _	_	_ _ _ _	-	_ _ ' _ _	+ 0000

KEY NUMBER	URL	LRL	Max Span	Min Span	Units	Selection	Availability	
Measurement Range Std Accuracy	100 (7)	-100 (-7)	100 (7)	0.9 (0.062)	psi (bar)	STR735D	↓	
	500 (35)	-14.7 (-1.0)	500 (35)	5 (0.35)	psi (bar)	STR745G		↓

Note: Remote seal system pressure rating is body rating or seal rating, whichever is less.

TABLE I	Description					Selection		
Meter Body & Capillaries	a. Number of Seals	1 Remote Seal (High Side)				1 _ _ _ _ _ _	●	●
		2 Remote Seals				2 _ _ _ _ _ _	●	
		1 Remote Seal (Low Side)				3 _ _ _ _ _ _	●	
	b. Primary Fill Fluid (Meter body)	Silicone Oil 200				_ 1 _ _ _ _ _	●	●
		Fluorinated Oil CTFE				_ 2 _ _ _ _ _	2	2
	c. Construction	Non-Wetted Adapter Head Materials						
	In-Line Gauge	316 SS Bonnet				_ _ A _ _ _ _		●
		316 SS Bonnet for Close-Couple				_ _ B _ _ _ _		3
	Dual Head DP	316 SS (bolt-on heads)				_ _ C _ _ _ _	●	
		316 SS for Close-Couple				_ _ D _ _ _ _	3	
		316 SS with all-welded meter body				_ _ E _ _ _ _	4	
	d. Bolts and Nuts forTransmitter Heads	None				_ _ _ 0 _ _ _	22	●
		Carbon Steel Bolts and Nuts				_ _ _ C _ _ _	●	
		316 SS Bolts and Nuts				_ _ _ S _ _ _	●	
		A286 SS (NACE) Bolts and 304 SS (NACE) Nuts				_ _ _ N _ _ _	●	
	e. Secondary Fill Fluid (capillary & seal)**	No Fill Fluid				_ _ _ _ 0 _ _	5	5
		Silicone Oil 200				_ _ _ _ 1 _ _	●	●
		Fluorinated Oil CTFE				_ _ _ _ 2 _ _	●	●
		Silicone Oil 704				_ _ _ _ 3 _ _	●	●
		Neobee® M20 [11]				_ _ _ _ 4 _ _	●	●
		Syltherm® 800 [12]				_ _ _ _ 5 _ _	●	●
	f. Connection of Remote Seal to Meter Body** 	No Capillary, No Nipple (Specify for VAM Unit Only)				_ _ _ _ _ 0 _	5	5
		Capillary Length	5 feet	1.5 m	SS Armor	_ _ _ _ _ A _	●	●
			10 feet	3.0 m		_ _ _ _ _ B _	●	●
			15 feet	4.5 m		_ _ _ _ _ C _	●	●
			20 feet	6.1 m		_ _ _ _ _ D _	●	●
			25 feet	7.5 m		_ _ _ _ _ E _	●	●
			35 feet	10.7 m		_ _ _ _ _ F _	●	●
			5 feet	1.5 m	PVC Coated SS Armor	_ _ _ _ _ G _	●	●
			10 feet	3.0 m		_ _ _ _ _ H _	●	●
			15 feet	4.5 m		_ _ _ _ _ J _	●	●
			20 feet	6.1 m		_ _ _ _ _ K _	●	●
			25 feet	7.5 m		_ _ _ _ _ L _	●	●
			35 feet	10.7 m		_ _ _ _ _ M _	●	●
		2 inch long SS nipple close-coupled				_ _ _ _ _ 2 _	6	6
	g. Seal Option**	None				_ _ _ _ _ _ 0	●	●
		Teflon Coated Seal Diaphragm - only for anti-sticking				_ _ _ _ _ _ 4	7	7

** Refer to 34-ST-00-128 for additional options, consult factory

[11] Limited vacuum availability.

[12] Minimum static pressure requirement. No vacuum allowed. See Specifications 34-ST-03-88 Figure 15

						STR745G	STR735D
Note: When selecting required seal, you must specify only the 9 selections within the required seal type.					**Selection**		
TABLE II	**Description**						
Seals	No Seal Attached to Core Transmitter (Specify for VAM Unit Only)				0 0 0 0 0 0 0 0 0	**21**	**21**
	Seal Type	**Diaphragm Diameter**	**Flange Size**	**Flange Pressure Rating** [1]	**Selection**		
		3.5"	3"	ANSI Class 150	AFA _ _ _ _ _ _	•	•
				ANSI Class 300	AFC _ _ _ _ _ _	•	•
			80mm	DIN DN80-PN40	AFM _ _ _ _ _ _	•	•
		Wetted Material		**Diaphragm** / **Upper Insert**	**Selection**		
				316L SS / 316L SS	_ _ _ AA _ _ _ _	•	•
				Hastelloy® C-276 / 316L SS	_ _ _ AB _ _ _ _	•	•
				Hastelloy® C-276 / Hastelloy® C-276	_ _ _ AC _ _ _ _	•	•
				Monel 400® / Monel 400®	_ _ _ AE _ _ _ _	**8**	**8**
				Tantalum [5] / 316L SS	_ _ _ AF _ _ _ _	**8**	**8**
		Non-Wetted Material (upper)		CS (Nickel Plated)	_ _ _ _ _ 1 _ _ _	•	•
				316L SS	_ _ _ _ _ 2 _ _ _	•	•
		Seal-Capillary Connection		Center Seal	_ _ _ _ _ _ 1 _ _	•	•
				Side Seal	_ _ _ _ _ _ 2 _ _	**9**	**9**
	Flush Flanged Seal**	Calibration Rings		None	_ _ _ _ _ _ _ A _	•	•
				316L SS	_ _ _ _ _ _ _ B _	**10**	**10**
				Hastelloy® C-276	_ _ _ _ _ _ _ C _	**10**	**10**
				Monel 400®	_ _ _ _ _ _ _ D _	**10**	**10**
		Flushing Connections and Plugs [4] (Metal plug material will be the same as Cal. ring material if metal plug is chosen)		None	_ _ _ _ _ _ _ _ 0	•	•
				One 1/4" with plastic plug	_ _ _ _ _ _ _ _ H	**11**	**11**
				One 1/4" with metal plug	_ _ _ _ _ _ _ _ J	**11**	**11**
				Two 1/4" with plastic plugs	_ _ _ _ _ _ _ _ M	**11**	**11**
				Two 1/4" with metal plugs	_ _ _ _ _ _ _ _ N	**11**	**11**
				One 1/2" with plastic plug	_ _ _ _ _ _ _ _ P	**11**	**11**
				One 1/2" with metal plug	_ _ _ _ _ _ _ _ Q	**11**	**11**
				Two 1/2" with plastic plugs	_ _ _ _ _ _ _ _ R	**11**	**11**
				Two 1/2" with metal plugs	_ _ _ _ _ _ _ _ S	**11**	**11**

Table II continued next page

** Refer to 34-ST-00-128 for additional options, consult factory

[1] Standard facing 125-250 AARH RF (raised face) serrated surface finish.

[4] Plastic Plugs are TEMPORARY ONLY to protect threads and MUST be REMOVED before installation

[5] Tantalum Upper insert has Tantalum wetted parts and 316 SS or CS non-wetted parts

Note: Remote seal system pressure rating is body rating or seal rating, whichever is less.

TABLE II	Descripton					Selection	STR745G	STR735D
	Seal Type	Diaphragm Diameter	Flange Size	Flange Pressure Rating [1]	Const. - See Spec. Figure 34-ST-03-104	Construction - See Spec. Figure 34-ST-03-104		
Seals (continued)	Flush Flanged Seal with Lower** 	2.4"	1"	ANSI 150	22	BCA _ _ _ _ _ _	•	•
				ANSI 300	22	BCC _ _ _ _ _ _	•	•
			1-1/2"	ANSI 150	22	BGA _ _ _ _ _ _	•	•
				ANSI 300	22	BGC _ _ _ _ _ _	•	•
		2.9"	1-1/2"	ANSI 150	22	CGA _ _ _ _ _ _	•	•
				ANSI 300	22	CGC _ _ _ _ _ _	•	•
			2"	ANSI 150	22	CDA _ _ _ _ _ _	•	•
		4.1"	1/2"	ANSI 150	22	DAA _ _ _ _ _ _	•	•
			1"	ANSI 150	23	DCA _ _ _ _ _ _	•	•
				ANSI 300	23	DCC _ _ _ _ _ _	•	•
			1-1/2"	ANSI 150	23	DGA _ _ _ _ _ _	•	•
				ANSI 300	23	DGC _ _ _ _ _ _	•	•
			2"	ANSI 150	23	DDA _ _ _ _ _ _	•	•
				ANSI 300	22	DDC _ _ _ _ _ _	•	•
			3"	ANSI 150	22	DFA _ _ _ _ _ _	•	•
				ANSI 300	22	DFC _ _ _ _ _ _	•	•
		Wetted Material		**Diaphragm**	**Lower**	**Selection**		
				316L SS	316L SS	_ _ _ BA _ _ _ _	•	•
				Hastelloy® C-276	316L SS	_ _ _ BB _ _ _ _	•	•
				Hastelloy® C-276	Hastelloy® C-276	_ _ _ BC _ _ _ _	•	•
				Monel 400®	Monel 400®	_ _ _ BE _ _ _ _	8	8
				Tantalum	316L SS	_ _ _ BF _ _ _ _	8	8
				Tantalum	Hastelloy® C-276	_ _ _ BG _ _ _ _	8	8
				Tantalum	Tantalum Clad	_ _ _ BH _ _ _ _	13	13
		Non-Wetted Material (upper, upper insert)		**Upper**	**Upper Insert**	**Selection**		
				316L SS	316L SS	_ _ _ _ _ 4 _ _ _	•	•
				Carbon Steel	316L SS	_ _ _ _ _ 5 _ _ _	•	•
		Bolts [6]		No Selection		_ _ _ _ _ _ 0 _ _	•	•
		Flushing Connections and Plugs [4] (Metal plug material will be the same as Lower material, if metal plug is chosen - (SS Plug for CS Lower and Tantalum Clad)		None		_ _ _ _ _ _ _ 0 _	•	•
				One 1/4" with plastic plug		_ _ _ _ _ _ _ H _	•	•
				One 1/4" with metal plug		_ _ _ _ _ _ _ J _	•	•
				Two 1/4" with plastic plugs		_ _ _ _ _ _ _ M _	•	•
				Two 1/4" with metal plugs		_ _ _ _ _ _ _ N _	•	•
				One 1/2" with plastic plug		_ _ _ _ _ _ _ P _	•	•
				One 1/2" with metal plug		_ _ _ _ _ _ _ Q _	•	•
				Two 1/2" with plastic plugs		_ _ _ _ _ _ _ R _	•	•
				Two 1/2" with metal plugs		_ _ _ _ _ _ _ S _	•	•
		Gasket		Klinger® C-4401 (non-asbestos)		_ _ _ _ _ _ _ _ K	•	•
				Viton		_ _ _ _ _ _ _ _ V	•	•
				Graphite		_ _ _ _ _ _ _ _ G	•	•
				Teflon®		_ _ _ _ _ _ _ _ T	•	•

Table II continued next page

** Refer to 34-ST-00-128 for additional options, consult factory

[1] Standard facing 125-250 AARH RF (raised face) serrated surface finish.

[6] Bolt material will be same as Upper Material. However, if Table I bolts/nuts material is NACE , seal bolt material will be 304 SS NACE.

[4] Plastic Plugs are TEMPORARY ONLY to protect threads and MUST be REMOVED before installation

Note: Remote seal system pressure rating is body rating or seal rating, whichever is less.

TABLE II	Descripton						STR745G	STR735D
	Seal Type	Diaphragm Diameter	Flange Size	Flange Pressure Rating [1]		Selection		
Seals (continued)	 Flange Seal with Extended Diaphragm**	2.8"	3" (2.8" OD extension)	ANSI Class 150		EFA _ _ _ _ _ _	•	•
				ANSI Class 300		EFC _ _ _ _ _ _	•	•
				DIN DN80-PN40		EFM _ _ _ _ _ _	•	•
		3.5"	4" (3.70" OD extension	ANSI Class 150		FGA _ _ _ _ _ _	•	•
				ANSI Class 300		FGC _ _ _ _ _ _	•	•
				DIN DN100-PN40		FGP _ _ _ _ _ _	•	•
		Wetted Material		Diaphragm	Ext. Tube	Selection		
				316L SS	316L SS	_ _ _ EA _ _ _ _	•	•
				Hastelloy® C-276	316L SS	_ _ _ EB _ _ _ _	•	•
				Hastelloy® C-276	Hastelloy® C-276	_ _ _ EC _ _ _ _	•	•
		Non-Wetted Material (flange)		CS (Nickel Plated)		_ _ _ _ _ 7 _ _ _	•	•
				316L SS		_ _ _ _ _ 8 _ _ _	•	•
		Bolts		No Selection		_ _ _ _ _ _ 0 _ _	•	•
		Extension Length		2"		_ _ _ _ _ _ _ 2 _	•	•
				4"		_ _ _ _ _ _ _ 4 _	•	•
				6"		_ _ _ _ _ _ _ 6 _	•	•
	No Selection	No Selection		No Selection		_ _ _ _ _ _ _ 0	•	•

Table II continued below

TABLE II	Descripton						STR745G	STR735D
	Seal Type	Diaphragm Diameter	Flange Size	Flange Pressure Rating Dependent on Customer Flange [1]		Selection		
Seals (continued)	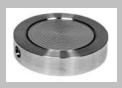 Pancake Seal	3.5"	3"	ANSI Class 150/300/600		GFA _ _ _ _ _ _	•	•
		Wetted Material		Diaphragm	Body			
				316L SS	316L SS	_ _ _ GA _ _ _ _	•	•
				Hastelloy® C-276	316L SS	_ _ _ GB _ _ _ _	•	•
				Hastelloy® C-276	Hastelloy® C-276	_ _ _ GC _ _ _ _	•	•
				Monel 400®	Monel 400®	_ _ _ GE _ _ _ _	8	8
				Tantalum	Tantalum [7]	_ _ _ GG _ _ _ _	8	8
		Non-Wetted Material		No Selection		_ _ _ _ _ 0 _ _ _	•	•
		Bolts		No Selection		_ _ _ _ _ _ 0 _ _	•	•
		Calibration Rings 		None		_ _ _ _ _ _ _ A _	•	•
				316L SS		_ _ _ _ _ _ _ B _	10	10
				Hastelloy® C-276		_ _ _ _ _ _ _ C _	10	10
				Monel 400®		_ _ _ _ _ _ _ D _	10	10
		Flushing Connections and Plugs[4] (Metal plug material will be the same as Cal. Ring material, if metal plug is chosen)		None		_ _ _ _ _ _ _ _ 0	•	•
				One 1/4" with plastic plug		_ _ _ _ _ _ _ _ H	11	11
				One 1/4" with metal plug		_ _ _ _ _ _ _ _ J	11	11
				Two 1/4" with plastic plugs		_ _ _ _ _ _ _ _ M	11	11
				Two 1/4" with metal plugs		_ _ _ _ _ _ _ _ N	11	11
				One 1/2" with plastic plug		_ _ _ _ _ _ _ _ P	11	11
				One 1/2" with metal plug		_ _ _ _ _ _ _ _ Q	11	11
				Two 1/2" with plastic plugs		_ _ _ _ _ _ _ _ R	11	11
				Two 1/2" with metal plugs		_ _ _ _ _ _ _ _ S	11	11

Table II continued next page

** Refer to 34-ST-00-128 for additional options, consult factory
[1] Standard facing 125-250 AARH RF (raised face) serrated surface finish.
[4] Plastic Plugs are TEMPORARY ONLY to protect threads and MUST be REMOVED before installation
[7] Tantalum Body has Tantalum wetted parts and 316 SS non-wetted parts

Note: Remote seal system pressure rating is body rating or seal rating, whichever is less.

TABLE II	Descripton						STR745G	STR735D
	Seal Type	Diaphragm Diameter	Threaded Process Connection Size (NPT Female)	Pressure Rating CS Bolts	Pressure Rating 304 SS Bolts	Selection		
Seals (continued)	Seal with Threaded Process Connection 	2.4"	1/2 NPT 3/4 NPT 1 NPT	2,500 psi	1,250 psi	JJG _ _ _ _ _ _ JKG _ _ _ _ _ _ JLG _ _ _ _ _ _	• • •	• • •
		4.1"	1/2 NPT 3/4 NPT 1 NPT	1,500 psi	750 psi	LJG _ _ _ _ _ _ LKG _ _ _ _ _ _ LLG _ _ _ _ _ _	• • •	• • •
		Wetted Material	Diaphragm	Lower		Selection		
			316L SS	Carbon Steel		_ _ _ JA _ _ _ _	•	•
			316L SS	316L SS		_ _ _ JB _ _ _ _	•	•
			Hastelloy® C-276	316L SS		_ _ _ JC _ _ _ _	•	•
			Hastelloy® C-276	Hastelloy® C-276		_ _ _ JD _ _ _ _	•	•
			Monel 400®	Monel 400®		_ _ _ JE _ _ _ _	8	8
			Tantalum	316L SS		_ _ _ JF _ _ _ _	8	8
			Tantalum	Hastelloy® C-276		_ _ _ JG _ _ _ _	8	8
		Non-Wetted Material (upper)	CS (Nickel Plated)			_ _ _ _ _ A _ _ _	•	•
			316 Stainless Steel			_ _ _ _ _ C _ _ _	17	17
		Bolts [8]	Carbon Steel			_ _ _ _ _ _ C _ _	•	•
			304 SS			_ _ _ _ _ _ D _ _	•	•
		Flushing Connections and Plugs[4] (Metal plug material will be the same as Lower material, if metal plug is chosen - (SS Plug for CS Lower and Tantalum Clad)	None			_ _ _ _ _ _ _ 0 _	•	•
			One 1/4" with plastic plug			_ _ _ _ _ _ _ H _	•	•
			One 1/4" with metal plug			_ _ _ _ _ _ _ J _	•	•
			Two 1/4" with plastic plugs			_ _ _ _ _ _ _ M _	•	•
			Two 1/4" with metal plugs			_ _ _ _ _ _ _ N _	•	•
			One 1/2" with plastic plug			_ _ _ _ _ _ _ P _	18	18
			One 1/2" with metal plug			_ _ _ _ _ _ _ Q _	18	18
			Two 1/2" with plastic plugs			_ _ _ _ _ _ _ R _	18	18
			Two 1/2" with metal plugs			_ _ _ _ _ _ _ S _	18	18
		Gasket	Viton			_ _ _ _ _ _ _ _ V	•	•
			Graphite			_ _ _ _ _ _ _ _ G	•	•
			Teflon®			_ _ _ _ _ _ _ _ T	•	•

[4] Plastic Plugs are TEMPORARY ONLY to protect threads and MUST be REMOVED before installation

[8] If Table I Bolts and Nuts material option is NACE, Bolts and Nuts will ship with Alloy Steel NACE and MAWP may change.

Note: Remote seal system pressure rating is body rating or seal rating, whichever is less.

TABLE III	Agency Approvals (see data sheet for Approval Code Details)	STR745G	STR735D
Approvals	No Approvals Required	0	●	●
	FM Explosion proof, Intrinsically Safe, Non-incendive, & Dustproof	A	●	●
	CSA Explosion proof, Intrinsically Safe, Non-incendive, & Dustproof	B	●	●
	ATEX Explosion proof, Intrinsically Safe & Non-incendive	C	●	●
	IECEx Explosion proof, Intrinsically Safe & Non-incendive	D	●	●
	SAEx Explosion proof, Intrinsically Safe & Non-incendive	E	●	●
	INMETRO Explosion proof, Intrinsically Safe & Non-incendive	F	●	●
	NEPSI Explosion proof, Intrinsically Safe & Non-incendive	G	●	●
	KOSHA Explosion proof, Intrinsically Safe & Non-incendive	H	●	●
	EAC-Customs Union(Russia,Belarus and Kazakhstan)EX Approval Flameproof,Intrinsically Safe	I	●	●
	CCoE Explosion proof, Intrinsically Safe & Non-incendive	J	●	●
	UATR Flameproof, Intrinsically Safe & Dustproof	K	●	●

TABLE IV	TRANSMITTER ELECTRONIC SELECTIONS					
a. Electronic Housing Material & Connection Type	Material	Connection	Lightning Protection			
	Polyester Powder Coated Aluminum	1/2 NPT	None	A _ _	●	●
	Polyester Powder Coated Aluminum	M20	None	B _ _	●	●
	Polyester Powder Coated Aluminum	1/2 NPT	Yes	C _ _	●	●
	Polyester Powder Coated Aluminum	M20	Yes	D _ _	●	●
	Dual Certified SS 316/316L (CF8M/CF3M)	1/2 NPT	None	E _ _	●	●
	Dual Certified SS 316/316L (CF8M/CF3M)	M20	None	F _ _	●	●
	Dual Certified SS 316/316L (CF8M/CF3M)	1/2 NPT	Yes	G _ _	●	●
	Dual Certified SS 316/316L (CF8M/CF3M)	M20	Yes	H _ _	●	●
b. Output/ Protocol	Analog Output	Digital Protocol				
	4-20mA dc Non-IS Non-SIL	HART Protocol Non-IS Non-SIL		_ N _	r	r
	4-20mA dc	HART Protocol		_ H _	●	●
c. Customer Interface Selections	Indicator	Ext Zero, Span & Config Buttons	Languages			
	None	None	None	_ _ 0	●	●
	None	Yes (Zero/Span Only)	None	_ _ A	●	●
	Standard (w/internal Zero, Span & Conf Buttons)	None	EN, RU	_ _ S	●	●
	Standard (w/internal Zero, Span & Conf Buttons)	Yes	EN, RU	_ _ T	●	●

TABLE V	CONFIGURATION SELECTIONS					
a. Application Software	Diagnostics					
	Standard Diagnostics			1 _ _	●	●
b. Output Limit, Failsafe & Write Protect Settings	Write Protect	Fail Mode	High & Low Output Limits[3]			
	Disabled	High> 21.0mAdc	Honeywell Std (3.8 - 20.8 mAdc)	_ 1 _	●	●
	Disabled	Low< 3.6mAdc	Honeywell Std (3.8 - 20.8 mAdc)	_ 2 _	●	●
	Enabled	High> 21.0mAdc	Honeywell Std (3.8 - 20.8 mAdc)	_ 3 _	●	●
	Enabled	Low< 3.6mAdc	Honeywell Std (3.8 - 20.8 mAdc)	_ 4 _	●	●
c. General Configuration	Factory Standard			_ _ S	●	●
	Custom Configuration (Unit Data Required from customer)			_ _ C	●	●

TABLE VI	CALIBRATION & ACCURACY SELECTIONS					
Accuracy and Calibration	Accuracy	Calibrated Range	Calibration Qty			
	NA	None	None	0	21	21
	Standard	Factory Std	Single Calibration	A	23	23
	Standard	Custom (Unit Data Required)	Single Calibration	B	23	23

[3] NAMUR Output Limits 3.8 - 20.5mAdc can be configured by the customer or select custom configuration Table Vc

TABLE VII	ACCESSORY SELECTIONS		STR745G	STR735D
	Bracket Type	**Material**		
a. Mounting Bracket	None	None	0 _ _ _	● ●
	Angle Bracket	Carbon Steel	1 _ _ _	● ●
	Angle Bracket	304 SS	2 _ _ _	● ●
	Angle Bracket	316 SS	3 _ _ _	● ●
	Marine Approved Bracket	Carbon Steel	8 _ _ _	y
	Marine Approved Bracket (In - Line)	Carbon Steel	9 _ _ _	●
	Marine Approved Bracket	304 SS	4 _ _ _	y
	Marine Approved Bracket (In - Line)	304 SS	A _ _ _	●
	Flat Bracket	Carbon Steel	5 _ _ _	● ●
	Flat Bracket	304 SS	6 _ _ _	● ●
	Flat Bracket	316 SS	7 _ _ _	● ●
b. Customer Tag	**Customer Tag Type**			
	No customer tag		_ 0 _ _	● ●
	One Wired Stainless Steel Tag (Up to 4 lines 26 char/line)		_ 1 _ _	● ●
	Two Wired Stainless Steel Tag (Up to 4 lines 26 char/line)		_ 2 _ _	● ●
c. Unassembled Conduit Plugs & Adapters	**Unassembled Conduit Plugs & Adapters**			
	No Conduit Plugs or Adapters Required		_ _ A0	● ●
	1/2 NPT Male to 3/4 NPT Female 316 SS Certified Conduit Adapter		_ _ A2	n n
	1/2 NPT 316 SS Certified Conduit Plug		_ _ A6	n n
	M20 316 SS Certified Conduit Plug		_ _ A7	m m

TABLE VIII	OTHER Certifications & Options : (String in sequence comma delimited (XX, XX, XX,....)		
Certifications & Warranty	None - No other options	00	* *
	NACE MR0175; MR0103; ISO15156 Process wetted parts only	FG	● ●
	NACE MR0175; MR0103; ISO15156 wetted and non-wetted parts	F7	c c
	Marine (DNV,ABS,BV,KR,LR)	MT	d d
	EN10204 Type 3.1 Material Traceability	FX	● ●
	Certificate of Conformance	F3	● ●
	Calibration Test Report & Certificate of Conformance	F1	● ●
	Certificate of Origin	F5	● ●
	FMEDA (SIL 2/3) Certification	FE	j j
	Over-Pressure Leak Test Certificate (1.5X MAWP)	TP	● ●
	Cert Clean for O_2 or CL_2 service per ASTM G93	OX	e e

b

b

TABLE IX	Manufacturing Specials	
Factory	**Factory Identification**	0 0 0 0 ● ●

MODEL RESTRICTIONS

Restriction Letter	Available Only With		Not Available With	
	Table	Selection(s)	Table	Selection(s)
b	Select only one option from this group			
c	Id	_ _ _ 0, N, _ _ _		
d	IVa	C, D, G, H _ _	VIIa	1, 2, 3, 5, 6, 7 _ _ _
e	I	_ 2 _ _ 2 _ _		
j	IVb		Vb	_ 1,2 _
m	IVa	B, D, F, H _ _		
n	IVa	A, C, E, G _ _		
y			Ic	_ _ E _ _ _ _
2	Ie	_ _ _ _ 0 _ _ _ _ _ _ 2 _ _ _ _ _ _ 4 _ _		
3	If	_ _ _ _ _ 2 _	Ia	2 _ _ _ _ _ _
4	I	2 _ _ 0 _ _ _		
5	II	000000000	VIII	FG, F7, FX, OX,TP,F1
6	Ic	_ _ B,D _ _ _ _	Ia	2 _ _ _ _ _ _
7			II	_ _ _ AF _ _ _ _ _ _ _ BF _ _ _ _ _ _ _ BG _ _ _ _ _ _ _ BH _ _ _ _ _ _ _ GG _ _ _ _ _ _ _ JF _ _ _ _ _ _ _ JG _ _ _ _
8			VIII	FG, F7
9	II	_ _ _ AA2 _ _ _ _ _ _ AB2 _ _ _		
10			II	_ _ _ _ _ _ _ _ 0
11			II	_ _ _ _ _ _ _ A _
13	II	_ _ _ _ _ _ _ 0 _	II VIII	_ _ _ _ _ _ _ _ T FG, F7
17			II	_ _ _ JA _ _ _ _
18			II	JJG _ _ _ _ _ _ JKG _ _ _ _ _ _ JLG _ _ _ _ _ _
21	I	_ _ _ _ 000		
22	Ic	_ _ E _ _ _ _		
23			II	000000000

FIELD INSTALLABLE REPLACEMENT PARTS

Description	Kit Number
Terminal Strip w/o Lightning Protection Kit for HART Modules	50129832-501
Terminal Strip w/ Lightning Protection for HART Modules	50129832-502
HART Electronics Module	50129828-501
HART Electronics Module w/ connection for external configuration buttons	50129828-502
Standard Display Module	50126003-501

Note P - For part number pricing please refer to E-Commerce portal.

PRODUCT MANUALS

Description	Part Number
ST 700 Smart Transmitter User Manual - English	34-ST-25-44
ST 700 Smart Transmitter HART Communications Manual - English	34-ST-25-47
ST 700 Smart Transmitter Safety Manual - English	34-ST-25-37

All product documentation is available at www.honeywellprocess.com.

Sales and Service

For application assistance, current specifications, ordering, pricing, and name of the nearest Authorized Distributor, contact one of the offices below.

ASIA PACIFIC

Honeywell Process Solutions,
Phone: + 800 12026455 or
+44 (0) 1202645583
(TAC) hfs-tac-support@honeywell.com

Australia
Honeywell Limited
Phone: +(61) 7-3846 1255
FAX: +(61) 7-3840 6481
Toll Free 1300-36-39-36
Toll Free Fax:
1300-36-04-70

China – PRC - Shanghai
Honeywell China Inc.
Phone: (86-21) 5257-4568
Fax: (86-21) 6237-2826

Singapore
Honeywell Pte Ltd.
Phone: +(65) 6580 3278
Fax: +(65) 6445-3033

South Korea
Honeywell Korea Co Ltd
Phone: +(822) 799 6114
Fax: +(822) 792 9015

EMEA

Honeywell Process Solutions,
Phone: + 800 12026455 or
+44 (0) 1202645583

Email: (Sales)
FP-Sales-Apps@Honeywell.com
or
(TAC)
hfs-tac-support@honeywell.com

Web

Knowledge Base search
engine http://bit.ly/2N5VIdi

AMERICAS

Honeywell Process Solutions,
Phone: (TAC) (800) 423-9883
or (215) 641-3610
(Sales) 1-800-343-0228

Email: (Sales)
FP-Sales-Apps@Honeywell.com
or
(TAC)
hfs-tac-support@honeywell.com

Web

Knowledge Base search
engine http://bit.ly/2N5VIdi

Specifications are subject to change without notice.

For more information
To learn more about SmartLine Transmitters,
visit www.process.honeywell.com
Or contact your Honeywell Account Manager

Process Solutions
Honeywell
1250 W Sam Houston Pkwy S
Houston, TX 77042

Honeywell Control Systems Ltd
Honeywell House, Skimped Hill Lane
Bracknell, England, RG12 1EB

Shanghai City Centre, 100 Jungi Road
Shanghai, China 20061

www.process.honeywell.com

34-ST-03-124
December 2025
©2025 Honeywell International Inc.