2-3 WE Type – Four-Row Wide Rail Linear Guideway

2-3-1 Construction

The WE series features equal load ratings in the radial, reverse radial and the lateral direction with contact points at 45 degrees. This along with the wide rail, allows the guide way to be rated for high loads, moments and rigidity. By design, it has a self-aligning capacity that can absorb most installation errors and can meet high accuracy standards. The ability to use a single rail and to have the low profile with a low center of gravity is ideal where space is limited and/or high moments are required.

2-3-2 Construction of WE Series

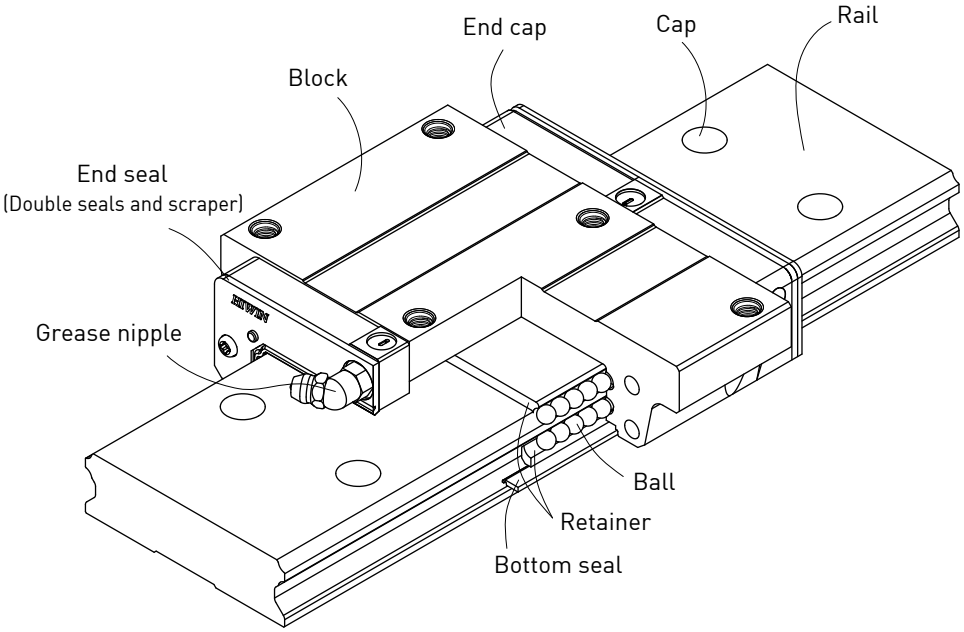

- Rolling circulation system: Block, rail, end cap and retainer
- Lubrication system: Grease nipple and piping Joint
- Dust protection system: End seal, bottom seal, cap and scraper

2-3-3 Model Number of WE Series

WE series linear guideways are classified into non-interchangeable and interchangeable types. The sizes of these two types are the same as one another. The main difference is that the interchangeable type of blocks and rails can be freely exchanged and they can maintain P-class accuracy. Because of strict dimensional control, the interchangeable type linear guideways are a wise choice for customers when rails do not need to be matched for an axis. The model number of the WE series identifies the size, type, accuracy class, preload class, etc.

WE Series

Four-Row Wide Rail

(1) Non-interchangeable type

WE W 27 C C E 2 R 1600 E ZA P II + KK+RC

- WE Series
- Block Type
  W : Flange Type
  H : Square Type
- Model size
  17, 21, 27, 35, 50
- Load Type
  C : Heavy Load
- Block Mounting Type
  A : Mounting From Top
  C : Top or Bottom
- E: Special Block
  None: Standard Block
- No. of Blocks per Rail
- Rail Mounting Type
  R : Mounting From Top
  T : Bottom
- Rail Length (mm)
- E: Special Rail
  None: Standard rail
- Preload Code: Z0, ZA, ZB
- Precision Code:
  C, H, P, SP, UP
- NO. of Rail per Axis set [1]
- Dust Protection[2]
- RC:Reinforced Cap

Note: 1. The roman numerals are used to express the number of matched rails used in one axis. When a single rail is used in an axis, no symbol is indicated.
2. No symbol indicates standard protection (end seal and bottom seal).
ZZ : End seal, bottom seal and scraper
KK: Double seals, bottom seal and scraper.
DD: Double seals and bottom seal

(2) Interchangeable type

Model Number of WE Block

WE W 27 C C E ZA P + KK

- WE Series
- Block Type
  W : Flange Type
  H : Square Type
- Model size
  17, 21, 27, 35, 50
- Load Type
  C : Heavy Load
- Block Mounting Type
  A : Mounting From Top
  C : Top or Bottom
- E: Special Block
  None: Standard block
- Preload Code : Z0, ZA
- Precision Code : C, H, P
- Dust Protection[2]

Model Number of WE Rail

WE R 27 R 1600 E P + RC

- WE Series
- Interchangeable Rail
- Model size
  17, 21, 27, 35, 50
- Rail Mounting Type
  R : Mounting From Top
  T : Bottom
- Rail Length (mm)
- E : Special Rail,
  None : Standard Rail
- Precision Code : C, H, P
- RC : Reinforced Cap

2-3-4 Types

(1) Block types

HIWIN offers two types of linear guideways, flange and square types.

Table 2-3-1 **Block Types**

Type	Model	Shape	Height (mm)	Rail Length (mm)	Main Applications
Square	WEH-CA 17, 21	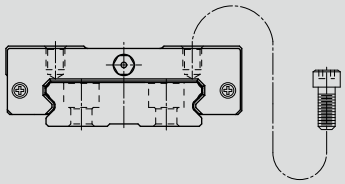	17 ↓ 21	100 ↓ 4000	Automation devices High-speed transportation equipment Precision measuring equipment Semiconductor manufacturing equipment Blow Moulding machines Single Axis Robot-Robotics Single Axis Equipment with High Anti-rolling Requirement
Square	WEH-CA 27, 35, 50	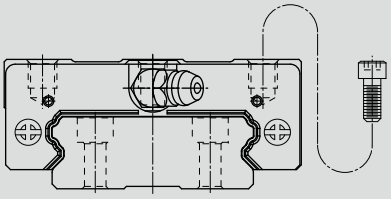	27 ↓ 50	100 ↓ 4000	
Flange	WEW-CC	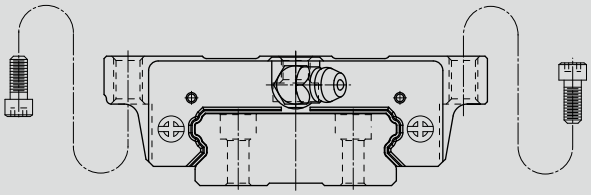	17 ↓ 50	100 ↓ 4000	

(2) Rail types

Besides the standard top mounting type, HIWIN also offers bottom mounting type rails.

Table 2-3-2 **Rail Types**

Mounting from Top	Mounting from Bottom
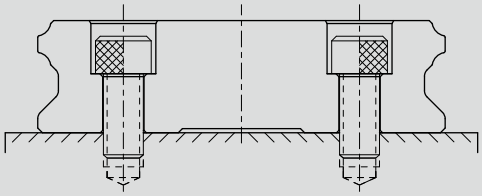	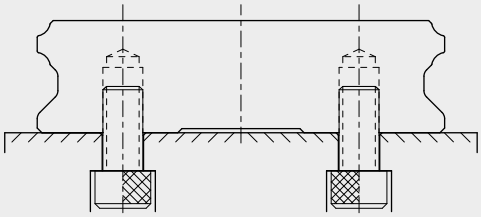

2-3-5 Accuracy

The accuracy of the WE series can be classified into 5 classes: normal(C), high(H), precision(P), super precision(SP), and ultra precision(UP). Choose the class by referencing the accuracy of selected equipment.

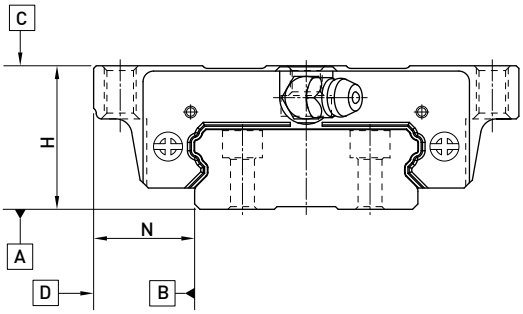

(1) Accuracy of non-interchangeable guideways

Table 2-3-3 **Accuracy Standards** Unit: mm

Type	WE - 17, 21					WE - 27, 35				
Accuracy Classes	Normal (C)	High (H)	Precision (P)	Super Precision (SP)	Ultra Precision (UP)	Normal (C)	High (H)	Precision (P)	Super Precision (SP)	Ultra Precision (UP)
Dimensional tolerance of height H	±0.1	±0.03	0 - 0.03	0 - 0.015	0 - 0.008	± 0.1	± 0.04	0 - 0.04	0 - 0.02	0 - 0.01
Dimensional tolerance of width N	±0.1	±0.03	0 - 0.03	0 - 0.015	0 - 0.008	± 0.1	± 0.04	0 - 0.04	0 - 0.02	0 - 0.01
Variation of height H	0.02	0.01	0.006	0.004	0.003	0.02	0.015	0.007	0.005	0.003
Variation of width N	0.02	0.01	0.006	0.004	0.003	0.03	0.015	0.007	0.005	0.003
Running parallelism of block surface C to surface A	See Table 2-3-5									
Running parallelism of block surface D to surface B	See Table 2-3-5									

Type	WE - 50				
Accuracy Classes	Normal (C)	High (H)	Precision (P)	Super Precision (SP)	Ultra Precision (UP)
Dimensional tolerance of height H	±0.1	±0.05	0 - 0.05	0 - 0.03	0 - 0.02
Dimensional tolerance of width N	±0.1	±0.05	0 - 0.05	0 - 0.03	0 - 0.02
Variation of height H	0.03	0.015	0.007	0.005	0.003
Variation of width N	0.03	0.02	0.01	0.007	0.005
Running parallelism of block surface C to surface A	See Table 2-3-5				
Running parallelism of block surface D to surface B	See Table 2-3-5				

(2) Accuracy of interchangeable guideways

Table 2-3-4 **Accuracy Standards** Unit: mm

Item	WE - 17, 21			WE - 27, 35			WE - 50		
Accuracy Classes	Normal (C)	High (H)	Precision (P)	Normal (C)	High (H)	Precision (P)	Normal (C)	High (H)	Precision (P)
Dimensional tolerance of height H	± 0.1	± 0.03	± 0.015	± 0.1	± 0.04	± 0.02	± 0.1	± 0.05	± 0.025
Dimensional tolerance of width N	± 0.1	± 0.03	± 0.015	± 0.1	± 0.04	± 0.02	± 0.1	± 0.05	± 0.025
Variation of height H	0.02	0.01	0.006	0.02	0.015	0.007	0.03	0.015	0.007
Variation of width N	0.02	0.01	0.006	0.03	0.015	0.007	0.03	0.02	0.01
Running parallelism of block surface C to surface A	See Table 2-3-5								
Running parallelism of block surface D to surface B	See Table 2-3-5								

(3) Accuracy of running parallelism

Table 2-3-5 **Accuracy of Running Parallelism**

Rail Length (mm)	Accuracy (μm)				
	C	H	P	SP	UP
~ 100	12	7	3	2	2
100 ~ 200	14	9	4	2	2
200 ~ 300	15	10	5	3	2
300 ~ 500	17	12	6	3	2
500 ~ 700	20	13	7	4	2
700 ~ 900	22	15	8	5	3
900 ~ 1,100	24	16	9	6	3
1,100 ~ 1,500	26	18	11	7	4
1,500 ~ 1,900	28	20	13	8	4
1,900 ~ 2,500	31	22	15	10	5
2,500 ~ 3,100	33	25	18	11	6
3,100 ~ 3,600	36	27	20	14	7
3,600 ~ 4,000	37	28	21	15	7

2-3-6 Preload

(1) Definition

A preload can be applied to each guideway. Generally, a linear motion guideway has a negative clearance between the groove and balls in order to improve stiffness and maintain high precision. The figure shows that adding a preload can improve stiffness of the linear guideway.

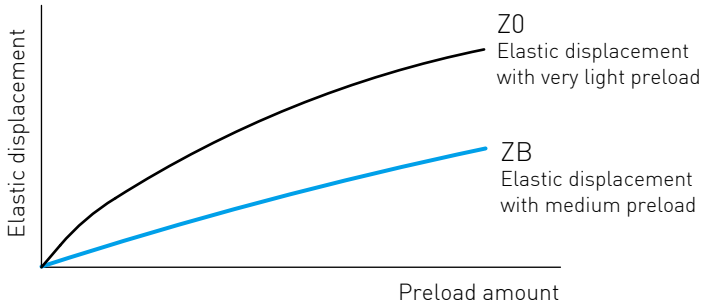

(2) Preload classes

HIWIN offers three standard preloads for various applications and conditions.

Table 2-3-6 **Preload Classes**

Class	Code	Preload	Condition
Very Light Preload	Z0	0~ 0.02C	Certain load direction,low impact, low precision requirement
Light Preload	ZA	0.03C~0.05C	low load and high precision requirement
Medium Preload	ZB	0.06C~ 0.08C	High rigidity requirement, with vibration and impact

Class	Interchangeable Guideway	Non-Interchangeable Guideway
Preload classes	Z0, ZA	Z0, ZA, ZB

Note: The "C" in the preload column denotes basic dynamic load rating.

(3) Stiffness performance

Stiffness depends on preload. The following table shows stiffness value of each size.

Table 2-3-7 **Radial stiffness for WE Series**

Load type	Series / Size	Stiffness (N/μm)		
		Z0	ZA	ZB
Heavy load	WE 17C	130	342	469
	WE 21C	153	368	497
	WE 27C	188	476	651
	WE 35C	285	607	804
	WE 50C	429	758	1042

WE Series

Four-Row Wide Rail

2-3-7 Lubrication

(1) Grease

Grease nipple

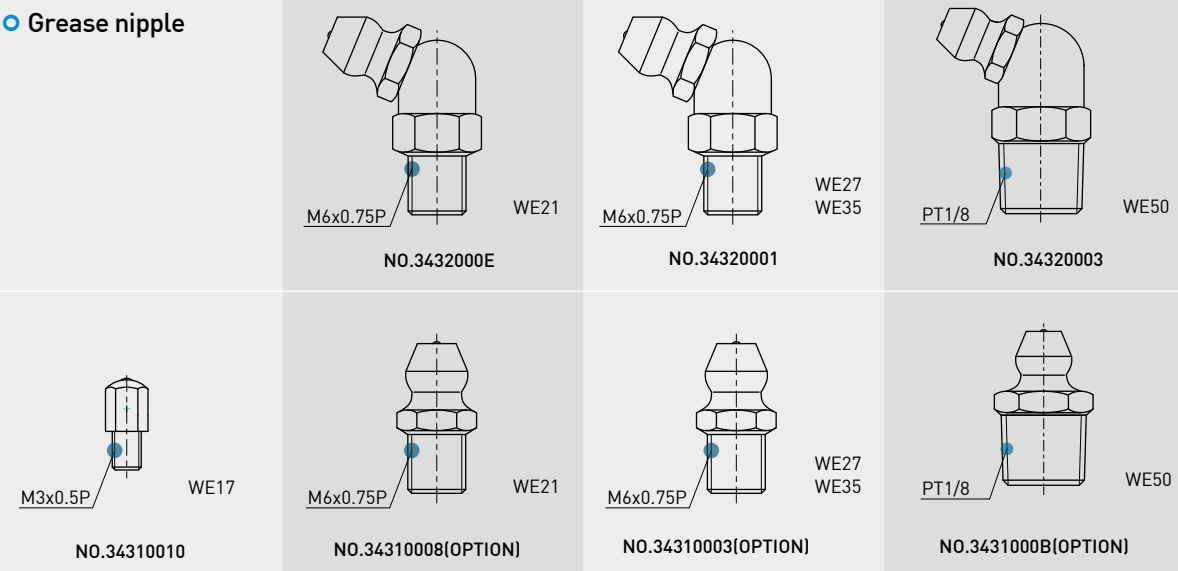

Mounting location

(1) The standard location of the grease fitting is at either end of the block.
(2) Alternatively, the nipple may be mounted on the side of the block. For side installation, contact HIWIN to pre-drill the block at the desired location.
(3) Mounting the nipple on the top of the block requires an adaptor or o-ring depending on different series. HIWIN will pre-drill the holes to accommodate the application's requirement. For non-standard location, please contact HIWIN.
(4) Oil piping joints may also be used at these locations for lubrication. For customers who need to lubricate from the top on a standard block, HIWIN will pre-tap the block and add a recessed o-ring. Please contact HIWIN for more information.

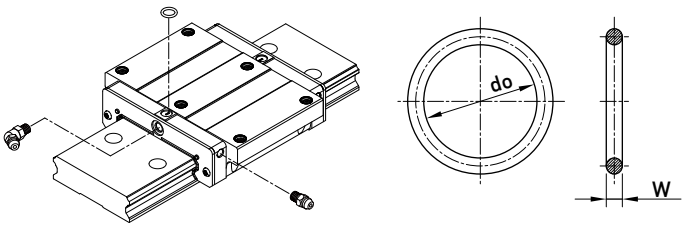

O Ring

Table 2-3-8 **O-Ring size and max. permissible depth for piercing**

Size	O-Ring		Lube hole at top: max. permissible depth for piercing
	do (mm)	W (mm)	T_{max} (mm)
WE 21	2.5 ± 0.15	1.5 ± 0.15	4.2
WE 27	4.5 ± 0.15	1.5 ± 0.15	5.8
WE 35	4.5 ± 0.15	1.5 ± 0.15	7.6
WE 50	4.5 ± 0.15	1.5 ± 0.15	11.8

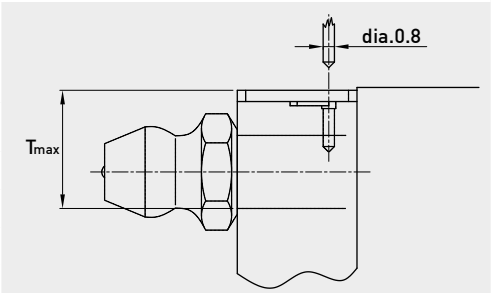

The oil amount for a block filled with grease

Table 2-3-9 **The oil amount for a block filled with grease**

Size	Heavy Load (cm³)	Size	Heavy Load (cm³)
WE 17	1.4	WE 35	9.5
WE 21	2.4	WE 50	20
WE 27	3.6		

Frequency of replenishment

Check the grease every 100 km, or every 3-6 months.

(2) Oil

The recommended viscosity of oil is about 30~150cSt. If you need to use oil-type lubrication, please inform us.

Types of oil piping joint

LF-76

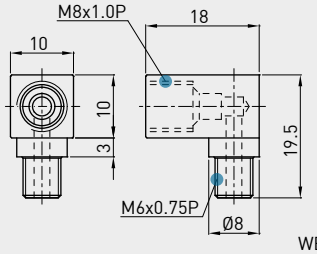

WE27
WE35

NO.970002A1

LF-78-F

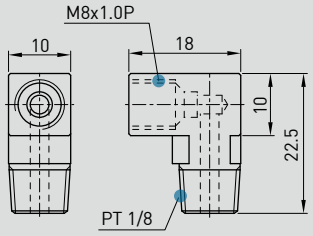

WE50

NO.97003HA1

LF-86

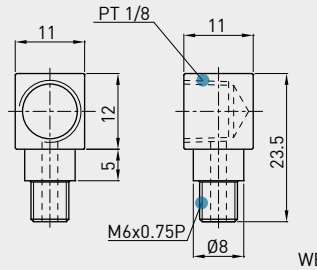

WE27
WE35

NO.970004A1

LF-88-F

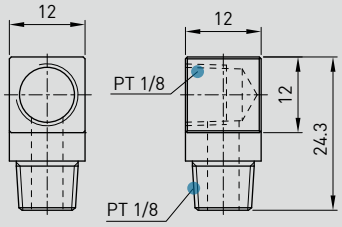

WE50

NO.97003JA1

SF-76

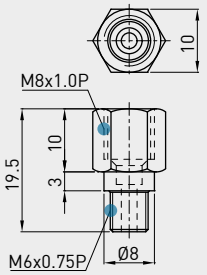

WE27
WE35

NO.970001A1

SF-78

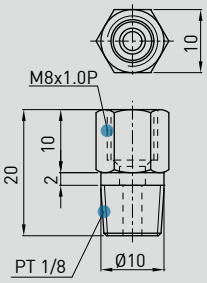

WE50

NO.970005A1

SF-86

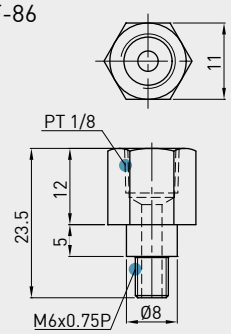

WE27
WE35

NO.970003A1

SF-88

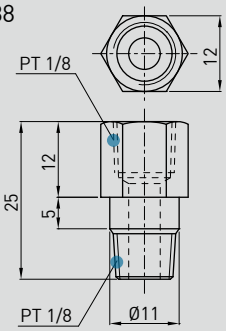

WE50

NO.970007A1

WE Series

Four-Row Wide Rail

Oil feeding rate

Table 2-3-10 **oil feed rate**

Size	feed rate (cm³/hr)	Size	feed rate (cm³/hr)
WE 17	0.15	WE 35	0.3
WE 21	0.2	WE 50	0.4
WE 27	0.2		

2-3-8 Dust Protection Equipment

(1) Codes of equipment

If the following equipment is needed, please indicate the code followed by the model number.

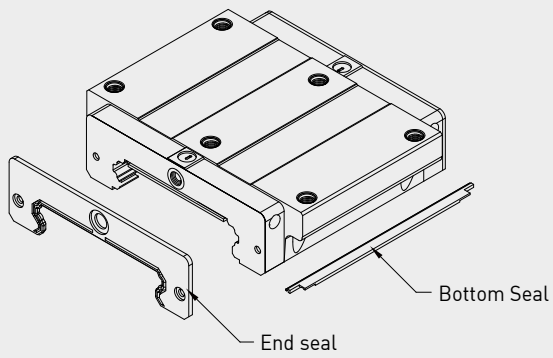

No symbol: Standard Protection (End seal + Bottom seal)

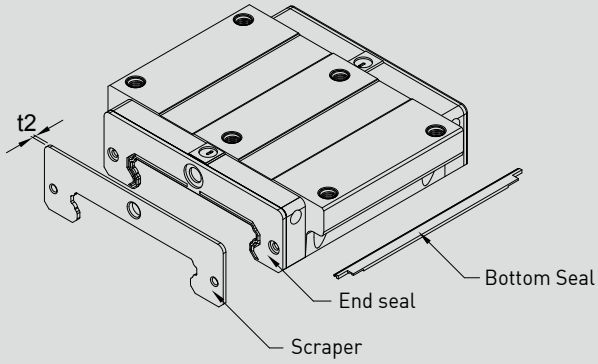

ZZ(End seal + Bottom seal + Scraper)

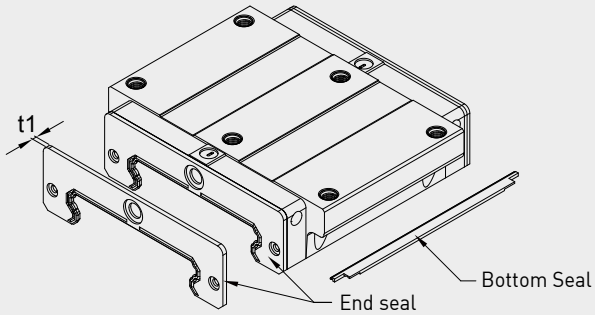

DD (Double seals + Bottom Seal)

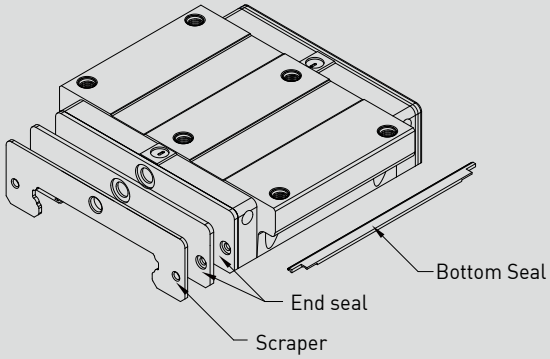

KK (Double seals + Bottom Seal + Scraper)

(2) End seal and bottom seal

Protects against contaminants entering the block. Reduces potential for groove damage resulting in a reduction of life ratings.

(3) Double seals

Removes foreign matter from the rail preventing contaminants from entering the block.

Table 2-3-11 **Dimensions of end seal**

Size	Thickness (t1) (mm)	Size	Thickness (t1) (mm)
WE 17 ES	1.6	WE 35 ES	2
WE 21 ES	2	WE 50 ES	2.5
WE 27 ES	2		

(4) Scraper

Clears larger contaminants, such as weld spatter and metal cuttings, from the rail. Metal scraper protects end seals from excessive damage.

Table 2-3-12 **Dimensions of Scraper**

Size	Thickness (t2) (mm)	Size	Thickness (t2) (mm)
WE 17 SC	1	WE 35 SC	1.5
WE 21 SC	1	WE 50 SC	1
WE 27 SC	1		

(5) Bolt caps for rail mounting holes

Rail mounting hole caps prevent foreign matter from accumulating in the mounting holes. Caps are included with the rail package.

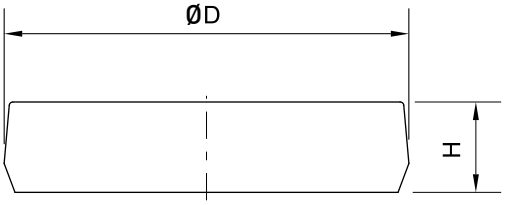

Table 2-3-13 **Dimensions of Bolt Caps for Rail Mounting Holes**

Rail size	Bolt size	Diameter(D) (mm)	Thickness(H) (mm)
WER17R	M4	7.65	1.1
WER21R	M4	7.65	1.1
WER27R	M4	7.65	1.1
WER35R	M6	11.15	2.5
WER50R	M8	14.2	3.5

(6) Dimensions of block equipped with the dustproof parts

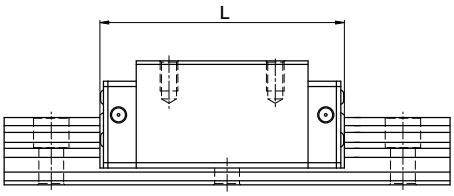

Table 2-3-14 **Overall block length**

unit: mm

Size	Overall block length (L)			
	SS	ZZ	DD	KK
WE17C	50.6 (51.5)	52.6 (55.6)	53.8 (55.0)	55.8 (58.8)
WE21C	59.0 (63.0)	61.0 (67.0)	63.0 (67.0)	65.0 (71.0)
WE27C	72.8 (77.2)	74.8 (80.8)	76.8 (81.2)	78.8 (84.8)
WE35C	102.6 (106.6)	105.6 (111.6)	106.6 (110.6)	109.6 (115.6)
WE50C	140.0 (141.6)	142.0 (146.2)	145.0 (146.6)	147.0 (151.2)

Note : The marking of "( )" denotes the maximum block length with screws, lips of end seals, etc.

WE Series

Four-Row Wide Rail

2-3-9 Friction

The maximum value of resistance per end seal are as shown in the table.

Table 2-3-15 **Seal Resistance**

Size	Resistance N (kgf)	Size	Resistance N (kgf)
WE 17	1.18 (0.12)	WE 35	3.92 (0.4)
WE 21	1.96 (0.2)	WE 50	3.92 (0.4)
WE 27	2.94 (0.3)		

Note:1kgf=9.81N

2-3-10 Mounting Surface Accuracy Tolerance

Because of the circular-arc contact design, the WE linear guideway can withstand surface-error installation and deliver smooth linear motion. When the mounting surface meets the accuracy requirements of the installation, the high accuracy and rigidity of the guideway will be obtained without any difficulty. For faster installation and smoother movement, HIWIN offers a preload with normal clearance because of its ability to absorb higher deviations in mounting surface inaccuracies.

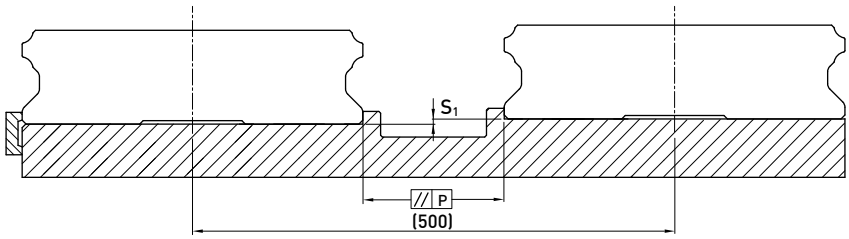

Table 2-3-16 **Max. Parallelism Tolerance (P)** unit: μm

Size	Preload classes			Size	Preload classes		
	Z0	ZA	ZB		Z0	ZA	ZB
WE 17	20	15	9	WE 35	30	22	20
WE 21	25	18	9	WE 50	40	30	27
WE 27	25	20	13				

Table 2-3-17 **Max. Tolerance of Reference Surface Height (S_1)** unit: μm

Size	Preload classes			Size	Preload classes		
	Z0	ZA	ZB		Z0	ZA	ZB
WE 17	65	20	-	WE 35	130	85	70
WE 21	130	85	45	WE 50	170	110	90
WE 27	130	85	45				

Note : Permissible value is proportional to the axial distance.

2-3-11 Cautions for Installation

(1) Shoulder heights and chamfers

Improper shoulder heights and fillets of mounting surfaces will cause a deviation in accuracy and the interference with the rail or block. As long as the recommended shoulder heights and fillets are followed, installation inaccuracies should be eliminated.

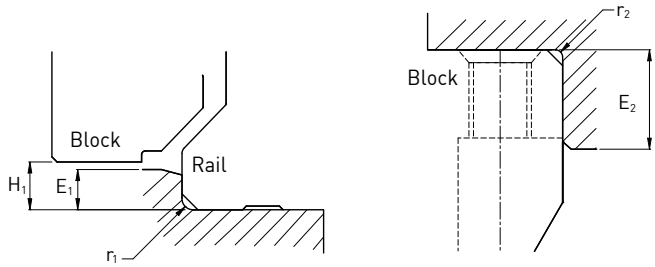

Table 2-3-18 **Shoulder Heights and Chamfers** unit: mm

Size	Max. radius of fillets r_1 (mm)	Max. radius of fillets r_2 (mm)	Shoulder height beside the rail E_1 (mm)	Shoulder height beside the block E_2 (mm)	Clearance under block H_1 (mm)
WE 17	0.4	0.4	2.0	4.0	2.5
WE 21	0.4	0.4	2.5	5.0	3.0
WE 27	0.5	0.4	3.0	7.0	4.0
WE 35	0.5	0.5	3.5	10.0	4.0
WE 50	0.8	0.8	6.0	10.0	7.5

(2) Tightening Torque of Bolts for Installation

Improperly tightened mounting bolts will seriously affect the accuracy of linear guide installations. The following tightening torques for different sizes of bolts are recommended.

Table 2-3-19 **Tightening Torque of Mounting Bolts for Rail Installation**

Size	Bolt size	Torque N-cm(kgf-cm)		
		Iron	Casting	Aluminum
WE 17	M4×0.7P×12L	392 (40)	274 (28)	206 (21)
WE 21	M4×0.7P×12L	392 (40)	274 (28)	206 (21)
WE 27	M4×0.7P×16L	392 (40)	274 (28)	206 (21)
WE 35	M6×1P×20L	1373 (140)	921 (94)	686 (70)
WE 50	M8×1.25P×25L	3041 (310)	2010 (205)	1470 (150)

Note: 1 kgf = 9.81 N

Table 2-3-20 **Tightening Torque of Mounting Bolts for Block Installation**

Size	Bolt size	Torque N-cm(kgf-cm)
		Iron
WE17	M4x0.7P	392 (40)
WE21	M5x0.8P	883 (90)
WE27	M6x1P	1373 (140)
WE35	M8x1.25P	3041 (310)
WE50	M10x1.5P	6760 (689)

Note: 1. 1 kgf = 9.81 N
2. When the mounting bolt holes are located on the middle of flange block, the tightening torque should be decrease to 60%.

WE Series

Four-Row Wide Rail

2-3-12 Standard and Maximum Lengths of Rail

HIWIN offers a number of standard rail lengths. Standard rail lengths feature end mounting hole placements set to predetermined values (E). For non-standard rail lengths, be sure to specify the E-value to be no greater than 1/2 the pitch (P) dimension. An E-value greater than this will result in unstable rail ends.

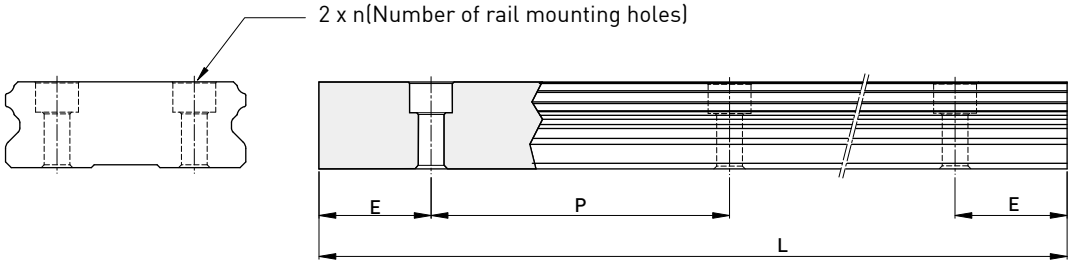

$$L = (n-1) \times P + 2 \times E \qquad \text{Eq.2.3}$$

L : Total length of rail (mm)
n : Number of mounting holes
P : Distance between any two holes (mm)
E : Distance from the center of the last hole to the edge (mm)

Table 2-3-20 **Rail Standard Length and Max. Length**

unit: mm

Item	WER17	WER21	WER27	WER35	WER50
Standard Length L(n)	110 (3)	130 (3)	220 (4)	280 (4)	280 (4)
	190 (5)	230 (5)	280 (5)	440 (6)	440 (6)
	310 (8)	380 (8)	340 (6)	600 (8)	600 (8)
	390 (10)	480 (10)	460 (8)	760 (10)	760 (10)
	470 (12)	580 (12)	640 (11)	1000 (13)	1,000 (13)
	550 (14)	780 (16)	820 (14)	1,640 (21)	1,640 (21)
	-	-	1,000 (17)	2,040 (26)	2,040 (26)
	-	-	1,240 (21)	2,520 (32)	2,520 (32)
	-	-	1,600 (27)	3,000 (38)	3,000 (38)
Pitch (P)	40	50	60	80	80
Distance to End (E_s)	15	15	20	20	20
Max. Standard Length	3,990 (100)	3,980 (80)	4,000 (67)	3,960 (50)	3,960 (50)
Max. Length	4,000	4,000	4,000	4,000	4,000

Note : 1. Tolerance of E value for standard rail is 0.5~-0.5 mm. Tolerance of E value for jointed rail is 0~-0.3 mm.
2. Maximum standard length means the max. rail length with standard E value on both sides.
3. If different E value is needed, please contact HIWIN.

2-3-13 Dimensions for HIWIN WE Series

(1) WEH-CA

WEH17CA

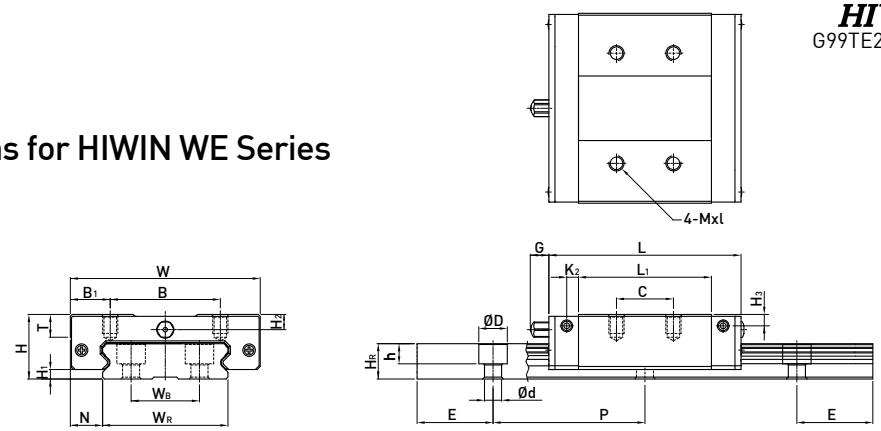

WEH21CA

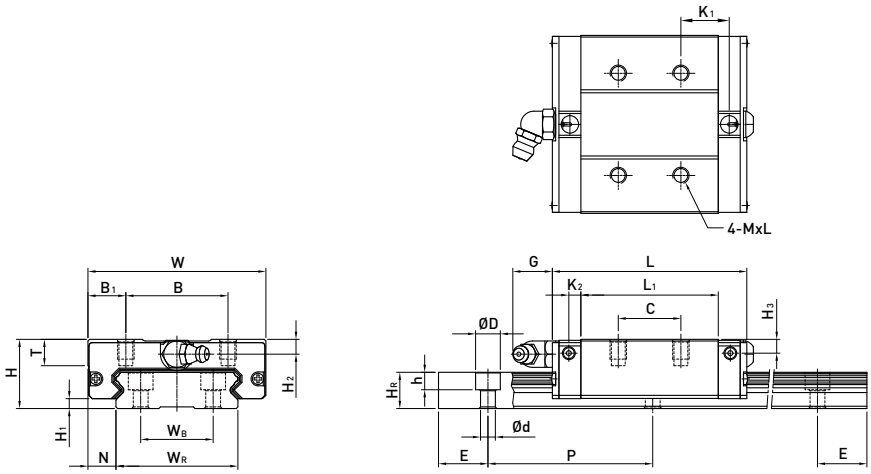

WEH27CA
WEH35CA
WEH50CA

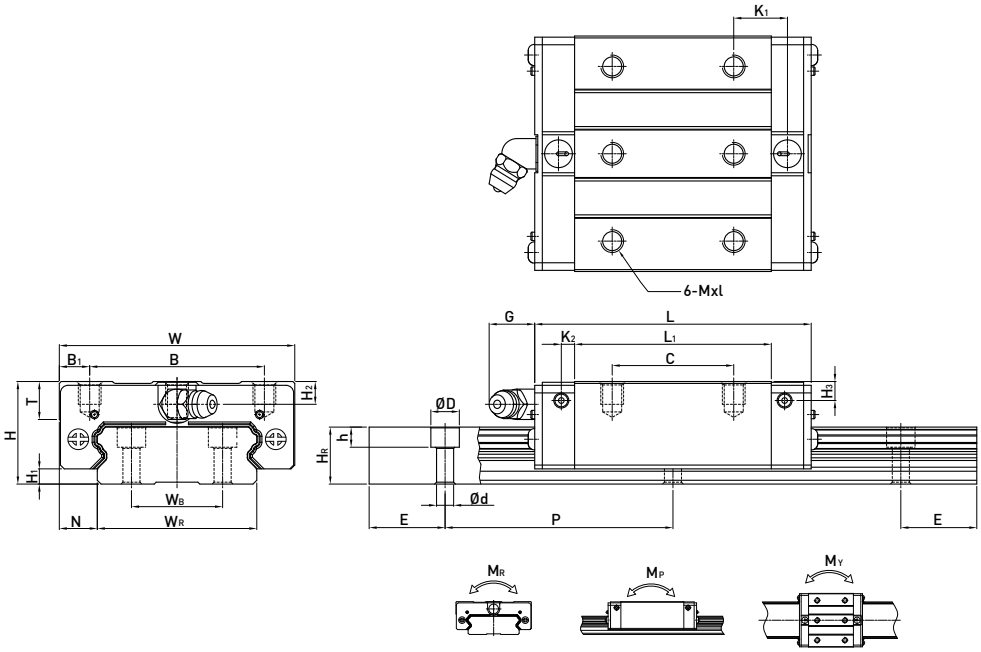

Model No.	Dimensions of Assembly (mm)			Dimensions of Block (mm)													Dimensions of Rail (mm)								Mounting Bolt for Rail	Basic Dynamic Load Rating	Basic Static Load Rating	Static Rated Moment			Weight	
	H	H_1	N	W	B	B_1	C	L_1	L	K_1	K_2	G	Mxl	T	H_2	H_3	W_R	W_B	H_R	D	h	d	P	E	(mm)	C(kN)	C_0 (kN)	M_R kN-m	M_P kN-m	M_Y kN-m	Block kg	Rail kg/m
WEH17CA	17	2.5	8.5	50	29	10.5	15	35	50.6	-	3.1	4.9	M4x5	6	4	3	33	18	9.3	7.5	5.3	4.5	40	15	M4x12	5.23	9.64	0.15	0.062	0.062	0.12	2.2
WEH21CA	21	3	8.5	54	31	11.5	19	41.7	59	14.68	3.65	12	M5x6	8	4.5	4.2	37	22	11	7.5	5.3	4.5	50	15	M4x12	7.21	13.7	0.23	0.10	0.10	0.20	3.0
WEH27CA	27	4	10	62	46	8	32	51.8	72.8	14.15	3.5	12	M6x6	10	6	5	42	24	15	7.5	5.3	4.5	60	20	M4x16	12.4	21.6	0.42	0.17	0.17	0.35	4.7
WEH35CA	35	4	15.5	100	76	12	50	77.6	102.6	18.35	5.25	12	M8x8	13	8	6.5	69	40	19	11	9	7	80	20	M6x20	29.8	49.4	1.48	0.67	0.67	1.1	9.7
WEH50CA	50	7.5	20	130	100	15	65	112	140	28.05	6	12.9	M10x15	19.5	12	10.5	90	60	24	14	12	9	80	20	M8x25	61.52	97.1	4.03	1.96	1.96	3.16	15.5

Note : 1 kgf = 9.81 N

WE Series

Four-Row Wide Rail

(2) WEW-CC

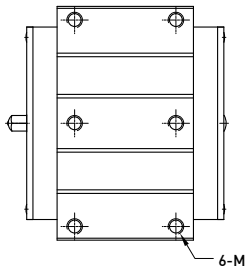

WEW17CC

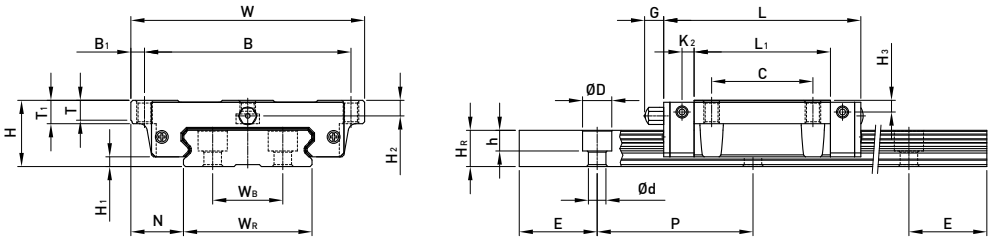

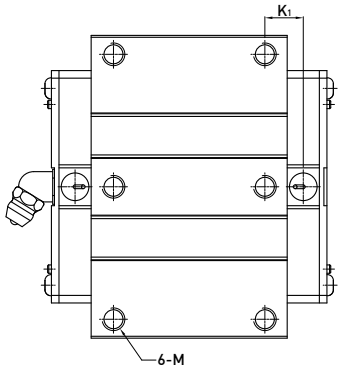

WEW27CC
WEW21CC
WEW35CC
WEW50CC

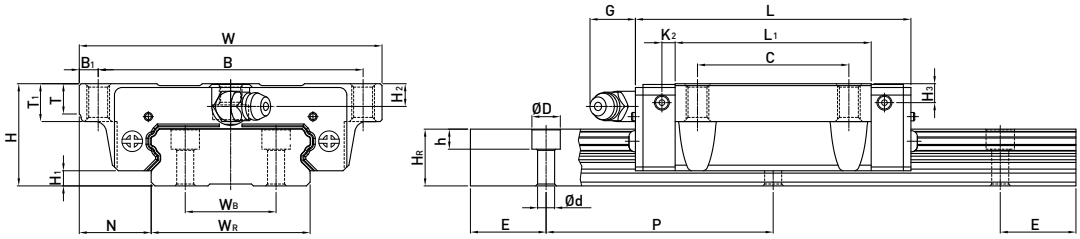

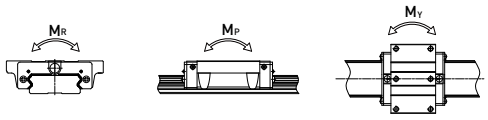

Model No.	Dimensions of Assembly (mm)			Dimensions of Block (mm)														Dimensions of Rail (mm)								Mounting Bolt for Rail	Basic Dynamic Load Rating	Basic Static Load Rating	Static Rated Moment			Weight	
	H	H_1	N	W	B	B_1	C	L_1	L	K_1	K_2	G	M	T	T_1	H_2	H_3	W_R	W_B	H_R	D	h	d	P	E	(mm)	C(kN)	C_0 (kN)	M_R kN-m	M_P kN-m	M_Y kN-m	Block kg	Rail kg/m
WEW17CC	17	2.5	13.5	60	53	3.5	26	35	50.6	-	3.1	4.9	M4	5.1	6	4	3	33	18	9.3	7.5	5.3	4.5	40	15	M4x12	5.23	9.64	0.15	0.062	0.062	0.13	2.2
WEW21CC	21	3	15.5	68	60	4	29	41.7	59	9.68	3.65	12	M5	7.3	8	4.5	4.2	37	22	11	7.5	5.3	4.5	50	15	M4x12	7.21	13.7	0.23	0.10	0.10	0.23	3.0
WEW27CC	27	4	19	80	70	5	40	51.8	72.8	10.15	3.5	12	M6	8	10	6	5	42	24	15	7.5	5.3	4.5	60	20	M4x16	12.4	21.6	0.42	0.17	0.17	0.43	4.7
WEW35CC	35	4	25.5	120	107	6.5	60	77.6	102.6	13.35	5.25	12	M8	11.2	14	8	6.5	69	40	19	11	9	7	80	20	M6x20	29.8	49.4	1.48	0.67	0.67	1.26	9.7
WEW50CC	50	7.5	36	162	144	9	80	112	140	20.55	6	12.9	M10	14	18	12	10.5	90	60	24	14	12	9	80	20	M8x25	61.52	97.1	4.03	1.96	1.96	3.71	15.5

Note : 1 kgf = 9.81 N

(3) Dimensions for WER-T (rail mounting from bottom)

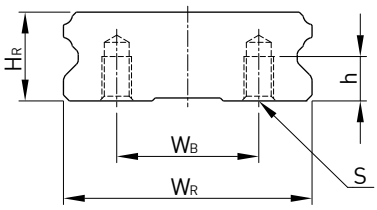

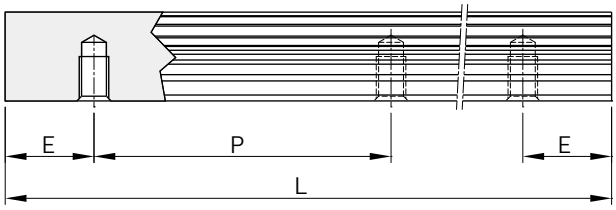

Model No.	Dimensions of Rail (mm)							Weight
	W_R	W_B	H_R	S	h	P	E	(kg/m)
WER17T	33	18	9.3	M4 x 0.7P	6	40	15	2.3
WER21T	37	22	11	M4 x 0.7P	7	50	15	3.1
WER27T	42	24	15	M5 x 0.8P	7.5	60	20	4.8
WER35T	69	40	19	M6 x 1P	12	80	20	9.9
WER50T	90	60	24	M8 x 1.25P	15	80	20	15.9