HG Series

Heavy Load Ball Type

2-1 HG Series - Heavy Load Ball Type Linear Guideway

HG series linear guideways are designed with load capacity and rigidity higher than other similar products with circular-arc groove and structure optimization. It features equal load ratings in the radial, reverse radial and lateral directions, and self-aligning to absorb installation-error. Thus, HIWIN HG series linear guideways can achieve a long life with high speed, high accuracy and smooth linear motion.

2-1-1 Features of HG Series

(1) Self-aligning capability

By design, the circular-arc groove has contact points at 45 degrees. HG series can absorb most installation errors due to surface irregularities and provide smooth linear motion through the elastic deformation of rolling elements and the shift of contact points. Self-aligning capability, high accuracy and smooth operation can be obtained with an easy installation.

(2) Interchangeability

Because of precision dimensional control, the dimensional tolerance of HG series can be kept in a reasonable range, which means that any blocks and any rails in a specific series can be used together while maintaining dimensional tolerance. And a retainer is added to prevent the balls from falling out when the blocks are removed from the rail.

(3) High rigidity in all four directions

Because of the four-row design, the HG series linear guideway has equal load ratings in the radial, reverse radial and lateral directions. Furthermore, the circular-arc groove provides a wide-contact width between the balls and the groove raceway allowing large permissible loads and high rigidity.

2-1-2 Construction of HG Series

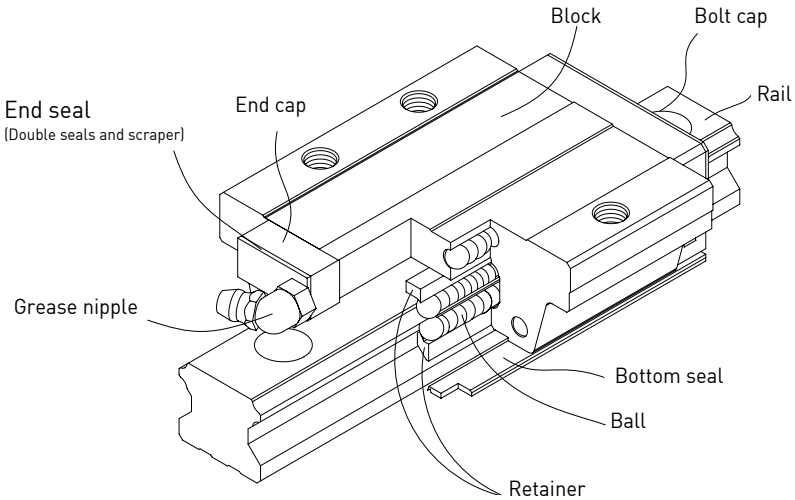

- Rolling circulation system: Block, Rail, End Cap and Retainer
- Lubrication system: Grease Nipple and Piping Joint
- Dust protection system: End seal, Bottom Seal, Bolt Cap, Double Seals and Scraper

2-1-3 Model Number of HG Series

HG series guideways can be classified into non-interchangeable and interchangeable types. The sizes are identical. The only difference between the two types is that the interchangeable type of blocks and rails can be freely exchanged, and their accuracy can reach up to P class. The model number of HG series contains the size, type, accuracy class, preload class, etc..

(1) Non-interchangeable type

HG W 25 C A E 2 R 1600 E ZA P M II + DD/E2+RC

- HG Series
- Block Type
  - W : Flange Type
  - H : Square Type
  - L : Square Type (Low)[3]
- Model size
  - 15, 20, 25, 30, 35, 45, 55, 65
- Load Type
  - C : Heavy Load
  - H : Super Heavy Load
- Block Mounting
  - A : Mounting From Top
  - B : Bottom
  - C : Top or Bottom
- E: Special Block
  - None: Standard Block
- No. of Blocks per Rail
- Rail Mounting Type
  - R : Mounting From Top, T : Bottom
- Rail Length (mm)
- E: Special Rail
  - None: Standard Rail
- Preload Code: Z0, ZA, ZB
- Precision Code:
  - C, H, P, SP, UP
- Material[4]: No symbol, M
- No.of rails per axis set[1]
- Dust Protection[2]
  - E2: Self-Lubricant
  - SE: Metallic End Cap
- RC:Reinforced Cap

Note: 1. The roman numerals express a matched set of rails.
2. No symbol indicates standard protection (end seal and bottom seal).
ZZ : End seal, bottom seal and scraper
KK: Double seals, bottom seal and scraper.
DD: Double seals and bottom seal
3. Block type HGL is the low profile design of HGH (square type), the assembled height is same as HGW (flange type) in same size.
4. No symbol: Carbon Steel / M: Stainless Steel
5. The stainless steel is available for HG15C、HG20C、HG25C.

(2) Interchangeable type

Model Number of HG Block

HG W 25 C A E ZA P M + DD/E2

- HG Series
- Block Type
  - W : Flange Type
  - H : Square Type
  - L : Square Type[3]
- Model size
  - 15, 20, 25, 30, 35, 45, 55, 65
- Load Type
  - C : Heavy Load
  - H : Super Heavy Load
- Block Mounting Type
  - A : Mounting From Top
  - B : Bottom, C : Top or Bottom
- E: Special Block
  - None: Standard Block
- Preload Code : Z0, ZA
- Precision Code : C, H, P
- Material[4]: No symbol, M
- Dust Protection[2]
  - E2: Self-Lubricant
  - SE: Metallic End Cap

Model Number of HG Rail

HG R 25 R 1600 E P M + RC

- HG Series
- Interchangeable Rail
- Model size
  - 15, 20, 25, 30, 35, 45, 55, 65
- Rail Mounting Type
  - R : Mounting From Top
  - T : Bottom
- Rail Length (mm)
- E: Special Rail,
  - None: Standard Rail
- Precision Code : C, H, P
- Material[4]: No symbol, M
- RC:Reinforced Cap

HG Series

Heavy Load Ball Type

2-1-4 Types

(1) Block types

There're two types of blocks:flange and square. The flange type is suitable for heavy moment load application because of the lower assembly height and wider mounting surface.

Table 2-1-1 **Block Types**

Type	Model	Shape	Height (mm)	Rail Length (mm)	Main Application
Square	HGH-CA HGH-HA	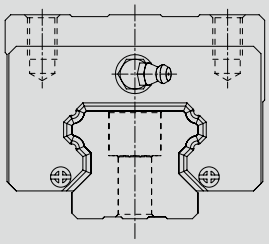	28 ↓ 90	100 ↓ 4000	○ Machine Centers ○ NC Lathes ○ Grinding Machines ○ Precision Machining Machines ○ Heavy Cutting Machines ○ Automation Devices ○ Transportation Equipment ○ Measuring Equipment ○ Devices Requiring High Positional Accuracy
	HGL-CA HGL-HA	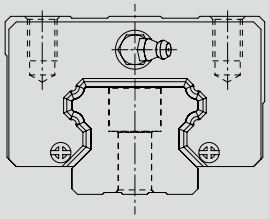	24 ↓ 70	100 ↓ 4000	
Flange	HGW-CA HGW-HA	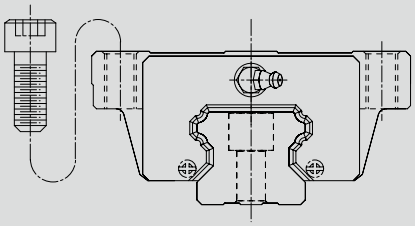	24 ↓ 90	100 ↓ 4000	
	HGW-CB HGW-HB	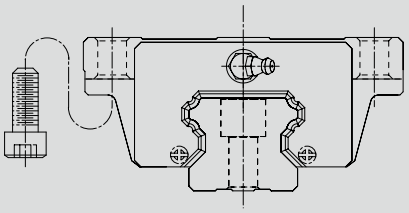	24 ↓ 90	100 ↓ 4000	
	HGW-CC HGW-HC	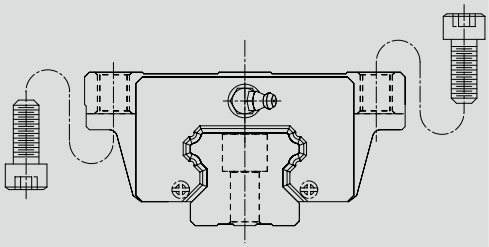	24 ↓ 90	100 ↓ 4000	

(2) Rail types

Besides the standard top mounting type, the bottom mounting type is also available.

Table 2-1-2 **Rail Types**

Mounting from Top	Mounting from bottom
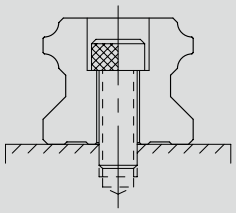	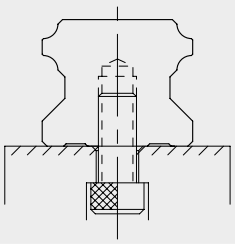

2-1-5 Accuracy Classes

The accuracy of HG series can be classified into normal (C), high (H), precision (P), super precision (SP), ultra precision (UP), five classes. Please choose the class by referring the accuracy of applied equipment.

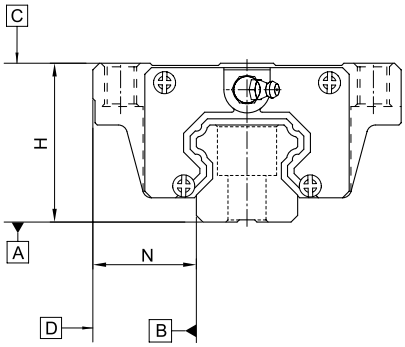

(1) Accuracy of non-interchangeable guideways

Table 2-1-3 **Accuracy Standards** Unit: mm

Item	HG - 15, 20				
Accuracy Classes	Normal (C)	High (H)	Precision (P)	Super Precision (SP)	Ultra Precision (UP)
Dimensional tolerance of height H	± 0.1	± 0.03	0 - 0.03	0 - 0.015	0 - 0.008
Dimensional tolerance of width N	± 0.1	± 0.03	0 - 0.03	0 - 0.015	0 - 0.008
Variation of height H	0.02	0.01	0.006	0.004	0.003
Variation of width N	0.02	0.01	0.006	0.004	0.003
Running parallelism of block surface C to surface A	See Table 2-1-11				
Running parallelism of block surface D to surface B	See Table 2-1-11				

Table 2-1-4 **Accuracy Standards** Unit: mm

Item	HG - 25, 30, 35				
Accuracy Classes	Normal (C)	High (H)	Precision (P)	Super Precision (SP)	Ultra Precision (UP)
Dimensional tolerance of height H	± 0.1	± 0.04	0 - 0.04	0 - 0.02	0 - 0.01
Dimensional tolerance of width N	± 0.1	± 0.04	0 - 0.04	0 - 0.02	0 - 0.01
Variation of height H	0.02	0.015	0.007	0.005	0.003
Variation of width N	0.03	0.015	0.007	0.005	0.003
Running parallelism of block surface C to surface A	See Table 2-1-11				
Running parallelism of block surface D to surface B	See Table 2-1-11				

HG Series

Heavy Load Ball Type

Table 2-1-5 **Accuracy Standards** Unit: mm

Item	HG - 45, 55				
Accuracy Classes	Normal (C)	High (H)	Precision (P)	Super Precision (SP)	Ultra Precision (UP)
Dimensional tolerance of height H	± 0.1	± 0.05	0 - 0.05	0 - 0.03	0 - 0.02
Dimensional tolerance of width N	± 0.1	± 0.05	0 - 0.05	0 - 0.03	0 - 0.02
Variation of height H	0.03	0.015	0.007	0.005	0.003
Variation of width N	0.03	0.02	0.01	0.007	0.005
Running parallelism of block surface C to surface A	See Table 2-1-11				
Running parallelism of block surface D to surface B	See Table 2-1-11				

Table 2-1-6 **Accuracy Standards** Unit: mm

Item	HG - 65				
Accuracy Classes	Normal (C)	High (H)	Precision (P)	Super Precision (SP)	Ultra Precision (UP)
Dimensional tolerance of height H	± 0.1	± 0.07	0 - 0.07	0 - 0.05	0 - 0.03
Dimensional tolerance of width N	± 0.1	± 0.07	0 - 0.07	0 - 0.05	0 - 0.03
Variation of height H	0.03	0.02	0.01	0.007	0.005
Variation of width N	0.03	0.025	0.015	0.01	0.007
Running parallelism of block surface C to surface A	See Table 2-1-11				
Running parallelism of block surface D to surface B	See Table 2-1-11				

(2) Accuracy of interchangeable guideways

Table 2-1-7 **Accuracy Standards** Unit: mm

Item	HG - 15, 20		
Accuracy Classes	Normal (C)	High (H)	Precision (P)
Dimensional tolerance of height H	± 0.1	± 0.03	± 0.015
Dimensional tolerance of width N	± 0.1	± 0.03	± 0.015
Variation of height H	0.02	0.01	0.006
Variation of width N	0.02	0.01	0.006
Running parallelism of block surface C to surface A	See Table 2-1-11		
Running parallelism of block surface D to surface B	See Table 2-1-11		

Table 2-1-8 **Accuracy Standards** Unit: mm

Item	HG - 25, 30, 35		
Accuracy Classes	Normal (C)	High (H)	Precision (P)
Dimensional tolerance of height H	± 0.1	± 0.04	± 0.02
Dimensional tolerance of width N	± 0.1	± 0.04	± 0.02
Variation of height H	0.02	0.015	0.007
Variation of width N	0.03	0.015	0.007
Running parallelism of block surface C to surface A	See Table 2-1-11		
Running parallelism of block surface D to surface B	See Table 2-1-11		

Table 2-1-9 **Accuracy Standards** Unit: mm

Item	HG - 45, 55		
Accuracy Classes	Normal (C)	High (H)	Precision (P)
Dimensional tolerance of height H	± 0.1	± 0.05	± 0.025
Dimensional tolerance of width N	± 0.1	± 0.05	± 0.025
Variation of height H	0.03	0.015	0.007
Variation of width N	0.03	0.02	0.01
Running parallelism of block surface C to surface A	See Table 2-1-11		
Running parallelism of block surface D to surface B	See Table 2-1-11		

Table 2-1-10 **Accuracy Standards** Unit: mm

Item	HG - 65		
Accuracy Classes	Normal (C)	High (H)	Precision (P)
Dimensional tolerance of height H	± 0.1	± 0.07	± 0.035
Dimensional tolerance of width N	± 0.1	± 0.07	± 0.035
Variation of height H	0.03	0.02	0.01
Variation of width N	0.03	0.025	0.015
Running parallelism of block surface C to surface A	See Table 2-1-11		
Running parallelism of block surface D to surface B	See Table 2-1-11		

(3) Accuracy of running parallelism

Table 2-1-11 **Accuracy of Running Parallelism**

Rail Length (mm)	Accuracy (μm)				
	C	H	P	SP	UP
~ 100	12	7	3	2	2
100 ~ 200	14	9	4	2	2
200 ~ 300	15	10	5	3	2
300 ~ 500	17	12	6	3	2
500 ~ 700	20	13	7	4	2
700 ~ 900	22	15	8	5	3
900 ~ 1,100	24	16	9	6	3
1,100 ~ 1,500	26	18	11	7	4
1,500 ~ 1,900	28	20	13	8	4
1,900 ~ 2,500	31	22	15	10	5
2,500 ~ 3,100	33	25	18	11	6
3,100 ~ 3,600	36	27	20	14	7
3,600 ~ 4,000	37	28	21	15	7

HG Series

Heavy Load Ball Type

2-1-6 Preload

(1) Definition

A preload can be applied to each guideway. Oversized balls are used. Generally, a linear motion guideway has a negative clearance between groove and balls in order to improve stiffness and maintain high precision. The figure shows the load is multiplied by the preload, the rigidity is doubled and the deflection is reduced by one half. The preload no larger than ZA would be recommended for the model size under HG20 to avoid an over-preload affecting the guideway's life.

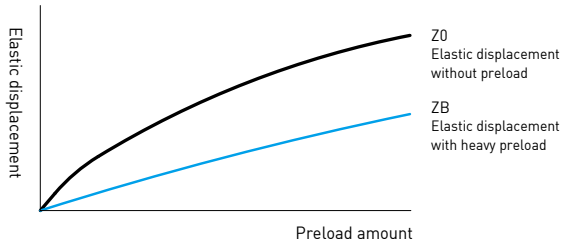

(2) Preload classes

HIWIN offers three classes of standard preload for various applications and conditions.

Table 2-1-12 **Preload Classes**

Class	Code	Preload	Condition	Examples of Application
Light Preload	Z0	0~ 0.02C	Certain load direction,low impact, low precision required	Transportation devices, auto-packing machines, X-Y axis for general industrial machines, welding machines, welders
Medium Preload	ZA	0.05C~0.07C	High precision required	Machining centers, Z axis for general industrial, machines, EDM, NC lathes, Precision X-Y tables, measuring equipment
Heavy Preload	ZB	0.10C~ 0.12C	High rigidity required, with vibration and impact	Machining centers, grinding machines, NC lathes, horizontal and vertical milling machines, Z axis of machine tools, Heavy cutting machines

Class	Interchangeable Guideway	Non-Interchangeable Guideway
Preload classes	Z0, ZA	Z0, ZA, ZB

Note: The "C" in the preload column denotes basic dynamic load rating.

(3) Stiffness performance

Stiffness depends on preload. The following table shows stiffness value of each size.

Table 2-1-13 **Radial stiffness for HG Series**

Load type	Series / Size	Stiffness (N/μm)		
		Z0	ZA	ZB
Heavy load	HG 15C	196	365	483
	HG 20C	232	460	678
	HG 25C	292	539	705
	HG 30C	354	618	823
	HG 35C	395	642	865
	HG 45C	505	738	980
	HG 55C	609	828	1092
	HG 65C	716	918	1201
Super heavy load	HG 20H	300	611	824
	HG 25H	378	715	935
	HG 30H	453	820	1093
	HG 35H	509	855	1150
	HG 45H	649	970	1298
	HG 55H	789	1085	1445
	HG 65H	946	1221	1599

2-1-7 Lubrication

(1) Grease

Grease nipple

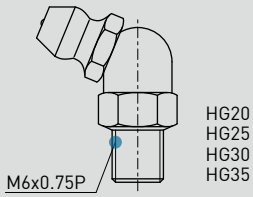

NO.34320001

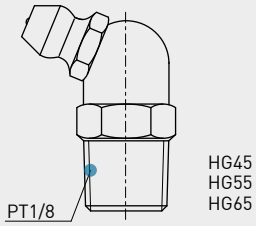

NO.34320003

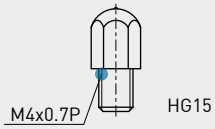

N0.34310002

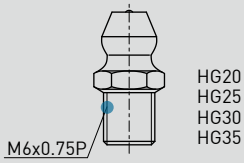

NO. 34310003(OPTION)

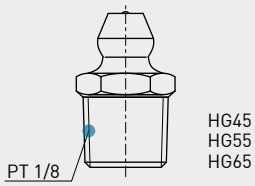

N0.3431000B(OPTION)

Mounting location

(1) The standard location of the grease fitting is at either end of the block.
(2) Alternatively, the nipple may be mounted on the side of the block. For side installation, contact HIWIN to pre-drill the block at the desired location.
(3) Mounting the nipple on the top of the block requires an adaptor or o-ring depending on different series. HIWIN will pre-drill the holes to accommodate the application's requirement. For non-standard location, please contact HIWIN.
(4) Oil piping joints may also be used at these locations for lubrication. For customers who need to lubricate from the top on a standard block, HIWIN will pre-tap the block and add a recessed o-ring. Please contact HIWIN for more information.

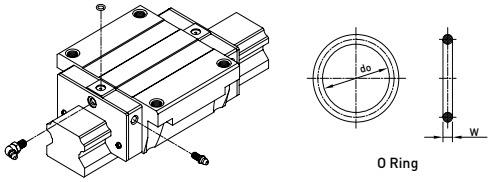

Table 2-1-14 **O-Ring size and max. permissible depth for piercing**

Size	O-Ring		Lube hole at top: max. permissible depth for piercing
	do (mm)	W (mm)	T_{max} (mm)
HG15	2.5±0.15	1.5±0.15	3.75
HG20	4.5±0.15	1.5±0.15	5.7
HG25	4.5±0.15	1.5±0.15	5.8
HG30	4.5±0.15	1.5±0.15	6.3
HG35	4.5±0.15	1.5±0.15	8.8
HG45	4.5±0.15	1.5±0.15	8.2
HG55	4.5±0.15	1.5±0.15	11.8
HG65	4.5±0.15	1.5±0.15	10.8

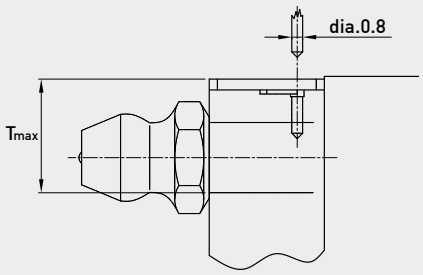

The lubricant amount for a block filled with grease

Table 2-1-15 **The lubricant Amount for a Block Filled with Grease**

Size	Heavy load (cm^3)	Super heavy load (cm^3)	Size	Heavy load (cm^3)	Super heavy load (cm^3)
HG15	1	-	HG35	10	12
HG20	2	3	HG45	17	21
HG25	5	6	HG55	26	33
HG30	7	8	HG65	50	61

Frequency of replenishment

Check the grease every 100 km, or every 3-6 months.

HG Series

Heavy Load Ball Type

(2) Oil

The recommended viscosity of oil is about 30~150cSt. If customers need to use oil-type lubrication, please inform us.

Types of oil piping joint

LF-64

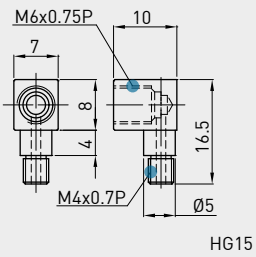

NO.97000EA1

LF-76

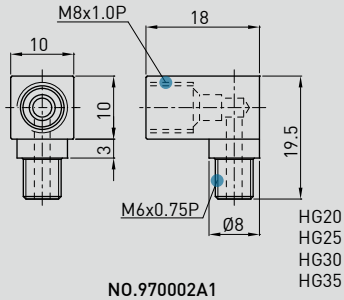

NO.970002A1

LF-78-F

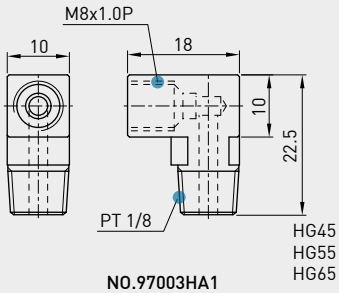

NO.97003HA1

SF-64

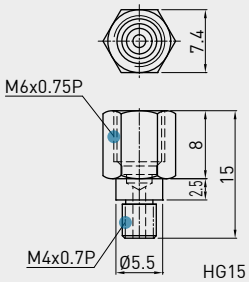

NO.97001TA1

LF-86

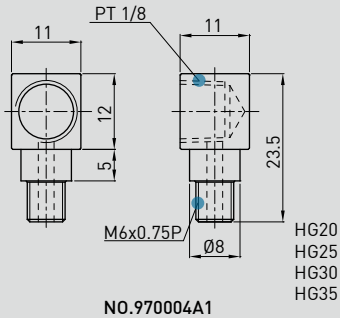

NO.970004A1

LF-88-F

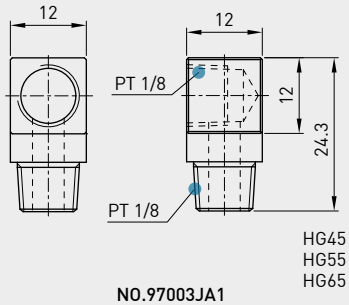

NO.97003JA1

SF-76

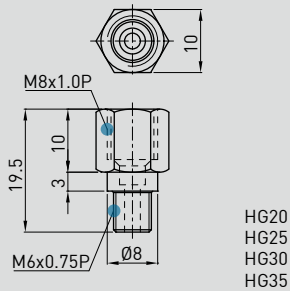

NO.970001A1

SF-78

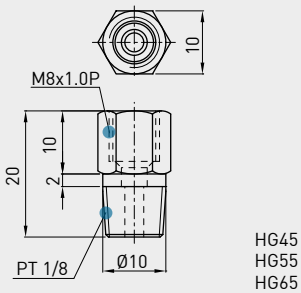

NO.970005A1

SF-86

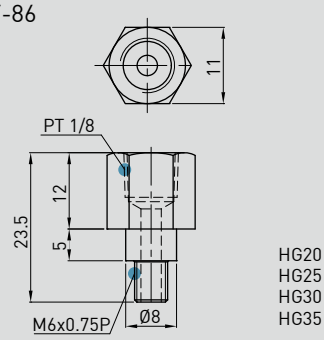

NO.970003A1

SF-88

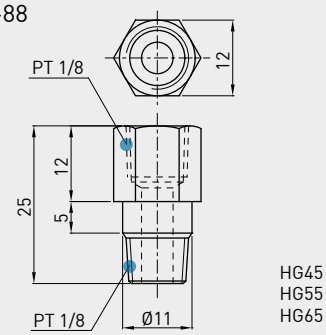

NO.970007A1

Oil refilling rate

Table 2-1-16

Size	Refilling rate (cm^3/hr)	Size	Refilling rate (cm^3/hr)
HG15	0.2	HG35	0.3
HG20	0.2	HG45	0.4
HG25	0.3	HG55	0.5
HG30	0.3	HG65	0.6

2-1-8 Dust Proof Accessories

(1) Codes of standard dust proof accessories

If the following accessories are needed, please add the code followed by the model number.

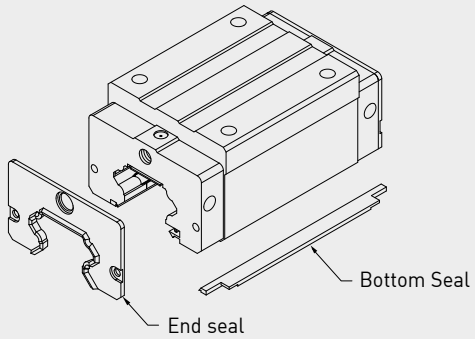

No symbol: Standard Protection (End seal + Bottom Seal)

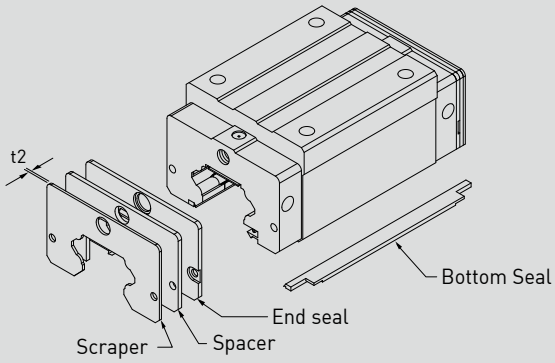

ZZ (End seal + Bottom Seal + Scraper)

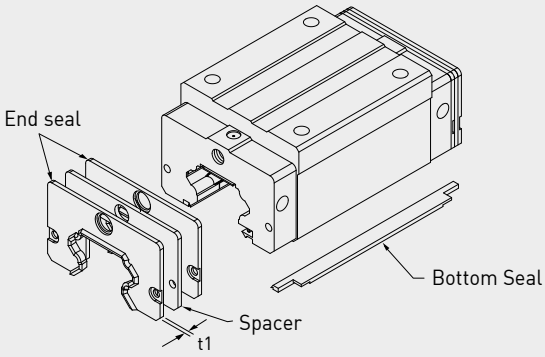

DD (Double seals + Bottom Seal)

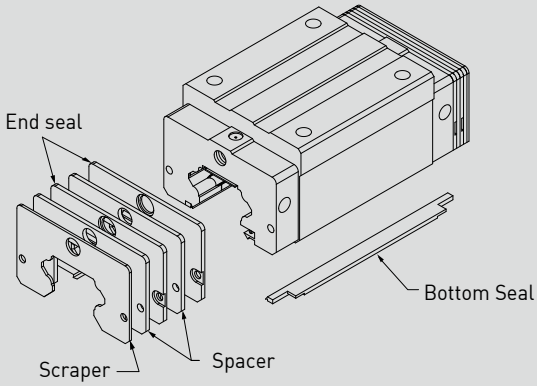

KK (Double seals + Bottom Seal + Scraper)

Note: HG20/25/65 are without spacer.

HG Series

Heavy Load Ball Type

(2) Codes of high-dust proof accessories

HIWIN develops many kinds of dust proof accessories for different application and working environment to avoid dust or debris. If the following accessories are needed, please add the code followed by the model number.

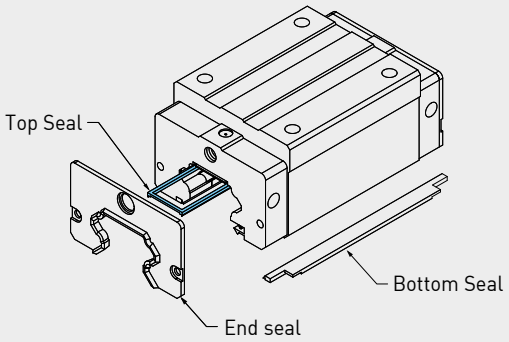

SH {End Seal (High-Dust Proof)
+ Bottom Seal (High Dust Proof) + Top Seal}

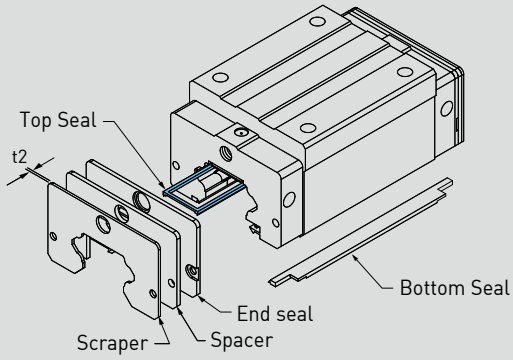

ZH {End Seal (High-Dust Proof)
+Bottom Seal (High Dust Proof) + Top Seal + Spacer}

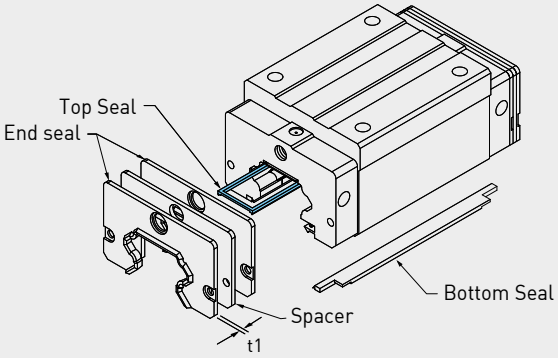

DH {Double End Seal (High Dust Proof)
+Bottom Seal (High Dust Proof) + Top Seal}

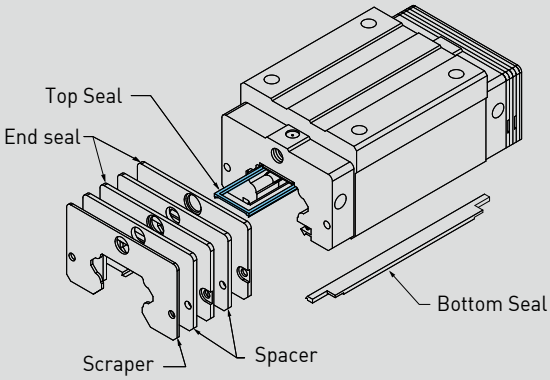

KH {Double End Seal (High Dust Proof)
+ Bottom Seal (High Dust Proof) +Top Seal +Scraper}

Note: 1. The available size for high dust proof accessories are HG20(C/H), 25(C/H), 30(C/H), 35(C/H) and 45C.
2. The value of fricton force will increase 0.6~1.2 kgf.
3. HG20/25 are without spacer.
4. If higher dust proof accessories is needed , please contact HIWIN.

(3) Codes of ultra-high dust proof accessories

HIWIN has developed high dust proof accessories which is used for environment that is full of dust and particle, such as wood working machinery and glass/stone machining equipment. These accessories show high performance of dust proof. If accessories are needed, please add the code followed by the model number.

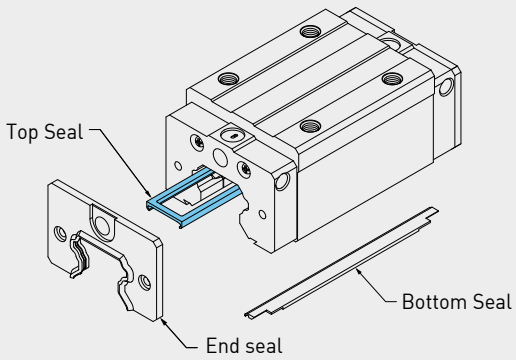

SW (End Seal(Ultra-high dustproof) +Bottom Seal(Ultra-high dustproof) +Top Seal)

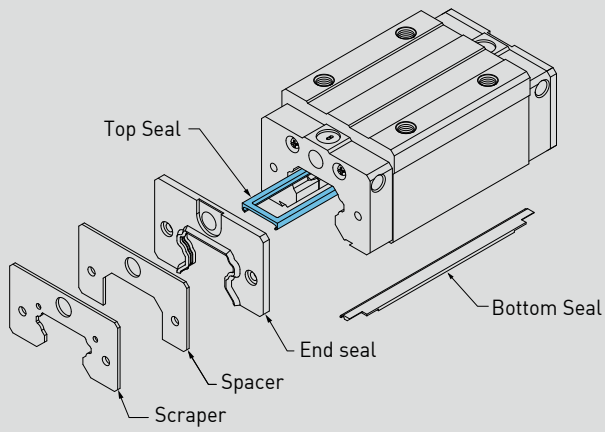

ZW (End Seal(Ultra-high dustproof) +Bottom Seal(Ultra-high dustproof) +Top Seal+Scraper)

Note : 1. The available size for high dust proof accessories are HG15C, HG20(C/H), HG25(C/H), HG30(C/H), HG35(C/H), HG45(C/H).
2. The value of fricton force will increase 1.5~4.0 kgf.
3. MGN5 is only supplied with End Seal (Ultra-high dustproof)

(4) Fuction of dust proof accessories

End seal and bottom seal

To prevent life reduction caused by iron chips or dust entering the block.

Double seals

Enhances the wiping effect, foreign matter can be completely wiped off.

Table 2-1-17 **Dimensions of end seal**

Size	Thickness (t1) (mm)	Size	Thickness (t1) (mm)
HG15 ES	3	HG35 ES	3.2
HG20 ES	3.5	HG45 ES	4.5
HG25 ES	3.5	HG55 ES	4.5
HG30 ES	3.2	HG65 ES	6

Scraper

The scraper removes high-temperature iron chips and larger foreign objects.

Table 2-1-18 **Dimensions of scraper**

Size	Thickness (t2) (mm)	Size	Thickness (t2) (mm)
HG15 SC	1.5	HG35 SC	1.5
HG20 SC	1.5	HG45 SC	1.5
HG25 SC	1.5	HG55 SC	1.5
HG30 SC	1.5	HG65 SC	1.5

Top Seal

Top seal can efficiently avoid dust from the surface of rail or tapping hole getting inside the block.

HG Series

Heavy Load Ball Type

Bolt caps for rail mounting holes

Caps are used to cover the mounting holes to prevent chips or other foreign objects from collecting in the holes. The caps will be enclosed in each rail package.

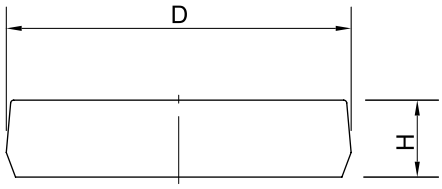

Table 2-1-19 **Dimensions of Bolt Caps for Rail Mounting Holes**

Rail size	Bolt size	Diameter(D) (mm)	Thickness(H) (mm)	Rail size	Bolt size	Diameter(D) (mm)	Thickness(H) (mm)
HGR15	M4	7.65	1.1	HGR35	M8	14.20	3.5
HGR20	M5	9.65	2.5	HGR45	M12	20.25	4.5
HGR25	M6	11.15	2.5	HGR55	M14	23.25	5.0
HGR30	M8	14.20	3.5	HGR65	M16	26.35	5.0

(5) Dimensions of block equipped with the parts

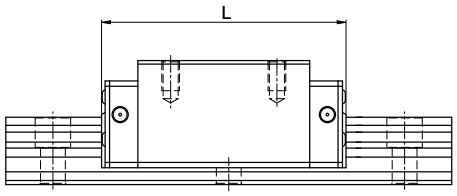

Table 2-1-20 **Overall block length**

unit: mm

Size	Overall block length (L)					
	SS/SH	ZZ/ZH	DD/DH	KK/KH	SW	ZW
HG15C	61.4 (61.8)	69.0 (69.0)	68.0 (68.4)	75.6 (75.6)	63.2 (63.2)	71.0 (71.0)
*HG20C	77.5 (79.3)	82.5 (84.5)	82.5 (84.3)	87.5 (89.5)	78.5 (78.5)	86.3 (87.7)
*HG20H	92.2 (94.0)	97.2 (99.2)	97.5 (99.0)	102.2 (104.2)	93.2 (93.2)	101.0 (102.4)
*HG25C	84.0 (85.0)	89.0 (91.0)	89.0 (90.0)	94.0 (96.0)	85.0 (85.0)	92.8 (94.8)
*HG25H	104.6 (105.6)	109.6 (111.6)	109.6 (110.6)	114.6 (116.6)	105.6 (105.6)	113.4 (115.4)
*HG30C	97.4 (99.4)	105.4 (107.4)	104.8 (106.8)	112.8 (114.8)	99.0 (100.4)	107.2 (109.2)
*HG30H	120.4 (122.4)	128.4 (130.4)	127.8 (129.8)	135.8 (137.8)	122.0 (123.4)	130.2 (132.2)
*HG35C	112.4 (114.4)	120.4 (122.4)	119.8 (121.8)	127.8 (129.8)	115.2 (116.0)	123.4 (125.4)
*HG35H	138.2 (140.2)	146.2 (148.2)	145.6 (147.6)	153.6 (155.6)	141.0 (141.8)	149.2 (151.2)
*HG45C	139.4 (139.4)	150.0 (150.0)	149.4 (149.4)	160.0 (160.0)	140.0 (140.0)	148.8 (150.2)
HG45H	171.2 (171.2)	181.8 (181.8)	181.2 (181.2)	191.8 (191.8)	171.8 (171.8)	180.6 (182.0)
HG55C	166.7 (166.7)	177.1 (177.1)	177.1 (177.1)	187.5 (187.5)	-	-
HG55H	204.8 (204.8)	215.2 (215.2)	215.2 (215.2)	225.6 (225.6)	-	-
HG65C	200.2 (200.2)	208.2 (208.2)	209.2 (209.2)	217.2 (217.2)	-	-
HG65H	259.6 (259.6)	267.6 (267.6)	268.6 (268.6)	276.6 (276.6)	-	-

Note : 1. For the marking of "*", it means this specification is available for SH/ZH/DH/KH dust proof accessories.
2. The marking of "( )" denotes the maximum block length with screws, lips of end seals, etc.

2-1-9 Friction

The maximum value of resistance per end seal are as shown in the table.

Table 2-1-21 **Seal Resistance**

Size	Resistance N (kgf)	Size	Resistance N (kgf)
HG15	2.35 (0.24)	HG35	4.91 (0.5)
HG20	2.75 (0.28)	HG45	3.83 (0.39)
HG25	3.14 (0.32)	HG55	4.61 (0.47)
HG30	3.53 (0.36)	HG65	5.79 (0.59)

Note: 1. 1kgf=9.81N
2. Please inform HIWIN if low friction request is required.

2-1-10 The Accuracy Tolerance of Mounting Surface

(1) The accuracy tolerance of rail-mounting surface

Because of the circular-arc contact design, the HG linear guideway can compensate for some surface-error on installation and still maintain smooth linear motion.
As long as the accuracy requirements for the mounting surface are followed, high accuracy and rigidity of linear motion of the guideway can be obtained without any difficulty. For fast installation and smooth movement ability of the deviation in mounting surface accuracy.

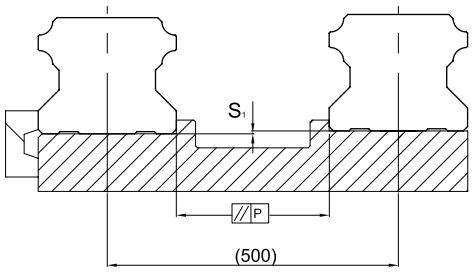

(2) The parallelism tolerance of reference surface (P)

Table 2-1-22 **Max. Parallelism Tolerance (P)** unit: μm

Size	Preload classes		
	Z0	ZA	ZB
HG15	25	18	13
HG20	25	20	18
HG25	30	22	20
HG30	40	30	27
HG35	50	35	30
HG45	60	40	35
HG55	70	50	45
HG65	80	60	55

(3) The accuracy tolerance of reference surface height

Table 2-1-23 **Max. Tolerance of Reference Surface Height (S_1)** unit: μm

Size	Preload classes		
	Z0	ZA	ZB
HG15	130	85	35
HG20	130	85	50
HG25	130	85	70
HG30	170	110	90
HG35	210	150	120
HG45	250	170	140
HG55	300	210	170
HG65	350	250	200

Note : Permissible value is proportional to the axial distance

HG Series

Heavy Load Ball Type

2-1-11 Cautions for Installation

(1) Shoulder heights and fillets

Improper shoulder heights and fillets of mounting surfaces will cause a deviation in accuracy and the interference with the rail or block. As long as the recommended shoulder heights and fillets are followed, installation inaccuracies should be eliminated.

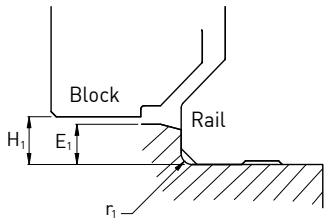

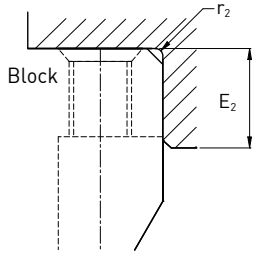

Table 2-1-24 **Shoulder Heights and Fillets**

Size	Max. radius of fillets r_1 (mm)	Max. radius of fillets r_2 (mm)	Shoulder height beside the rail E_1 (mm)	Shoulder height beside the block E_2 (mm)	Clearance under block H_1 (mm)
HG15	0.5	0.5	3	4	4.3
HG20	0.5	0.5	3.5	5	4.6
HG25	1.0	1	5	5	5.5
HG30	1.0	1	5	5	6
HG35	1.0	1	6	6	7.5
HG45	1.0	1	8	8	9.5
HG55	1.5	1.5	10	10	13
HG65	1.5	1.5	10	10	15

(2) Tightening Torque of Bolts for Installation

Improper tightening of bolts will seriously influence the accuracy of Linear Guideway installation. The following tightening torques for different sizes of bolts are recommended.

Table 2-1-25 **Tightening Torque of Mounting Bolts for Rail Installation**

Size	Bolt size	Torque N-cm (kgf-cm)		
		Iron	Casting	Aluminum
HG15	M4×0.7P×16L	392 (40)	274 (28)	206 (21)
HG20	M5×0.8P×16L	883 (90)	588 (60)	441 (45)
HG25	M6×1P×20L	1373 (140)	921 (94)	686 (70)
HG30	M8×1.25P×25L	3041 (310)	2010 (205)	1470 (150)
HG35	M8×1.25P×25L	3041 (310)	2010 (205)	1470 (150)
HG45	M12×1.75P×35L	11772 (1200)	7840 (800)	5880 (600)
HG55	M14×2P×45L	15696 (1600)	10500 (1100)	7840 (800)
HG65	M16×2P×50L	19620 (2000)	13100 (1350)	9800 (1000)

Note:1 kgf=9.81 N

Table 2-1-26 **Tightening Torque of Mounting Bolts for Block Installation**

Size	Bolt size	Torque N-cm (kgf-cm)	Size	Bolt size	Torque N-cm (kgf-cm)
		Iron			Iron
HGH/L15	M4x0.7P	392 (40)	HGH/L35	M8x1.25P	3041 (310)
HGW15	M5x0.8P	883 (90)	HGW35	M10x1.5P	6760 (689)
HGH20	M5x0.8P	883 (90)	HGH/L45	M10x1.5P	6760 (689)
HGW20	M6x1P	1373 (140)	HGW45	M12x1.75P	11772 (1200)
HGH/L25	M6x1P	1373 (140)	HGH/L55	M12x1.75P	11772 (1200)
HGW25	M8x1.25P	3041 (310)	HGW55	M14x2P	15696 (1600)
HGH/L30	M8x1.25P	3041 (310)	HGH65	M16x2P	19620 (2000)
HGW30	M10x1.5P	3041 (310)	HGW65	M16x2P	19620 (2000)

Note:1 kgf=9.81 N

2-1-12 Standard and Maximum Lengths of Rail

HIWIN offers standard rail lengths for customer needs. For non-standard E-values, the recommended dimension should no greater than 1/2 of the pitch (P) dimension. This will prevent an unstable rail end.

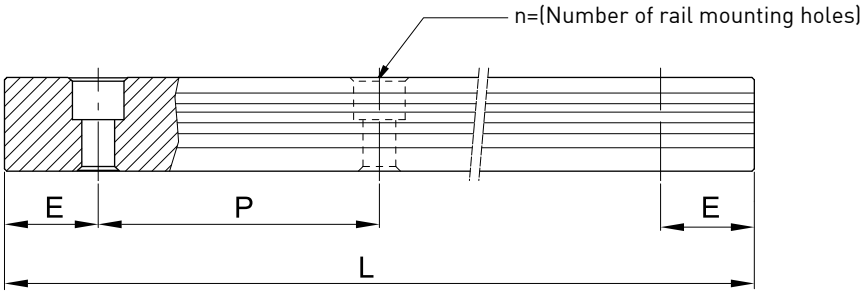

$$L = (n-1) \times P + 2 \times E \quad \text{Eq.2.1}$$

L : Total length of rail (mm)
n : Number of mounting holes
P : Distance between any two holes (mm)
E : Distance from the center of the last hole to the edge (mm)

Table 2-1-27 **Rail Standard Length and Max. Length**

unit: mm

Item	HG15	HG20	HG25	HG30	HG35	HG45	HG55	HG65
Standard Length L(n)	160 (3)	220 (4)	220 (4)	280 (4)	280 (4)	570 (6)	780 (7)	1,270 (9)
	220 (4)	280 (5)	280 (5)	440 (6)	440 (6)	885 (9)	1,020 (9)	1,570 (11)
	280 (5)	340 (6)	340 (6)	600 (8)	600 (8)	1,200 (12)	1,260 (11)	2,020 (14)
	340 (6)	460 (8)	460 (8)	760 (10)	760 (10)	1,620 (16)	1,500 (13)	2,620 (18)
	460 (8)	640 (11)	640 (11)	1,000 (13)	1,000 (13)	2,040 (20)	1,980 (17)	
	640 (11)	820 (14)	820 (14)	1,640 (21)	1,640 (21)	2,460 (24)	2,580 (22)	
	820 (14)	1,000 (17)	1,000 (17)	2,040 (26)	2,040 (26)	2,985 (29)	2,940 (25)	
		1,240 (21)	1,240 (21)	2,520 (32)	2,520 (32)			
			1,600 (27)	3,000 (38)	3,000 (38)			
Pitch (P)	60	60	60	80	80	105	120	150
Distance to End (E_s)	20	20	20	20	20	22.5	30	35
Max. Standard Length	4,000(67)	4,000 (67)	4,000 (67)	3,960 (50)	3,960 (50)	3,930 (38)	3,900 (33)	3,970 (27)
Max. Length	4,000	4,000	4,000	4,000	4,000	4,000	4,000	4,000

Note : 1. Tolerance of E value for standard rail is 0.5~-0.5 mm. Tolerance of E value for jointed rail is 0~-0.3 mm.
2. Maximum standard length means the max. rail length with standard E value on both sides.
3. If different E value is needed, please contact HIWIN.
4. HGR15/HGR20/HGR25 of stainless steel is supplied with the maximum length of 2000mm.

HG Series

Heavy Load Ball Type

2-1-13 Dimensions for HIWIN HG Series

(1) HGH-CA / HGH-HA

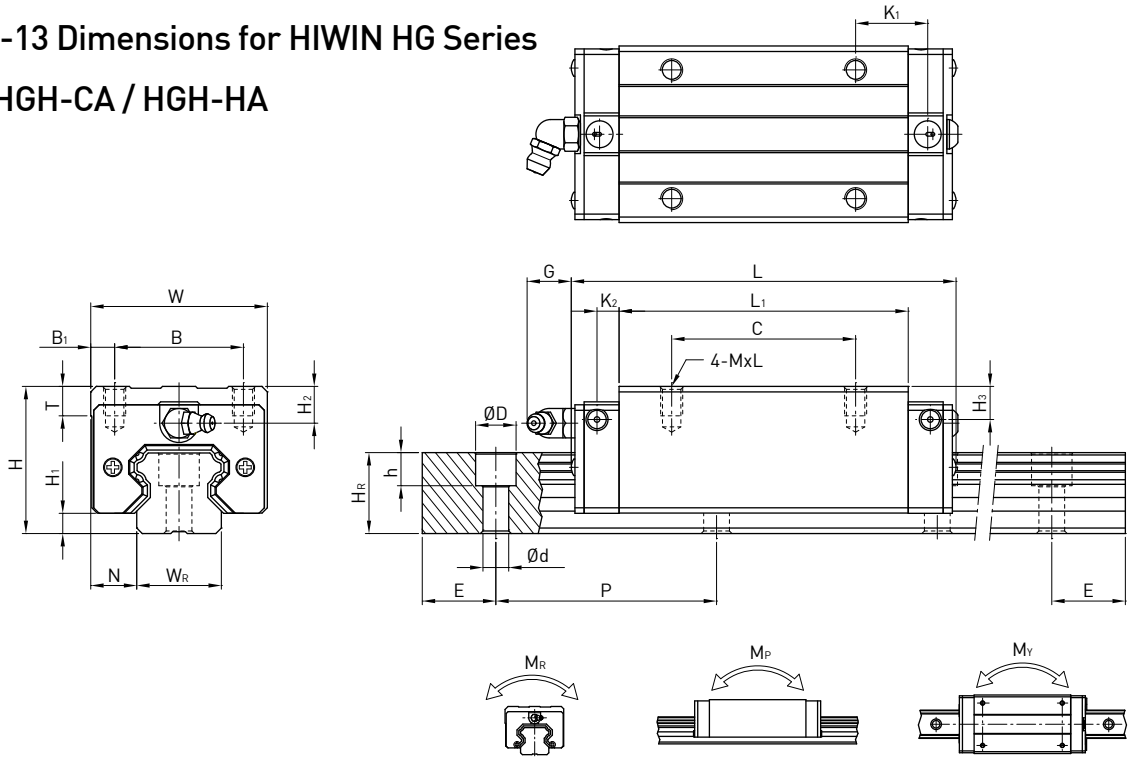

Model No.	Dimensions of Assembly (mm)			Dimensions of Block (mm)													Dimensions of Rail (mm)							Mounting Bolt for Rail	Basic Dynamic Load Rating	Basic Static Load Rating	Static Rated Moment			Weight	
	H	H_1	N	W	B	B_1	C	L_1	L	K_1	K_2	G	Mxl	T	H_2	H_3	W_R	H_R	D	h	d	P	E	(mm)	C(kN)	C_0 (kN)	M_R kN-m	M_P kN-m	M_Y kN-m	Block kg	Rail kg/m
HGH15CA	28	4.3	9.5	34	26	4	26	39.4	61.4	10	4.85	5.3	M4x5	6	7.95	7.7	15	15	7.5	5.3	4.5	60	20	M4x16	14.7	23.47	0.12	0.14	0.14	0.18	1.45
HGH20CA	30	4.6	12	44	32	6	36	50.5	77.5	12.25	6	12	M5x6	8	6	6	20	17.5	9.5	8.5	6	60	20	M5x16	27.1	36.68	0.27	0.28	0.28	0.30	2.21
HGH20HA							50	65.2	92.2	12.6															32.7	47.96	0.35	0.48	0.48	0.39	
HGH25CA	40	5.5	12.5	48	35	6.5	35	58	84	15.7	6	12	M6x8	8	10	9	23	22	11	9	7	60	20	M6x20	34.9	52.82	0.42	0.49	0.49	0.51	3.21
HGH25HA							50	78.6	104.6	18.5															42.2	69.07	0.56	0.73	0.73	0.69	
HGH30CA	45	6	16	60	40	10	40	70	97.4	20.25	6	12	M8x10	8.5	9.5	13.8	28	26	14	12	9	80	20	M8x25	48.5	71.87	0.66	0.7	0.7	0.88	4.47
HGH30HA							60	93	120.4	21.75															58.6	93.99	0.88	1.23	1.23	1.16	
HGH35CA	55	7.5	18	70	50	10	50	80	112.4	20.6	7	12	M8x12	10.2	16	19.6	34	29	14	12	9	80	20	M8x25	64.6	93.88	1.16	1.09	1.09	1.45	6.30
HGH35HA							72	105.8	138.2	22.5															77.9	122.77	1.54	2.02	2.02	1.92	
HGH45CA	70	9.5	20.5	86	60	13	60	97	139.4	23	10	12.9	M10x17	16	18.5	30.5	45	38	20	17	14	105	22.5	M12x35	103.8	146.71	1.98	2.35	2.35	2.73	10.41
HGH45HA							80	128.8	171.2	28.9															125.3	191.85	2.63	4.45	4.45	3.61	
HGH55CA	80	13	23.5	100	75	12.5	75	117.7	166.7	27.35	11	12.9	M12x18	17.5	22	29	53	44	23	20	16	120	30	M14x45	153.2	211.23	3.69	3.684	3.684	4.17	15.08
HGH55HA							95	155.8	204.8	36.4															184.9	276.23	4.88	6.65	6.65	5.49	
HGH65CA	90	15	31.5	126	76	25	70	144.2	200.2	43.1	14	12.9	M16x20	25	15	15	63	53	26	22	18	150	35	M16x50	213.2	287.48	6.65	5.87	5.87	7.00	21.18
HGH65HA							120	203.6	259.6	47.8															277.8	420.17	9.38	12.574	12.574	9.82	

Note : 1 kgf = 9.81 N

(2) HGL-CA / HGL-HA

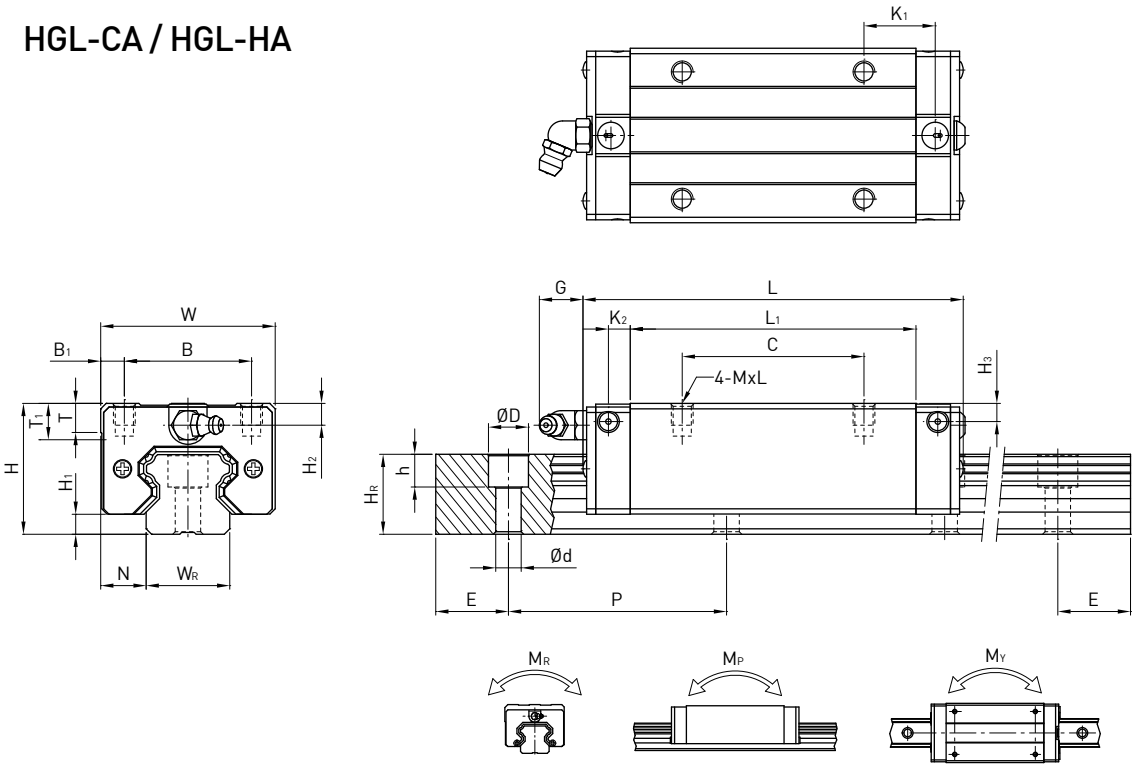

Model No.	Dimensions of Assembly (mm)			Dimensions of Block (mm)													Dimensions of Rail (mm)							Mounting Bolt for Rail	Basic Dynamic Load Rating	Basic Static Load Rating	Static Rated Moment			Weight	
	H	H_1	N	W	B	B_1	C	L_1	L	K_1	K_2	G	Mxl	T	H_2	H_3	W_R	H_R	D	h	d	P	E	(mm)	C(kN)	C_0 (kN)	M_R kN-m	M_P kN-m	M_Y kN-m	Block kg	Rail kg/m
HGL15CA	24	4.3	9.5	34	26	4	26	39.4	61.4	10	4.85	5.3	M4x4	6	3.95	3.7	15	15	7.5	5.3	4.5	60	20	M4x16	14.7	23.47	0.12	0.14	0.14	0.14	1.45
HGL25CA	36	5.5	12.5	48	35	6.5	35	58	84	15.7	6	12	M6x6	8	6	5	23	22	11	9	7	60	20	M6x20	34.9	52.82	0.42	0.49	0.49	0.42	3.21
HGL25HA							50	78.6	104.6	18.5															42.2	69.07	0.56	0.73	0.73	0.57	
HGL30CA	42	6	16	60	40	10	40	70	97.4	20.25	6	12	M8x10	8.5	6.5	10.8	28	26	14	12	9	80	20	M8x25	48.5	71.87	0.66	0.7	0.7	0.78	4.47
HGL30HA							60	93	120.4	21.75															58.6	93.99	0.88	1.23	1.23	1.03	
HGL35CA	48	7.5	18	70	50	10	50	80	112.4	20.6	7	12	M8x12	10.2	9	12.6	34	29	14	12	9	80	20	M8x25	64.6	93.88	1.16	1.09	1.09	1.14	6.30
HGL35HA							72	105.8	138.2	22.5															77.9	122.77	1.54	2.02	2.02	1.52	
HGL45CA	60	9.5	20.5	86	60	13	60	97	139.4	23	10	12.9	M10x17	16	8.5	20.5	45	38	20	17	14	105	22.5	M12x35	103.8	146.71	1.98	2.35	2.35	2.08	10.41
HGL45HA							80	128.8	171.2	28.9															125.3	191.85	2.63	4.45	4.45	2.75	
HGL55CA	70	13	23.5	100	75	12.5	75	117.7	166.7	27.35	11	12.9	M12x18	17.5	12	19	53	44	23	20	16	120	30	M14x45	153.2	211.23	3.69	3.684	3.684	3.25	15.08
HGL55HA							95	155.8	204.8	36.4															184.9	276.23	4.88	6.65	6.65	4.27	

Note : 1 kgf = 9.81 N

HG Series

Heavy Load Ball Type

(3) HGW-CA / HGW-HA

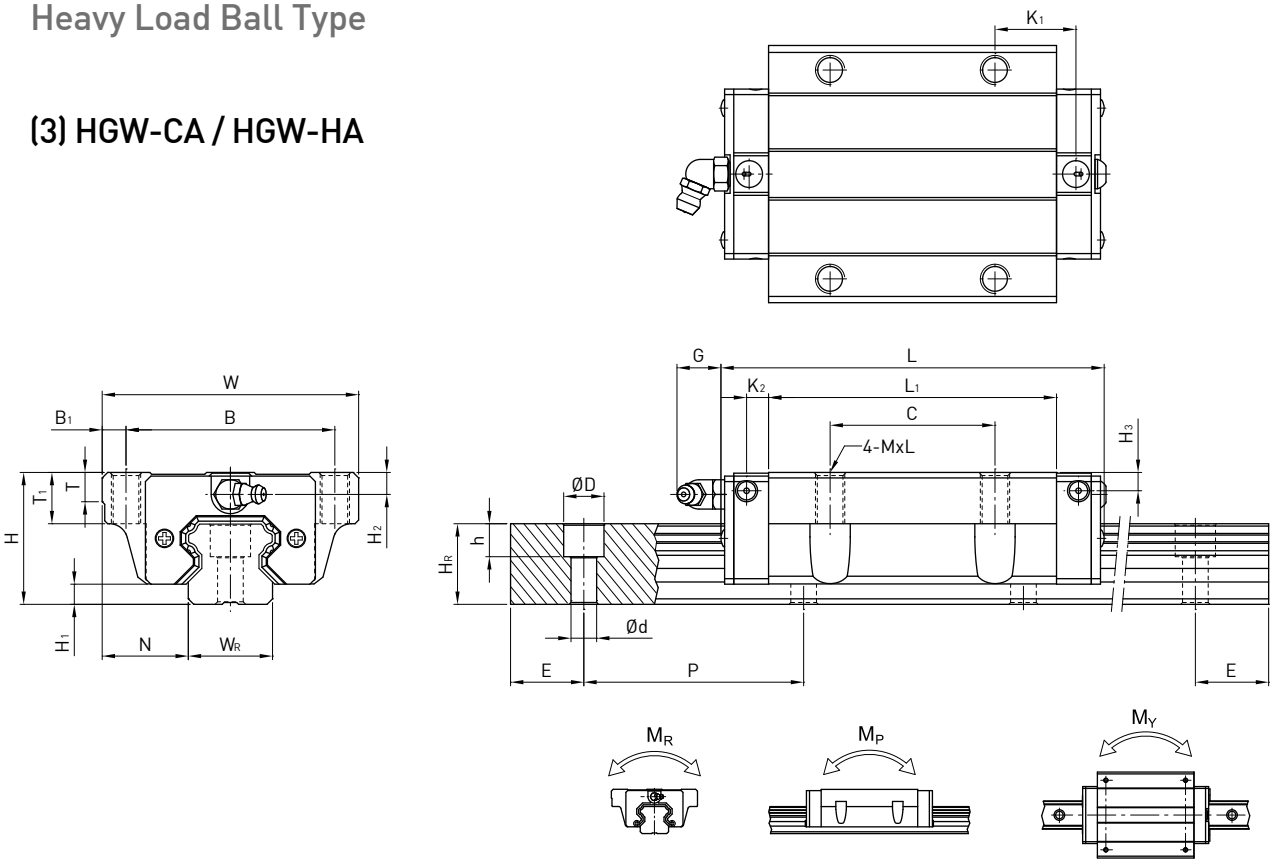

Model No.	Dimensions of Assembly (mm)			Dimensions of Block (mm)														Dimensions of Rail (mm)							Mounting Bolt for Rail	Basic Dynamic Load Rating	Basic Static Load Rating	Static Rated Moment			Weight	
	H	H_1	N	W	B	B_1	C	L_1	L	K_1	K_2	G	M	T	T_1	H_2	H_3	W_R	H_R	D	h	d	P	E	(mm)	C(kN)	C_0(kN)	M_R kN-m	M_P kN-m	M_Y kN-m	Block kg	Rail kg/m
HGW15CA	24	4.3	16	47	38	4.5	30	39.4	61.4	8	4.85	5.3	M5	6	8.9	3.95	3.7	15	15	7.5	5.3	4.5	60	20	M4x16	14.7	23.47	0.12	0.14	0.14	0.17	1.45
HGW20CA	30	4.6	21.5	63	53	5	40	50.5	77.5	10.25	6	12	M6	8	10	6	6	20	17.5	9.5	8.5	6	60	20	M5x16	27.1	36.68	0.27	0.28	0.28	0.40	2.21
HGW20HA								65.2	92.2	17.6																32.7	47.96	0.35	0.48	0.48	0.52	
HGW25CA	36	5.5	23.5	70	57	6.5	45	58	84	10.7	6	12	M8	8	14	6	5	23	22	11	9	7	60	20	M6x20	34.9	52.82	0.42	0.49	0.49	0.59	3.21
HGW25HA								78.6	104.6	21																42.2	69.07	0.56	0.73	0.73	0.80	
HGW30CA	42	6	31	90	72	9	52	70	97.4	14.25	6	12	M10	8.5	16	6.5	10.8	28	26	14	12	9	80	20	M8x25	48.5	71.87	0.66	0.7	0.7	1.09	4.47
HGW30HA								93	120.4	25.75																58.6	93.99	0.88	1.23	1.23	1.44	
HGW35CA	48	7.5	33	100	82	9	62	80	112.4	14.6	7	12	M10	10.1	18	9	12.6	34	29	14	12	9	80	20	M8x25	64.6	93.88	1.16	1.09	1.09	1.56	6.30
HGW35HA								105.8	138.2	27.5																77.9	122.77	1.54	2.02	2.02	2.06	
HGW45CA	60	9.5	37.5	120	100	10	80	97	139.4	13	10	12.9	M12	15.1	22	8.5	20.5	45	38	20	17	14	105	22.5	M12x35	103.8	146.71	1.98	2.35	2.35	2.79	10.41
HGW45HA								128.8	171.2	28.9																125.3	191.85	2.63	4.45	4.45	3.69	
HGW55CA	70	13	43.5	140	116	12	95	117.7	166.7	17.35	11	12.9	M14	17.5	26.5	12	19	53	44	23	20	16	120	30	M14x45	153.2	211.23	3.69	3.684	3.684	4.52	15.08
HGW55HA								155.8	204.8	36.4																184.9	276.23	4.88	6.65	6.65	5.96	
HGW65CA	90	15	53.5	170	142	14	110	144.2	200.2	23.1	14	12.9	M16	25	37.5	15	15	63	53	26	22	18	150	35	M16x50	213.2	287.48	6.65	5.87	5.87	9.17	21.18
HGW65HA								203.6	259.6	52.8																277.8	420.17	9.38	12.574	12.574	12.89	

Note : 1 kgf = 9.81 N

(4) HGW-CB / HGW-HB

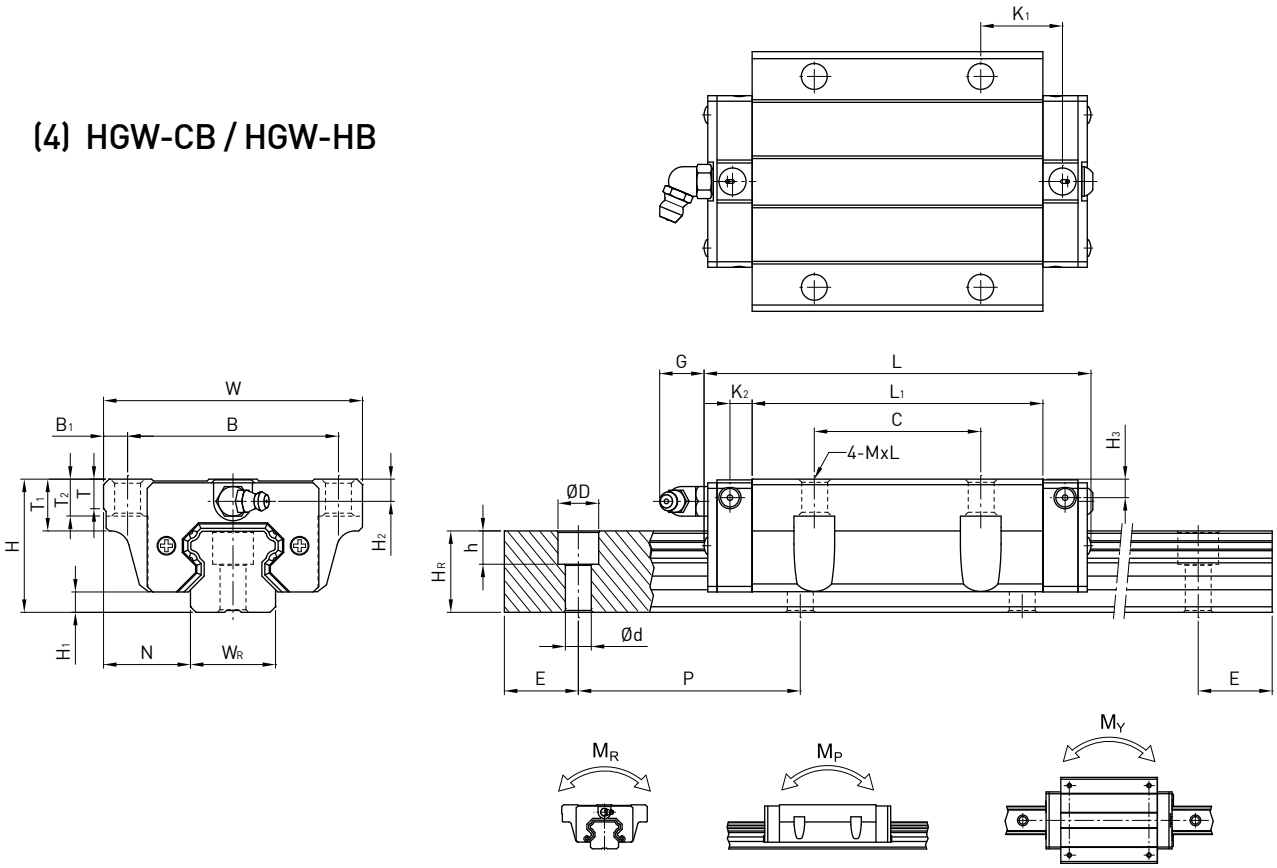

Model No.	Dimensions of Assembly (mm)			Dimensions of Block (mm)															Dimensions of Rail (mm)							Mounting Bolt for Rail	Basic Dynamic Load Rating	Basic Static Load Rating	Static Rated Moment			Weight	
	H	H_1	N	W	B	B_1	C	L_1	L	K_1	K_2	G	M	T	T_1	T_2	H_2	H_3	W_R	H_R	D	h	d	P	E	(mm)	C(kN)	C_0 (kN)	M_R kN-m	M_P kN-m	M_Y kN-m	Block kg	Rail kg/m
HGW15CB	24	4.3	16	47	38	4.5	30	39.4	61.4	8	4.85	5.3	Ø4.5	6	8.9	6.95	3.95	3.7	15	15	7.5	5.3	4.5	60	20	M4x16	14.7	23.47	0.12	0.14	0.14	0.17	1.45
HGW20CB	30	4.6	21.5	63	53	5	40	50.5	77.5	10.25	6	12	Ø6	8	10	9.5	6	6	20	17.5	9.5	8.5	6	60	20	M5x16	27.1	36.68	0.27	0.28	0.28	0.40	2.21
HGW20HB								65.2	92.2	17.6																	32.7	47.96	0.35	0.48	0.48	0.52	
HGW25CB	36	5.5	23.5	70	57	6.5	45	58	84	10.7	6	12	Ø7	8	14	10	6	5	23	22	11	9	7	60	20	M6x20	34.9	52.82	0.42	0.49	0.49	0.59	3.21
HGW25HB								78.6	104.6	21																	42.2	69.07	0.56	0.73	0.73	0.80	
HGW30CB	42	6	31	90	72	9	52	70	97.4	14.25	6	12	Ø9	8.5	16	10	6.5	10.8	28	26	14	12	9	80	20	M8x25	48.5	71.87	0.66	0.7	0.7	1.09	4.47
HGW30HB								93	120.4	25.75																	58.6	93.99	0.88	1.23	1.23	1.44	
HGW35CB	48	7.5	33	100	82	9	62	80	112.4	14.6	7	12	Ø9	10.1	18	13	9	12.6	34	29	14	12	9	80	20	M8x25	64.6	93.88	1.16	1.09	1.09	1.56	6.30
HGW35HB								105.8	138.2	27.5																	77.9	122.77	1.54	2.02	2.02	2.06	
HGW45CB	60	9.5	37.5	120	100	10	80	97	139.4	13	10	12.9	Ø11	15.1	22	15	8.5	20.5	45	38	20	17	14	105	22.5	M12x35	103.8	146.71	1.98	2.35	2.35	2.79	10.41
HGW45HB								128.8	171.2	28.9																	125.3	191.85	2.63	4.45	4.45	3.69	
HGW55CB	70	13	43.5	140	116	12	95	117.7	166.7	17.35	11	12.9	Ø14	17.5	26.5	17	12	19	53	44	23	20	16	120	30	M14x45	153.2	211.23	3.69	3.684	3.684	4.52	15.08
HGW55HB								155.8	204.8	36.4																	184.9	276.23	4.88	6.65	6.65	5.96	
HGW65CB	90	15	53.5	170	142	14	110	144.2	200.2	23.1	14	12.9	Ø16	25	37.5	23	15	15	63	53	26	22	18	150	35	M16x50	213.2	287.48	6.65	5.87	5.87	9.17	21.18
HGW65HB								203.6	259.6	52.8																	277.8	420.17	9.38	12.574	12.574	12.89	

Note : 1 kgf = 9.81 N

HG Series

Heavy Load Ball Type

(5) HGW-CC / HGW-HC

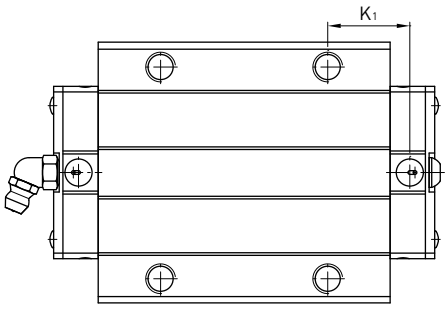

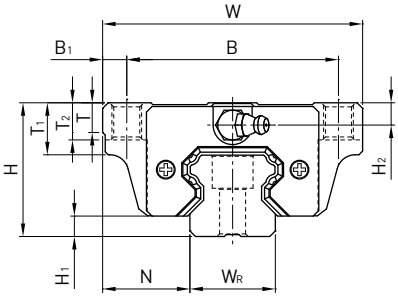

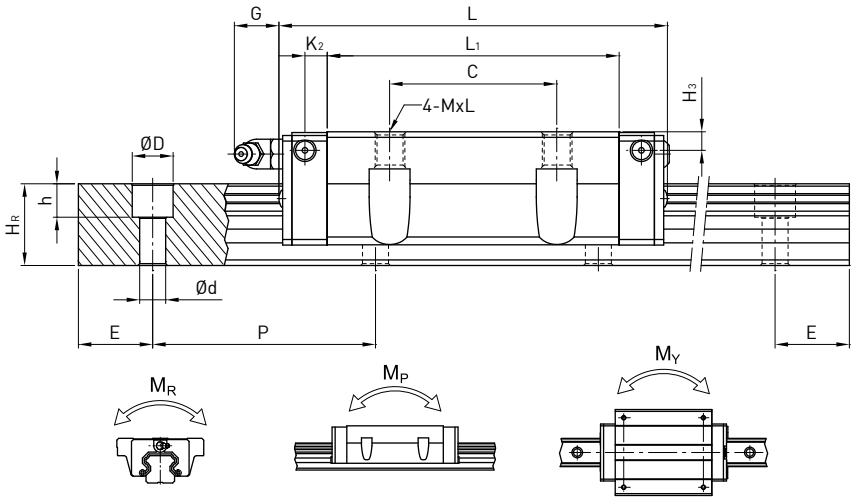

Model No.	Dimensions of Assembly (mm)			Dimensions of Block (mm)															Dimensions of Rail (mm)							Mounting Bolt for Rail	Basic Dynamic Load Rating	Basic Static Load Rating	Static Rated Moment			Weight	
	H	H_1	N	W	B	B_1	C	L_1	L	K_1	K_2	G	M	T	T_1	T_2	H_2	H_3	W_R	H_R	D	h	d	P	E	(mm)	C(kN)	C_0 (kN)	M_R kN-m	M_P kN-m	M_Y kN-m	Block kg	Rail kg/m
HGW15CC	24	4.3	16	47	38	4.5	30	39.4	61.4	8	4.85	5.3	M5	6	8.9	6.95	3.95	3.7	15	15	7.5	5.3	4.5	60	20	M4x16	14.7	23.47	0.12	0.14	0.14	0.17	1.45
HGW20CC	30	4.6	21.5	63	53	5	40	50.5	77.5	10.25	6	12	M6	8	10	9.5	6	6	20	17.5	9.5	8.5	6	60	20	M5x16	27.1	36.68	0.27	0.28	0.28	0.40	2.21
HGW20HC								65.2	92.2	17.6																	32.7	47.96	0.35	0.48	0.48	0.52	
HGW25CC	36	5.5	23.5	70	57	6.5	45	58	84	10.7	6	12	M8	8	14	10	6	5	23	22	11	9	7	60	20	M6x20	34.9	52.82	0.42	0.49	0.49	0.59	3.21
HGW25HC								78.6	104.6	21																	42.2	69.07	0.56	0.73	0.73	0.80	
HGW30CC	42	6	31	90	72	9	52	70	97.4	14.25	6	12	M10	8.5	16	10	6.5	10.8	28	26	14	12	9	80	20	M8x25	48.5	71.87	0.66	0.7	0.7	1.09	4.47
HGW30HC								93	120.4	25.75																	58.6	93.99	0.88	1.23	1.23	1.44	
HGW35CC	48	7.5	33	100	82	9	62	80	112.4	14.6	7	12	M10	10.1	18	13	9	12.6	34	29	14	12	9	80	20	M8x25	64.6	93.88	1.16	1.09	1.09	1.56	6.30
HGW35HC								105.8	138.2	27.5																	77.9	122.77	1.54	2.02	2.02	2.06	
HGW45CC	60	9.5	37.5	120	100	10	80	97	139.4	13	10	12.9	M12	15.1	22	15	8.5	20.5	45	38	20	17	14	105	22.5	M12x35	103.8	146.71	1.98	2.35	2.35	2.79	10.41
HGW45HC								128.8	171.2	28.9																	125.3	191.85	2.63	4.45	4.45	3.69	
HGW55CC	70	13	43.5	140	116	12	95	117.7	166.7	17.35	11	12.9	M14	17.5	26.5	17	12	19	53	44	23	20	16	120	30	M14x45	153.2	211.23	3.69	3.684	3.684	4.52	15.08
HGW55HC								155.8	204.8	36.4																	184.9	276.23	4.88	6.65	6.65	5.96	
HGW65CC	90	15	53.5	170	142	14	110	144.2	200.2	23.1	14	12.9	M16	25	37.5	23	15	15	63	53	26	22	18	150	35	M16x50	213.2	287.48	6.65	5.87	5.87	9.17	21.18
HGW65HC								203.6	259.6	52.8																	277.8	420.17	9.38	12.574	12.574	12.89	

Note : 1 kgf = 9.81 N

(6) Dimesions for HGR-T (Rail Mounting from Bottom)

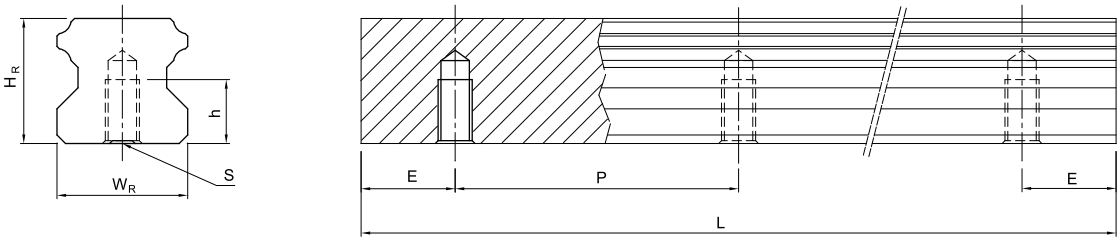

Model No.	Dimensions of Rail (mm)						Weight
	W_R	H_R	S	h	P	E	(kg/m)
HGR15T	15	15	M5 x 0.8P	8	60	20	1.48
HGR20T	20	17.5	M6 x 1P	10	60	20	2.29
HGR25T	23	22	M6 x 1P	12	60	20	3.35
HGR30T	28	26	M8 x 1.25P	15	80	20	4.67
HGR35T	34	29	M8x1.25P	17	80	20	6.51
HGR45T	45	38	M12 x 1.75P	24	105	22.5	10.87
HGR55T	53	44	M14 x 2P	24	120	30	15.67
HGR65T	63	53	M20 x 2.5P	30	150	35	21.73