BOLLFILTER Duplex
TYPE 2.04.5

mit Flanschanschlüssen DN 25–DN 80
optional mit Heizung

Application

Filtration of all types of liquids. Installation in suction or discharge lines to protect downstream system components (valves, pumps, gate valves, pressure gauges, piping, etc.) from contamination or silting.

Operation

Operation

The Type 2.04.5 dual filter can be switched over without pressure surges during operation. Except for checking the seals and cleaning the filter, the filter is completely maintenance-free. The switch valve must be set so that one filter chamber is in operation while the second is cleaned, refilled, and kept in reserve.

The pressure drop indicates the degree of contamination in the filter. The system does not need to be shut down when contamination occurs. Simply activate the switch valve to bring the filter chamber on standby into operation. The chamber that was previously in operation is simultaneously shut down.

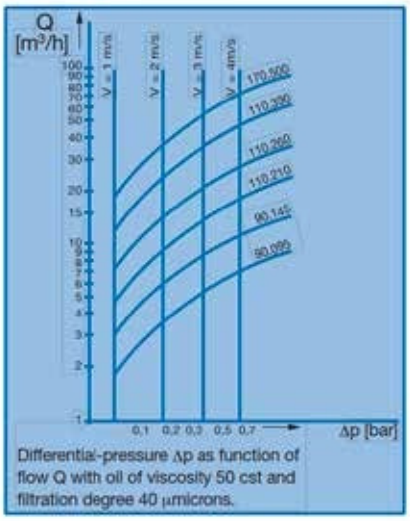

Differential-pressure Δp as function of flow Q with oil of viscosity 50 cst and filtration degree 40 µmicrons.

Accessories

A Type 4.36 contamination indicator can be installed upon request. Magnetic rods can be installed.



Cleaning

- Switch the cockerel to the clean filter chamber
- Dirty filter chamber with the Release the pressure from the bleed screw
- Housing cover of the contaminated Remove the filter chamber
- Remove the filter element
- Rinse the filter element thoroughly in a cleaning solution, such as BOLL-CLEAN 2000, and blow it dry with compressed air. See the ''Maintenance and Care'' section of the operating instructions for details.

Technical Specifications

- Filter housing made of ductile iron; water filter interior additionally nickel-plated
- Gray cast iron diverter valves; rubber-coated for water filters
- Filter elements: either star screen 1 or basket screen 2; star screen available as a disposable element
- Filter fineness: 10 microns to 5 mm
- Operating pressure up to 25 bar

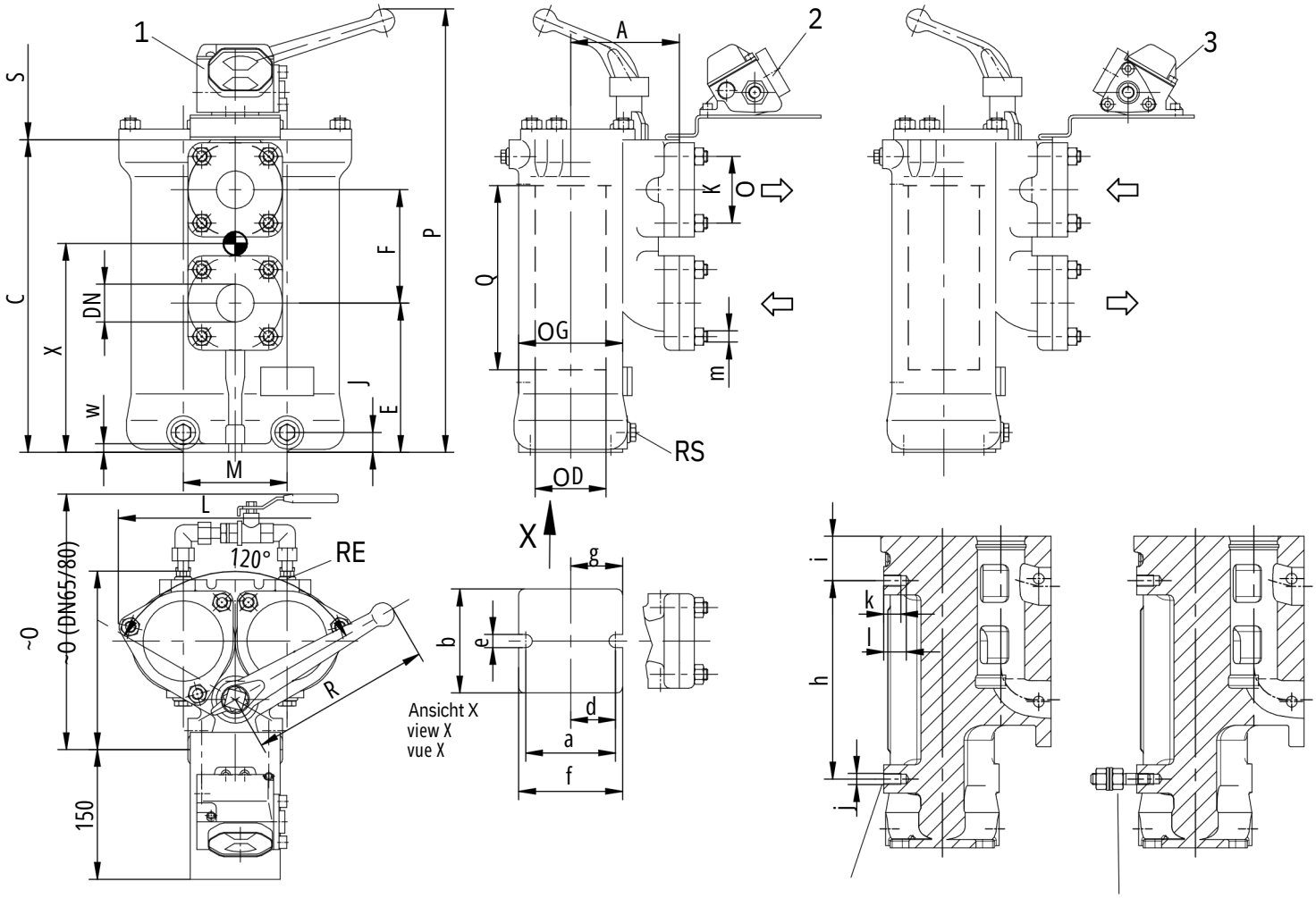

RE EntlüftungG1/4
vent G1/4
désaération G1/4

RS EntleerungG3/8
drain G3/8
vidange G3/8

Flanschanschluss:
flanged joint:
raccord à brides:

auf Wunsch: Wandbefestigung
connection at side on request
fixation murale sur demande

auf Wunsch: Erdungsanschluss
earthing connection
mise à la terre

Auf Wunsch, on request, sur demande

1 Differenzdruckanzeiger (DDA)
differencial pressure indicator
indicateur de différence de pression

2 DDA-Anbau und Durchflussrichtung für Sternsiebe
DPI-installation and flow direction for star-element
IDP-assemblage et direction de passage pour paniers étoiles

3 DDA-Anbau und Durchflussrichtung für Korbsiebe
DPI-installation and flow direction for basket-element
IDP-assemblage et direction de passage pour paniers à corbeille

S Siebausbau
filter element removal
démontage du panier

Schwerpunkt
center of gravity
centre de gravité

Stiftschraube DIN939
stud bolt DIN939
boulon DIN939

DN	K	m
25	80	M10 X 25
32	80	M10 X 25

Sechskantschraube DIN931
hexagon screw DIN931
vis hexagonale DIN931

DN	K	m
40	100	ø14 M12 X 50
50	110	ø14 M12 X 50
65	130	ø18 M16 X 50
80	150	ø18 M16 X 50

	h	i	j	k	l
DN25/3	130	36	M1	16	20
2	210	47	0	17	25
DN40/5	350	61	M1	17	25
0 DN65	510	66	2	17	25
DN80			M1		
			2		
			M1		
			2		

Gehäuse gegossen, EN-GJS-400-15
housing cast
corps moulé

Betriebsüberdruck: 25 bar bei 160°C
working pressure: 25 bar at 160°C
pression de service: 25 bar à 160°C

Allgemeintoleranzen DIN ISO 2768-mK
general tolerance DIN ISO 2768-mK
tolérances générales DIN ISO 2768-mK

Bestellbeispiel
ordering example
exemple de commande

Typ	øG	Q	DN
2.04.5	90	145	32

øG	Q	DN MIN.	DN MAX.	A	C	øD	E	F	J	L	M	~O	P	~R	S	a	b	d	e	f	g	w	VOL. LITER	KG	X
90	95	25	32	95	199	65	79	80	22	206	92	153	346	193	170	85	92		12	110		9	2X1	17	141
90	145	32	40	95	249	65	129	80	22	206	92	154	396	193	220	85	92		12	110		9	2X1	18	164
110	210	40	50	115	330	85	157	120	20	250	110	184	470	193	300	85	110		14	110		9	2X2	29	207
110	260	50	65	128	385	85	208	120	20	250	110	196	525	193	350	85	110		14	110		9	2X3	36	245
110	390	65	80	180	523	85	317	140	34	260	120	337	678	318	480	120	65	75	14	200	137	20	2X4	55	344
170	500	80	100	214	690	124	453	160	50	370	203	397	829	318	700	174	120	105	18	220	135	22	2X13	107	438

subject to alterations

Änderungen vorbehalten!

Doppelfilter 2.04.5

duplex filter duplex filter

Z45540 Z ust. i ndex 05

Blatt she et 1/1

Datum date 07.09.2023