bürkert
FLUID CONTROL SYSTEMS







SideCONTROL digital electropneumatic positioner

- Compact and robust design
- Easy start-up using X.TUNE function
- Integrated diagnostic functions for valve monitoring
- Dynamic actuating system with no air consumption in controlled state
- EtherNet/IP, PROFINET, Modbus TCP, PROFIBUS DP-V1 or Bürkert system bus (büS)

Product variants described in the data sheet may differ from the product presentation and description.
The German or English (EU) data sheet is the master version. Other language versions may be temporarily out of date and will be updated accordingly.

Can be combined with



Type 8805 ▸
Ball valve / Butterfly valve with pneumatic rotary actuator



Type 2051 ▸
Pneumatic rotary actuator



Type 8798 ▸
Remote sensor for pneumatically actuated process valves



Type 2301 ▸
Pneumatically operated 2-way globe control valve



Type 2300 ▸
Pneumatically operated 2-way angle seat control valve ELEMENT



Type 2103 ▸
2/2-way diaphragm valve with pneumatic stainless steel actuator (Type ELEMENT) for decentralised automation

Type description

The robust and compact positioner is designed with standardisation in accordance with IEC 60534-6-1 or VDI/VDE 3845 (IEC 60534-6-2) for installation on linear and quarter-turn actuators. In addition, the variant with remote position sensor can be deployed for closed-loop control of Bürkert process control valves. The SideCONTROL digital electropneumatic positioner can be operated with all standard current and voltage standard signals and can also optionally be equipped with the fieldbus interface. The positioner is equipped with additional diagnostic functions to monitor the valve. Valve diagnostic messages via status signals are issued in accordance with NE107 (NAMUR) and recorded as historical entries. The diagnostics can be used to monitor the operating conditions of the control valve which makes maintenance decisions predictable and optimises the availability of the plants as required. Operation is via the external operating and display module consisting of a graphic display with backlight. For the user, this means very simple and clear operation, which is identical to the Bürkert ELEMENT Type 8692/8693 positioners and process controllers. The pneumatic actuating system can be used equally for single-acting and double-acting actuators. It features a defined safety response in the event of failure of the electrical or pneumatic power supply and has an enormous air capacity range with pressure supply up to 7 bar.

DTS 1000120587 EN Version: A Status: RL (released | freigegeben | valide) printed: 28.10.2026

© Christian Bürkert GmbH & Co. KG, subject to change without notice

Visit product website ▸

Table of contents

1. General technical data 4

1.1. Positioner SideCONTROL Type 8792 ... 4
1.2. Linear remote position sensor (ELEMENT Type 8798) ... 6
1.3. Rotary remote position sensor (NAMUR) ... 7
1.4. Position feedback unit with proximity switches (accessories for retrofitting) ... 7
1.5. Booster ... 8

2. Approvals and conformities 9

2.1. General notes ... 9
2.2. Conformity ... 9
2.3. Standards ... 9
2.4. Functional Safety ... 9
2.5. Explosion protection ... 9
Positioner SideCONTROL Type 8792 ... 9
2.6. North America (USA/Canada) ... 10
Positioner SideCONTROL Type 8792 ... 10
Linear remote position sensor (ELEMENT Type 8798) ... 10
Rotary remote position sensor (NAMUR Type 8798) ... 10
2.7. Others ... 10
China Compulsory Certification (CCC) ... 10

3. Dimensions 11

3.1. NAMUR variant ... 11
NAMUR variant with booster ... 12
3.2. Remote variant ... 13
3.3. Mounting specification of NAMUR/remote variant ... 14
NAMUR variant ... 14
Remote variant ... 14
3.4. ATEX/IECEx variant ... 15
3.5. Remote position sensor variant ... 15
3.6. Mounting on control valves according to NAMUR ... 16

4. Product connections 17

4.1. Electrical connection ... 17
Multipole connection ... 17
PROFIBUS DP connection ... 19
EtherNet/IP, PROFINET, Modbus TCP connection ... 20
Bürkert system bus (büS) connection ... 21

5. Performance specifications 23

5.1. Signal flow diagram ... 23
Position control loop ... 23
Additional software options of positioner SideCONTROL Type 8792 (extract) ... 23
5.2. Interface diagram ... 24
Variant without fieldbus communication ... 24
Variant with fieldbus communication ... 24

DTS 1000120587 EN Version: A Status: RL (released | freigegeben | valide) printed: 28.10.2026

6. Product installation **25**

6.1. Mounting options 25
NAMUR variant 25
Remote variant 26
Position feedback unit with proximity switches 27
For retrofitting on Booster.ready 27
6.2. Mounting options 28
NAMUR variant for Samson valves 28
6.3. Combination options with pneumatic process valves 30

7. Ordering information **31**

7.1. Bürkert eShop 31
7.2. Bürkert product filter 31
7.3. Ordering chart 32
Positioner SideCONTROL Type 8792 NAMUR variant 32
Positioner SideCONTROL Type 8792, remote variant 33
Remote position sensor for remote variant of Type 8792 SideCONTROL 33
7.4. Ordering chart accessories 34
Standard accessories 34
Accessories SideCONTROL NAMUR 34
Accessories SideCONTROL remote 34

DTS 1000120587 EN Version: A Status: RL (released | freigegeben | valide) printed: 28.10.2026

1. General technical data

1.1. Positioner SideCONTROL Type 8792

Product properties	
Dimensions	Further information can be found in chapter "3. Dimensions" on page 11.
Material	
Housing	Plastic-coated aluminium
Seal	EPDM, NBR, FKM
Operation	
Display	Graphic display with backlight and intuitive menu navigation
Operating keys	Membrane keypad with 4 keys
Service interface	Connection to PC via USB-büS interface set
Configuration tool	Bürkert Communicator PACTware (only for device variants with PROFIBUS)
Commissioning	
Initialisation of positioner	Automatically by X.TUNE function (automatic adjustment of the positioner)
Status display	
Visual position indicator (mechanical)	Integrated (for NAMUR variant)
Communication	
Fieldbus	EtherNet/IP, PROFINET, Modbus TCP, PROFIBUS DP-V1
Digital	Bürkert system bus (büS) (based on CANopen)
Performance data	
Position sensor	
Integrated position sensor (NAMUR)	Conductive plastic rotary potentiometer
External position sensor (remote)	Linear or rotary
Measuring range for quarter-turn actuator	
PROFIBUS	Rotation angle: 30°...150°
EtherNet/IP, PROFINET, Modbus TCP, büS, without fieldbus communication	Rotation angle: 30°...180°
Stroke range for linear actuator	3...130 mm, depending on the lever of the attachment kit
Electrical data	
Operating voltage	24 V DC ± 10 %
Residual ripple	Max. 10 %
Power consumption	≤ 5 W
Protection class	III according to DIN EN 61140
Input/output	
Digital input	1 digital input, galvanically isolated, 0...5 V = log „0", 10...30 V = log „1"
Digital output	2 digital outputs (optional), galvanically isolated
Current limit per digital output	100 mA, output is clocked in case of overload
Analogue output	1 output (optional) 0/4...20 mA, 0...5/10 V
Set-point value input data	
Set-point signal	
Set-point value setting default	0/4...20 mA 0...5/10 V
Input resistance	0/4...20 mA: 70 Ω 0...5/10 V: 20 kΩ
Electrical connection	
Multipole variant	Circular plug-in connectors: M8, M12 depending on device variant (Further information can be found in chapter "4. Product connections" on page 17)
Cable bushing variant	2x M20 × 1.5 (cable Ø 6...12 mm) on screw-type terminals (0.14...1.5 mm²)
Remote variant	1x M12 × 1.5 (cable Ø 3...6.5 mm)

DTS 1000120587 EN Version: A Status: RL (released | freigegeben | valide) printed: 28.10.2026

Pneumatic data	
Control medium	**Neutral gases, air, quality class according to ISO 8573 - 1**
Dust content	Class 7 (particle size < 40 µm)
Particle density	Class 5 (< 10 mg/m³)
Pressure dew point	Class 3 (≤ - 20 °C or min. 10 °C below the lowest operating temperature)
Oil content	Class X (< 25 mg/m³)
Air intake filter	**Exchangeable**
Mesh size	Approx. 0.1 mm
Supply pressure	1.4...7 bar [1,) 2,)]
Pilot air port	G ¼ internal thread
Actuating system	
Universal air flow rate	
Single and double-acting	50 l_N/min (at 1.4 bar [2,)]) for aeration and ventilation 150 l_N/min (at 6 bar [2,)]) for aeration and ventilation Q_{Nn} = 100 l_N/min
Booster.ready	A booster module can be fitted to appliances with the Booster.ready function, increasing the air flow rate to > 1000 l_N/min.
Low air capacity	
Single-acting	Q_{Nn} = 7 l_N/min (Q_{Nn} according to definition with pressure drop from 7 to 6 bar abs)
Approvals and conformities	
Functional Safety	
SIL AC (architectural constraints): SIL AC 2: According to IEC 61508 - 2 up to SIL 2 at HFT = 0 or SIL 3 at HFT = 1 in low demand mode.	
Further information can be found in chapter "2. Approvals and conformities" on page 9.	
Explosion protection	
Ignition protection class	II 3D Ex tc IIIC T135 °C Dc II 3G Ex ec IIC T4 Gc
ATEX	BVS 16 ATEX E 118 X II 3G Ex ec ic IIC T4 Gc II 3D Ex tc IIIC T135 °C Dc
IECEx	IECEx BVS 16.0091 X Ex ec ic IIC T4 Gc Ex tc IIIC T135 °C Dc
Further information can be found in chapter "2.5. Explosion protection" on page 9.	
North America (USA/Canada)	
CSA for Canada and the USA	UL 429 (Electrically operated valves) CSA C22.2 No. 139 (Electrically operated valves)
FM Explosion Protection	Increased Safety for Class I, Zone 2, AEx ec ic IIC T4 Gc and Zone 22, AEx tc IIIB T135 °C Dc hazardous (classified) locations, indoors and outdoors (IP54). Alternatively marked as Class I Division 2 Groups A, B, C and D; T4 and Class II, III Division 2 Groups F and G; T135 °C.
Further information can be found in chapter "2.6. North America (USA/Canada)" on page 10.	
Others	
China Compulsory Certification (CCC)	The products with Ex approval are suitable for import and use for hazardous applications in China. Further information can be found in chapter "2.7. Others" on page 10.
Further information can be found in chapter "2. Approvals and conformities" on page 9.	
Environment and installation	
Operating conditions	
Ambient temperature	
With ATEX/IECEx approval	0 °C...+ 60 °C
Without Ex approval	- 10 °C...+ 60 °C
Degree of protection	IP65/IP67 according to EN 60529, 4X according to NEMA 250 standard
Operating altitude	Up to 2000 m above sea level

DTS 1000120587 EN Version: A Status: RL (released | freigegeben | valide) printed: 28.10.2026

Installation and mechanical data	
Mounting variant	NAMUR according to IEC 60534 - 6 - 1 or VDI/VDE 3845 (IEC 60534 - 6 - 2), remote
Installation position	As required, display above or laterally
Valve actuator (type, size)	Rotary and linear actuators according to NAMUR, ELEMENT Type 2301, 2300 (actuator size Ø 70/90/130 mm) and CLASSIC (actuator size Ø175/225 mm) in combination with remote variant, as well as special adaptations for NAMUR and remote variants
Attachment kit	Further information can be found in chapter "7.4. Ordering chart accessories" on page 34.

1.) The supply pressure has to be 0.5...1 bar above the minimum required pilot pressure for the valve actuator.
2.) Pressure data: overpressure to atmospheric pressure

1.2. Linear remote position sensor (ELEMENT Type 8798)

Note:
When the positioner is mounted separately from the actuator, the length of the pneumatic pilot air lines influences the dynamics and achievable accuracy of the position control loop. The length of the pilot air lines should therefore be selected as short as possible.

Product properties	
Actual position signal	Digital (RS485)
Detection range of the sensor	3...45 mm (stroke range of valve spindle)
Electrical data	
Operating voltage	24 V DC ± 25 %, UL: NEC Class 2
Protection class	III according to DIN EN 61140
Power consumption	< 0.3 W
Electrical connection	
Cable bushing	1x M16 × 1.5 (cable Ø 5...10 mm) on screw-type terminals (0.14...1.5 mm²)
Connection cable length	10 m
Approvals and conformities	
Protection class	IP65/IP67 according to EN 60529, 4X according to NEMA 250 standard
Explosion protection	
Ignition protection class	II 3G Ex ec IIC T4 Gc II 3D Ex tc IIIC T135 °C Dc
Further information can be found in chapter "2.5. Explosion protection" on page 9.	
North America (USA/Canada)	
UL Recognized for the USA and Canada	cULus certificate: 238179
FM Explosion Protection	Increased Safety for Class I, Zone 2, AEx ec IIC T4 Gc hazardous (classified) locations, indoors and outdoors (IP54). Alternatively marked as Class I Division 2 Groups A, B, C, and D; T4.
Further information can be found in chapter "2.6. North America (USA/Canada)" on page 10.	
Others	
China Compulsory Certification (CCC)	The products with Ex approval are suitable for import and use for hazardous applications in China. Further information can be found in chapter "2.7. Others" on page 10.
Further information can be found in chapter "2. Approvals and conformities" on page 9.	
Environment and installation	
Ambient temperature	- 25 °C...+ 80 °C

DTS 1000120587 EN Version: A Status: RL (released | freigegeben | valide) printed: 28.10.2026

1.3. Rotary remote position sensor (NAMUR)

Note:
When the positioner is mounted separately from the actuator, the length of the pneumatic pilot air lines influences the dynamics and achievable accuracy of the position control loop. The length of the pilot air lines should therefore be selected as short as possible.

Product properties	
Stroke range when mounted to linear actuator	3...130 mm, depending on the lever of the attachment kit
Actual position signal	Digital (RS485)
Measuring range	Rotation angle: 30°...180°
Electrical data	
Operating voltage	10...30 V DC
Protection class	III according to DIN EN 61140
Power consumption	< 0.8 W
Electrical connection	2 m round cable (shielded)
Approvals and conformities	
Protection class	IP65 according to EN 60529
North America (USA/Canada)	
UL Recognized for the USA and Canada	cULus certificate: E226909 Further information can be found in chapter "2.6. North America (USA/Canada)" on page 10.
Further information can be found in chapter "2. Approvals and conformities" on page 9.	
Environment and installation	
Ambient temperature	- 25 °C...+ 80 °C

1.4. Position feedback unit with proximity switches (accessories for retrofitting)

Note:
The feedback unit possesses 2 proximity switches that can be adjusted independently of each other via switch flags.

Product properties	
Output function	3-wire, normally open contact, PNP
Electrical data	
Electrical connection	M12, 4-pin
Operating voltage	10...30 V DC
Protection class	III according to DIN EN 61140
DC-rated current	≤ 100 mA
Residual ripple	≤ 10 %
Approvals and conformities	
Degree of protection	IP65/IP67 according to EN 60529
Further information can be found in chapter "2. Approvals and conformities" on page 9.	

DTS 1000120587 EN Version: A Status: RL (released | freigegeben | valide) printed: 28.10.2026

1.5. Booster

Product properties	
Dimensions	Further information can be found in chapter "3. Dimensions" on page 11.
Material	
Housing	Anodised aluminium
Seal	EPDM, NBR, FKM, POM
Electrical data	
Operating voltage	24 V DC ± 10 %, internally supplied by SideCONTROL Type 8792/Type 8793
Power consumption	< 4 W
Protection class	III according to DIN EN 61140
Electrical connection	
Multipole variant	Connection cable with M8, 4-pin plug and 2x cable plug Type 2516
Fieldbus devices	Additional adapter cable with M12, 8-pin distributor and M8, 4-pin socket
Pneumatic data	
Supply pressure	3...7 bar [1.) 2.)]
Pilot air port	G ¼ internal thread
Air flow rate	Approx. 1000 l_N/min
Environment and installation	
Ambient temperature	0 °C...+ 55 °C
Degree of protection	IP65 according to EN 60529
Installation	Attachment to the pneumatic connections of Booster.ready SideCONTROL Type 8792/Type 8793

1.) The supply pressure has to be 0.5...1 bar above the minimum required pilot pressure for the valve actuator.
2.) Pressure data: overpressure to atmospheric pressure

DTS 1000120587 EN Version: A Status: RL (released | freigegeben | valide) printed: 28.10.2026

2. Approvals and conformities

2.1. General notes

- The approvals and conformities listed below must be stated when making enquiries. This is the only way to ensure that the product complies with all required specifications.
- Not all available variants can be supplied with the approvals or conformities indicated below.

2.2. Conformity

In accordance with the EU Declaration of Conformity, the product is compliant with the EU directives.

2.3. Standards

The applied standards which are used to demonstrate compliance with the EU directives are listed in the EU-Type Examination Certificate and/or the EU Declaration of Conformity.

2.4. Functional Safety

Positioner SideCONTROL Type 8792

The device has been assessed by exida according to IEC 61508.

- Hardware architectural constraints SIL AC 2 according to IEC 61508 - 2 support use in SIF applications up to SIL 2 at HFT = 0 and up to SIL 3 at HFT = 1, subject to the overall SIF design, PFD/PFH calculations and systematic capability assessment.
- Safety function: De-energization of the actuator supply causes venting of the pneumatic output
- Use in SIL-rated Safety Instrumented Functions (SIF) requires implementation according to the Safety Manual and FMEDA report.

Further details: exida FMEDA Report Buerkert Q26 - 01 - 122 R001

2.5. Explosion protection

Positioner SideCONTROL Type 8792

Approval	Description
	Optional: Explosion protection **ATEX:** BVS 16 ATEX E 118 X II 3G Ex ec ic IIC T4 Gc II 3D Ex tc IIIC T135 °C Dc **IECEx:** IECEx BVS 16.0091 X Ex ec ic IIC T4 Gc Ex tc IIIC T135 °C Dc

DTS 1000120587 EN Version: A Status: RL (released | freigegeben | valide) printed: 28.10.2026

2.6. North America (USA/Canada)

Positioner SideCONTROL Type 8792

Approval	Description
	**Optional: CSA for Canada and the USA** The products are CSA approved for Canada and the USA according to: • CSA C22.2 No. 139 (Electrically operated valves) • UL 429 (Electrically operated valves)
	**Optional: FM (Factory Mutual) – Explosion Protection** Increased Safety for Class I, Zone 2, AEx ec ic IIC T4 Gc and Zone 22, AEx tc IIIB T135 °C Dc hazardous (classified) locations, indoors and outdoors (IP54). Alternatively marked as Class I Division 2 Groups A, B, C and D; T4 and Class II, III Division 2 Groups F and G; T135 °C. Certificate number: FM25US0304X/FM25CA0107X

Linear remote position sensor (ELEMENT Type 8798)

Approval	Description
	**Optional: UL Listed for the USA and Canada** The products are UL Listed for the USA and Canada according to: • UL 61010-1 (ELECTRICAL EQUIPMENT FOR MEASUREMENT, CONTROL, AND LABORATORY USE – Part 1: General Requirements) • CAN/CSA-C22.2 No. 61010-1
	**Optional: FM (Factory Mutual) – Explosion Protection** Increased Safety for Class I, Zone 2, AEx ec IIC T4 Gc hazardous (classified) locations, indoors and outdoors (IP54). Alternatively marked as Class I Division 2 Groups A, B, C, and D; T4. Certificate number: FM21US0106X/FM21CA0073X

Rotary remote position sensor (NAMUR Type 8798)

Approval	Description
	**Optional: UL Listed for the USA and Canada** The products are UL Listed for the USA and Canada according to: Certificate no.: E226909

2.7. Others

China Compulsory Certification (CCC)

Positioner SideCONTROL Type 8792 and linear remote position sensor (ELEMENT Type 8798)

Conformity	Description
	**Optional: China Compulsory Certification (CCC)** The products with Ex approval are suitable for import and use for hazardous applications in China.

DTS 1000120587 EN Version: A Status: RL (released | freigegeben | valide) printed: 28.10.2026

3. Dimensions

3.1. NAMUR variant

Note:
Dimensions in mm, unless otherwise stated

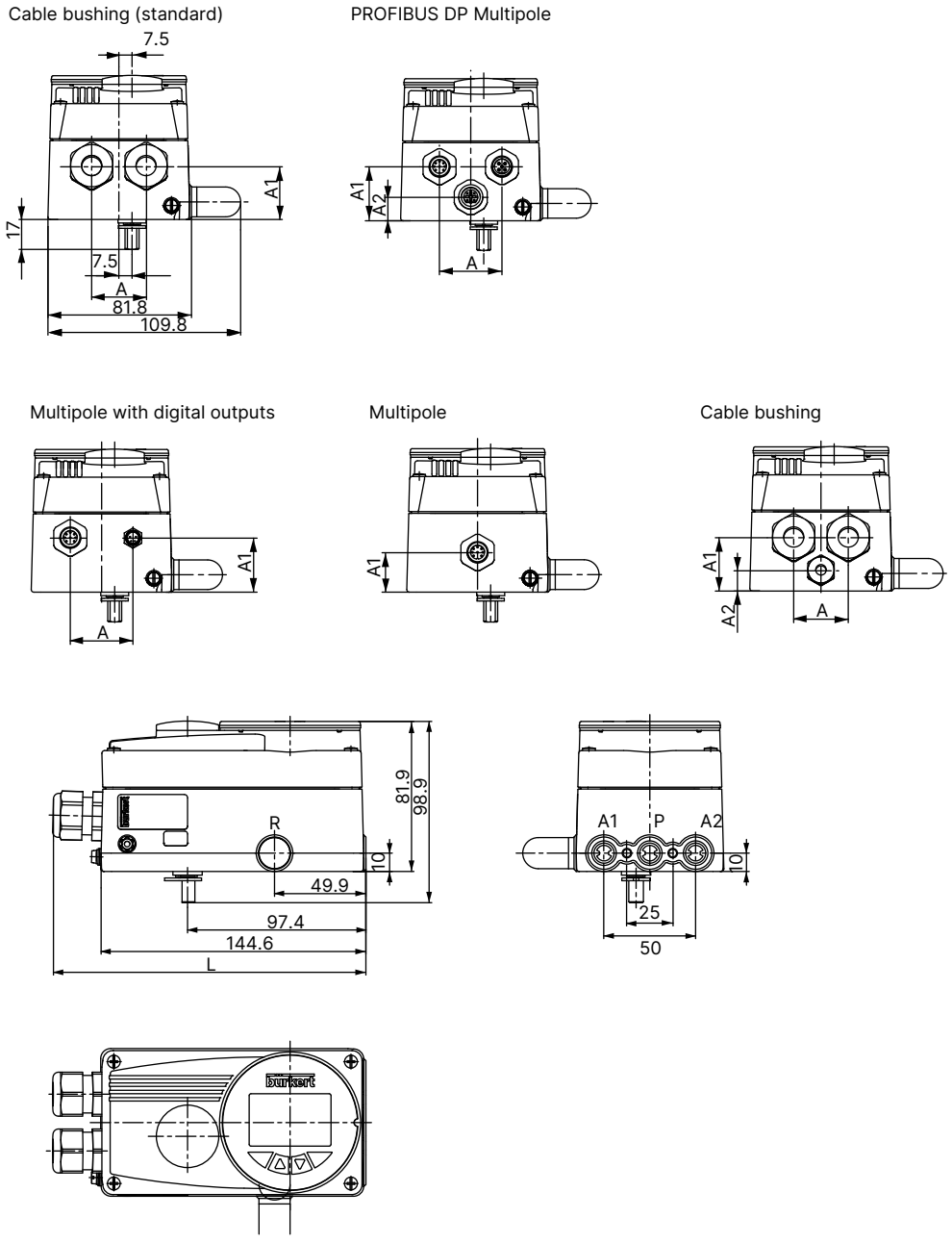

Description	L	A	A1	A2
Standard (cable bushing)	171.1	31	30	–
PROFIBUS DP multipole	157.8	36	31	13.5
Multipole, digital outputs	157.6	36	31	–
Multipole	157.4	–	22.5	–
Remote	171.1	31	30	11.5

DTS 1000120587 EN Version: A Status: RL (released | freigegeben | valide) printed: 28.10.2026

NAMUR variant with booster

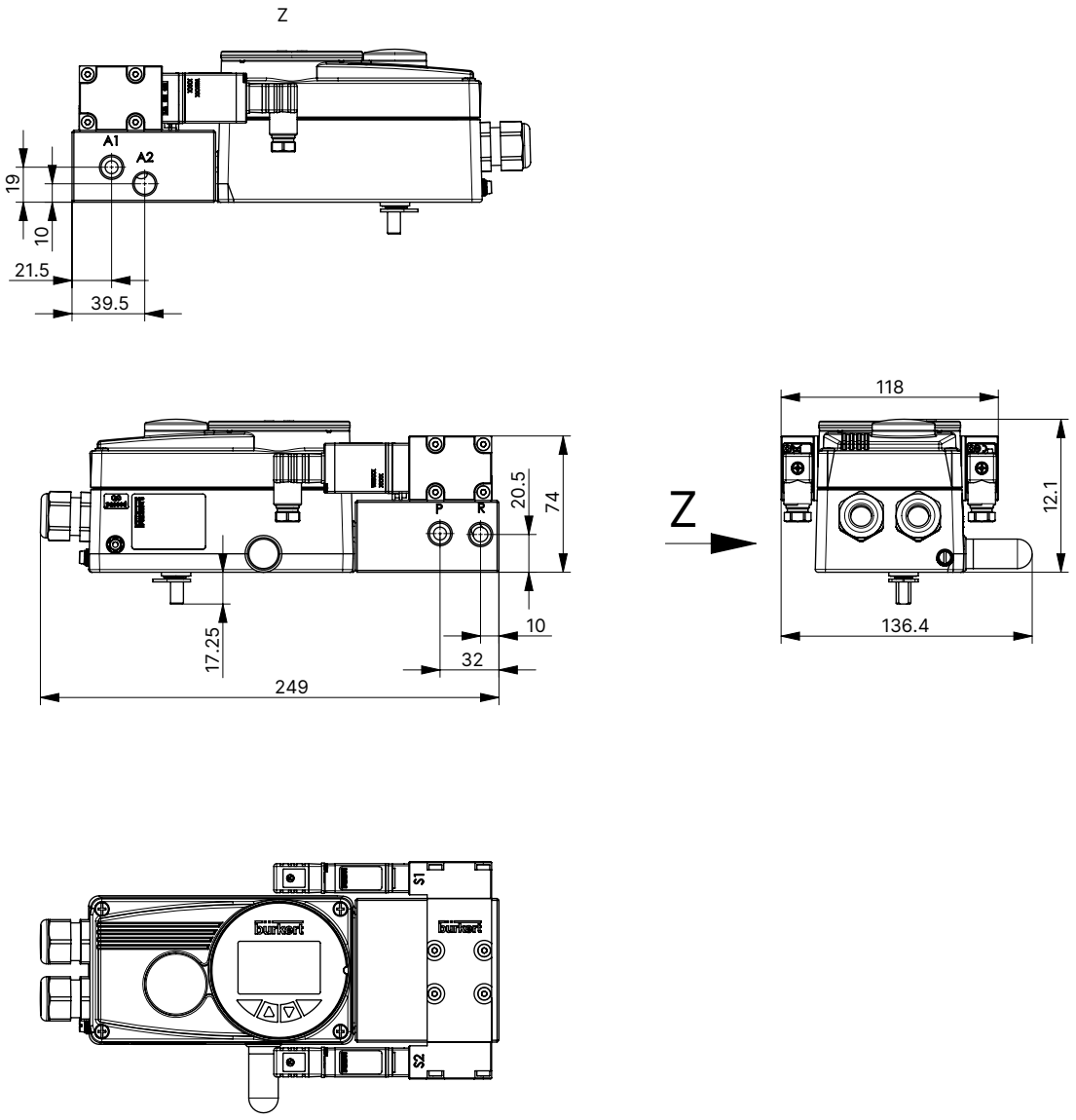

DTS 1000120587 EN Version: A Status: RL (released | freigegeben | valide) printed: 28.10.2026

3.2. Remote variant

Note:
Dimensions in mm, unless otherwise stated

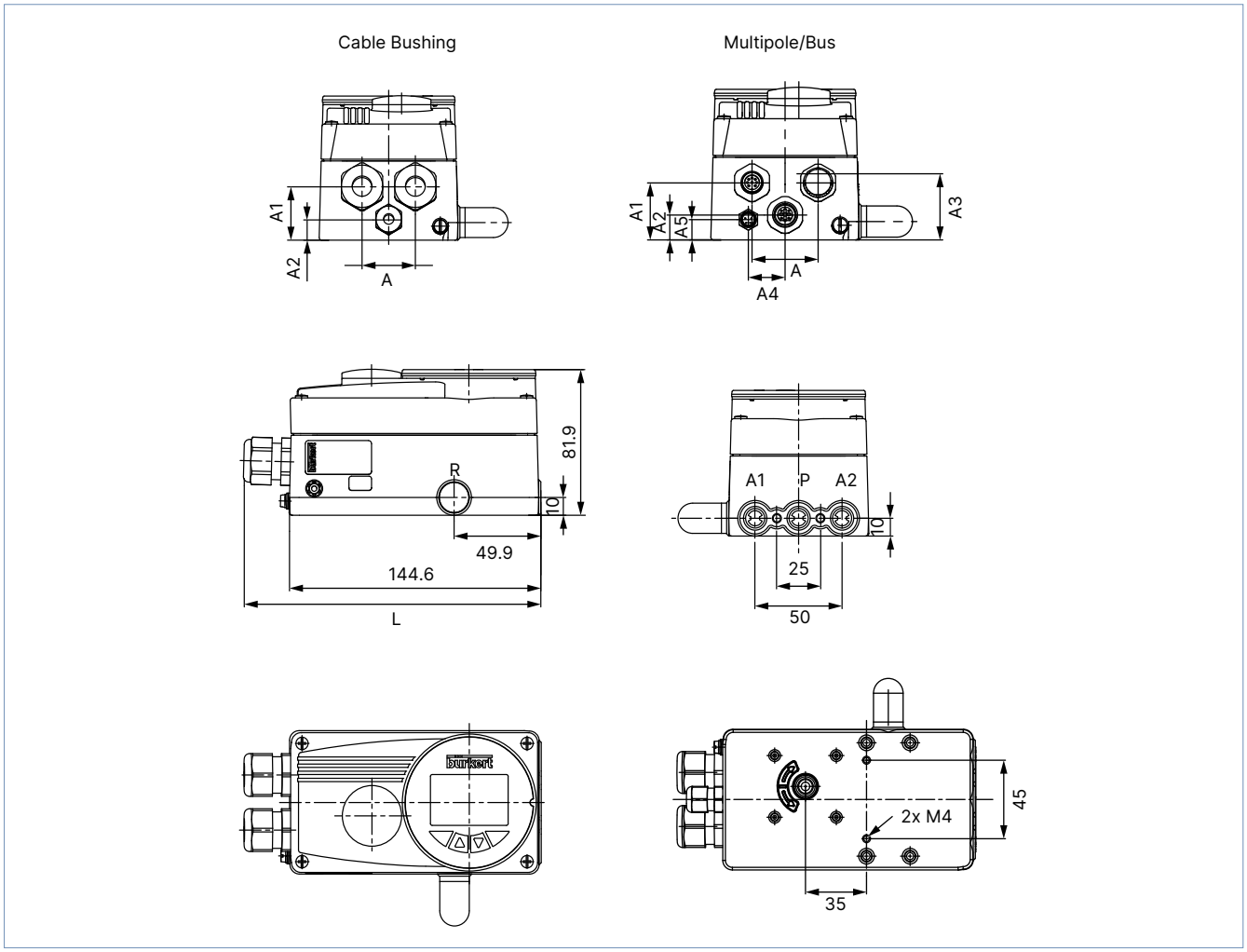

Description	L	A	A1	A2	A3	A4	A5
Remote cable bushing	171.1	31	30	11.5	–	–	–
Remote multipole/bus	157.8	36	31	13.5	36	20	11

DTS 1000120587 EN Version: A Status: RL (released | freigegeben | valide) printed: 28.10.2026

DTS 1000120587 EN Version: A Status: RL (released | freigegeben | valide) printed: 28.10.2026

3.3. Mounting specification of NAMUR/remote variant

Note:

- Dimensions in mm, unless otherwise stated
- The rotary motion of the sensor shaft must be within a range of max. 180°. 1.)
- The sensor shaft must be in this position at approx. 50 % valve opening.

NAMUR variant

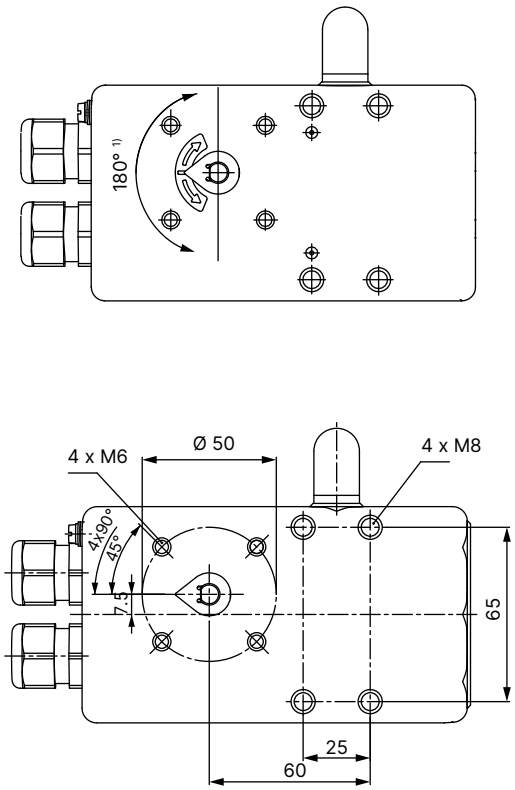

1.) With PROFIBUS a maximum of 150° is possible, with the other variants a maximum of 180°..

Remote variant

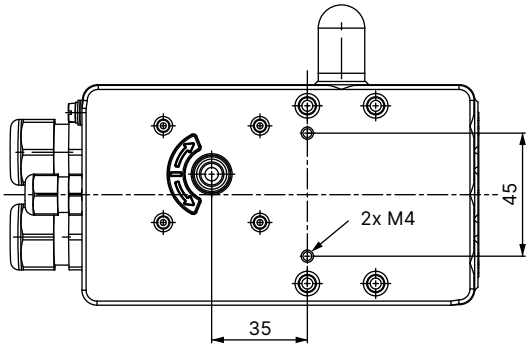

3.4. ATEX/IECEx variant

Note:
Dimensions in mm, unless otherwise stated

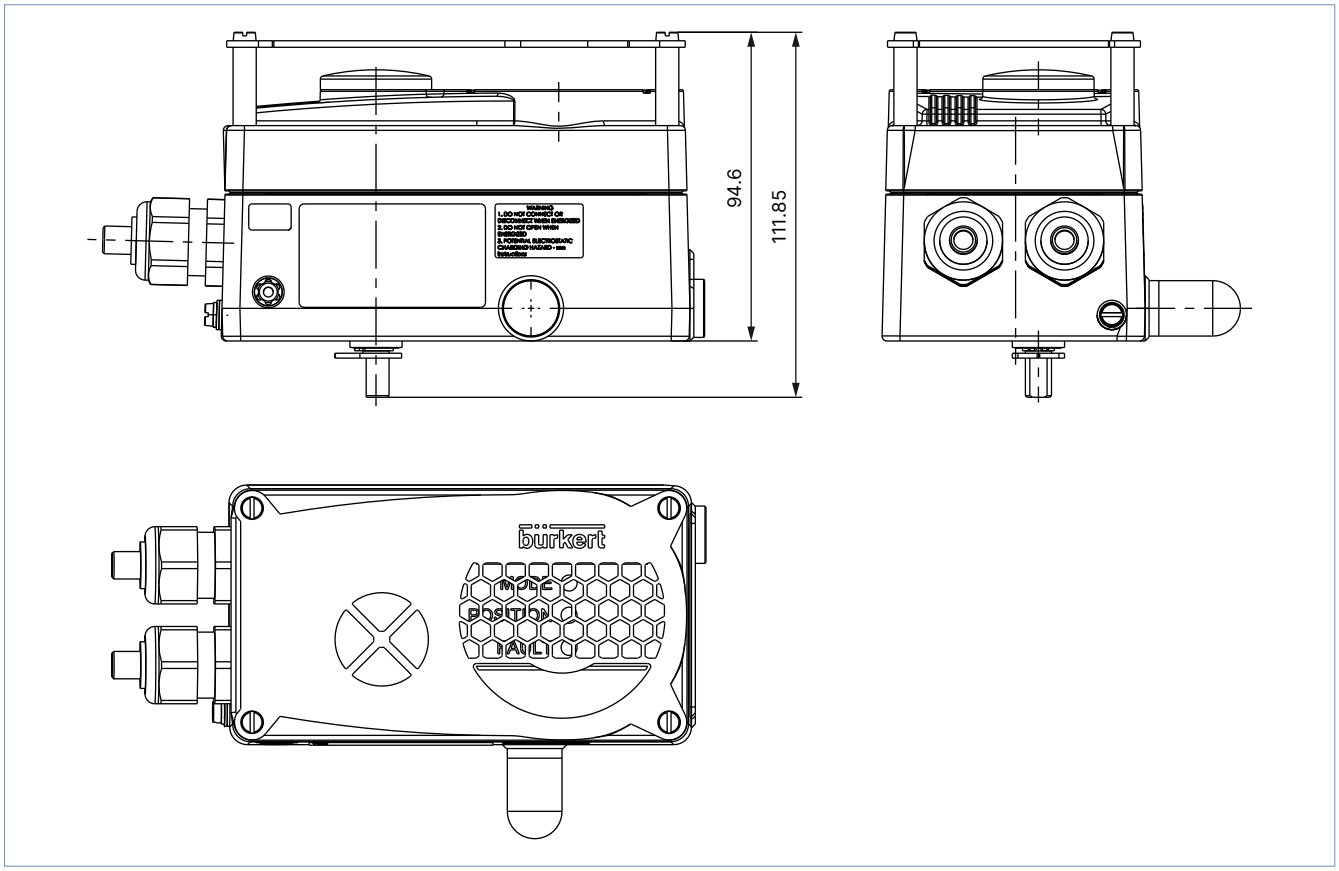

3.5. Remote position sensor variant

Note:
Dimensions in mm, unless otherwise stated

Linear position sensor **Type 8798** ▶ for valve position detection of ELEMENT valves and hygienic process valves for the remote positioner SideCONTROL.

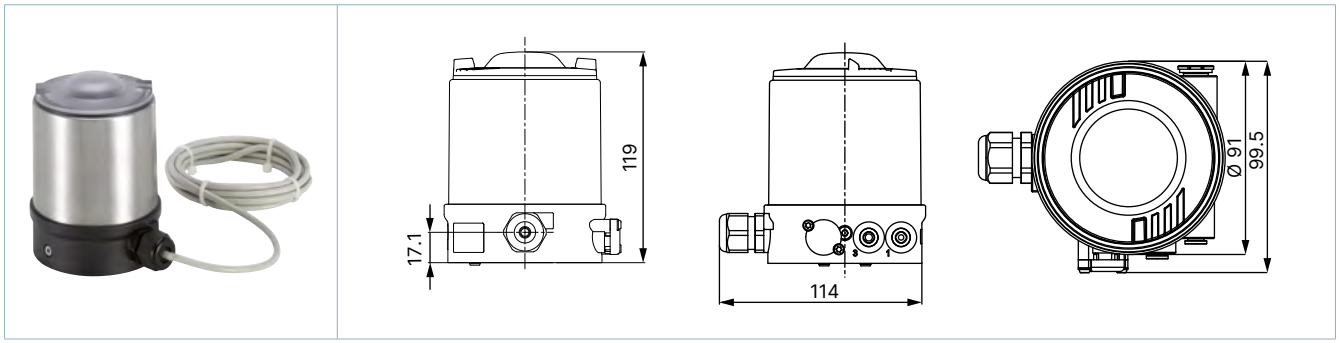

DTS 1000120587 EN Version: A Status: RL (released | freigegeben | valide) printed: 28.10.2026

3.6. Mounting on control valves according to NAMUR

Note:
Dimensions in mm, unless otherwise stated

Rotary position sensor to detect rotary motion of quarter-turn actuators according to NAMUR/IEC 60534 - 6 - 1 and VDI/VDE 3845 (IEC 60534 - 6 - 2) for the remote positioner SideCONTROL.



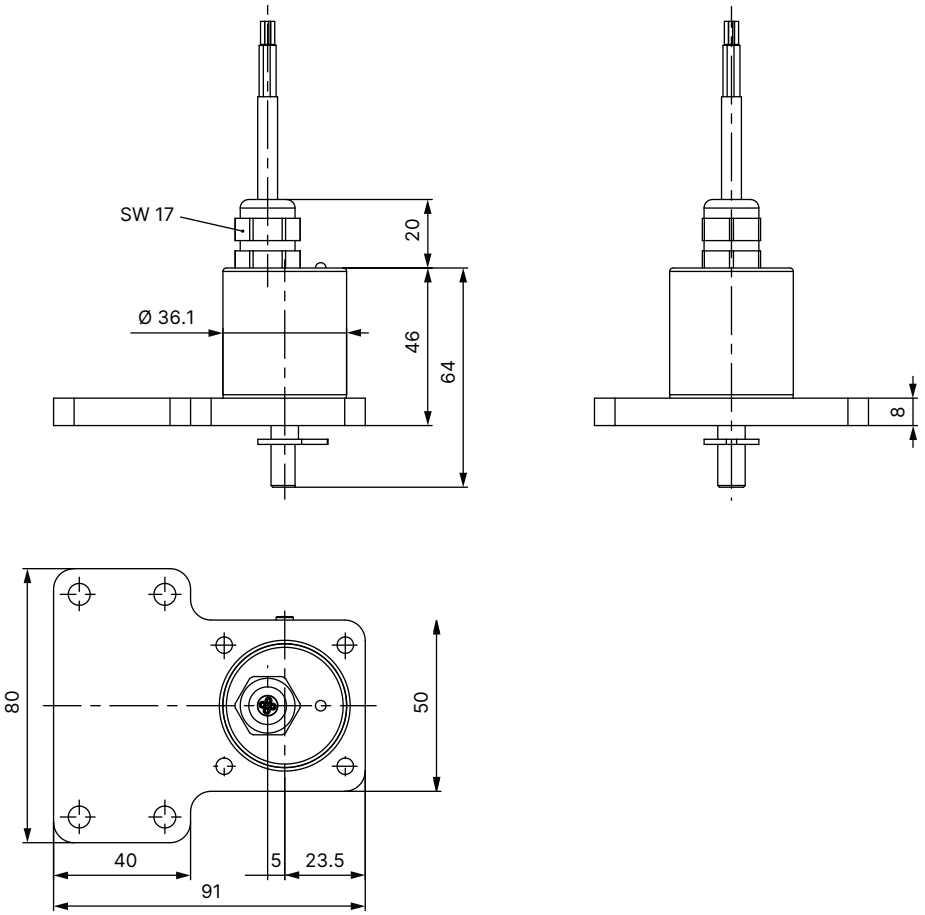

DTS 1000120587 EN Version: A Status: RL (released | freigegeben | valide) printed: 28.10.2026

4. Product connections

4.1. Electrical connection

Multipole connection

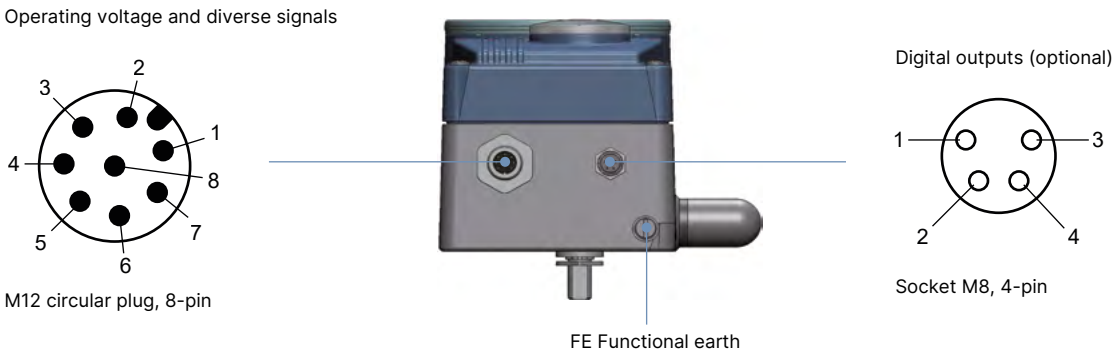

M12 circular plug, 8-pin (set-point)

Pin	Pin assignment	External circuit/signal level		
1	Set-poin value + (0/4...20 mA or 0...5/10 V)	1		+ (0/4...20 mA or 0...5/10 V), completely galvanically isolated
2	Set-point value GND	2		GND
3	GND	3		24 V DC ± 10 %, max. residual ripple 10 %
4	+ 24 V	4		
5	Digital input +	5		+ 0...5 V (log „0“) 10...30 V (log „1“)
6	Digital input GND	6		GND
Analogue feedback option				
8	Analogue feedback +	8		+ (0/4...20 mA or 0...5/10 V), completely galvanically isolated
7	Analogue feedback GND	7		GND

M8 socket, 4-pin (only for digital outputs options)

Pin	Pin assignment	External circuit/signal level		
1	Digital output 1	1		24 V/0 V, NC/NO Relative to operating voltage GND (GND terminal)
2	Digital output 2	2		24 V/0 V, NC/NO Relative to operating voltage GND (GND terminal)
3	Digital output GND	3		GND

DTS 1000120587 EN Version: A Status: RL (released | freigegeben | valide) printed: 28.10.2026

Feedback unit with proximity switches

Note:
Accessories for retrofitting

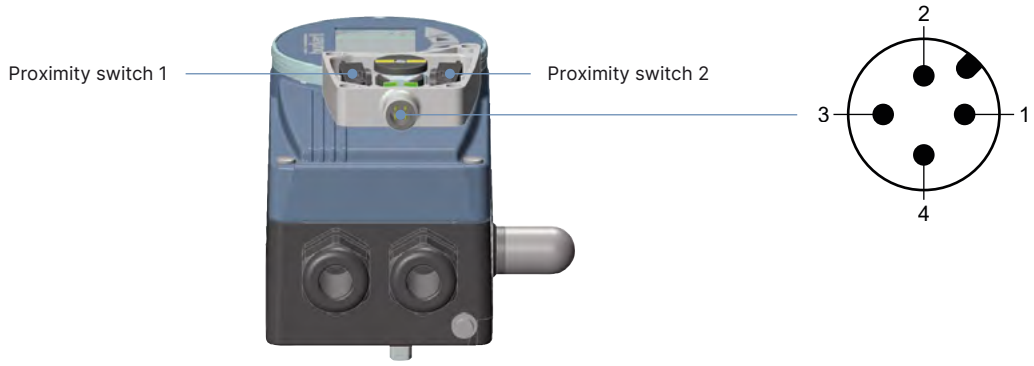

No.	Pin assignment	External circuit/signal level		
1	Supply 10...30 V	+ 10...30 V		10...30 V
2	Switching output (NO) proximity switch 1	+ 10...30 V		Open/10...30 V
3	GND	GND		GND
4	Switching output (NO) proximity switch 2	+ 10...30 V		Open/10...30 V

Screw terminal connection

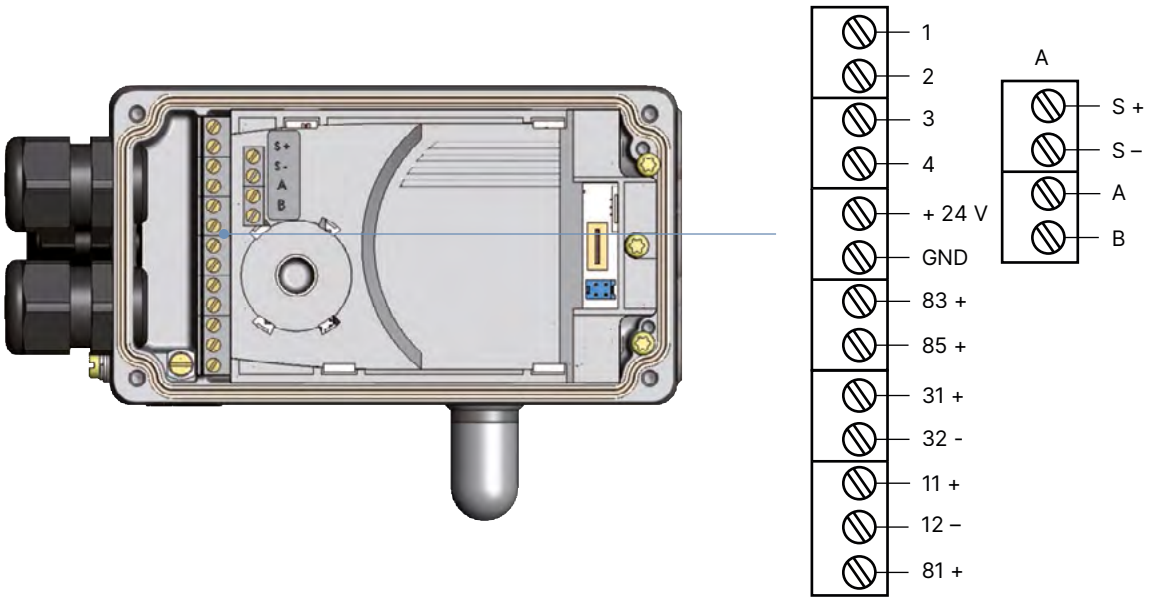

Terminal	Pin assignment	External circuit/signal level		
11 +	Set-point value +	11 +		+ (0/4...20 mA or 0...5/10 V), completely galvanically isolated
12 -	Set-point value GND	12 -		GND
81 +	Digital input +	81 +		+  0...5 V (log. "0") 10...30 V (log. "1") Relative to operating voltage GND (GND terminal)
+ 24 V GND	Operating voltage + Operating voltage GND	+ 24 V GND	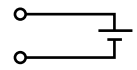	24 V DC ± 10 % Maximum residual ripple 10 %

DTS 1000120587 EN Version: A Status: RL (released | freigegeben | valide) printed: 28.10.2026

Analogue feedback option/digital outputs

Terminal	Pin assignment	External circuit/signal level		
83 +	Digital outputs 1	83 +	○———	24 V/0 V, NC/NO Relative to operating voltage GND (GND terminal)
85 +	Digital outputs 2	85 +	○———	24 V/0 V, NC/NO Relative to operating voltage GND (GND terminal)
31 +	Analogue feedback +	31 +	○——▶	+ (0/4...20 mA or 0...5/10 V) Completely galvanically isolated
32 -	Analogue feedback GND	32 -	○——▶	GND analogue feedback

Remote variant option in conjunction with remote position sensor Type 8798

Note:
For variants without remote variant: Terminals A, B, S + and S - are not connected

Terminal		Pin assignment	External circuit/signal level			
Remote position sensor	A	Serial interface, A-line	A	○———	A-line	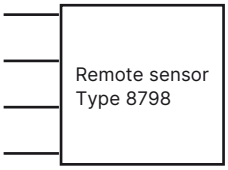
	B	Serial interface, B-line	B	○———	B-line	
	S +	Sensor supply +	S +	○———	+	
	S -	Sensor supply -	S -	○———	-	

Remote position sensor Type 8798

Terminal	Wire colour for cable type		Pin assignment	External circuit		
	1	2				
1	White	Black	Sensor supply -	1	○———	Type 8791 or
2	Brown		Sensor supply +	2	○———	Type 8792/ Type 8793
3	Yellow	Orange	Serial interface, B-line	3	○——▶	Type 8791 or
4	Green	Red	Serial interface, A-line	4	○——▶	Type 8792/ Type 8793

PROFIBUS DP connection

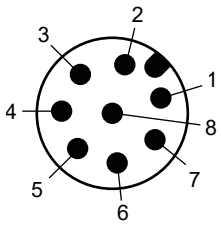

M12 circular plug, 8-pin

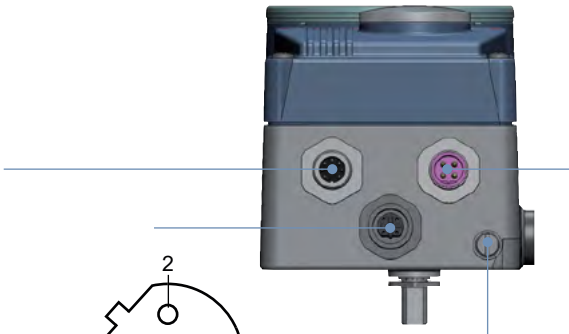

FE Functional earth

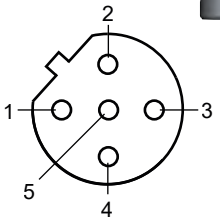

M12 socket, 5-pin
(B-coded, PROFIBUS DP)

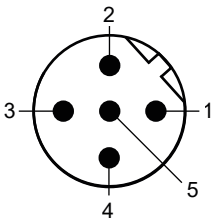

M12 circular plug, 5-pin
(B-coded, PROFIBUS DP)

DTS 1000120587 EN Version: A Status: RL (released | freigegeben | valide) printed: 28.10.2026

Operating voltage, M12 circular plug, 8-pin

Pin	Pin assignment	External circuit/signal level		
1	Not assigned			
2	Not assigned			
3	GND	3	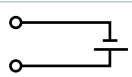	24 V DC ± 10 %
4	+ 24 V	4		Maximum residual ripple 10 %
5	Digital input +			
6	Digital input -			
7	Digital output 1 (relative to pin 3)			
8	Digital output 2 (relative to pin 3)			

Fieldbus connection, M12 socket/circular plug, 5-pin

Pin	Pin assignment	External circuit/signal level
1	VP+ 5	Terminating resistor supply
2	RxD/TxD-N	Receive/transmit data -N, A-line
3	DGND	Information transfer potential (measured to 5 V)
4	RxD/TxD-P	Receive/transmit data -P, B-line
5	Shield	Shielding/protective earth

EtherNet/IP, PROFINET, Modbus TCP connection

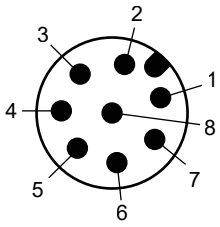

M12 circular plug 8-pin



FE Functional earth

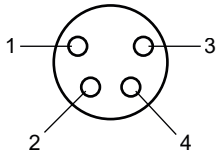

M8 socket, 4-pin, optional
(only with remote variant)

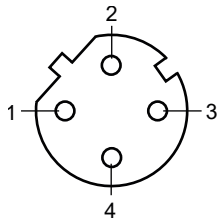

Fieldbus connection for Ethernet, M12 socket, 4-pin, D-coded (2 Port Ethernet Switch)

Fieldbus connection for Ethernet, M12 socket, 4-pin, D-coded

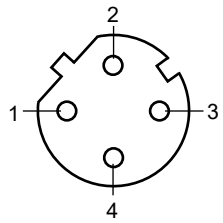

Pin	Description
1	Transmit +
2	Receive +
3	Transmit -
4	Receive -

DTS 1000120587 EN Version: A Status: RL (released | freigegeben | valide) printed: 28.10.2026

Operating voltage, M12 circular plug, 8-pin

Pin	Pin assignment	Device side		External circuit/signal level
1	Not assigned			
2	Not assigned			
Operating voltage				
3	GND	**3**	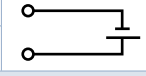	24 V DC ± 10 %, maximum residual ripple 10 %
4	+ 24 V	**4**		
Input signal of the control centre (e. g. SPS)				
5	Digital input +	**5**		 0...5 V (log. "0") 10...30 V (log. "1")
6	Digital input -	**6**		GND (identical to pin 3)
Output signal to the control centre (e. g. SPS) - (only used with digital output option)				
7	Digital output 1 (relative to pin 3)	**7**		0...24 V
8	Digital output 2 (relative to pin 3)	**8**		0...24 V

Connection of digital remote position sensor Type 8798, M8 socket, 4-pin (optional)

Pin	Pin assignment	Device side		External circuit	
1	Sensor supply +	S +		+	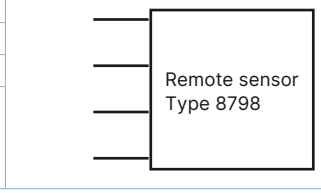
2	Sensor supply -	S -	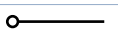	-	
3	Serial interface, A-line	A		A-line	
4	Serial interface, B-line	B		B-line	

Bürkert system bus (büS) connection

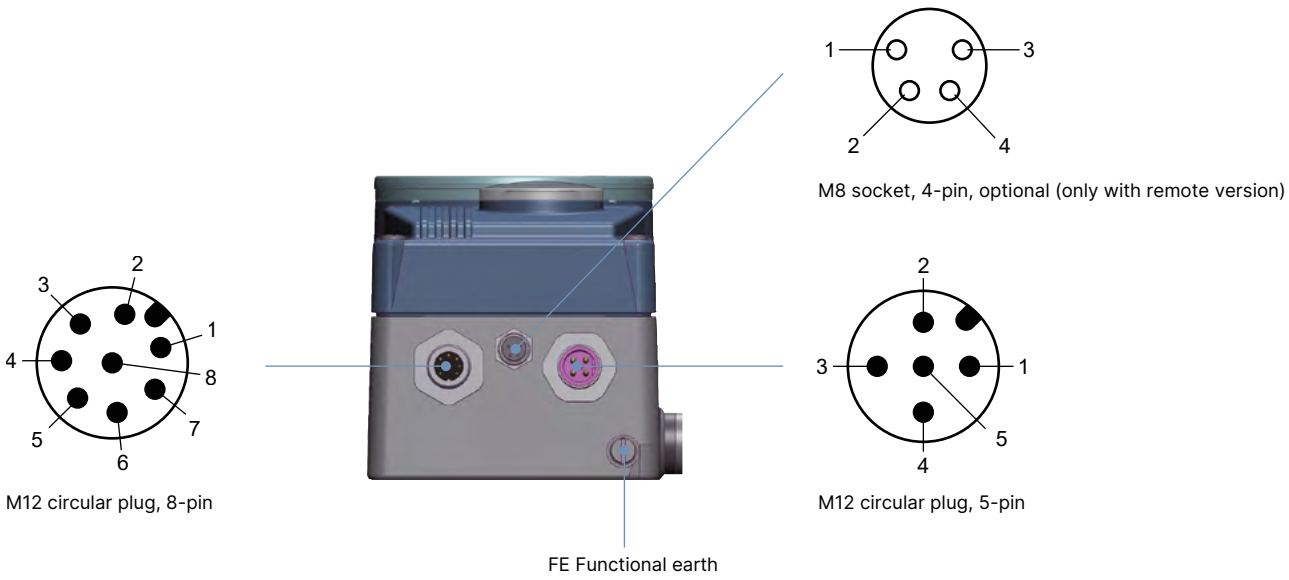

Fieldbus connection, screw-type terminals M12 × 1, 5-pin

Pin	Wire colour	Description
1	–	CAN shielding
2	Not assigned	
3	Black	GND/CAN_GND
4	White	CAN_H
5	Blue	CAN_L

DTS 1000120587 EN Version: A Status: RL (released | freigegeben | valide) printed: 28.10.2026

Operating voltage, circular plug M12, 8-pin

Pin	Pin assignment	Device side		External circuit/signal level
1	Not assigned			
2	Not assigned			
Operating voltage				
3	GND	3	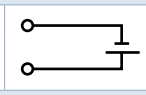	24 V DC ± 10 %
4	+ 24 V	4		Maximum residual ripple 10 %
Input signal of the control centre (e. g. SPS)				
5	Digital input +	5	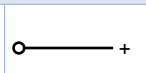	 0...5 V (log „0“) 10...30 V (log „1“)
6	Digital input -	6		GND (identical to pin 3)
Output signal to the control centre (e. g. SPS) (only used with digital output option)				
7	Digital output 1 (relative to pin 3)	7		0...24 V
8	Digital output 2 (relative to pin 3)	8		0...24 V

Connection of digital remote position sensor Type 8798, M8 socket, 4-pin (optional)

Pin	Pin assignment	Device side		External circuit	
1	Sensor supply +	S +		+	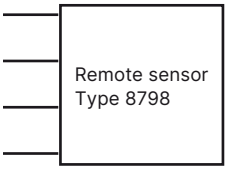 Remote sensor Type 8798
2	Sensor supply -	S -	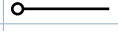	-	
3	Serial interface, A-line	A		A-line	
4	Serial interface, B-line	B	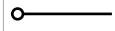	B-line	

Connection of analogue remote position sensor, M8 socket, 4-pin (optional)

Pin	Pin assignment	Device side	External circuit
1	Potentiometer 1	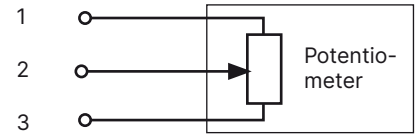 1 2 3	Potentio-meter
2	Wiper 2		
3	Potentiometer 3		
4	Not assigned		

DTS 1000120587 EN Version: A Status: RL (released | freigegeben | valide) printed: 28.10.2026

5. Performance specifications

5.1. Signal flow diagram

Position control loop

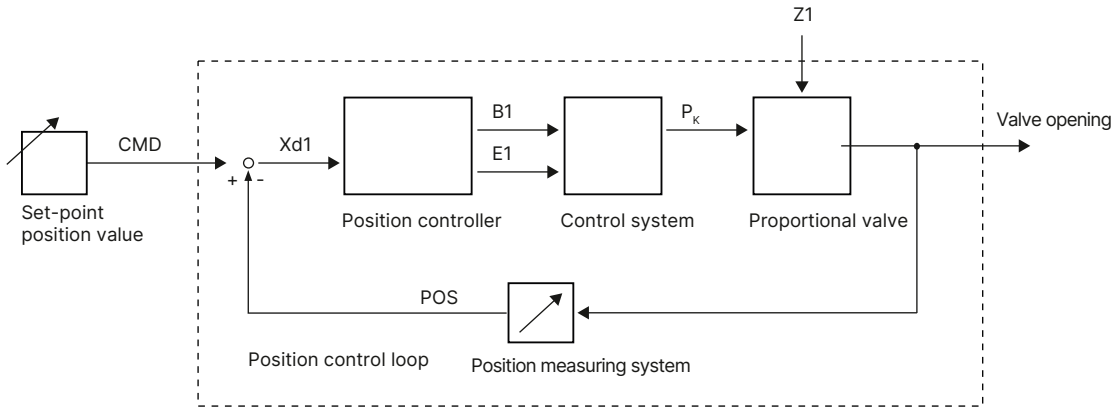

Additional software options of positioner SideCONTROL Type 8792 (extract)

- Automatic commissioning of the control system
- Automatic or manual characteristic curves selection
- Setting of seal and maximum stroke threshold, respectively
- Parameterisation of the positioner
- Limitation of stroke range
- Limitation of manipulating speed
- Setting of the direction of movement
- Configuration of digital input
- Signal split range across various controllers
- Configuration of analogue or 2 digital outputs
- Signal fault detection
- Safety position
- Code protection
- Contrast inversion of display
- Parameterisable diagnostic functions [1.]/digital outputs (option)
  - Operating time counter
  - Path accumulator
  - Position monitoring
  - Graphical display of dwell time frequency and movement range
  - Monitoring of mechanical end positions in armature

1.) Further diagnostic functions with detailed description can be found in the **operating Instructions Type 8792 ▶**.

DTS 1000120587 EN Version: A Status: RL (released | freigegeben | valide) printed: 28.10.2026

5.2. Interface diagram

Variant without fieldbus communication

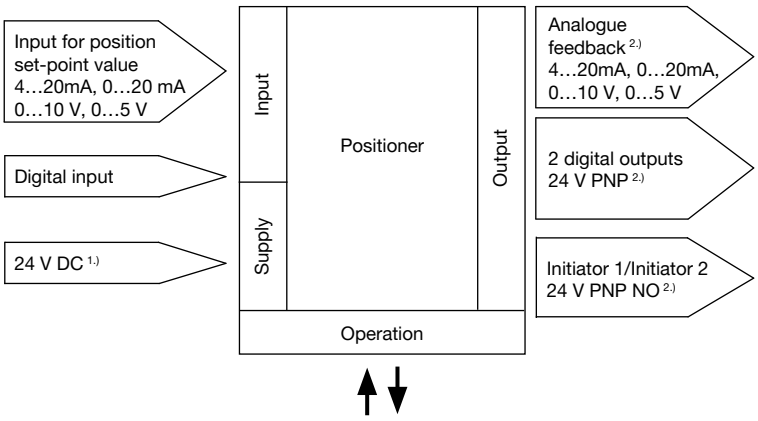

Variant with fieldbus communication

PROFIBUS DP, EtherNet/IP, PROFINET, Modbus TCP and Bürkert system bus (büS)

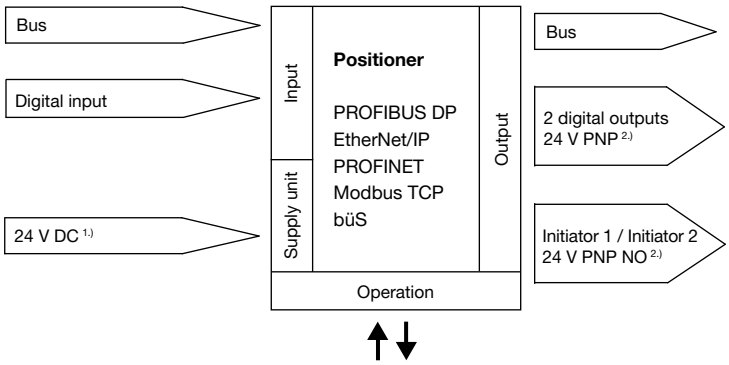

1.) Operating voltage is supplied with a 3-wire unit independent from the set-point signal.
2.) Alternative options

DTS 1000120587 EN Version: A Status: RL (released | freigegeben | valide) printed: 28.10.2026

DTS 1000120587 EN Version: A Status: RL (released | freigegeben | valide) printed: 28.10.2026

6. Product installation

6.1. Mounting options

NAMUR variant

Note:
Positioner with integrated position sensor, installation according to NAMUR/IEC 60534 - 6 - 1 and VDI/VDE 3845 (IEC 60534 - 6 - 2)

The NAMUR variant of the Positioner SideCONTROL is equipped with an integrated position sensor (linear or rotary). It has a standardised interface for direct attachment to linear actuators according to NAMUR/IEC 60534 - 6 - 1 and VDI/VDE 3845 (IEC 605334 - 6 - 2).

Linear actuators	Quarter-turn actuators
See **operating instructions Type 8792** ▶	See **operating instructions Type 8792** ▶
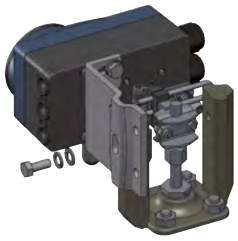	

Description	Article no.
Attachment kit for linear actuators according to IEC 60534 - 6 - 1	787215

Description	Article no.
Attachment kit for stainless steel quarter-turn actuators according to VDI/VDE 3845 (IEC 60534 - 6 - 2)	787338
Universal assembly bridge according to VDI/VDE 3845 (IEC60534 - 6 - 2) made of stainless steel	770294
Universal assembly bridge according to VDI/VDE 3845 (IEC60534 - 6 - 2) made of stainless steel, black powder-coated	775710

Coupling set for shaft, quarter-turn actuator (Article no. 787338)	Mounting bracket for quarter-turn actuator (Article no. 770294/775710)
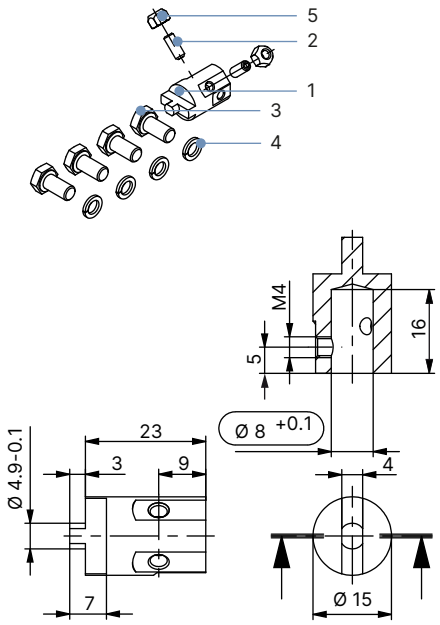	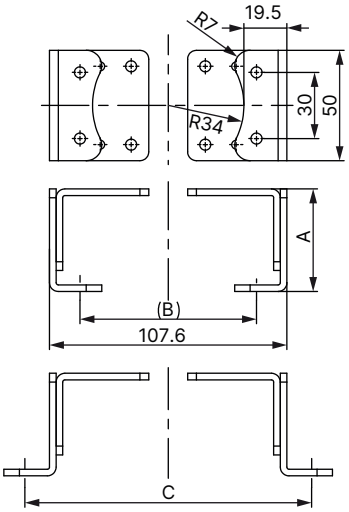

Actuator shaft height [mm]	A [mm]	B [mm]	C [mm]
20	46.5	80	–
30	56.5	80	130
50	76.5	–	130

Remote variant

Note:

- Dimensions in mm, unless otherwise stated
- 2 mounting options

The positioner SideCONTROL remote variant is used to control process control valves in combination with a remote position sensor. The remote position sensor is mounted directly on the valve to detect the valve position. The remote positioner can be mounted on the wall or on a standard rail in a control cabinet.

Wall mounting with accessory bracket





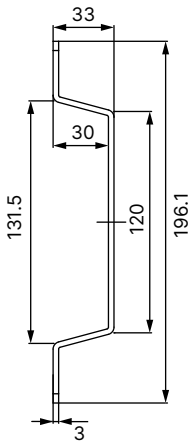

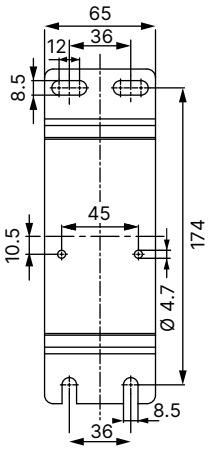

Description	Article no.
Bracket for wall mounting	675715

Standard rail

Note:

- Dimensions in mm, unless otherwise stated
- Adapter can be turned by 90° to the standard rail.

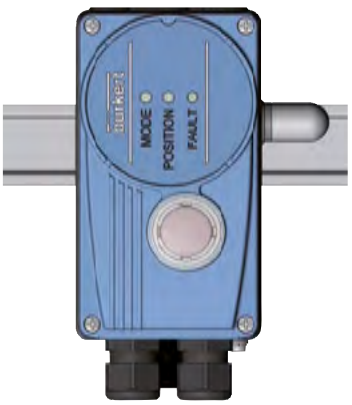

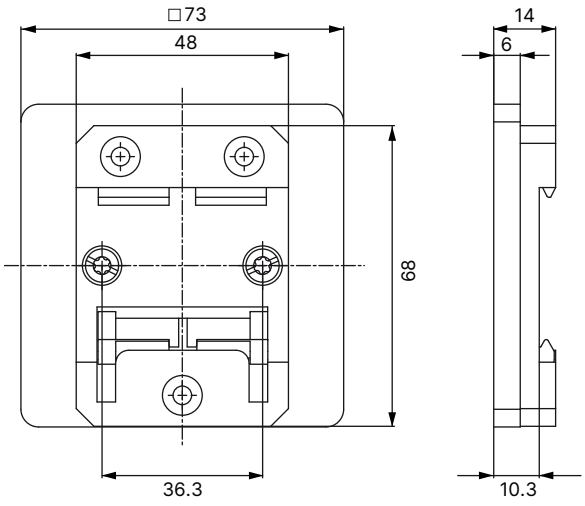

Description	Article no.
Holder for standard rail mounting	675702

Position feedback unit with proximity switches

Note:
For retrofitting on SideCONTROL NAMUR

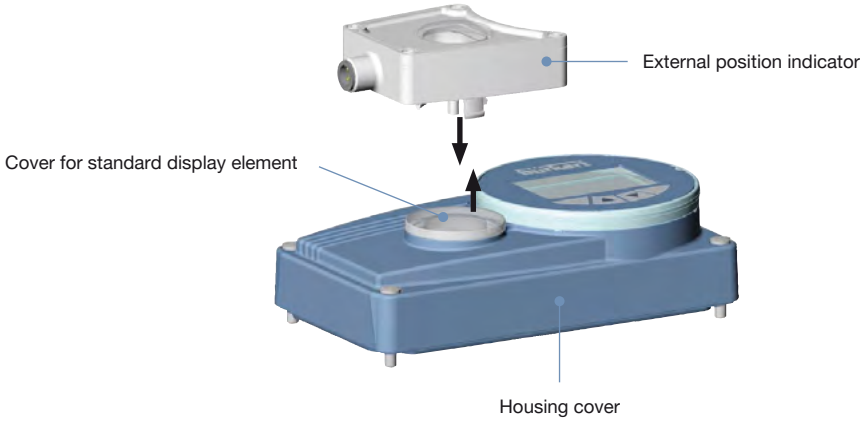

Description	Article no.
Position feedback unit	677218

For retrofitting on Booster.ready

Note:
For retrofitting on Booster.ready variants of SideCONTROL NAMUR



Description	Article no.
Booster for Booster.ready variants Type 8792 and Type 8793	20093020

DTS 1000120587 EN Version: A Status: RL (released | freigegeben | valide) printed: 28.10.2026

6.2. Mounting options

NAMUR variant for Samson valves

Actuator Type 3277

For Samson actuator Type 3277 and a valve with an effective valve stroke of 7.5...30 mm

Product selection
Note:

- The technical data of the listed actuators and valves from third-party manufacturers is subject to change. Sampling of the relevant adapter kit is therefore required in all cases. The information on the combinability of the adapter kits is therefore subject to change.
- The ordering tables for adapter kits in chapter "7.4. Ordering chart accessories" on page 34 refer to the valve actuators from third-party manufacturers and not to the valves themselves.
- The actuator is therefore the decisive factor when selecting a suitable adaptation.

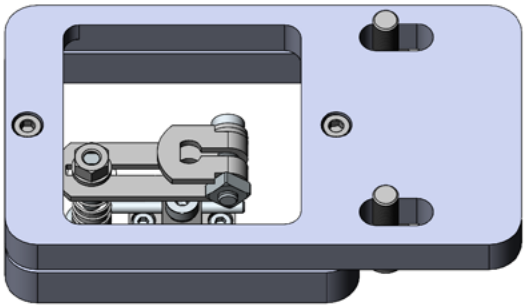

Article no. of adapter kit for Bürkert positioner	
Description	
For Samson Type 3277 – Adapter kit with stainless steel adapter plates for valve stroke 15...30 mm	20068379
For Samson Type 3277 – Adapter kit with plastic adapter plates (black POM) for valve stroke 15...30 mm	20091532
For Samson Type 3277 – Adapter kit with stainless steel adapter plates for valve stroke 7.5 mm	20111009

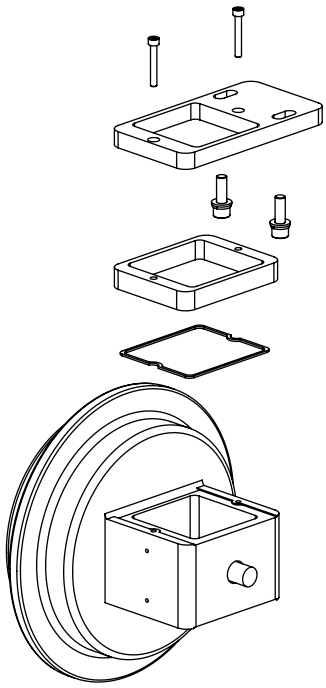

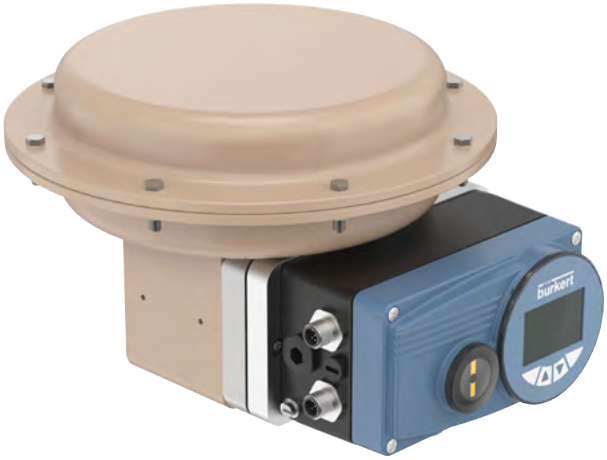

DTS 1000120587 EN Version: A Status: RL (released | freigegeben | valide) printed: 28.10.2026

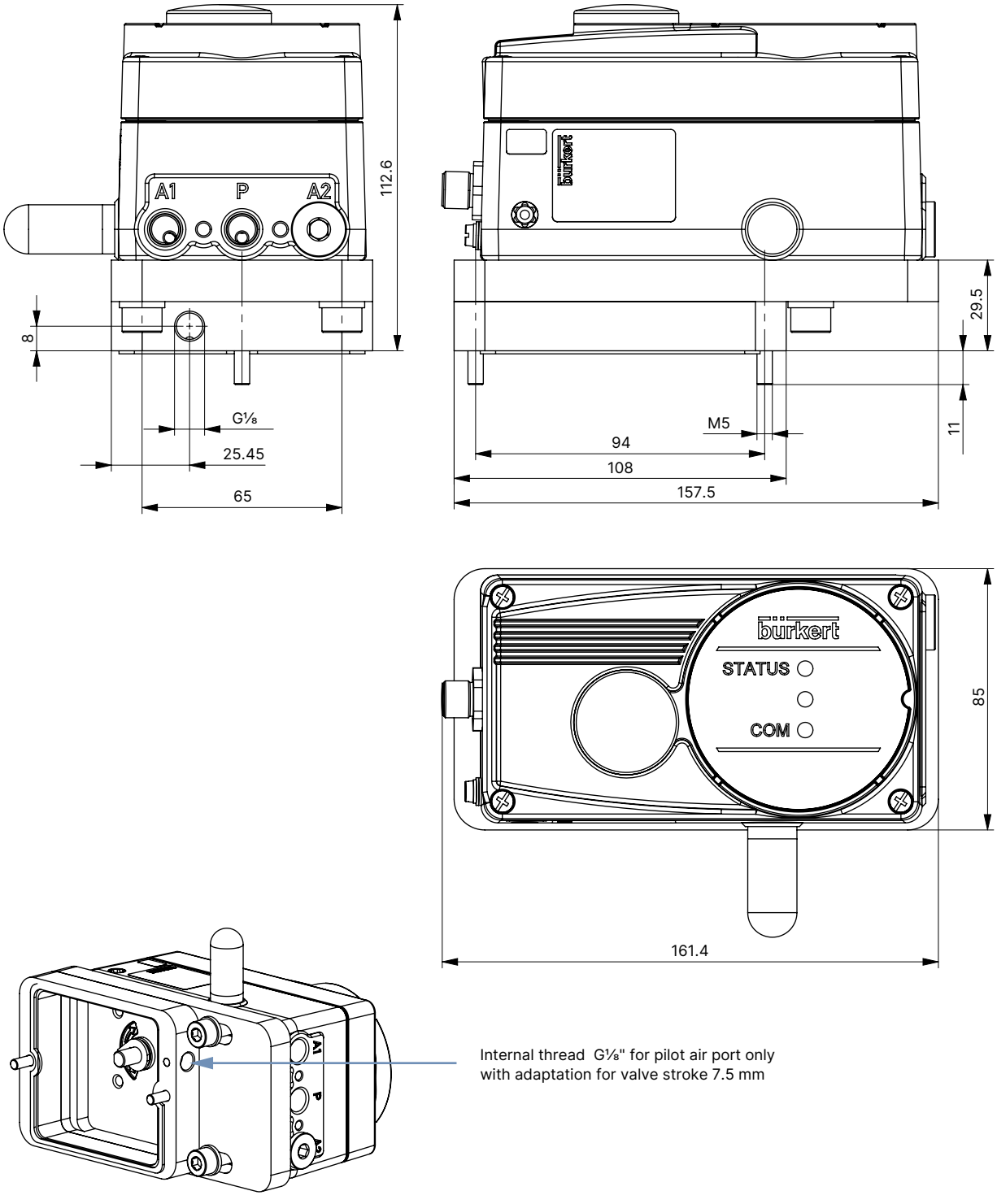

DTS 1000120587 EN Version: A Status: RL (released | freigegeben | valide) printed: 28.10.2026

6.3. Combination options with pneumatic process valves

Note:
Further information can be found in chapter "7.3. Ordering chart" on page 32.

Type 8792			
Positioner SideCONTROL	**NAMUR**	**Remote**	
	 	    	
	Linear actuators IEC 60534-6-1 **Rotary actuators VDI/VDE 3845 (IEC 60534-6-2)**	**Linear actuators IEC 60534-6-1** **Quarter-turn actuators VDI/VDE 3845 (IEC 60534-6-2)**	**Control valve system**
	Type 8805 ▸ **Ball valve/butterfly valve with pneumatic quarter-turn actuator**	**Type 8798 ▸** **Remote sensor for pneumatically operated process valves**	**Type 2300 ▸** **Pneumatically operated 2-way angle seat control valve ELEMENT** **+** **Type 8798 ▸** **Remote sensor for pneumatically operated process valves**
	Special adaptations		
	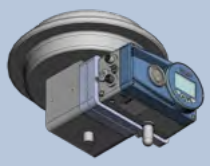		
	For Samson Type 3277 ▸	**For other special actuators on request**	

DTS 1000120587 EN Version: A Status: RL (released | freigegeben | valide) printed: 28.10.2026

7. Ordering information

7.1. Bürkert eShop



Bürkert eShop – Easy ordering and quick delivery

Want to find the Bürkert product or spare part you need quickly and order directly?
Our online shop is available for you 24/7. Sign up and enjoy all the benefits.

Order online now

7.2. Bürkert product filter



Bürkert product filter – Find the right product quickly

Want to select products conveniently based on your technical requirements?
Use the Bürkert product filter and find suitable articles for your application quickly and easily.

Try out our product filter

DTS 1000120587 EN Version: A Status: RL (released | freigegeben | valide) printed: 28.10.2026

7.3. Ordering chart

Positioner SideCONTROL Type 8792 NAMUR variant

Note:

- Mounting according to NAMUR IEC 60534 - 6 - 1 or VDI/VDE 3845 (IEC 60534 - 6 - 2)
- All standard variants are CSA-approved.
- Further variants are available on request.

Communication	Electrical connection	Analogue feedback	2 digital outputs	Booster. ready	Diagnostics [1.]	Article no.		
						Standard / cCSAus	ATEX II cat. 3G/D, IECEx, CCC [2.]	cFMus CL I ZN 2/22 CL I DIV 2 (with ATEX/ IECEx II 3 G/D)
Single and double-acting with universal air flow rate								
Without fieldbus communication	Cable bushing	–	–	–	–	317985	–	–
		–	Yes	–	Yes	317987	318037	–
		Yes	Yes	–	Yes	317986	318036	20142157
	Multipole	–	–	–	–	317988	–	–
		–	Yes	Yes	Yes	317990	–	–
		Yes	Yes	Yes	Yes	317989	–	–
PROFIBUS DP-V1	Multipole	Via bus	–	–	–	206616	–	–
		Via bus	Yes	–	Yes	206617	–	–
EtherNet/IP	Multipole	Via bus	–	–	Yes	317932	317938	–
		Via bus	Yes	Yes [3.]	Yes	317933	–	–
		Via bus	–	–	Yes	–	317939	–
PROFINET	Multipole	Via bus	–	–	Yes	317942	317948	–
		Via bus	Yes	Yes [3.]	Yes	317943	–	–
		Via bus	Yes	–	Yes	–	317949	–
Modbus TCP	Multipole	Via bus	–	–	Yes	317952	317958	–
		Via bus	Yes	Yes [3.]	Yes	317953	–	–
		Via bus	Yes	–	Yes	–	317959	–
Bürkert system bus (büS)	Multipole	Via bus	–	–	Yes	317962	317968	–
		Via bus	Yes	Yes [3.]	Yes	317963	–	–
		Via bus	Yes	–	Yes	–	317969	–

1.) See "Additional software options of positioner SideCONTROL Type 8792 (extract)" on page 23
2.) CCC (China Compulsory Certificate) for device variants with Ex approval
3.) The booster adapter cable for fieldbus devices is required for the connection.

DTS 1000120587 EN Version: A Status: RL (released | freigegeben | valide) printed: 28.10.2026

Positioner SideCONTROL Type 8792, remote variant

Note:
Further variants are available on request.

Communication	Electrical connection	Analogue feedback	2 digital outputs	Diagnostics [1.]	Article no.		
					Standard	ATEX II cat. 3G/D, IECEx, CCC [2.]	cFMus CL I ZN 2/22 CL I DIV 2 (with ATEX/ IECEx II 3 G/D)
Single-acting with low air flow rate for actuator series Type 23xx (Ø 70/90 mm)							
Without fieldbus communication	Cable bushing	–	–	–	318021	370735	–
		–	Yes	Yes	318011	–	–
EtherNet/IP		Yes	Yes	Yes	318010	361651	20156067
PROFINET	Cable bushing	Via bus	Yes	Yes	317936	–	–
Modbus TCP		Via bus	Yes	Yes	317946	–	–
Bürkert system bus (büS)		Via bus	Yes	Yes	317956	–	–
Bürkert-Systembus (büS)		Via bus	Yes	Yes	317966	–	–
Single and double-acting with universal air flow rate for actuator series Type 23xx (Ø 130/225 mm) and 27xx (Ø 175/225 mm)							
Without fieldbus communication	Cable bushing	–	–	–	317991	369401	–
		–	Yes	Yes	317993	–	–
		Yes	Yes	Yes	317992	318038	20144548
EtherNet/IP	Cable bushing	Via bus	Yes	Yes	317935	–	–
PROFINET		Via bus	Yes	Yes	317945	–	–
Modbus TCP		Via bus	Yes	Yes	317955	–	–
Bürkert system bus (büS)		Via bus	Yes	Yes	317965	–	–

1.) See "Additional software options of positioner SideCONTROL Type 8792 (extract)" on page 23
2.) CCC (China Compulsory Certificate) for device variants with Ex approval

Remote position sensor for remote variant of Type 8792 SideCONTROL

Product	Mounting variant	Electrical connection	Article no.		
			Standard / cCSAus	ATEX II cat. 3G/D, IECEx, CCC [1.]	cFMus CL I ZN 2, CL I DIV 2 (with ATEX/ IECEx II 3 G/D)
Mounting on control valves					
Type 8798 ▶ 	Control valve Type 23xx	Cable bushing - 10 m round cable	300730	20003944	20156970
		Multipole - 10 m round cable	307956	–	–
	Control valve Type 27xx	Cable bushing - 10 m round cable	211535	226859	20156968
		Multipole - 10 m round cable	329888	–	–
NAMUR mounting					
	NAMUR (rotary)	Cable bushing 2 m round cable (extendable to 10 m maximum)	211536	–	–

1.) CCC (China Compulsory Certificate) for device variants with Ex approval

7.4. Ordering chart accessories

Standard accessories

Note:
The associated communication software can be downloaded under **Type 8792 ▶**.

Description	Article no.
M12 circular socket with cable, 8-pin, cable length: 5 m, for input and output signals	919267
M8 plug, 4-pin with solder connections can be assembled for remote position sensor or digital outputs	917131
USB büS interface set 2 (Type 8923) for connection to the Bürkert Communicator software: including büS stick, connection cable to M12 plug, M12 connection cable on micro USB for the büS service interface and Y distributor, cable length: 0.7 m	772551
büS cable extension, M12, cable length: 1 m	772404
büS cable extension, M12, cable length: 3 m	772405
büS cable extension, M12, cable length: 5 m	772406
büS cable extension, M12, cable length: 10 m	772407
Silencer G ¼	780780
USB interface for serial communication (for device variants with PROFIBUS)	227093
Bürkert Communicator software	**Type 8920 ▶**

Accessories SideCONTROL NAMUR

Note:
Further information can be found in chapter "6. Product installation" on page 25.

Description	Article no.
Attachment kit for linear actuators according to IEC 60534 - 6 - 1	787215
Attachment kit for stainless steel rotary actuators according to VDI/VDE 3845 (IEC 60534 - 6 - 2)	787338
Universal assembly bridge according to VDI/VDE 3845 (IEC60534 - 6 - 2) made of stainless steel	770294
Universal assembly bridge according to VDI/VDE 3845 (IEC60534 - 6 - 2) made of stainless steel, black powder-coated	775710
For Samson Type 3277 – Adapter kit with stainless steel adapter plates for valve stroke 15...30 mm	20068379
For Samson Type 3277 – Adapter kit with plastic adapter plates (POM black) for valve stroke 15...30 mm	20091532
For Samson Type 3277 – Adapter kit with stainless steel adapter plates for valve stroke 7.5 mm	20111009
Position feedback unit with proximity switches (optional for retrofitting) [1.]	677218
Booster for retrofitting on Booster.ready variants	20093020
Booster adapter cable for fieldbus devices (M12, 8-pin to valve connector) [2.]	60036526
Booster cable replacement connection cable (M8, 4-pin to valve connector) [3.]	60005074

1.) External end position indicator for retrofitting on SideCONTROL NAMUR.
2.) Is required once for attaching the booster to Booster.ready fieldbus devices (EtherNet/IP, Profinet, Modbus, büS). Not included in Article no. 20093020.
3.) Only as a spare part. A connection cable is already included in Article no. 20093020.

Accessories SideCONTROL remote

Description	Article no.
Mounting bracket for stainless steel wall mount (spare part), see "6. Product installation" on page 25	675715
Holder for standard rail mounting, aluminium/stainless steel, see "6. Product installation" on page 25	675702
Attachment kit for Type 21xx/23xx actuator series, actuator size Ø 70/90/130 mm	679917
Attachment kit for Type 21xx/23xx actuator series, actuator size Ø 225 mm	60025906
Adapter kit remote sensor, control valves Type 27xx, actuator size Ø 175/225 mm	679945
Sensor puck (spare part)	682240

DTS 1000120587 EN Version: A Status: RL (released | freigegeben | valide) printed: 28.10.2026