







PWM control electronics for electromagnetic proportional valves

- Programmable digital electronics
- Converts an analogue input signal into a PWM output signal
- Adjustable PWM frequency
- Digital communication (büS) possible
- Optional integrated time control and digital/analogue inputs

Product variants described in the data sheet may differ from the product presentation and description.

Can be combined with



Type 2873 ▸
Direct-acting 2-way standard solenoid control valve



Type 6013 ▸
Plunger valve 2/2-way direct-acting

Type description

The digital control electronics Type 8605 are used to operate proportional solenoid control valves in a power range from 40 - 2000 mA. The electronics convert an external standard signal into a pulse-width modulated (PWM) signal, which enables infinite adjustment of the opening of the proportional valve and hence a fluidic output parameter (e.g. flow rate). An internal current control with the duty cycle of the PWM signal as an actuating variable ensures that every value of the input signal, irrespective of the thermal state of the coil, is unambiguously assigned a given value of the effective coil current. A display and operating keys allow the electronics to be easily adapted to a particular proportional valve and to the specific conditions of an application. In order to integrate the control unit - and thus also the proportional valve - into a higher-level controller, the CAN-based variant of the control unit (called büS) is required. Parameterisation and configuration of the proportional valve can be performed quickly and easily using the Bürkert Communicator software. Furthermore, the büS control electronics enables the integration of shut-off valves into büS/CAN systems. By using the integrated time control function, a shut-off valve can be opened or closed for a certain period of time. This enables, for example, batch control solutions in filling processes. Optionally, Type 8605 can be equipped with an additional I/O board. This allows the connection of external sensors or switches. The valve behaviour on these input signals can be configured (e.g. 2-point control).

DTS 1000086947 EN Version: - Status: RL (released | freigegeben | valide) printed: 28.10.2026

© Christian Bürkert GmbH & Co. KG, Subject to alteration

Visit product website ▸

Table of contents

1. General technical data 3

1.1. Type 8605 control for proportional valves ... 3
1.2. Type 8605 (büS) control for shut-off/solenoid valves ... 3

2. Approvals and conformities 4

2.1. General notes ... 4
2.2. Conformity ... 4
2.3. Standards ... 4

3. Dimensions 4

3.1. Type 8605 control for proportional valves ... 4
Cable plug with operating unit (analogue variant only) ... 4
Cable plug without operating unit (analogue and bus variants, for bus variant only M12 plug, 5-pin) ... 5
Standard rail variant (analogue variant only) ... 5
3.2. Type 8605 (büS) control for shut-off/solenoid valves ... 6
Cable plug M12 plug, 5-pin ... 6
Cable plug M12 male connector, 5-pin and sensor input M12 female connector, 5-pin ... 6

4. Product connections 7

4.1. Electrical connection ... 7
Pin assignment Type 8605 control for proportional valves ... 7
Pin assignment Type 8605 control (büS) for shut-off/solenoid valves ... 8

5. Product operation 9

5.1. Functional overview ... 9
Type 8605 control for proportional valves ... 9
Type 8605 (büS) control for shut-off/solenoid valves ... 9
5.2. Compatibility operating unit Rev. 3 ... 9
New variant operating unit Type 8605 ... 9

6. Ordering information 10

6.1. Bürkert eShop ... 10
6.2. Bürkert product filter ... 10
6.3. Ordering chart ... 10
Type 8605 control for proportional valves ... 10
Type 8605 (büS) control for shut-off/solenoid valves ... 11
6.4. Ordering chart accessories ... 11
Analogue variant ... 11
büS variant ... 11

DTS 1000086947 EN Version: - Status: RL (released | freigegeben | valide) printed: 28.10.2026

1. General technical data

1.1. Type 8605 control for proportional valves

Product properties	Analogue variant	büS variant
Dimensions	Further information can be found in chapter "3.1. Type 8605 control for proportional valves" on page 4.	
Material		
Cable plug	Polyamide / PC	Polyamide / PC
Standard rail	Polyamide / PBT	–
Variant	• Cable plug for direct mounting (terminal strip with PG bushing or M12 plug, 4-pin) • Standard rail variant (DIN EN 50022)	Cable plug for direct mounting (M12 plug, 5-pin)
Ramp function	Time adjustable from 0...10 s	Time adjustable from 0...10 s
Electrical data		
Output signal for valve control	PWM signal: frequency adjustable from 80 Hz to 6 kHz	PWM signal: frequency adjustable from 80 Hz to 6 kHz
Output current (valve)	PWM: max. 2 A	PWM: max. 2 A
Operating voltage	12...24 V DC	12...24 V DC
Input impedance	< 200 Ω (with current input) > 20 kΩ (with voltage input)	120 Ω (required terminating resistor in the büS network, not included in scope of delivery)
Input signal	Standard signals: 0...20 mA, 4...20 mA or 0...5 V, 0...10 V (configurable)	Digital control via CANopen based system bus (büS)
Power consumption	Approx. 1 W (without valve)	Approx. 1 W (without valve)
Residual ripple	< 5 %	< 5 %
Voltage tolerance	± 10 %	± 10 %
Approvals and conformities		
Degree of protection		
Cable plug	IP65	IP65
Standard rail	IP40	–
Environment and installation		
Ambient temperature	- 10 °C...+ 60 °C	- 10 °C...+ 60 °C

1.2. Type 8605 (büS) control for shut-off/solenoid valves

Product properties	büS variant
Dimensions	Further information can be found in chapter "3.2. Type 8605 (büS) control for shut-off/solenoid valves" on page 6.
Material	
Cable plug	Polyamide / PC
Variant	• Cable plug for direct mounting (M12 plug, 5-pin) • Cable plug for direct mounting (M12 plug, 5-pin) and sensor input (M12 socket, 5-pin)
Time switch	Freely parameterizable via communicator
Electrical data	
Output signal for valve control	Nominal voltage or 0 V
Output current (valve)	Max. 1 A 100 % ED
Operating voltage	12...24 V DC
Input impedance	120 Ω (required terminating resistor in the büS network, not included in scope of delivery)
Input signal	Digital control via CANopen based system bus (büS)
Power consumption	Approx. 1 W (without valve)
Residual ripple	< 5 %
Voltage tolerance	± 10 %
Approvals and conformities	
Degree of protection	Cable plug IP65
Environment and installation	
Ambient temperature	- 10 °C...+ 60 °C

DTS 1000086947 EN Version: - Status: RL (released | freigegeben | valide) printed: 28.10.2026

2. Approvals and conformities

2.1. General notes

- The approvals and conformities listed below must be stated when making enquiries. This is the only way to ensure that the product complies with all required specifications.
- Not all available variants can be supplied with the below mentioned approvals or conformities.

2.2. Conformity

In accordance with the Declaration of Conformity, the product is compliant with the EU Directives.

2.3. Standards

The applied standards which are used to demonstrate compliance with the EU Directives are listed in the EU-Type Examination Certificate and/or the EU Declaration of Conformity.

3. Dimensions

3.1. Type 8605 control for proportional valves

Cable plug with operating unit (analogue variant only)

Note:
Dimensions in mm

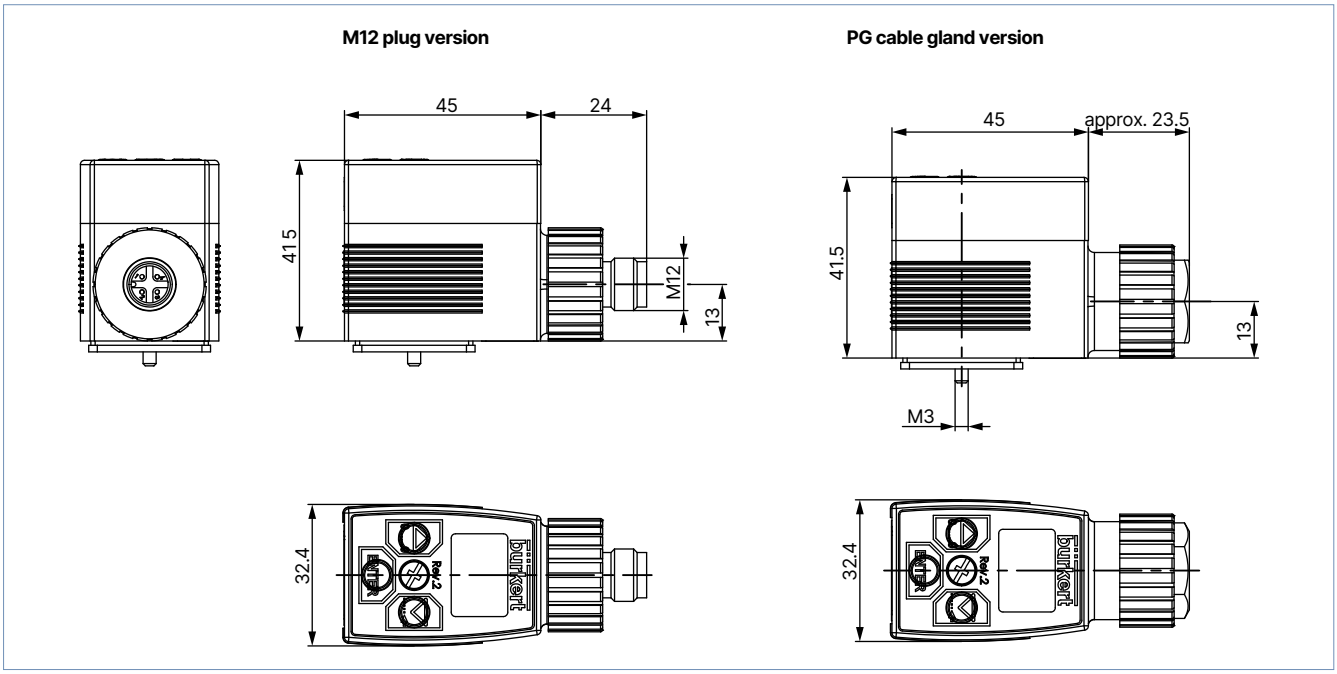

DTS 1000086947 EN Version: - Status: RL (released | freigegeben | valide) printed: 28.10.2026

Cable plug without operating unit (analogue and bus variants, for bus variant only M12 plug, 5-pin)

Note:
Dimensions in mm

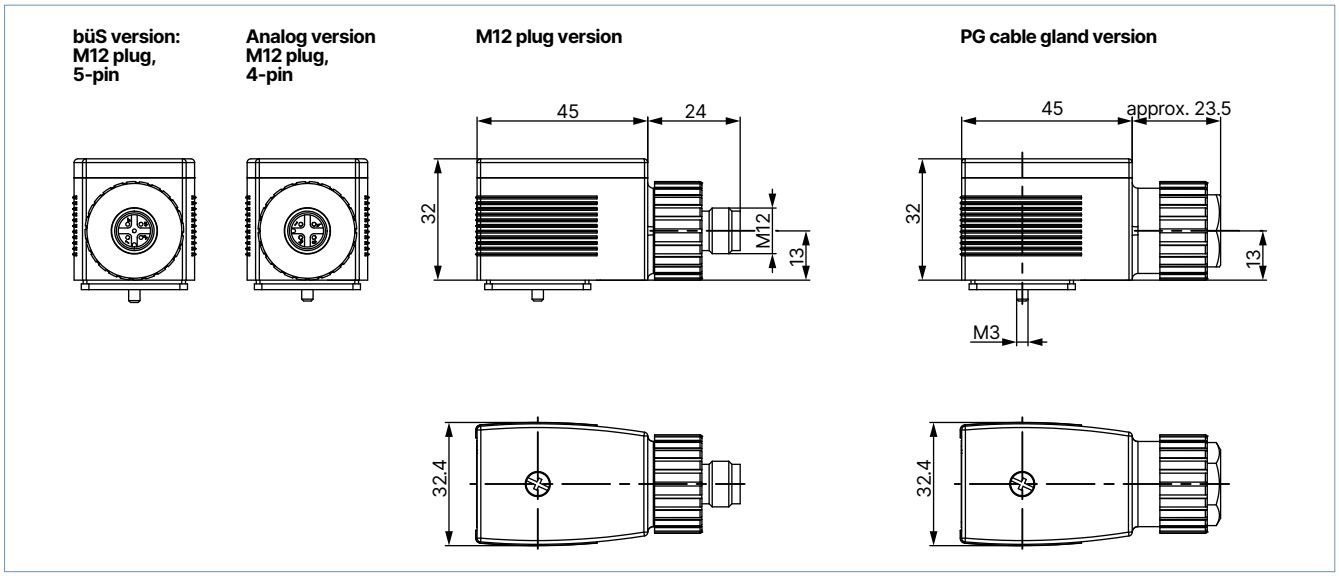

Standard rail variant (analogue variant only)

Note:
Dimensions in mm

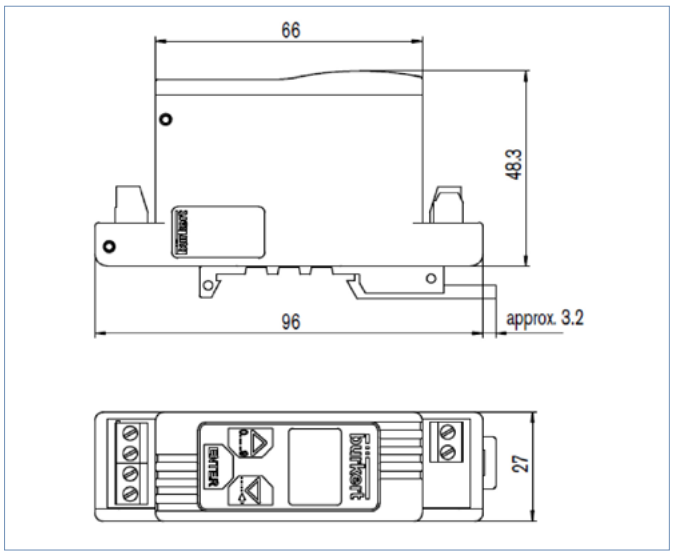

DTS 1000086947 EN Version: - Status: RL (released | freigegeben | valide) printed: 28.10.2026

3.2. Type 8605 (büS) control for shut-off/solenoid valves

Cable plug M12 plug, 5-pin

Note:
Dimensions in mm

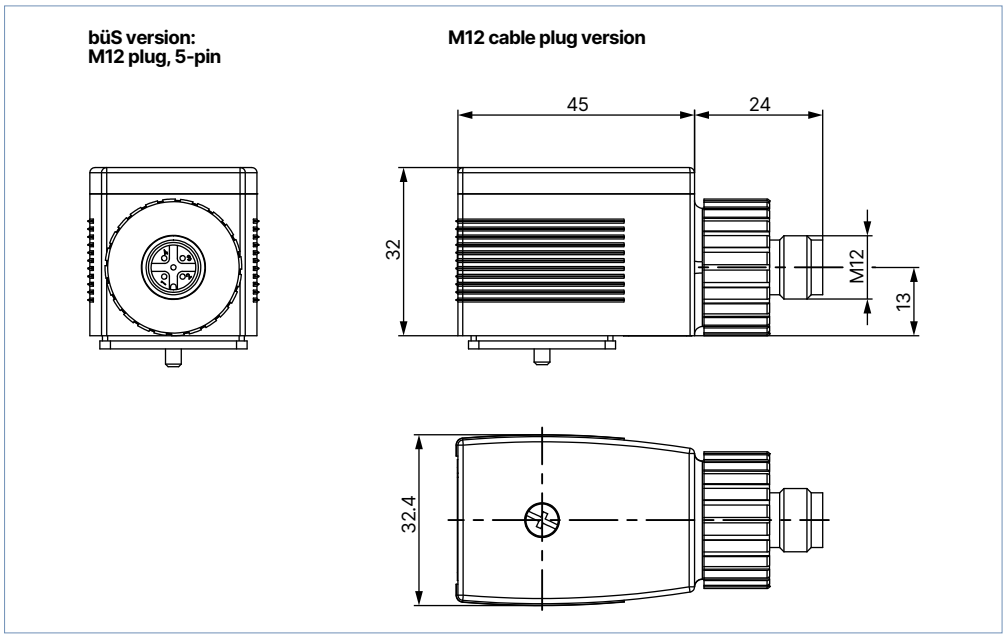

Cable plug M12 male connector, 5-pin and sensor input M12 female connector, 5-pin

Note:
Dimensions in mm

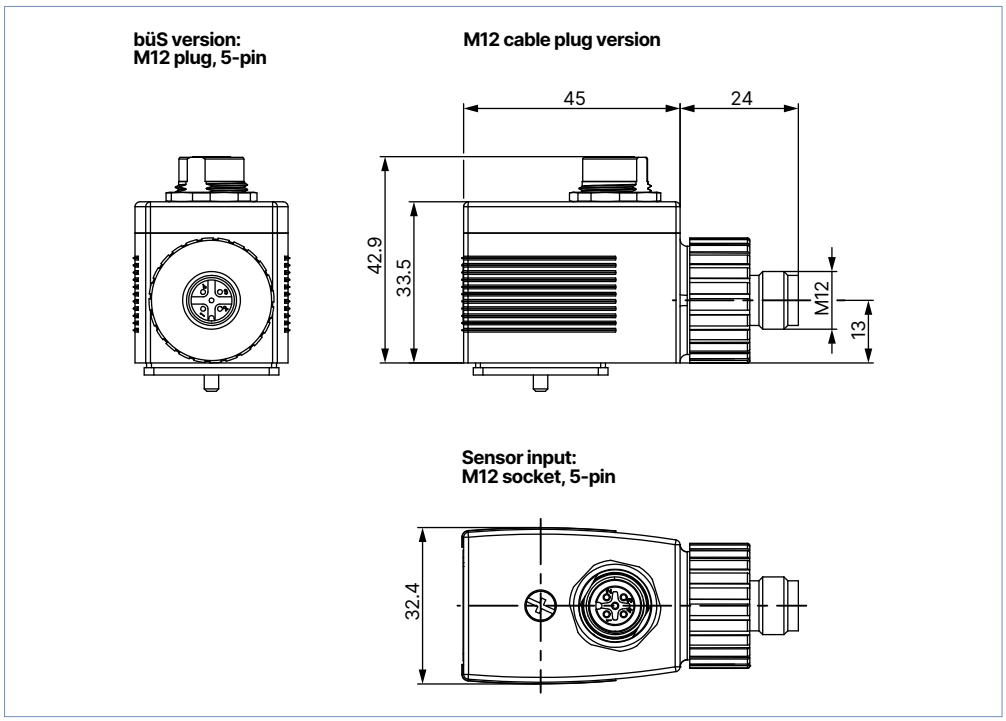

DTS 1000086947 EN Version: - Status: RL (released | freigegeben | valide) printed: 28.10.2026

4. Product connections

4.1. Electrical connection

Pin assignment Type 8605 control for proportional valves

Cable plug PG feed-through

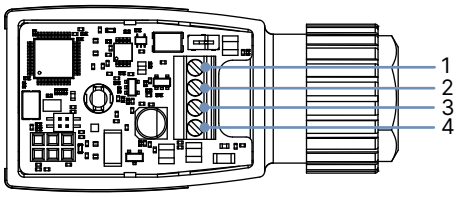

No.	Element
1	Standard signal +
2	Standard signal GND
3	GND
4	+ 12...24 V DC

Cable plug M12 plug, 4-pin

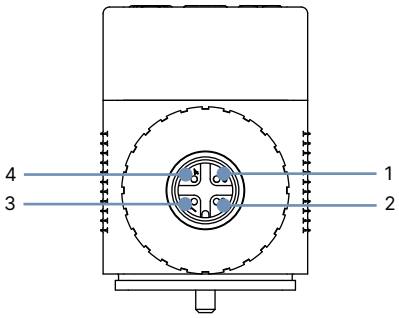

No.	Element
1	Standard signal GND
2	GND
3	+ 12...24 V DC
4	Standard signal +

Standard rail

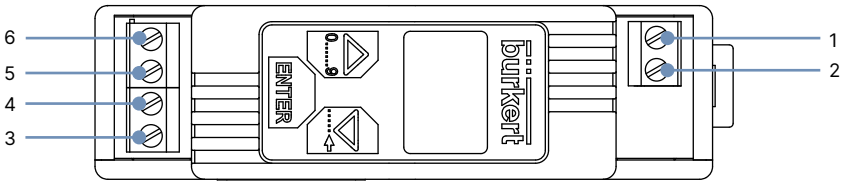

No.	Element
1	Valve
2	Valve
3	Standard signal +
4	Standard signal GND
5	GND
6	+ 12...24 V DC

Cable plug M12 plug, 5-pin (büS variant)

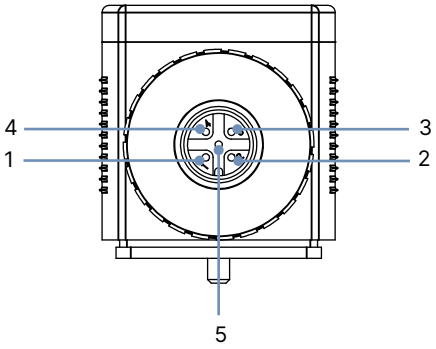

No.	Element
1	Shield
2	12...24 V
3	GND
4	CAN_H
5	CAN_L

DTS 1000086947 EN Version: - Status: RL (released | freigegeben | valide) printed: 28.10.2026

Pin assignment Type 8605 control (büS) for shut-off/solenoid valves

Cable plug M12 plug, 5-pin (büS variant)

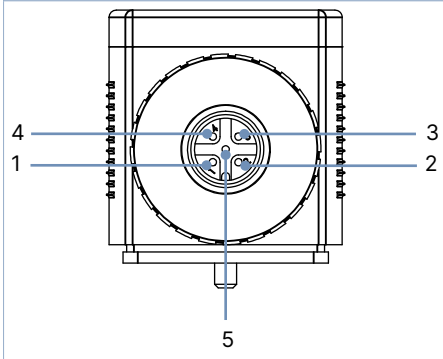

No.	Element
1	Shield
2	12...24 V
3	GND
4	CAN_H
5	CAN_L

Cable plug M12 plug, 5-pin and sensor input M12 socket, 5-pin (büS variant)

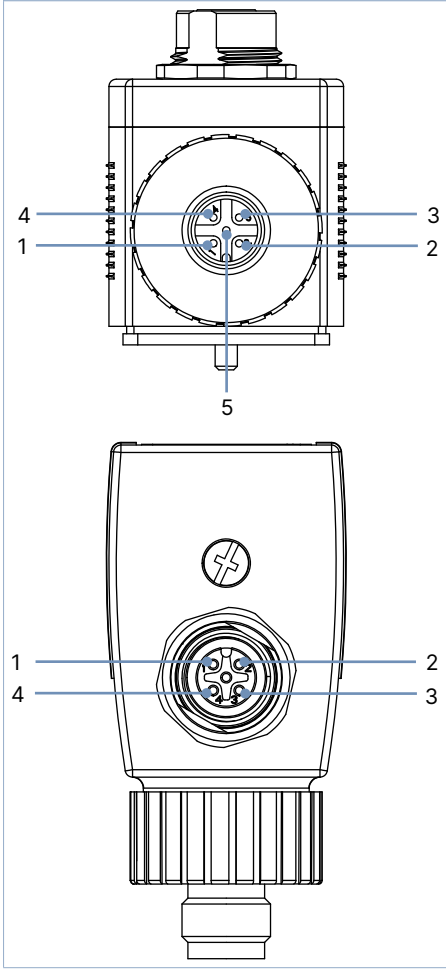

No.	Element
1	Shield
2	12...24 V
3	GND
4	CAN_H
5	CAN_L

No.	Element
1	24 V DC
2	DI2 (Digital input, frequency input)
3	GND
4	AI1/DI1 (Analogue input, digital input)

DTS 1000086947 EN Version: - Status: RL (released | freigegeben | valide) printed: 28.10.2026

5. Product operation

5.1. Functional overview

Type 8605 control for proportional valves

- Microcontroller controlled electronics
- Compensation of solenoid coil heating by internal current control
- Configurable ramp function
- Adjustable zero point switch-off
- Continuously adjustable PWM frequency
- Easy adaptation of the minimum and maximum current (opening start or full opening) to the actual pressure conditions
- Display and button (analogue variant)
- Switchable input standard signal (analogue variant)
- Digital communication based on CANopen (büS variant)

Type 8605 (büS) control for shut-off/solenoid valves

- Microcontroller controlled electronics
- Digital communication on CANopen basis
- Integrated time control function
- Switching counter
- Energy-saving operation through power reduction
- Optional digital/analogue inputs, if required with 2-point control, for variant with sensor input

5.2. Compatibility operating unit Rev. 3

New variant operating unit Type 8605

A new variant of the operating unit Type 8605 has been available since Q3/2024. The current variant Rev. 2 (article no. 582878) will be replaced by Rev. 3 (article no. 20097278). The control electronics themselves will also be updated to Rev. 3.

The following combinations are compatible with each other:

Control electronics	Operating unit Rev. 2 (Article no. 582878)	Operating unit Rev. 3 (Article no. 20097278)
Rev. 2	X	–
Rev. 3	X	X

– = not compatible
X = compatible

DTS 1000086947 EN Version: - Status: RL (released | freigegeben | valide) printed: 28.10.2026

6. Ordering information

6.1. Bürkert eShop



Bürkert eShop – Easy ordering and quick delivery

You want to find your desired Bürkert product or spare part quickly and order directly? Our online shop is available for you 24/7. Sign up and enjoy all the benefits.

Order online now

6.2. Bürkert product filter



Bürkert product filter – Get quickly to the right product

You want to select products comfortably based on your technical requirements?
Use the Bürkert product filter and find suitable articles for your application quickly and easily.

Try out our product filter

6.3. Ordering chart

Type 8605 control for proportional valves

Note:

- For two possible current ranges, the smaller one should be preferred.
- When using the control electronics in combination with valves from other manufacturers, make sure that these valves do not fall below a minimum load of 7Ω. Activation of valves with a lower minimum load will damage the Type 8605 control electronics.

Variant	Max. coil current range [mA]	2861, 2871 24 V DC	2861, 2871 12 V DC	2863, 2873 24 V DC	2863, 2873 12 V DC	2865, 2875 24 V DC	2865, 2875 12 V DC	2836 24 V DC	6024 24 V DC	6024 12 V DC	6223 24 V DC	6223 12 V DC	Article no.
Cable plug with PG gland	200...1000	–	–	X	X	X	–	–	X	–	X	–	316530
Cable plug with M12 connection	200...1000	–	–	X	X	X	–	–	X	–	X	–	316528
Cable plug with PG gland	500...2000	–	–	–	X	X	X	X	X	X	–	X	316529
Cable plug with M12 connection	500...2000	–	–	–	X	X	X	X	X	X	–	X	316526
Cable plug with PG gland without operating unit	200...1000	–	–	X	X	X	–	–	X	–	X	–	316521
Cable plug with M12 connection without operating unit	200...1000	–	–	X	X	X	–	–	X	–	X	–	316522
Cable plug with PG gland without operating unit	500...2000	–	–	–	X	X	X	X	X	X	–	X	316523
Cable plug with M12 connection without operating unit	500...2000	–	–	–	X	X	X	X	X	X	–	X	316525
Standard rail	40...220	X	–	–	–	–	–	–	–	–	–	–	316531
Standard rail	200...1000	X	X	X	X	X	–	–	X	–	X	–	316532
Standard rail	500...2000	–	–	–	X	X	X	X	X	X	–	X	316533
Cable plug with M12 connection büS PWM	200...1000	–	–	X	X	X	–	–	X	–	X	–	355655
Cable plug with M12 connection büS PWM	500...2000	–	–	–	X	X	X	X	X	X	–	X	364714

– = not available
X = available

DTS 1000086947 EN Version: - Status: RL (released | freigegeben | valide) printed: 28.10.2026

Type 8605 (büS) control for shut-off/solenoid valves

Variant	Article no.
Cable plug with M12 connection	302988
Cable plug with M12 connection and sensor input (M12)	302990

6.4. Ordering chart accessories

Analogue variant

Accessory	Article no.
Operating unit for Type 8605 cable plug Rev. 2	582878
Operating unit for Type 8605 cable plug Rev. 3	20097278
M12 circular socket, 4-pin, angled (90°)	784301
M12 circular socket with cable, 4-pin, A-coded, cable length: 5 m	918038
Cover set (for operation without operating unit)	670549

büS variant

Selection of accessories	Article no.
USB-büS interface set 1 (Type 8923) for connection to the Bürkert Communicator software: includes connection cable (M12 and micro USB), stick with integrated terminating resistor, power supply and software	772426
USB-büS interface set 2 (Type 8923) for connection to the Bürkert Communicator software: including büS stick, connection cable to M12 plug, M12 connection cable on micro USB for the büS service interface and Y distributor, cable length: 0.7 m	772551
büS Y plug	772420
büS Y plug for linking 2 separately supplied segments of a büS network	772421
büS plug, M12, terminating resistor 120 Ω	772424
büS socket, M12, terminating resistor 120 Ω	772425
büS cable extension, M12, cable length: 0.2 m	772402
büS cable extension, M12, cable length: 0.5 m	772403

DTS 1000086947 EN Version: - Status: RL (released | freigegeben | valide) printed: 28.10.2026