bürkert
FLUID CONTROL SYSTEMS









2/2-way or 3/2-way rocker solenoid valve with separating diaphragm

- For the highest chemical resistance requirements
- Compact design with 16 mm width and a flow coefficient of up to 0.058
- USP Chapter 87/88 Class VI
- Flexible design for customised solutions
- High back-pressure tightness, excellent cleanability and 100 % duty cycle

Product variants described in the data sheet may differ from the product presentation and description.

Can be combined with



Type 1054
Device plug



Type 2505
10 mm socket for Bürkert small solenoid valves



Type TVU003
Fittings for UNF connections with PTFE hose for analysis valves with UNF 1/4"-28 connection

Type description

Bürkert's unique Type 0127 solenoid valve is pre-destined for use in laboratory, medical and analytical technology as the pioneer of small media-separated valves. It continues to set the pace today with its rocker technology, which activates the separating diaphragms between actuator and fluid. It guarantees precise switching of tiny volumes of even aggressive media at the lowest temperature input, thanks to the coil. It is also very easy to flush and is characterised by its minimal internal volume and freedom from almost all dead space. The valves can be stacked on manifolds and can be wired with central wiring on request. Special variants with minimum dead space are available on request.

DTS 1000010673 EN Version: - Status: RL (released | freigegeben | valide) printed: 28.10.2026

© Christian Bürkert GmbH & Co. KG, Subject to alteration

Visit product website

Table of contents

1. General technical data 3

1.1. General data ... 3
1.2. Medium pressure ... 4
1.3. Medium temperature ... 4
1.4. Internal volume ... 5

2. Product variants 5

3. Circuit functions 6

4. Approvals and conformities 6

4.1. General notes ... 6
4.2. Conformity ... 6
4.3. Standards ... 6
4.4. Foods and beverages/Hygiene ... 6

5. Materials 7

5.1. Bürkert resistApp ... 7
5.2. Material specifications ... 7

6. Dimensions 8

6.1. Threaded port variant PEEK G ⅛ with rectangular plug Type 2505 ... 8
6.2. Threaded port variant UNF ¼" - 28 with cable plug Type 1054 ... 8
6.3. Tube connector variant with cable plug Type 1054 ... 9
6.4. Sub-base variant with flying leads ... 10
6.5. Bürkert sub-base interface, 3-way standard ... 10
Bürkert sub-base interface, 2-way standard ... 11
Bürkert sub-base interface, 2-way (low dead volume) ... 11

7. Ordering information 12

7.1. Bürkert eShop ... 12
7.2. Bürkert product filter ... 12
7.3. Bürkert Product Enquiry Form ... 12
7.4. Ordering chart ... 13
Standard variant ... 13
Variant with power reduction ... 14
Variant with approvals and conformities ... 14
7.5. Ordering chart accessories ... 15
Cable plug Type 1054 ... 15
Rectangular cable plug Type 2505 ... 15
Fittings and hoses ... 15
Multiple manifolds for Bürkert sub-base interface, 2-way ... 16
Multiple manifolds for Bürkert sub-base interface, 3-way ... 18
Single manifolds for Bürkert sub-base interface, 3-way ... 19

DTS 1000010673 EN Version: - Status: RL (released | freigegeben | valide) printed: 28.10.2026

1. General technical data

1.1. General data

Product properties	
Dimensions	Further information can be found in chapter "6. Dimensions" on page 8.
Material	
Seal	FFKM, FKM, EPDM
Valve body	PEEK, PPS (PVDF on request)
Internal volume [1.]	Sub-base: from 44 µl Tube connection: from 35 µl G ⅛: from 100 µl UNF ¼"- 28: from 25 µl < 10 µl available on request Further information can be found in chapter "1.4. Internal volume" on page 5
Orifice	DN 0.8...DN 1.6
Circuit function	A, B and T Further information can be found in chapter "3. Circuit functions" on page 6.
Typical product service life [2.]	10 mio. switching cycles (according to laboratory endurance test with FKM and EPDM)
Performance data	
Duty cycle	100 % continuous operation Manifold mounting: If medium or ambient temperatures are above + 40 °C: intermittent operation 40 % (minimum 10 min)
Switching time [3.]	Open: approx. 25 ms (pressure build-up 0...10 %) Closing: approx. 25 ms (pressure reduction 100...90 %)
Electrical data	
Operating voltage	12 V DC, 24 V DC, 24 V UC (other voltages on request)
Nominal power	3.4 W (Variants with internal power reduction possible)
Voltage tolerance	± 10 %
Medium data	
Operating medium	Resistant to neutral and aggressive gases and liquids. (see chapter "5.1. Bürkert resistApp" on page 7)
Medium temperature	Max. - 10 °C...+ 55 °C Further information can be found in chapter "1.3. Medium temperature" on page 4.
Viscosity	Max. 21 mm²/s
Product connections	
Electrical connection [4.]	Cable plug **Type 1054** ▶ Two FEP-leads 0.2 mm² (AWG24), length 500 mm Rectangular cable plug **Type 2505** ▶
Port connection	Bürkert sub-base (16 × 27 mm) Tube connection G ⅛ UNF ¼"- 28
Approvals and conformities	
Degree of protection	IP65 with flying leads and cable plug **Type 1054** ▶ IP30 with rectangular cable plug **Type 2505** ▶
Foods and beverages/Hygiene	FDA on request only with seal material EPDM USP Chapter 87/88 Class VI on request only with body material PPS/PEEK and seal material EPDM Further information can be found in chapter "4.4. Foods and beverages/Hygiene" on page 6.
Environment and installation	
Installation	As required, preferably with actuator upright
Ambient temperature	Max. + 55 °C

1.) The internal volume may vary depending on the body, see "1.4. Internal volume" on page 5 for further information.
2.) The life expectancy depends on medium, temperature, pressure, seal material, individual application conditions.
3.) Measurement at + 20 °C, 2 bar at the valve outlet according to DIN ISO 12238:2001
4.) Other electric connectors and other cable lengths are available on request.

DTS 1000010673 EN Version: - Status: RL (released | freigegeben | valide) printed: 28.10.2026

1.2. Medium pressure

Note:

- Deviating pressure ranges are possible on request.
- For low dead volume variants, the back pressure is limited to a maximum of 1 bar.

Circuit functions	Orifice [mm]	Port connection	Max. differential pressure [1.] [bar]
CF A 2/2-way solenoid valve Direct-acting Normally closed 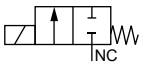	0.8	Sub-base	0...6 [2.]
	1.2	UNF ¼"- 28 Sub-base	0...5 [2.]
	1.6	UNF ¼"- 28	0...2 [2.]
		Sub-base G ⅛ Tube connection	Vac...2
CF B 2/2-way solenoid valve Direct-acting Normally open 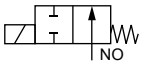	0.8	Sub-base	0...6 [2.]
	1.2	UNF ¼"- 28 Sub-base	0...5 [2.]
	1.6	UNF ¼"- 28	0...2 [2.]
		Sub-base G ⅛ Tube connection	Vac...2
CF T 3/2-way solenoid valve Direct-acting Flow direction optional Universal 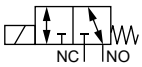	0.8	Sub-base	0...6 [2.]
	1.2	UNF ¼"- 28 Sub-base	0...5 [2.]
	1.6	UNF ¼"- 28	0...2 [2.]
		Sub-base G ⅛ Tube connection	Vac...2

1.) Pressure data: overpressure to atmospheric pressure
2.) Vacuum is available on request

1.3. Medium temperature

Note:
The permissible medium temperature depends on the seal material and the orifice.

Description	Orifice	Seal material	Temperature range
Medium temperature	DN 0.8	FFKM	+ 5 °C...+ 50 °C
	DN 0.8	FKM	0 °C...+ 50 °C
	DN 0.8	EPDM	- 5 °C...+ 50 °C
	DN 1.2 and DN 1.6	FFKM	+ 10 °C...+ 50 °C
	DN 1.2 and DN 1.6	FKM	+ 5 °C...+ 50 °C
	DN 1.2 and DN 1.6	EPDM	0 °C...+ 50 °C
Medium temperature with limitation on switching time and life expectancy	DN 0.8	FFKM	0 °C...+ 50 °C
	DN 0.8	FKM	- 5 °C...+ 55 °C
	DN 0.8	EPDM	- 10 °C...+ 50 °C
	DN 1.2 and DN 1.6	FFKM	+ 5 °C...+ 50 °C
	DN 1.2 and DN 1.6 [1.]	FKM	0 °C...+ 55 °C
	DN 1.2 and DN 1.6	EPDM	- 5 °C...+ 50 °C

1.) Available up to - 15 °C on request.

DTS 1000010673 EN Version: - Status: RL (released | freigegeben | valide) printed: 28.10.2026

1.4. Internal volume

Note:
The internal volume is depending on valve body.

Body	2-way (low dead volume)		2-way		3-way	
	Fluid chamber	Total	Fluid chamber	Total	Fluid chamber	Total
Sub-base	44 µl	54 µl	97 µl	106 µl	90 µl	106 µl
G ⅛	–	–	94 µl	207 µl	88 µl	228 µl
UNF ¼"- 28	25 µl	69 µl	55 µl	79 µl	54 µl	95 µl
Tube connection	35 µl	105 µl	67 µl	135 µl	73 µl	178 µl

2. Product variants

Flying leads device with sub-base	Rectangular plug with sub-base	Rectangular plug with tube connection
		

Rectangular plug with threaded body G ⅛	Rectangular plug with threaded body UNF ¼"- 28
	

DTS 1000010673 EN Version: - Status: RL (released | freigegeben | valide) printed: 28.10.2026

3. Circuit functions

Symbol	Description
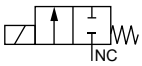	**Circuit function A (CF A)** 2/2-way solenoid valve Direct-acting Normally closed
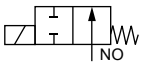	**Circuit function B (CF B)** 2/2-way solenoid valve Direct-acting Normally open
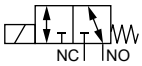	**Circuit function T (CF T)** 3/2-way solenoid valve Direct-acting Flow direction optional Universal

4. Approvals and conformities

4.1. General notes

- The approvals and conformities listed below must be stated when making enquiries. This is the only way to ensure that the product complies with all required specifications.
- Not all available variants can be supplied with the below mentioned approvals or conformities.

4.2. Conformity

In accordance with the Declaration of Conformity, the product is compliant with the EU Directives.

4.3. Standards

The applied standards which are used to demonstrate compliance with the EU Directives are listed in the EU-Type Examination Certificate and/or the EU Declaration of Conformity.

4.4. Foods and beverages/Hygiene

Conformity	Description
FDA	**FDA – Code of Federal Regulations (valid for the variable code PL03)** All wetted materials are compliant with the Code of Federal Regulations published by the FDA (Food and Drug Administration, USA) according to the manufacturer's declaration.
USP	**United States Pharmacopeial Convention (USP) (valid for the variable code PL04)** All wetted materials are biocompatible according to the manufacturer's declaration.

DTS 1000010673 EN Version: - Status: RL (released | freigegeben | valide) printed: 28.10.2026

5. Materials

5.1. Bürkert resistApp

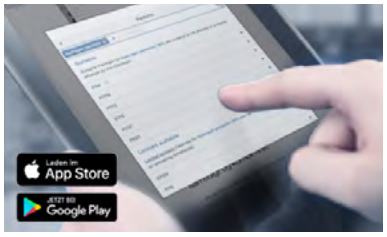

Bürkert resistApp – Chemical resistance chart

You want to ensure the reliability and durability of the materials in your individual application case? Verify your combination of media and materials on our website or in our resistApp.

Start chemical resistance check

5.2. Material specifications

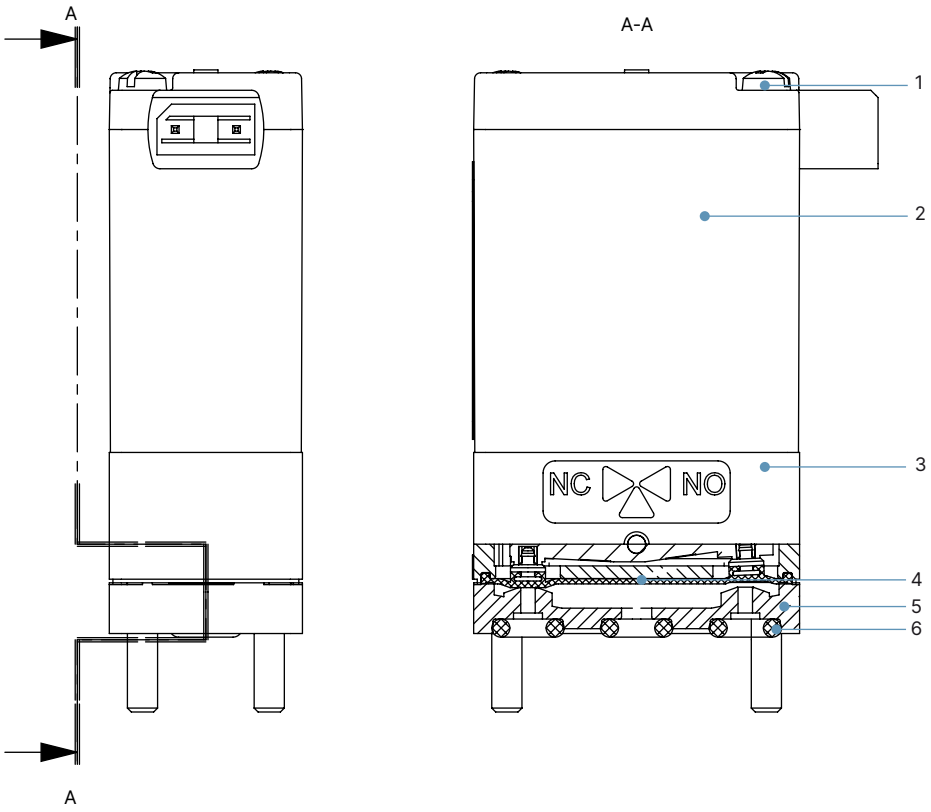

No.	Element	Material
1	Rounded head screw M2.5 (from end to end)	Stainless steel
2	Coil	Epoxy
3	Actuator housing	PPS
4	Diaphragm 1.)	FFKM, FKM, EPDM
5	Valve body 1.)	PEEK, PPS, (PVDF on request)
6	Flange seal 1.)	FFKM, FKM, EPDM

1.) Wetted

DTS 1000010673 EN Version: - Status: RL (released | freigegeben | valide) printed: 28.10.2026

6. Dimensions

6.1. Threaded port variant PEEK G ⅛ with rectangular plug Type 2505

Note:

- Dimensions in mm
- Other variants are available on request.

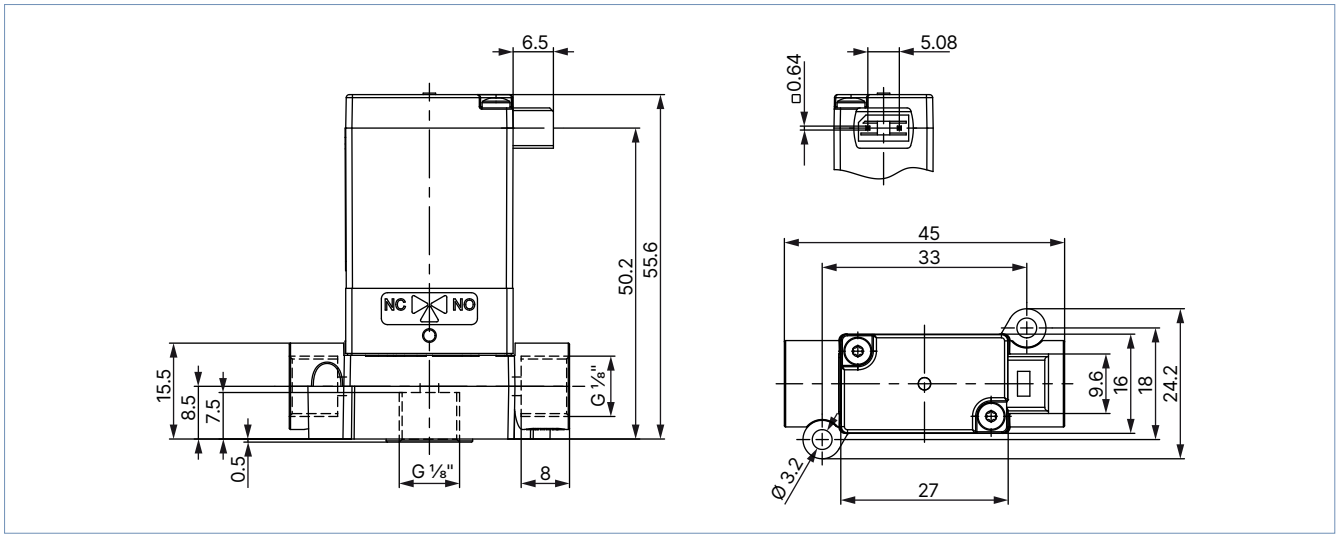

6.2. Threaded port variant UNF ¼" - 28 with cable plug Type 1054

Note:

- Dimensions in mm
- Other variants are available on request.

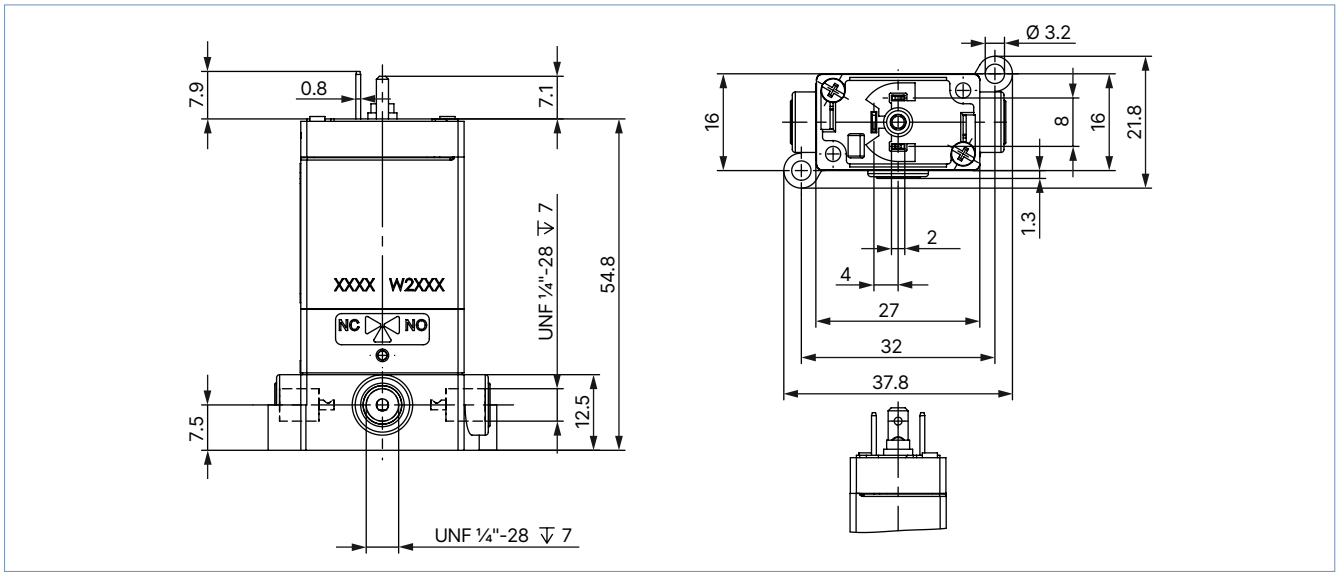

DTS 1000010673 EN Version: - Status: RL (released | freigegeben | valide) printed: 28.10.2026

6.3. Tube connector variant with cable plug Type 1054

Note:

- Dimensions in mm
- Other variants are available on request.

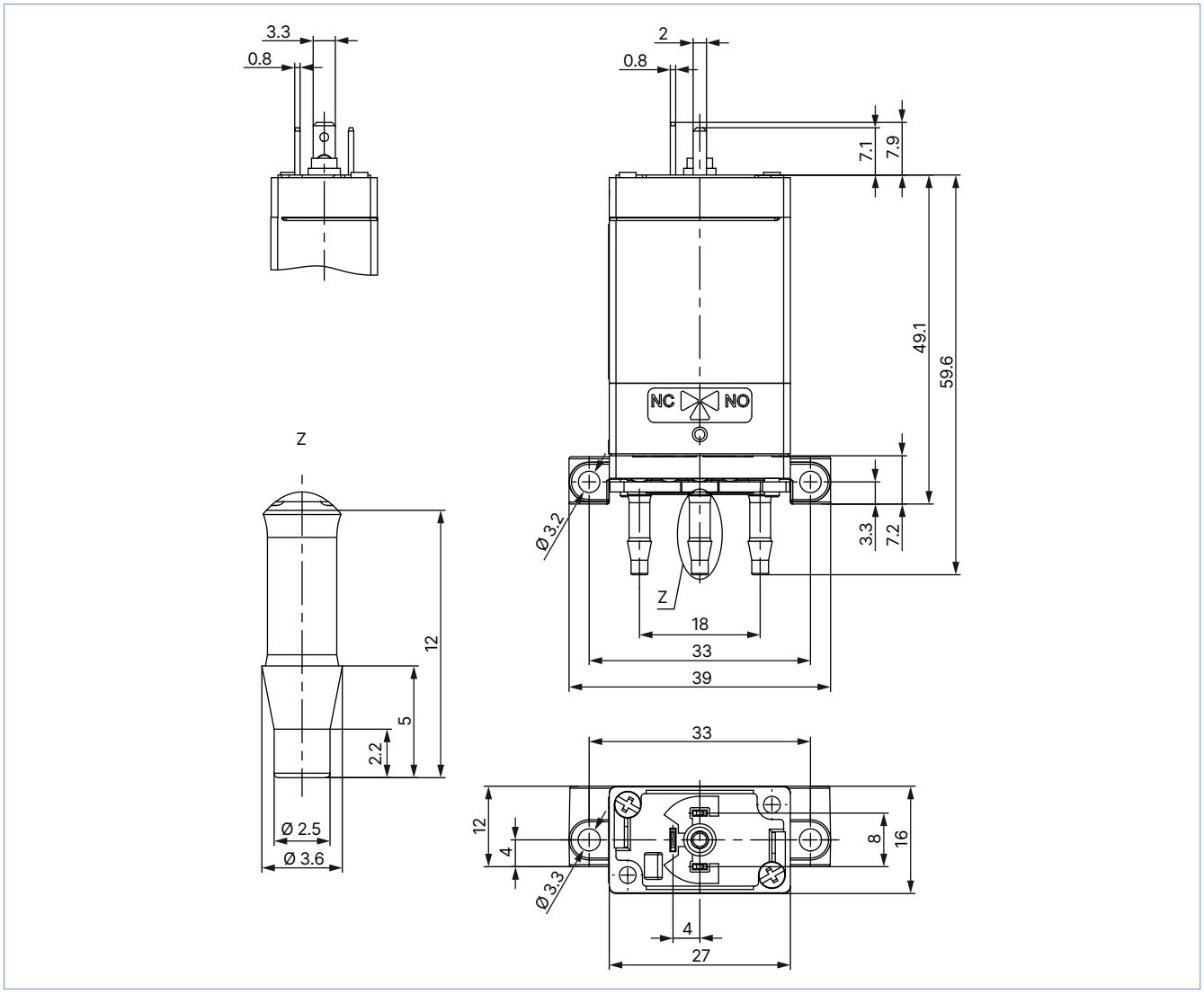

DTS 1000010673 EN Version: - Status: RL (released | freigegeben | valide) printed: 28.10.2026

6.4. Sub-base variant with flying leads

Note:

- Dimensions in mm
- Other screw length are available on request.
- Self-tapping screws are available on request.

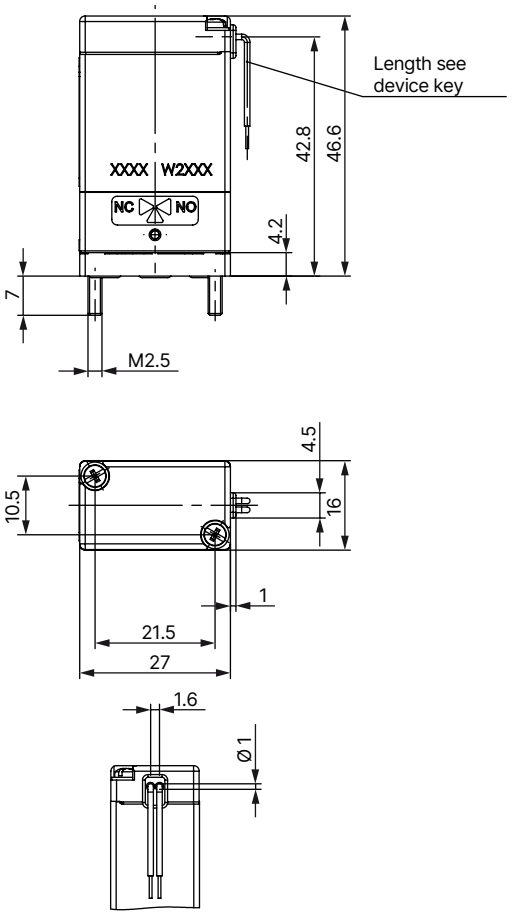

Classification of fluid connections
Circuit function A (CF A) 2/2-way solenoid valve Direct-acting Normally closed
Circuit function B (CF B) 2/2-way solenoid valve Direct-acting Normally open
Circuit function T (CF T) 3/2-way solenoid valve Direct-acting Flow direction optional Universal
See chapter "3. Circuit functions" on page 6

6.5. Bürkert sub-base interface, 3-way standard

Note:
Dimensions in mm

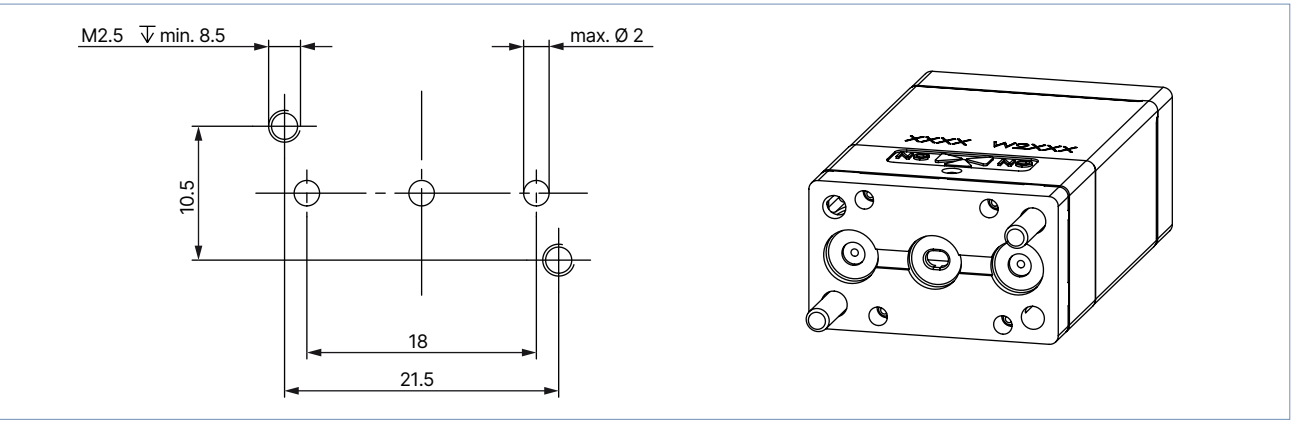

DTS 1000010673 EN Version: - Status: RL (released | freigegeben | valide) printed: 28.10.2026

Bürkert sub-base interface, 2-way standard

Note:
Dimensions in mm

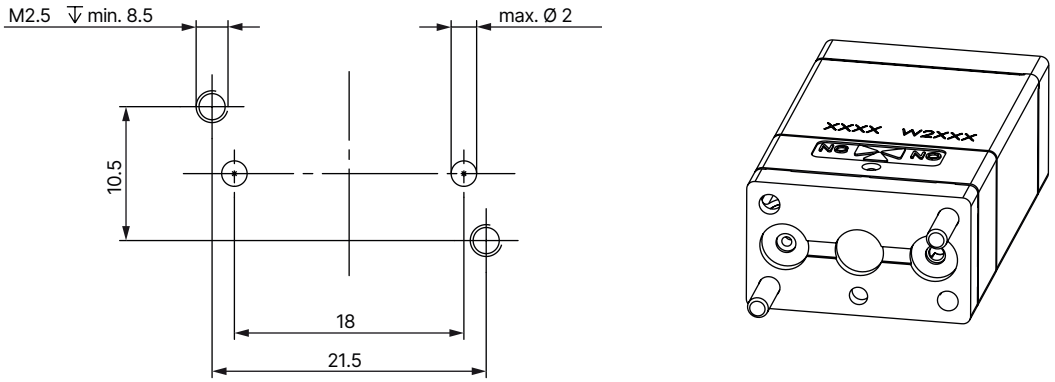

Bürkert sub-base interface, 2-way (low dead volume)

Note:
- Dimensions in mm
- Available on request

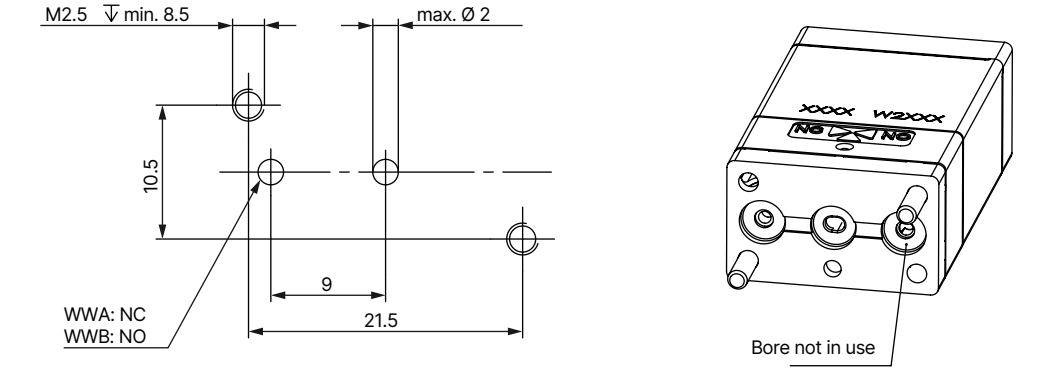

DTS 1000010673 EN Version: - Status: RL (released | freigegeben | valide) printed: 28.10.2026

7. Ordering information

7.1. Bürkert eShop



Bürkert eShop – Easy ordering and quick delivery

You want to find your desired Bürkert product or spare part quickly and order directly? Our online shop is available for you 24/7. Sign up and enjoy all the benefits.

Order online now

7.2. Bürkert product filter



Bürkert product filter – Get quickly to the right product

You want to select products comfortably based on your technical requirements?
Use the Bürkert product filter and find suitable articles for your application quickly and easily.

Try out our product filter

7.3. Bürkert Product Enquiry Form

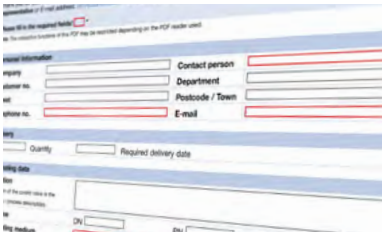

Bürkert Product Enquiry Form – Your enquiry quickly and compactly

Would you like to make a specific product enquiry based on your technical requirements? Use our Product Enquiry Form for this purpose. There you will find all the relevant information for your Bürkert contact. This will enable us to provide you with the best possible advice.

Fill out the form now

DTS 1000010673 EN Version: - Status: RL (released | freigegeben | valide) printed: 28.10.2026

7.4. Ordering chart

Standard variant

Note:

- Deviating pressure ranges are possible on request.
- 2-way variants with minimum dead space are available on request.
- 2 x fastening screws M2.5 for sub-base variants are included in the scope of delivery.
- Connectors for rectangular plugs and cable plugs are not included in the scope of delivery and must be ordered separately, see "7.5. Ordering chart accessories" on page 15.
- Other variants are available on request.

Circuit function	Port connection	Orifice [mm]	Q_{Nn} value air [l/min]	K_V value water [m³/h]	C_V value [gpm]	Voltage/ Frequency [V/Hz]	Pressure range [bar] 1.)	Body material	Seal material	Electrical connection	Article no.
CF A 2/2-way solenoid valve Direct-acting Normally closed 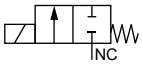	Sub-base	0.8	16	0.015	0.017	24/DC	0...6	PEEK	FFKM	Flying leads, 0.5 m	276699
								PPS	FKM	Flying leads, 0.5 m	264327
								PPS	EPDM	Rectangular plug	276701
	Sub-base	1.2	32	0.03	0.035	24/DC	0...5	PEEK	FFKM	Flying leads, 0.5 m	276703
										Rectangular plug	276710
								PPS	FKM	Flying leads, 0.5 m	276718
								PPS	EPDM	Cable plug	276728
	UNF ¼"- 28	1.2	27	0.025	0.029	12/DC	0...5	PEEK	FFKM	Flying leads, 0.5 m	244706
						24/DC					280858
	Sub-base	1.6	49	0.045	0.052	24/DC	Vac...2	PEEK	FFKM	Flying leads, 0.5 m	242451
								PPS	FKM	Rectangular plug	273398
						12/DC		PPS	EPDM	Rectangular plug	276746
	Tube connector	1.6	49	0.045	0.052	24/DC	Vac...2	PEEK	FFKM	Flying leads, 0.5 m	20046222
										Rectangular plug	20043727
	G ⅛	1.6	54	0.05	0.058	24/DC	Vac...2	PEEK	FFKM	Flying leads, 0.5 m	20051573
										Rectangular plug	20043555
	UNF ¼"- 28	1.6	33	0.03	0.035	24/DC	0...2	PEEK	FFKM	Flying leads, 0.5 m	463551
										Rectangular plug	262460
										Cable plug	207675
CF B 2/2-way solenoid valve Direct-acting Normally open 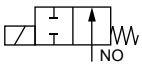	Sub-base	1.6	49	0.045	0.052	24/DC	Vac...2	PPS	EPDM	Rectangular plug	276747
	Tube connector	1.6	49	0.045	0.052	24/DC	Vac...2	PEEK	FFKM	Flying leads, 0.5 m	20050306
										Rectangular plug	20050309
	G ⅛	1.6	54	0.05	0.058	24/DC	Vac...2	PEEK	FFKM	Flying leads, 0.5 m	20041223
										Rectangular plug	20043554
CF T 3/2-way solenoid valve Direct-acting Flow direction optional Universal 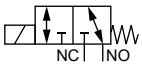	Sub-base	0.8	16	0.015	0.017	24/DC	0...6	PEEK	FFKM	Flying leads, 0.5 m	276748
								PPS	FKM	Rectangular plug	276749
								PPS	EPDM	Rectangular plug	276750
	Sub-base	1.2	32	0.03	0.035	24/DC	0...5	PEEK	FFKM	Flying leads, 0.5 m	276753
										Rectangular plug	276754
								PPS	FKM	Flying leads, 0.5 m	276756
								PPS	EPDM	Rectangular plug	276758
	UNF ¼"- 28	1.2	27	0.025	0.029	12/DC	0...5	PEEK	FFKM	Flying leads, 0.5 m	244696
						24/DC				Rectangular plug	297064
										Cable plug	269045
	Sub-base	1.6	49	0.045	0.052	24/DC	Vac...2	PEEK	FFKM	Flying leads, 0.5 m	460264
								PPS	FKM	Rectangular plug	271604
								PPS	EPDM	Rectangular plug	276759
	Tube connector	1.6	49	0.045	0.052	24/DC	Vac...2	PEEK	FFKM	Flying leads, 0.5 m	20038002
										Rectangular plug	20050311
	G ⅛	1.6	54	0.05	0.054	24/DC	Vac...2	PEEK	FFKM	Flying leads, 0.5 m	20041217
										Rectangular plug	20051577
	UNF ¼"- 28	1.6	33	0.03	0.035	24/DC	0...2	PEEK	FFKM	Flying leads, 0.5 m	464968
										Rectangular plug	262461
										Cable plug	280172

1.) Pressure data: overpressure to atmospheric pressure

DTS 1000010673 EN Version: - Status: RL (released | freigegeben | valide) printed: 28.10.2026

DTS 1000010673 EN Version: - Status: RL (released | freigegeben | valide) printed: 28.10.2026

Variant with power reduction

Note:

- After approx. 500 ms, the nominal power is automatically reduced from 4 W to 1 W.
- 2 x fastening screws M2.5 for sub-base variants are included in the scope of delivery.
- Connectors for rectangular plugs and cable plugs are not included in the scope of delivery and must be ordered separately, see "7.5. Ordering chart accessories" on page 15.
- Other variants are available on request.

Circuit function	Port connection	Orifice	Q_{Nn} value air	K_V value water	C_V value	Voltage/ Frequency	Pressure range	Body material	Seal material	Electrical connection	Article no.
		[mm]	[l/min]	[m³/h]	[gpm]	[V/Hz]	[bar] 1.)				
CF A 2/2-way solenoid valve Direct-acting Normally closed 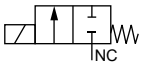	Sub-base	1.2	32	0.03	0.035	24/DC	0...5	PPS	FKM	Rectangular plug	357227
	UNF ¼"- 28	1.6	33	0.03	0.035	24/DC	0...2	PEEK	FFKM	Rectangular plug	357229
CF T 3/2-way solenoid valve Direct-acting Flow direction optional Universal 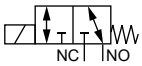	Sub-base	1.2	32	0.03	0.035	24/DC	0...5	PPS	FKM	Rectangular plug	357230
	UNF ¼"- 28	1.6	33	0.03	0.035	24/DC	0...2	PEEK	FFKM	Rectangular plug	357233

1.) Pressure data: overpressure to atmospheric pressure

Variant with approvals and conformities

Note:

- All valves have PEEK body material and EPDM seal material.
- 2 x fastening screws M2.5 for sub-base variants are included in the scope of delivery.
- Connectors for rectangular plugs and cable plugs are not included in the scope of delivery and must be ordered separately, see "7.5. Ordering chart accessories" on page 15.
- Other variants are available on request.

Circuit function	Port connection	Orifice	Q_{Nn} value air	K_V value water	C_V value	Voltage/ Frequency	Pressure range	Electrical connection	Conformity	Article no.
		[mm]	[l/min]	[m³/h]	[gpm]	[V/Hz]	[bar] 1.)			
CF A 2/2-way solenoid valve Direct-acting Normally closed 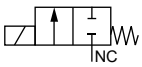	Sub-base	1.6	49	0.045	0.052	24/DC	Vac...2	Flying leads, 0.5 m	USP	20113512
									FDA	20113543
	UNF ¼"- 28	1.6	33	0.03	0.035	24/DC	0...2	Flying leads, 0.5 m	USP	20113514
									FDA	20113545
	G ⅛	1.6	54	0.05	0.058	24/DC	Vac...2	Flying leads, 0.5 m	USP	20113513
									FDA	20113544
CF T 3/2-way solenoid valve Direct-acting Flow direction optional Universal 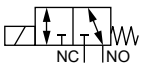	Sub-base	1.6	49	0.045	0.052	24/DC	Vac...2	Flying leads, 0.5 m	USP	20113515
									FDA	20113546
	UNF ¼"- 28	1.6	33	0.03	0.035	24/DC	0...2	Flying leads, 0.5 m	USP	20113517
									FDA	20113550
	G ⅛	1.6	54	0.05	0.054	24/DC	Vac...2	Flying leads, 0.5 m	USP	20113516
									FDA	20113549

1.) Pressure data: overpressure to atmospheric pressure

7.5. Ordering chart accessories

Cable plug Type 1054

Accessories	Description	Article no.
	Cable plug without cable (Type 1054)	006699
	Cable plug with cable, cable length: 3 m (Type 1054)	413552

Rectangular cable plug Type 2505

Note:
For further variants see data sheet **Type 2505** ▶.

Accessories	Description	Article no.
	Cable plug 10 mm with cable, 2-pin, rectangular plug, straight, cable length: 3 m (Type 2505)	252572
	Cable plug 10 mm with cable, 2-pin, rectangular plug, straight, cable length: 5 m (Type 2505)	255194
	Cable plug 10 mm with cable, 2-pin, rectangular plug, straight, cable length: 0.3 m (Type 2505)	644068
	Cable plug 10 mm with cable, 2-pin, rectangular plug, straight, cable length: 0.6 m (Type 2505)	162144
	Cable plug 10 mm, 2-pin, rectangular plug, straight (Type 2505)	644067

Fittings and hoses

Accessories	Description	Article no.
	Fittings and hoses for UNF connections and hoses see type **Type TVU003** ▶.	see data sheet **TVU003** ▶

DTS 1000010673 EN Version: - Status: RL (released | freigegeben | valide) printed: 28.10.2026

DTS 1000010673 EN Version: - Status: RL (released | freigegeben | valide) printed: 28.10.2026

Multiple manifolds for Bürkert sub-base interface, 2-way

Note:

- Dimensions in mm
- Port connection: UNF ¼"- 28
- Material: PEEK
- Pay attention to screw protrusion.
- Other variants are available on request.

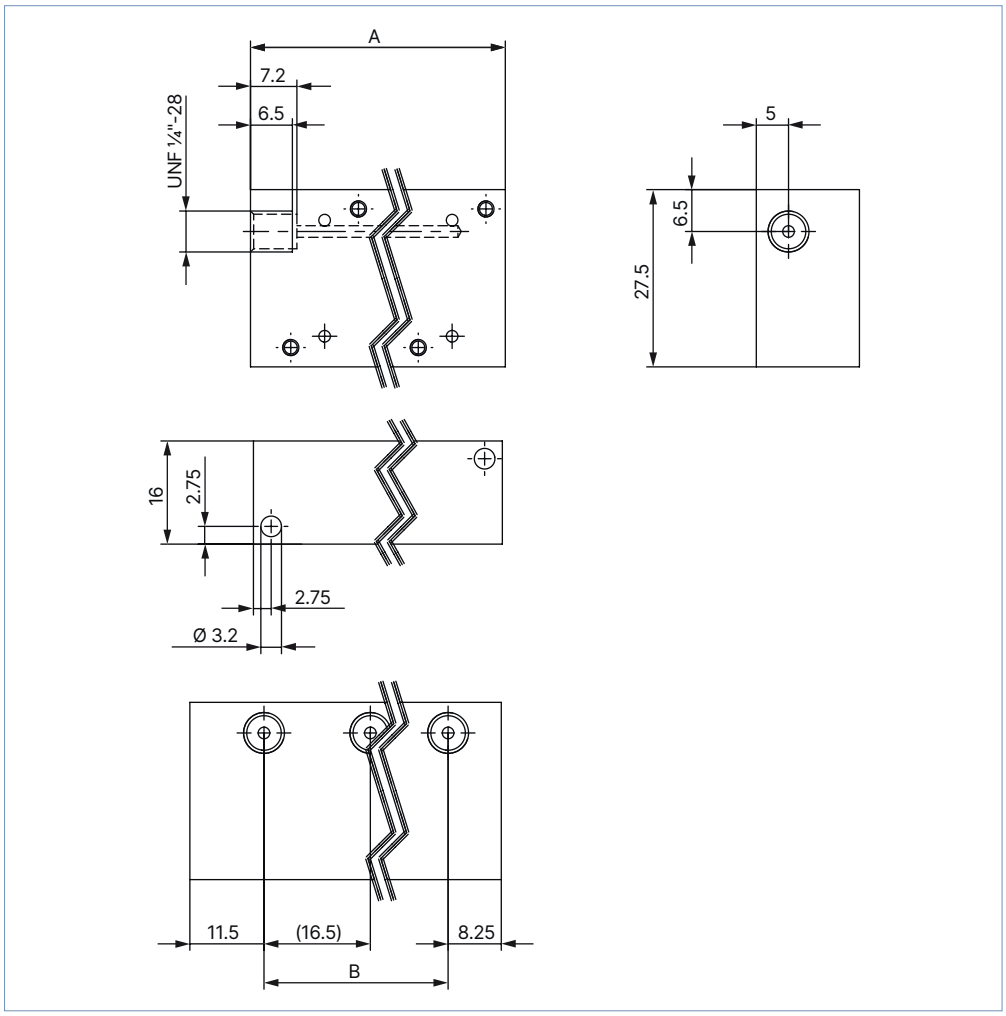

Manifold	A	B	n	Article no.
2-fold	36.25	16.5	2	651506
3-fold	52.75	33	3	651510
4-fold	69.25	49.5	4	651507
5-fold	85.75	66	5	651508
6-fold	102.25	82.5	6	651509
7-fold	118.75	99	7	651521
8-fold	135.25	115.5	8	651522

Note:

- Dimensions in mm
- Port connection: G ⅛
- Material: PPS
- Pay attention to screw protrusion.
- Other variants are available on request.

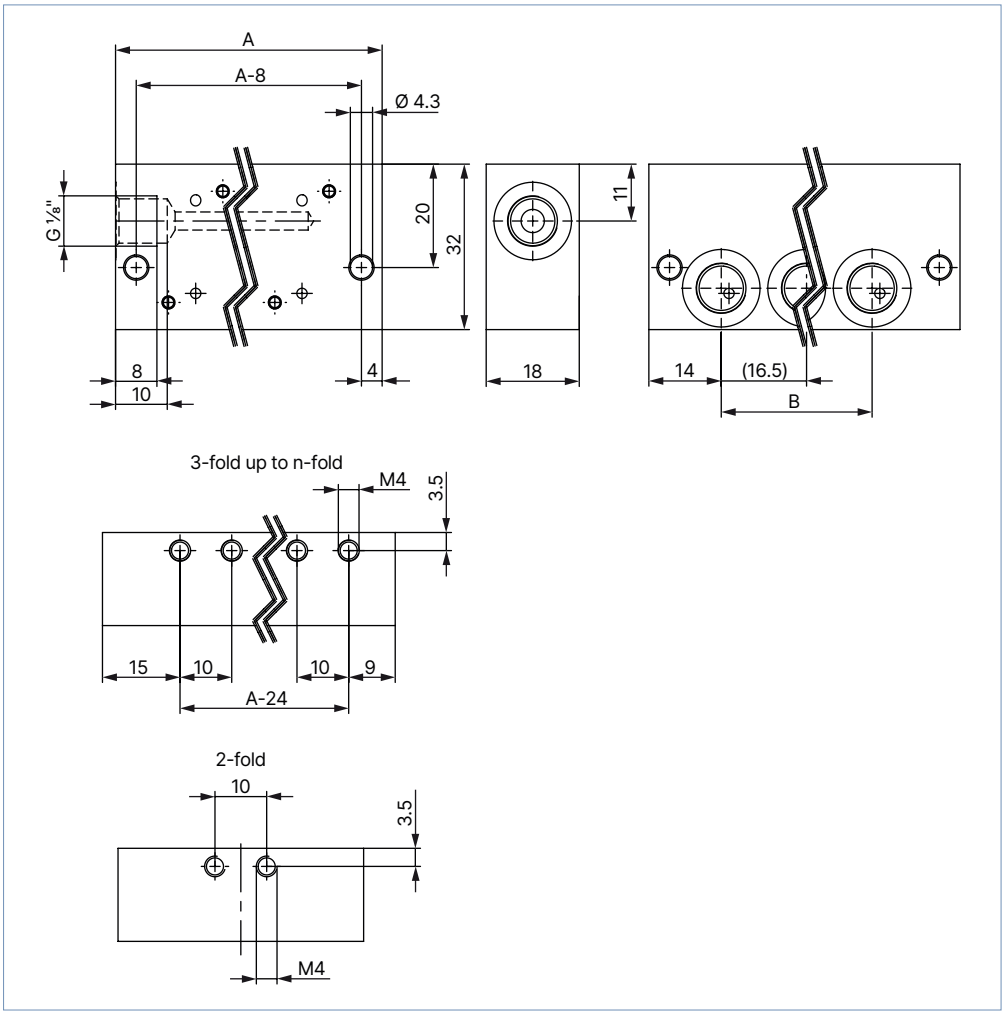

Manifold	A	B	n	Article no.
2-fold	47.5	16.5	2	675628
3-fold	64	33	3	675629
4-fold	80.5	49.5	4	675630
5-fold	97	66	5	675631
6-fold	113.5	82.5	6	675632
7-fold	130	99	7	675633
8-fold	146.5	115.5	8	675634
9-fold	163	132	9	675635
10-fold	179.5	148.5	10	675636

DTS 1000010673 EN Version: - Status: RL (released | freigegeben | valide) printed: 28.10.2026

DTS 1000010673 EN Version: - Status: RL (released | freigegeben | valide) printed: 28.10.2026

Multiple manifolds for Bürkert sub-base interface, 3-way

Note:

- Dimensions in mm
- Port connection 1: G ⅛
- Port connection 2: M5
- Material: aluminium (black anodized)
- Pay attention to screw protrusion.
- Other variants are available on request.

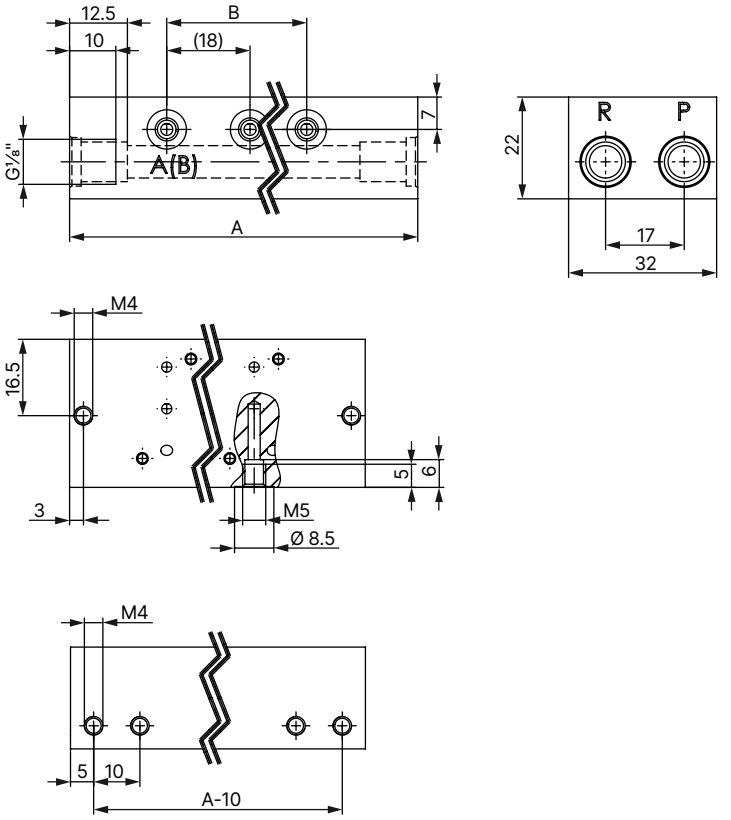

Manifold	A	B	n	Article no.
2-fold	63	18	2	658695
3-fold	81	36	3	658696
4-fold	99	54	4	658697
5-fold	117	72	5	658698
6-fold	135	90	6	658699
8-fold	171	126	8	658700
10-fold	207	162	10	658701
12-fold	243	198	12	658703

Single manifolds for Bürkert sub-base interface, 3-way

Note:

- Dimensions in mm
- Port connection: M5
- Material: aluminium (black anodized)
- Pay attention to screw protrusion.
- Other variants are available on request.

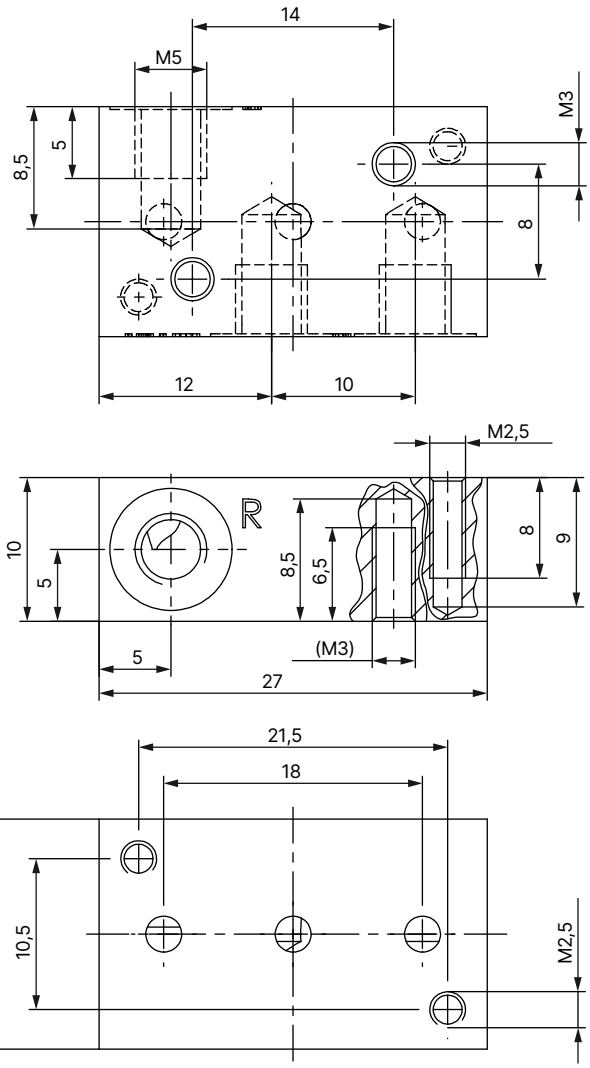

Manifold	Article no.
1-fold	623873

DTS 1000010673 EN Version: - Status: RL (released | freigegeben | valide) printed: 28.10.2026

Note:

- Dimensions in mm
- Port connection: G ⅛
- Material: aluminium (black anodized)
- Pay attention to screw protrusion.
- Other variants are available on request.

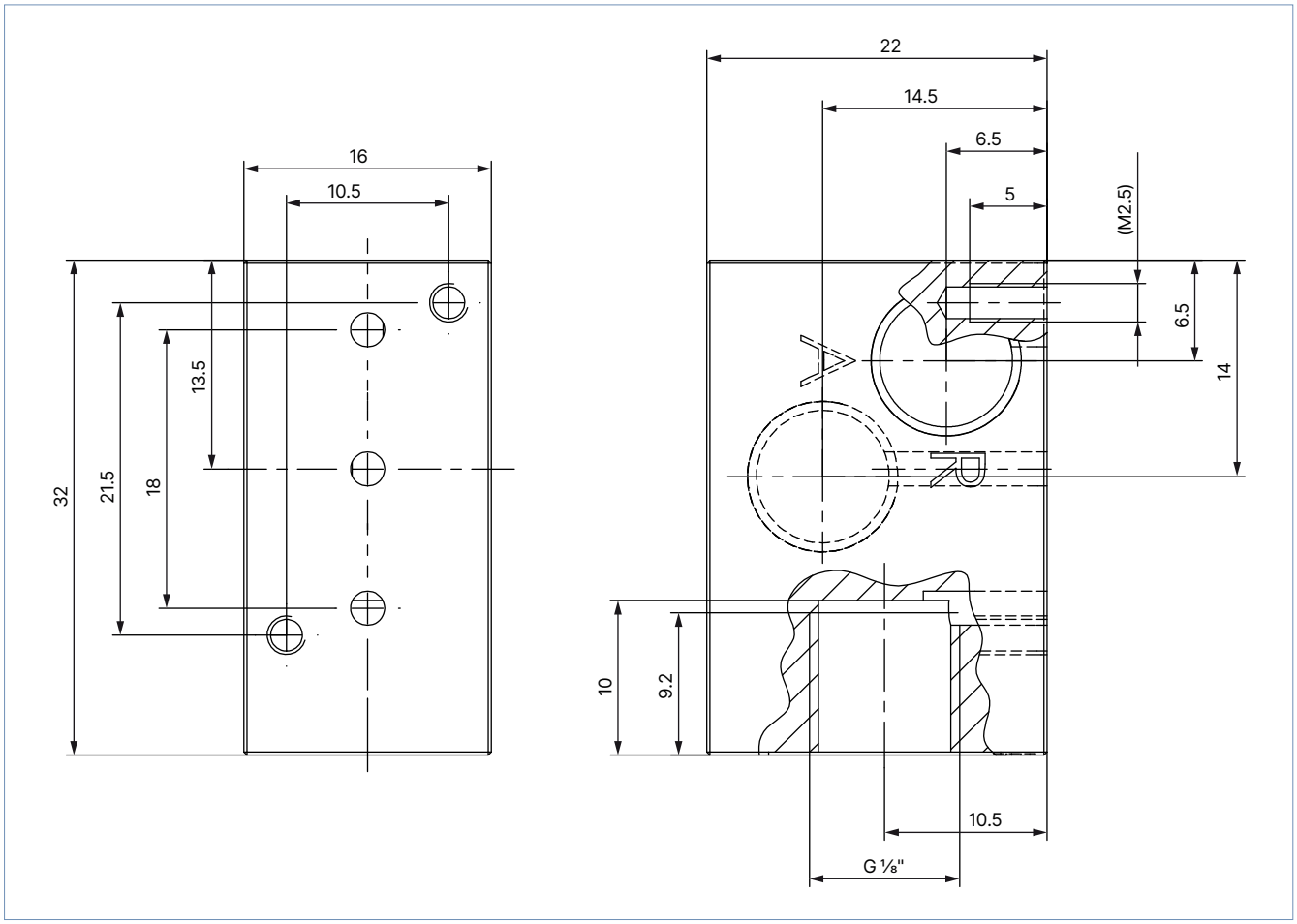

Manifold	Article no.
1-fold	634917

DTS 1000010673 EN Version: - Status: RL (released | freigegeben | valide) printed: 28.10.2026