





3/2-way flipper solenoid valve, direct-acting

- Direct-acting
- 0...10 bar
- Low power consumption
- Standard variant, Ex ia variant, latching variant
- 10 mm installation width / 11 mm width/station

Product variants described in the data sheet may differ from the product presentation and description.

Can be combined with



Type 6524
3/2-way or 2 × 3/2-way solenoid valve for pneumatic applications



Type 2505
10 mm socket for Bürkert small solenoid valves

Type description

Type 6144 is a direct-acting 3/2-way solenoid valve designed for neutral gases and liquids. Through the movement between the two end positions, the switching element (flipper) seals one of the two opposing valve seats and connects the other to the working port. This movement is caused by the magnetic field pushing a permanent magnet, which is fixed to the flipper element, when switching the solenoid. This valve design makes it possible to realise both monostable and bistable variants. In addition to its exceptional performance characteristics, the flipper principle is especially marked by its very low switching noise and low wear level. Furthermore, integrated medium separation enables use above and beyond pneumatic applications. Depending on the application, various flange connections are available that are suitable for both individual and block installation. Installation advice: The valve must be at least 5 mm away from other ferromagnetic materials in order to avoid malfunctioning during operation.

DTS 1000090354 EN Version: - Status: RL (released | freigegeben | valide) printed: 28.10.2026

© Christian Bürkert GmbH & Co. KG, subject to change without notice

Visit product website

Table of contents

1. General technical data 3

2. Product variants 4

2.1. Electrical connection variants ... 4
2.2. Fluidic connection variants ... 4
2.3. Manual override ... 5

3. Circuit functions 5

4. Approvals and conformities 6

4.1. General notes ... 6
4.2. Conformity ... 6
4.3. Standards ... 6
4.4. Explosion protection ... 6
4.5. North America (USA/Canada) ... 6
4.6. Others ... 6
China Compulsory Certification (CCC) ... 6

5. Materials 7

5.1. Bürkert resistApp ... 7
5.2. Material specifications ... 7

6. Dimensions 8

6.1. Bürkert sub-base (10 × 18 mm) ... 8
6.2. Bürkert sub-base vertical (10 × 32 mm) ... 9
6.3. Bürkert sub-base lateral (10 × 42 mm) ... 10
6.4. Bürkert sub-base horizontal (26 × 41 mm) ... 11

7. Product connections 12

7.1. Electrical connection ... 12
Pin assignment ... 12

8. Performance specifications 12

8.1. Electrical data explosion-proof variant Ex ia ... 12

9. Ordering information 13

9.1. Bürkert eShop ... 13
9.2. Bürkert product filter ... 13
9.3. Bürkert Product Enquiry Form ... 13
9.4. Ordering chart ... 14
Standard variant ... 14
ATEX/IECEx ia variant ... 15
Latching variant ... 15
9.5. Ordering chart accessories ... 16
Cable plug Type 2505 ... 16
9.6. Single manifold for Bürkert sub-base (10 × 18 mm) ... 16
9.7. Multiple manifold for Bürkert sub-base (10 × 18 mm) ... 17
9.8. Single manifold for Bürkert sub-base lateral (10 × 42 mm) ... 17
9.9. Multiple manifold for Bürkert sub-base lateral (10 × 42 mm) ... 18

DTS 1000090354 EN Version: - Status: RL (released | freigegeben | valide) printed: 28.10.2026

DTS 1000090354 EN Version: - Status: RL (released | freigegeben | valide) printed: 28.10.2026

1. General technical data

Product properties	
Dimensions	Further information can be found in chapter "6. Dimensions" on page 8.
Material	
Seal	FKM (other materials on request)
Valve body	PPS
Minimum bending radius for flying leads variant	Single bending: 8.5 mm radius
Orifice	DN 0.6
Circuit function	C, D and T, monostable K and S, bistable Further information can be found in chapter "3. Circuit functions" on page 5.
Performance data	
Duty cycle	100 % continuous operation
Switching time [1.]	
Standard variant	Opening: approx. 8 ms (pressure rise 0...10 %) Closing: approx. 10 ms (pressure drop 100...90 %)
Explosion-proof variant	Opening: approx. 14 ms (pressure rise 0...10 %) Closing: approx. 18 ms (pressure drop 100...90 %)
Electrical data	
Operating voltage [2.]	12 V DC, 24 V DC (other voltages on request)
Electrical control	Possible with PLC
Nominal power	
Standard variant	0.8 W
Latching variant	Switching 0.8 W (pulse length minimum 50 ms), holding power 0 W
Switching frequency [4.]	Approx. 17 Hz
Voltage tolerance [3.]	± 10 %
Medium data	
Operating medium	Lubricated or oil-free compressed dry air, neutral gases and liquids (5 µm filtering) (see chapter "5.1. Bürkert resistApp" on page 7)
Medium temperature	-10 °C...+ 55 °C
Product connections	
Electrical connection	Cable plug **Type 2505** ▶ Further information can be found in chapter "Cable plug Type 2505" on page 16. Two FEP-leads 0.2 mm² (AWG24), length 500 mm (round plug M8 × 1 or PCB plug RM 5.08 mm on request)
Port connection	Bürkert sub-base (10 × 18 mm) Bürkert sub-base vertical (10 × 32 mm) Bürkert sub-base lateral (10 × 42 mm) Bürkert sub-base horizontal (26 × 41 mm) UNF ¼"- 28 Hose connector
Approvals and conformities	
Degree of protection	IP65 with flying leads IP30
Protection class	III according to VDE 0580
Explosion protection	Further information can be found in chapter "4.4. Explosion protection" on page 6.
North America (USA/Canada)	Further information can be found in chapter "4.5. North America (USA/Canada)" on page 6.
Others	Further information can be found in chapter "4.6. Others" on page 6.
Environment and installation	
Installation position	As required, preferably with actuator upright (5 mm minimum distance to ferromagnetic materials)
Ambient temperature	-10 °C...+ 55 °C

1.) Measurement at + 20 °C, 6 bar at the valve outlet according to DIN ISO 12238:2001
2.) Battery voltage, observe polarity as shown on top of the valve
3.) Maximum permitted residual ripple
4.) At ambient temperature + 20 °C

2. Product variants

2.1. Electrical connection variants

Note:

- Rectangular plug as standard
- Other connections are available on request.

Rectangular plug Type 2505	2 FEP flying leads 0.2 mm², AWG24, length on request	PCB plug (RM 5.08 mm) (e.g. for PCB mounting 0.63 × 0.63)	Round plug M8 × 1
			

2.2. Fluidic connection variants

Note:

The materials of the fluidic connections may differ from the valve body material mentioned in chapter "1. General technical data" on page 3.

Bürkert sub-base (10 × 18 mm)	Bürkert sub-base vertical (10 × 32 mm)	Bürkert sub-base lateral (10 × 42 mm)
		
Bürkert sub-base horizontal (26 × 41 mm)	**UNF ¼"- 28**	**Hose connector**
		

DTS 1000090354 EN Version: - Status: RL (released | freigegeben | valide) printed: 28.10.2026

2.3. Manual override

Manual override standard	Manual override with additional over-rotation protection	Without manual override
		

3. Circuit functions

Symbol	Description
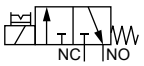	**Circuit function C (CF C)** 3/2-way solenoid valve Direct-acting, with manual override Normally closed
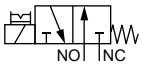	**Circuit function D (CF D)** 3/2-way solenoid valve Direct-acting, with manual override Normally open
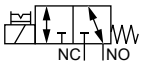	**Circuit function T (CF T)** 3/2-way solenoid valve Direct-acting, with manual override Flow direction optional Universal
	**Circuit function K (CF K)** 3/2-way latching solenoid valve Direct-acting Observe flow direction [1.)]
	**Circuit function S (CF S)** 3/2-way latching solenoid valve Direct-acting Flow direction unrestricted

1.) Further information can be found in chapter "Pin assignment" on page 12.

DTS 1000090354 EN Version: - Status: RL (released | freigegeben | valide) printed: 28.10.2026

4. Approvals and conformities

4.1. General notes

- The approvals and conformities listed below must be stated when making enquiries. This is the only way to ensure that the product complies with all required specifications.
- Not all available variants can be supplied with the below mentioned approvals or conformities.

4.2. Conformity

In accordance with the Declaration of Conformity, the product is compliant with the EU Directives.

4.3. Standards

The applied standards which are used to demonstrate compliance with the EU Directives are listed in the EU-Type Examination Certificate and/or the EU Declaration of Conformity.

4.4. Explosion protection

Approval	Description
	Optional: Explosion protection EU type examination certificate: PTB 07 ATEX 2048 X / IECEx PTB 07.0063X **ATEX:** II 2G Ex ia IIC T4...T6 Gb **IECEx:** Ex ia IIC T4...T6 Gb

4.5. North America (USA/Canada)

Approval	Description
	Optional: UL Recognized for the USA and Canada [1.)] The products are UL Recognized for the USA and Canada according to: • UL 429 (electrically operated valves) • CAN/CSA-C22.2 No. 139 - 19

1.) This device is intended to be used with a NEC Class 2 power source or NEC Class 2 transformer in accordance with UL1310 or UL1585.

4.6. Others

China Compulsory Certification (CCC)

Conformity	Description
	Optional: China Compulsory Certification (CCC) The products with Ex approval are suitable for import and use for hazardous applications in China.

DTS 1000090354 EN Version: - Status: RL (released | freigegeben | valide) printed: 28.10.2026

5. Materials

5.1. Bürkert resistApp

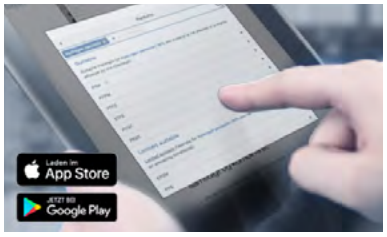

Bürkert resistApp – Chemical resistance chart

You want to ensure the reliability and durability of the materials in your individual application case? Verify your combination of media and materials on our website or in our resistApp.

Start chemical resistance check

5.2. Material specifications

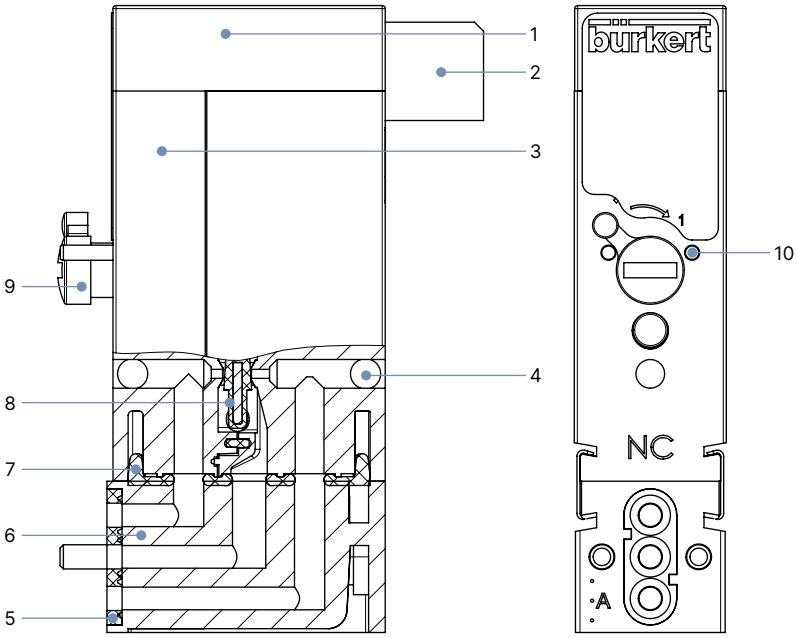

No.	Element	Material
1	Casting compound	Thermelt
2	Plug (symbolic illustration for all cable connections; other variants on request)	PA
3	Housing	PPS
4	Ball	Stainless steel 1.4301
5	Seal	FKM
6	Port connection (symbolic illustration for all port connections; other variants on request)	PA, PPS, PEEK
7	Sealing gasket	FKM, EPDM
8	Sealing element	FKM, EPDM
9	Manual override	PA
10	Additional over-rotation protection	Stainless steel 1.4305

DTS 1000090354 EN Version: - Status: RL (released | freigegeben | valide) printed: 28.10.2026

6. Dimensions

6.1. Bürkert sub-base (10 × 18 mm)

Note:

- Dimensions in mm
- The valve is optionally available with or without a manual override (left or right-sided) (standard position: opposite electrical connection).

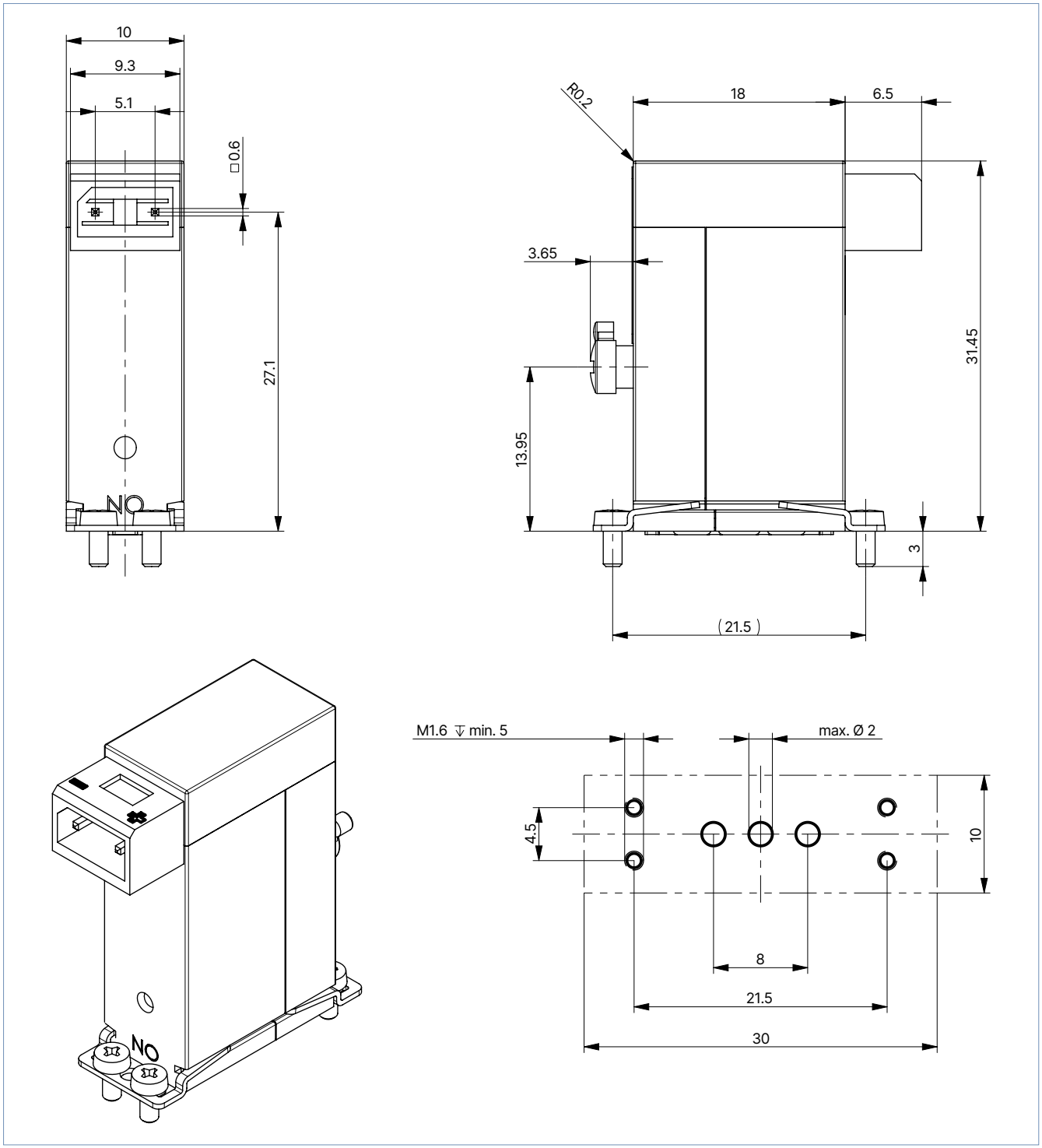

DTS 1000090354 EN Version: - Status: RL (released | freigegeben | valide) printed: 28.10.2026

6.2. Bürkert sub-base vertical (10 × 32 mm)

Note:

- Dimensions in mm
- The valve is optionally available with or without a manual override (left or right-sided) (standard position: opposite electrical connection).

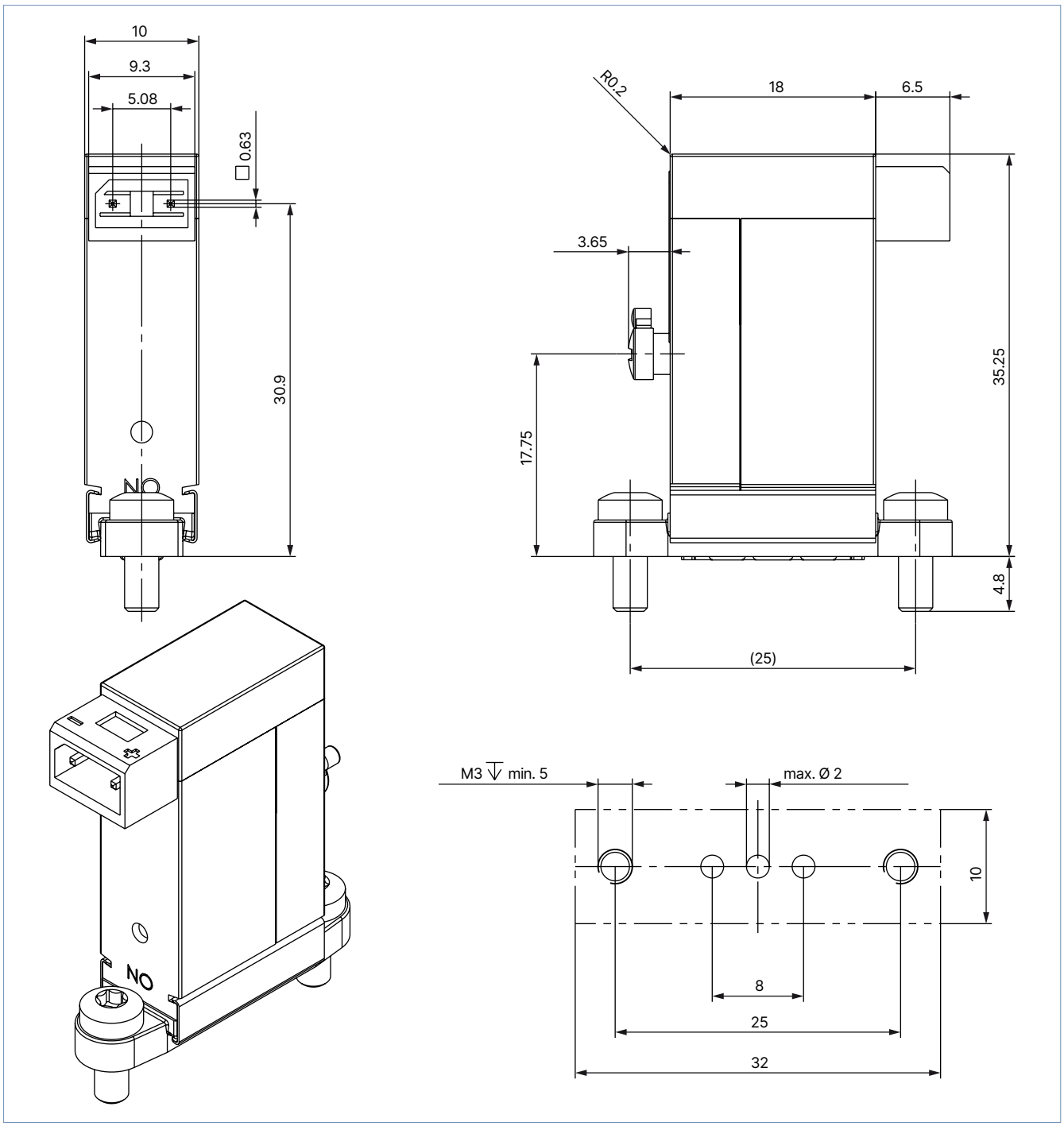

DTS 1000090354 EN Version: - Status: RL (released | freigegeben | valide) printed: 28.10.2026

6.3. Bürkert sub-base lateral (10 × 42 mm)

Note:

- Dimensions in mm
- The valve is optionally available with or without a manual override (left or right-sided) (standard position: opposite electrical connection).

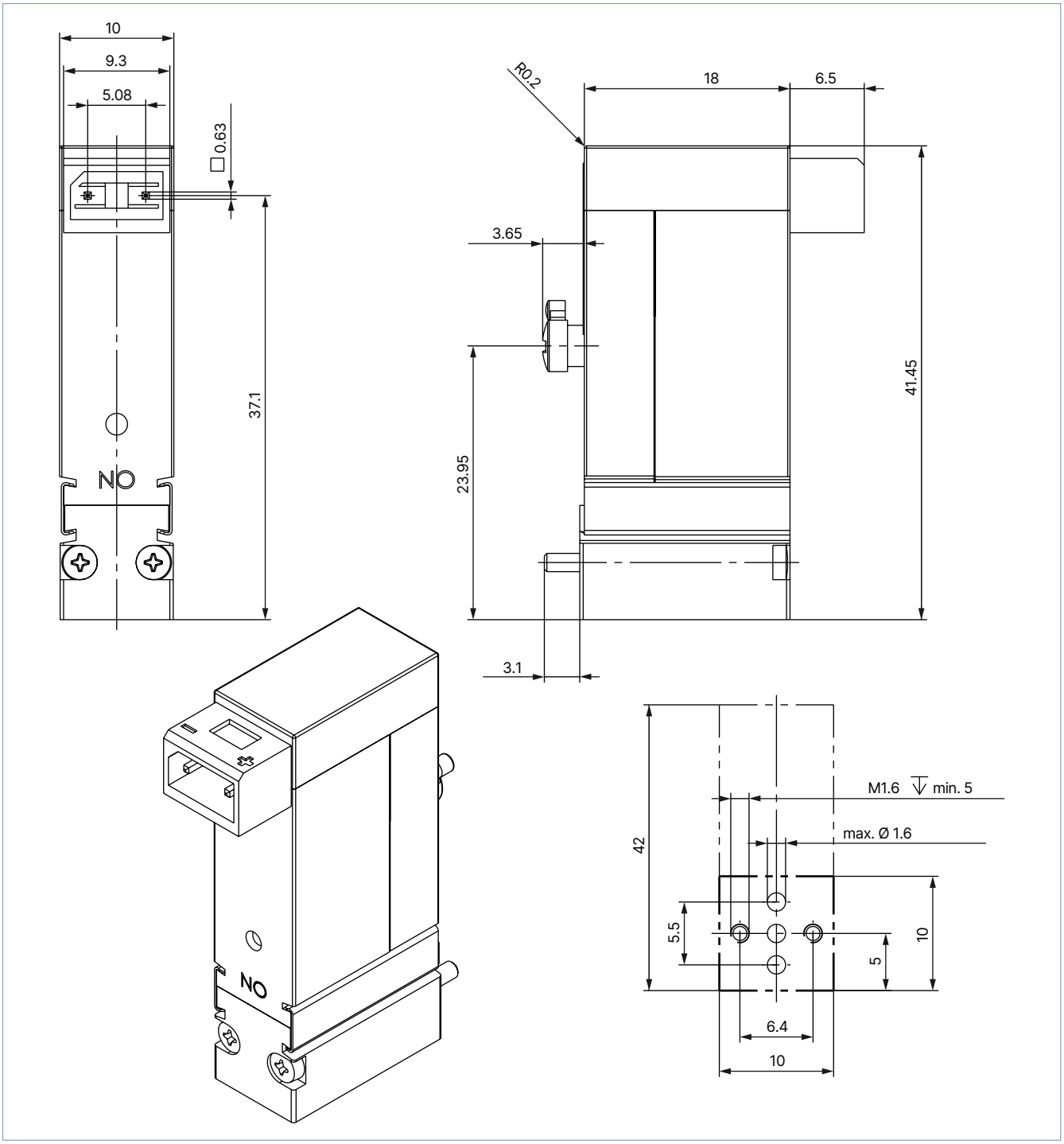

DTS 1000090354 EN Version: - Status: RL (released | freigegeben | valide) printed: 28.10.2026

6.4. Bürkert sub-base horizontal (26 × 41 mm)

Note:

- Dimensions in mm
- The valve is optionally available with or without a manual override (left or right-sided) (standard position: opposite electrical connection).

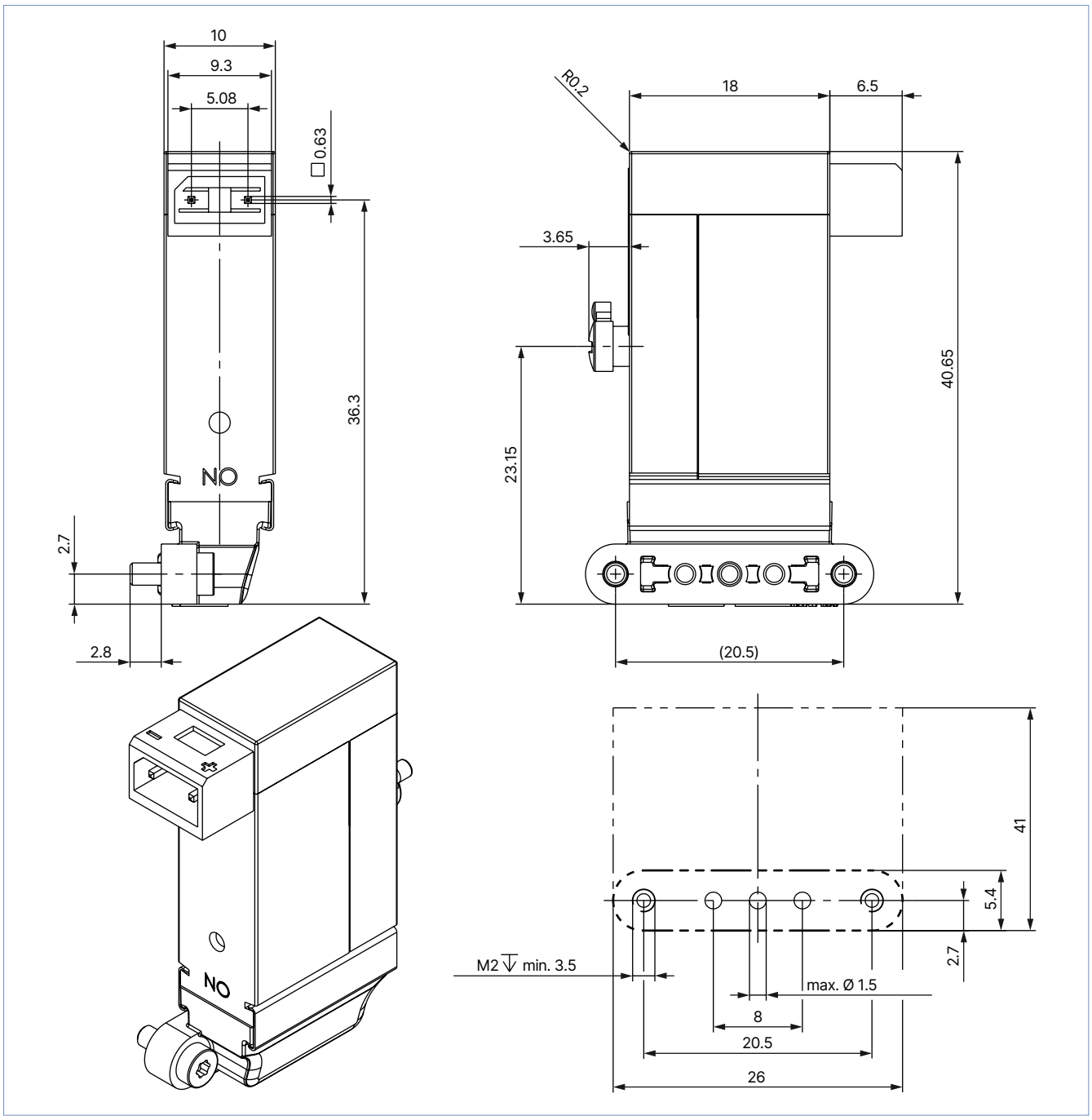

DTS 1000090354 EN Version: - Status: RL (released | freigegeben | valide) printed: 28.10.2026

7. Product connections

7.1. Electrical connection

Pin assignment

Electrical control for latching variants		Pulse length min. 50 ms		
		1	2	
CF K 3/2-way latching solenoid valve Direct-acting Observe flow direction 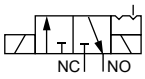	NC → COM (open)	+	–	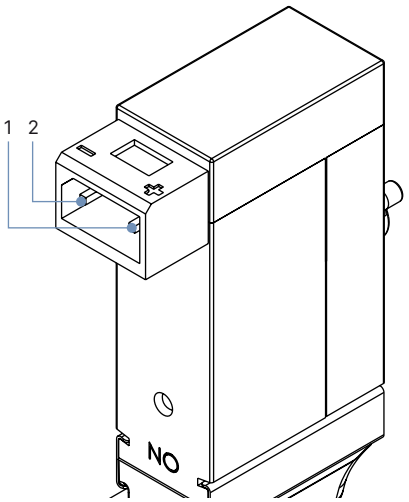
	COM → NO (open)	–	+	
CF S 3/2-way latching solenoid valve Direct-acting Flow direction unrestricted 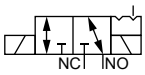	NC ↔ COM (open)	+	–	
	COM ↔ NO (open)	–	+	

8. Performance specifications

8.1. Electrical data explosion-proof variant Ex ia

Note:

- The valve is designed to operate on 24 V DC outputs through an intermediary intrinsically safe apparatus (isolating block or barrier).
- Refer to the **additional instructions Type 6144** ▶ for the permissible maximum values/value pairs.
- Type of protection: PTB 07 ATEX 2048 X, II 2G Ex ia IIC T4...T6 Gb
  IECEx PTB 07.0063X, Ex ia IIC T4...T6 Gb

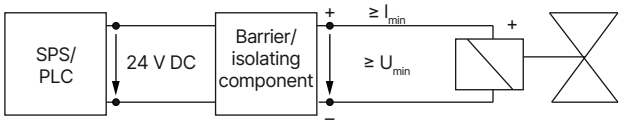

Variant	Resistance at + 20 °C ± 4 %	Minimum terminal voltage	Minimum current
	[Ω]	[V]	[mA]
For use with a 300 Ω supply module	320	9.3	29
High resistance variant	510	11.7	23

DTS 1000090354 EN Version: - Status: RL (released | freigegeben | valide) printed: 28.10.2026

9. Ordering information

9.1. Bürkert eShop



Bürkert eShop – Easy ordering and quick delivery

You want to find your desired Bürkert product or spare part quickly and order directly? Our online shop is available for you 24/7. Sign up and enjoy all the benefits.

Order online now

9.2. Bürkert product filter



Bürkert product filter – Get quickly to the right product

You want to select products comfortably based on your technical requirements?
Use the Bürkert product filter and find suitable articles for your application quickly and easily.

Try out our product filter

9.3. Bürkert Product Enquiry Form

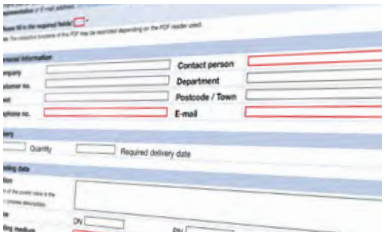

Bürkert Product Enquiry Form – Your enquiry quickly and compactly

Would you like to make a specific product enquiry based on your technical requirements? Use our Product Enquiry Form for this purpose. There you will find all the relevant information for your Bürkert contact. This will enable us to provide you with the best possible advice.

Fill out the form now

DTS 1000090354 EN Version: - Status: RL (released | freigegeben | valide) printed: 28.10.2026

9.4. Ordering chart

Standard variant

Note:

- Including fastening screws for Bürkert sub-base: 4 x M1.6 × 3.5; Bürkert sub-base lateral: 2 x M1.6 × 20 and Bürkert sub-base horizontal: 2 x M2 × 6
- Rectangular cable plug Type 2505 is not included in the scope of delivery and must be ordered separately, see "9.5. Ordering chart accessories" on page 16.
- Other variants are available on request.

Circuit function	Port connection	Orifice	Q_{Nn} value air	K_V value water	Voltage/ Frequency	Nominal power	Pressure range	Manual override standard	Electrical connection	Article no.
		[mm]	[l/min] 1.)	[m³/h] 2.)	[V/Hz]	[W]	[bar] 3.)			
CF C 3/2-way solenoid valve Direct-acting, with manual override Normally closed 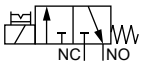	Bürkert sub-base	0.6	8.5	0.0075	12/DC	0.8	0...10 4.)	yes	Rectangular plug	182862
									Flying leads 0.5 m	215686
					24/DC				Rectangular plug	181367
									Flying leads 0.5 m	202578
	Bürkert sub-base lateral								Rectangular plug	175682
									Flying leads 0.5 m	214196
	Bürkert sub-base horizontal								Rectangular plug	357406
									Flying leads 0.5 m	o. r.
CF D 3/2-way solenoid valve Direct-acting, with manual override Normally open 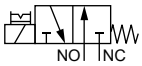	Bürkert sub-base	0.6	8.5	0.0075	24/DC	0.8	0...10	yes	Rectangular plug	175653
									Flying leads 0.5 m	o. r.
	Bürkert sub-base lateral								Rectangular plug	179098
									Flying leads 0.5 m	o. r.
	Bürkert sub-base horizontal								Rectangular plug	357407
									Flying leads 0.5 m	o. r.
CF T 3/2-way solenoid valve Direct-acting, with manual override Flow direction optional Universal 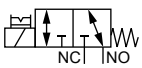	Bürkert sub-base	0.6	8.5	0.0075	24/DC	0.8	0...3 4.)	yes	Rectangular plug	215276
									Flying leads 0.5 m	o. r.
	Bürkert sub-base lateral								Rectangular plug	20099067
									Flying leads 0.5 m	o. r.
	Bürkert sub-base horizontal								Rectangular plug	20099069
									Flying leads 0.5 m	o. r.

o. r. = on request

1.) Measurement at + 20 °C, 6 bar at the valve inlet and 1 bar differential pressure

2.) Measurement at + 20 °C, 1 bar at the valve inlet and free outlet

3.) Pressure data: overpressure to atmospheric pressure

4.) Application with vacuum are available on request.

DTS 1000090354 EN Version: - Status: RL (released | freigegeben | valide) printed: 28.10.2026

ATEX/IECEx ia variant

Note:

- Including fastening screws for Bürkert sub-base: M1.6 × 3.5
- Rectangular cable plug Type 2505 is not included in the scope of delivery and must be ordered separately, see "9.5. Ordering chart accessories" on page 16.

Circuit function	Port connection	Orifice	Q_{Nn} value air	K_V value water	Pressure range	Manual override standard	Resistance at +20 °C ± 4 %	Minimum holding current	Article no.
		[mm]	[l/min] 1.)	[m³/h] 2.)	[bar] 3.)		[Ω]	[mA]	
CF C 3/2-way solenoid valve Direct-acting, with manual override Normally closed 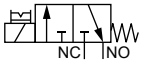	Bürkert sub-base	0.6	8.5	0.0075	0...7	yes	320	29	175657
							510	23	175656

1.) Measurement at + 20 °C, 6 bar at the valve inlet and 1 bar differential pressure
2.) Measurement at + 20 °C, 1 bar at the valve inlet and free outlet
3.) Pressure data: overpressure to atmospheric pressure

Latching variant

Note:

- Including fastening screws for Bürkert sub-base: M1.6 × 3.5
- Rectangular cable plug Type 2505 is not included in the scope of delivery and must be ordered separately, see "9.5. Ordering chart accessories" on page 16.
- Latching variants without manual override

Circuit function	Port connection	Orifice	Q_{Nn} value air	K_V value water	Voltage/ Frequency	Nominal power	Pressure range	Electrical connection	Article no.
		[mm]	[l/min] 1.)	[m³/h] 2.)	[V/Hz]	[W]	[bar] 3.)		
CF K 3/2-way latching solenoid valve Direct-acting Observe flow direction 4.) 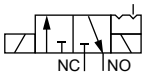	Bürkert sub-base	0.6	8.5	0.0075	24/DC	Switch 0.8 watts, hold 0 watt	0...10	Rectangular plug	175655
	Bürkert sub-base lateral							Rectangular plug	20028496
	Bürkert sub-base vertical							Rectangular plug	20097121
CF S 3/2-way latching solenoid valve Direct-acting Flow direction unrestricted 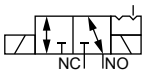	Bürkert sub-base	0.6	8.5	0.0075	24/DC	Switch 0.8 watts, hold 0 watt	0...3	Rectangular plug	20097125
	Bürkert sub-base lateral							Rectangular plug	20097131
	Bürkert sub-base vertical							Rectangular plug	20097129

1.) Measurement at + 20 °C, 6 bar at the valve inlet and 1 bar differential pressure
2.) Measurement at + 20 °C, 1 bar at the valve inlet and free outlet
3.) Pressure data: overpressure to atmospheric pressure
4.) Further information can be found in chapter "Pin assignment" on page 12.

DTS 1000090354 EN Version: - Status: RL (released | freigegeben | valide) printed: 28.10.2026

Further variants on request	
Additional The valve can be supplied with a manual override on the left or right side, or without manual override on request.	**Electrical connection** Electrical connection can be supplied either on the left or right side. Possible electrical connections are 2 single flying leads, round plug M8 × 1 or plug for PCB contact.
Approval Further information can be found in chapter "4. Approvals and conformities" on page 6.	**Control function/Circuit function** Further information can be found in chapter "3. Circuit functions" on page 5.

9.5. Ordering chart accessories

Cable plug Type 2505

Note:
For further variants see data sheet **Type 2505** ▶.

Accessories	Description	Article no.
	Cable plug 10 mm with cable, 2-pin, rectangular plug, straight, cable length: 3 m (Type 2505)	252572
	Cable plug 10 mm with cable, 2-pin, rectangular plug, straight, cable length: 5 m (Type 2505)	255194
	Cable plug 10 mm with cable, 2-pin, rectangular plug, straight, cable length: 0,3 m (Type 2505)	644068
	Cable plug 10 mm with cable, 2-pin, rectangular plug, straight, cable length: 0.6 m (Type 2505)	162144

9.6. Single manifold for Bürkert sub-base (10 × 18 mm)

Note:

- Dimensions in mm
- Port connection M3
- Material aluminium (black anodized)

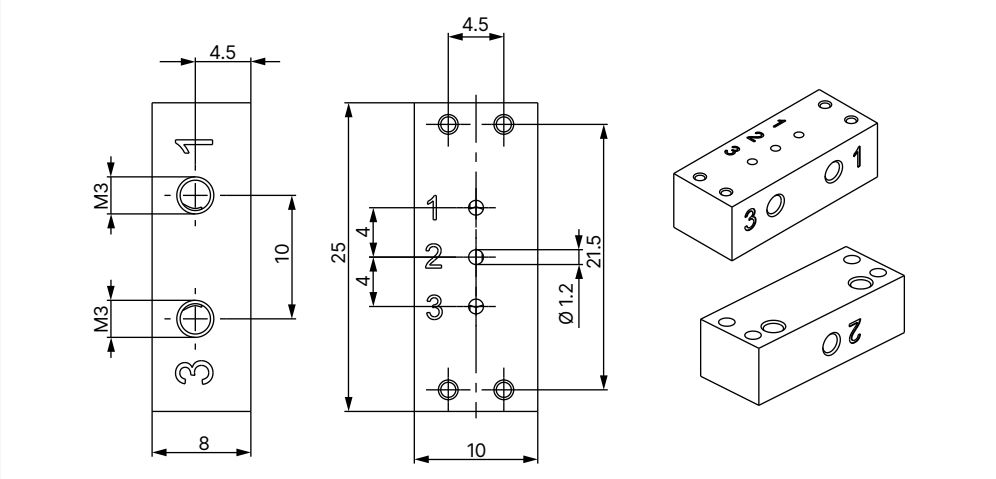

Description	Article no.
Single manifold for Bürkert sub-base	639873

DTS 1000090354 EN Version: - Status: RL (released | freigegeben | valide) printed: 28.10.2026

9.7. Multiple manifold for Bürkert sub-base (10 × 18 mm)

Note:

- Dimensions in mm
- Port connection M5
- Material aluminium (black anodized)

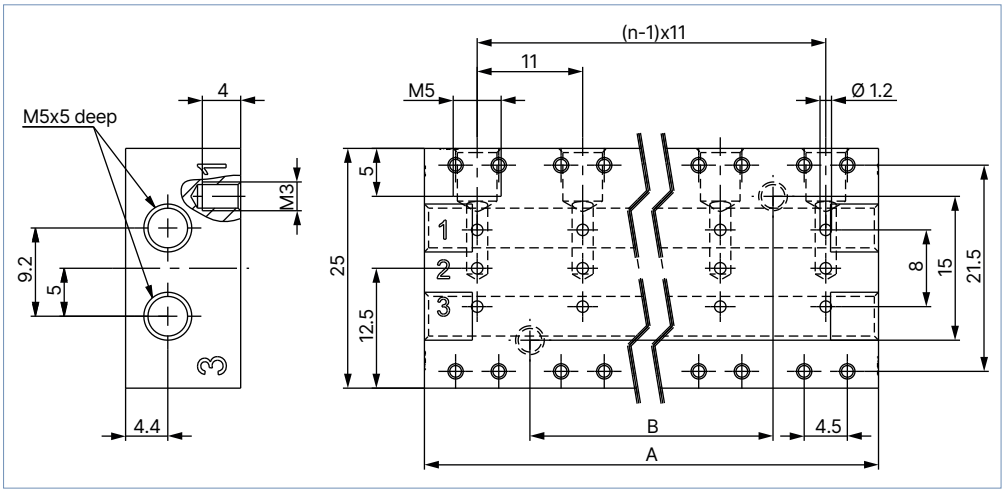

n	A	B	Article no.
2 valves	22	0 [1.)]	641911
4 valves	44	22	641912
6 valves	66	44	639874
Blanking plate kit			645512

1.) Drill holes are at the same height.

9.8. Single manifold for Bürkert sub-base lateral (10 × 42 mm)

Note:

- Dimensions in mm
- Port connection M3
- Material aluminium (black anodized)

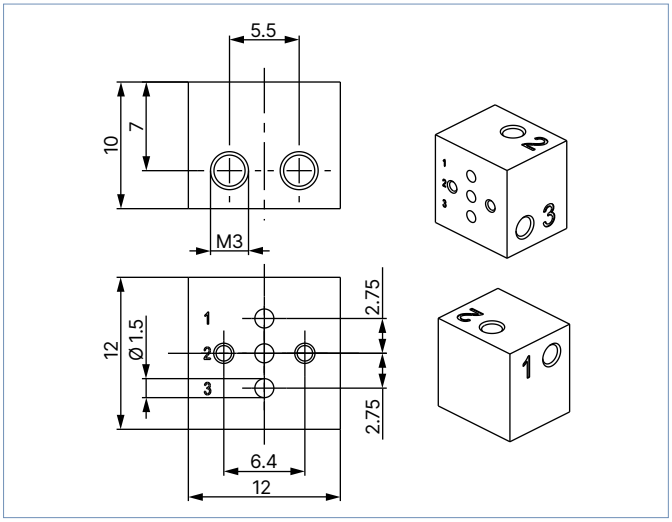

Description	Article no.
Single manifold for Bürkert sub-base lateral (10 × 42 mm)	639234

DTS 1000090354 EN Version: - Status: RL (released | freigegeben | valide) printed: 28.10.2026

9.9. Multiple manifold for Bürkert sub-base lateral (10 × 42 mm)

Note:

- Dimensions in mm
- Port connection M5
- Material aluminium (black anodized)
- Mounting hole: M3×4 thread

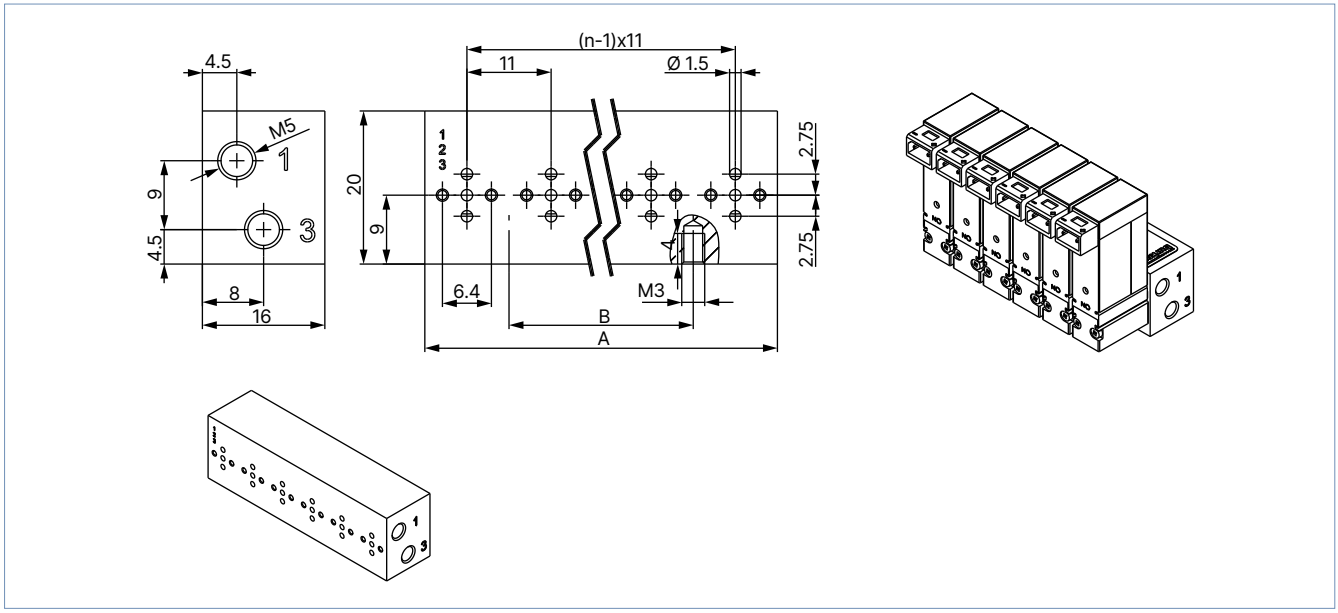

n	A	B	Article no.
2 valves	22	0 [1.)]	641915
4 valves	44	22	641916
6 valves	66	44	639235
Blanking plate kit			645513

1.) Drill holes are at the same height.

DTS 1000090354 EN Version: - Status: RL (released | freigegeben | valide) printed: 28.10.2026