







# 3/2- or 4/2-way solenoid valve for pneumatics

- Compact design in 3/2- and 4/2-way variant
- Extendable valve block
- Reduced power consumption
- Different pneumatic connections available
- Robust construction

Product variants described in the data sheet may differ from the product presentation and description.

## Can be combined with



**Type 2012** ▸
Pneumatically operated 2/2-way globe valve CLASSIC



**Type 2516** ▸
Cable plug, form C according to DIN EN 175301-803

## Type description

Valves of type 5470 consist of a type 6106 pilot rocker solenoid valve and a pneumatic valve. An armature with a tilting bearing, similar to a rocker, tilts within the body of the pilot valve, and switches the valve. The minimal tilting movement of the rocker is non-wearing, and basic lubrication is unnecessary. The type 5470 R is available as a 3/2 and 4/2-way valve. The valves can be mounted together individually using the module flange. In various applications, they can be used advantageously as valve blocks. Different variants are available for service ports 2 and 4.

DTS 1000390869 EN Version: - Status: RL (released | freigegeben | valide) printed: 28.10.2026


© Christian Bürkert GmbH & Co. KG, Subject to alteration

Visit product website ▸

# Table of contents


**1. General technical data 3**

**2. Circuit functions 4**

**3. Approvals and conformities 4**

3.1. General notes ... 4
3.2. Conformity ... 4
3.3. Standards ... 4
3.4. Explosion protection ... 4
3.5. North America (USA/Canada) ... 4

**4. Dimensions 5**

4.1. Port connection 1 ... 5
4.2. Port connection 2 (working ports) ... 5
4.3. Block installation with 18 mm extendable valves on a single base module ... 6
Assembly with plug contacts lateral ... 6
Assembly with plug contacts at top ... 7
4.4. Block installation with 19 mm extendable valves on pneumatic modules Type MP05 ... 7
Assembly with plug contacts lateral ... 7
Assembly with variants for supply connection with push-in coupling Ø 6 mm and threaded connection G ⅛ ... 8

**5. Product design and assembly 9**

5.1. Product assembly servo-assisted valve ... 9
Connection variants for port connection 1 ... 9
Connection variants for port connection 2 (working ports) ... 10
Electrical data explosion-proof variant Ex ia ... 11
Electrical connection with plug for extendable valves (cable plug Type 1057 for individual wiring) ... 11
5.2. Product assembly block mounting with 18 mm extendable valves on individual base module ... 12
Assembly with plug contacts lateral ... 12
Assembly with plug contacts at top ... 12
5.3. Product assembly block mounting with 19 mm extendable valves on pneumatic modules Type MP05 ... 13
Assembly with plug contacts lateral ... 13

**6. Ordering information 13**

6.1. Bürkert eShop ... 13
6.2. Bürkert product filter ... 13
6.3. Ordering chart ... 14
Extendable single valves with module flange for supply connections 1 (P) and 3 (R) with plug contacts at top ... 14
Extendable single valves with module flange for supply connections 1 (P) and 3 (R) with rectangular electrical connection ... 15
For valve island mounting, valves with plug contacts lateral; connection with integrated connector sockets on valve islands Type 8640 ... 16
Namur EExi 3/2 and 4/2-way solenoid valve for pneumatic ... 17
6.4. Ordering table accessories ... 17
Connection modules and accessories for valve blocks ... 17
Cable plug Type 2516, form C according to DIN EN 175301 - 803 ... 18
Further accessories ... 18


DTS 1000390869 EN Version: - Status: RL (released | freigegeben | valide) printed: 28.10.2026

DTS 1000390869 EN Version: - Status: RL (released | freigegeben | valide) printed: 28.10.2026

# 1. General technical data

| | |
|---|---|
| **Product properties** | |
| Dimensions | Further information can be found in chapter "4. Dimensions" on page 5. |
| **Material** | |
| Seal | NBR |
| Body | Polyamide |
| Inner valve parts | Ultramid |
| Weight | Approx. 120 g |
| Orifice | DN 4.0 |
| Pneumatic module | MP05 |
| Circuit function | C, D and G<br>Further information can be found in chapter "2. Circuit functions" on page 4. |
| **Performance data** | |
| Pressure range | 2...10 bar [1.)] |
| Duty cycle | 100 % continuous operation |
| Flow rate ($Q_{Nn}$ value air) [2.)] | 300 l/min |
| Switching time [3.)] | DC: Opening: 15 ms, closing: 12 ms<br>AC: Opening: 15 ms, closing: 20 ms |
| **Electrical data** | |
| Operating voltage | 24 V DC, 110...120 V DC, 220...240 V DC<br>For alternating voltage use valves with UC coil |
| Power consumption | Complies with the effective coil power in the ordering table<br>Further information can be found in chapter "6. Ordering information" on page 13. |
| Nominal power | 2...3 W<br>Solenoids with integrated rectifier, LED and varistor (UC variant) |
| Voltage tolerance | ± 10 % |
| **Medium data** | |
| Operating medium | Compressed air, neutral gases (5 µm filtration) |
| Medium temperature | - 10 °C...+ 50 °C |
| **Product connections** | |
| Electrical connection | • Plug contacts according to DIN EN 175301 - 803 form C for cable plug **Type 2516** ▶<br>Further information can be found in chapter "Cable plug Type 2516, form C according to DIN EN 175301 - 803" on page 18.<br>• Rectangular plug with 2 pins, raster 5.08 mm |
| **Pneumatic connection** | |
| Supply connection 1, 3 | Module flange |
| Working port 2, 4 (variants) | Thread G ⅛<br>Thread NPT ⅛<br>Hose fitting SL 6/4 mm<br>Plug-in coupling Ø 6 mm |
| **Approvals and conformities** | |
| Degree of protection | IP65 with leads or cable plug **Type 2516** ▶<br>IP30 with cable plug **Type 2505** ▶ |
| Explosion protection | Further information can be found in chapter "3.4. Explosion protection" on page 4. |
| North America (USA/Canada) | Further information can be found in chapter "3.5. North America (USA/Canada)" on page 4. |
| **Environment and installation** | |
| Installation position | As required, preferably with actuator upright |
| Ambient temperature | - 10 °C...+ 55 °C |

1.) Pressure data: overpressure to atmospheric pressure
2.) Measurement at + 20 °C, 6 bar at the valve inlet and 1 bar differential pressure
3.) Measurement according to ISO 12238

## 2. Circuit functions

| Symbol | Description |
|---|---|
| 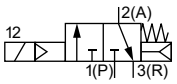 | **Circuit function C (CF C)**<br>3/2-way solenoid valve<br>Servo-controlled<br>Normally closed |
| 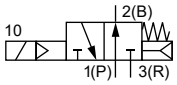 | **Circuit function D (CF D)**<br>3/2-way solenoid valve<br>Servo-controlled<br>Normally open |
| 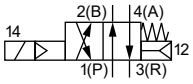 | **Circuit function G (CF G)**<br>4/2-way solenoid valve<br>Servo-controlled |

## 3. Approvals and conformities

### 3.1. General notes

- The approvals and conformities listed below must be stated when making enquiries. This is the only way to ensure that the product complies with all required specifications.
- Not all available variants can be supplied with the below mentioned approvals or conformities.

### 3.2. Conformity

In accordance with the Declaration of Conformity, the product is compliant with the EU Directives.

### 3.3. Standards

The applied standards which are used to demonstrate compliance with the EU Directives are listed in the EU-Type Examination Certificate and/or the EU Declaration of Conformity.

### 3.4. Explosion protection

| Approval | Description |
|---|---|
| | **Optional: Explosion protection**<br>EU type examination certificate: PTB 01 ATEX 2175 / IECEx PTB 06.0102<br><br>As a category 2 device suitable for zone 1 and zone 2 (optional).<br><br>**ATEX:**<br>PTB 01 ATEX 2175<br>II 2G Ex ia IIC T5, T6 Gb<br><br>**IECEx:**<br>IECEx PTB 06.0102<br>Ex ia IIC T5, T6 Gb |

### 3.5. North America (USA/Canada)

| Approval | Description |
|---|---|
| | **Optional (valid for pilot control valve): UL Recognized for the USA and Canada** [1.)]<br>The pilot control valves are UL Recognized for the USA and Canada according to:<br>• UL 429 (electrically operated valves)<br>• CAN/CSA-C22.2 No. 139 |

1.) This device is intended to be used with a NEC Class 2 power source or NEC Class 2 transformer in accordance with UL1310 or UL1585.

DTS 1000390869 EN Version: - Status: RL (released | freigegeben | valide) printed: 28.10.2026

# 4. Dimensions

## 4.1. Port connection 1

**Note:**
Dimensions in mm

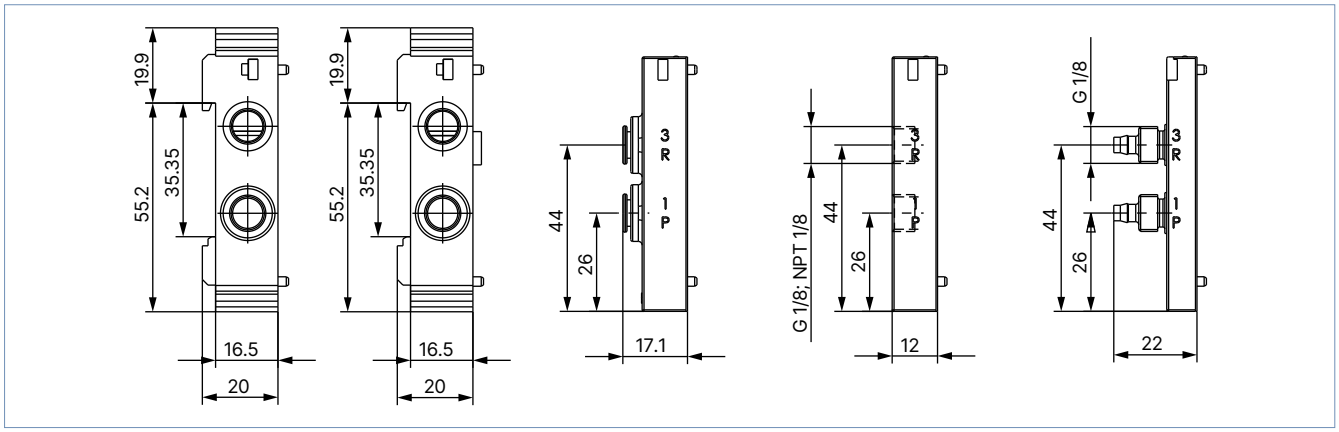


## 4.2. Port connection 2 (working ports)

**Note:**
Dimensions in mm

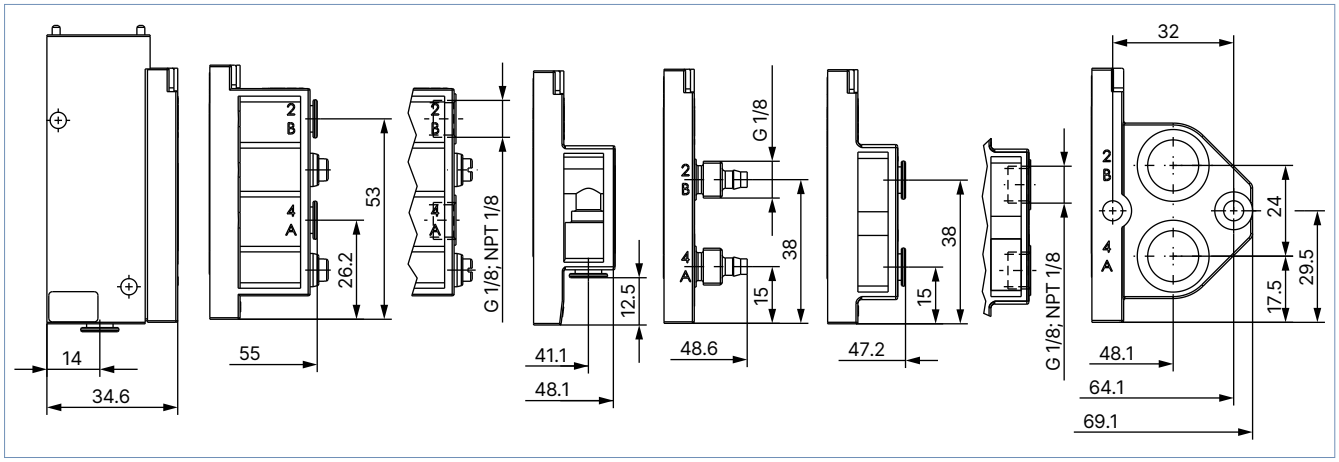


DTS 1000390869 EN Version: - Status: RL (released | freigegeben | valide) printed: 28.10.2026

## 4.3. Block installation with 18 mm extendable valves on a single base module

**Assembly with plug contacts lateral**

**Note:**

- Dimensions in mm
- Electrical connection: rectangular plug with 2 pins (cable plug **Type 2505** ▶, cable and strand variant)

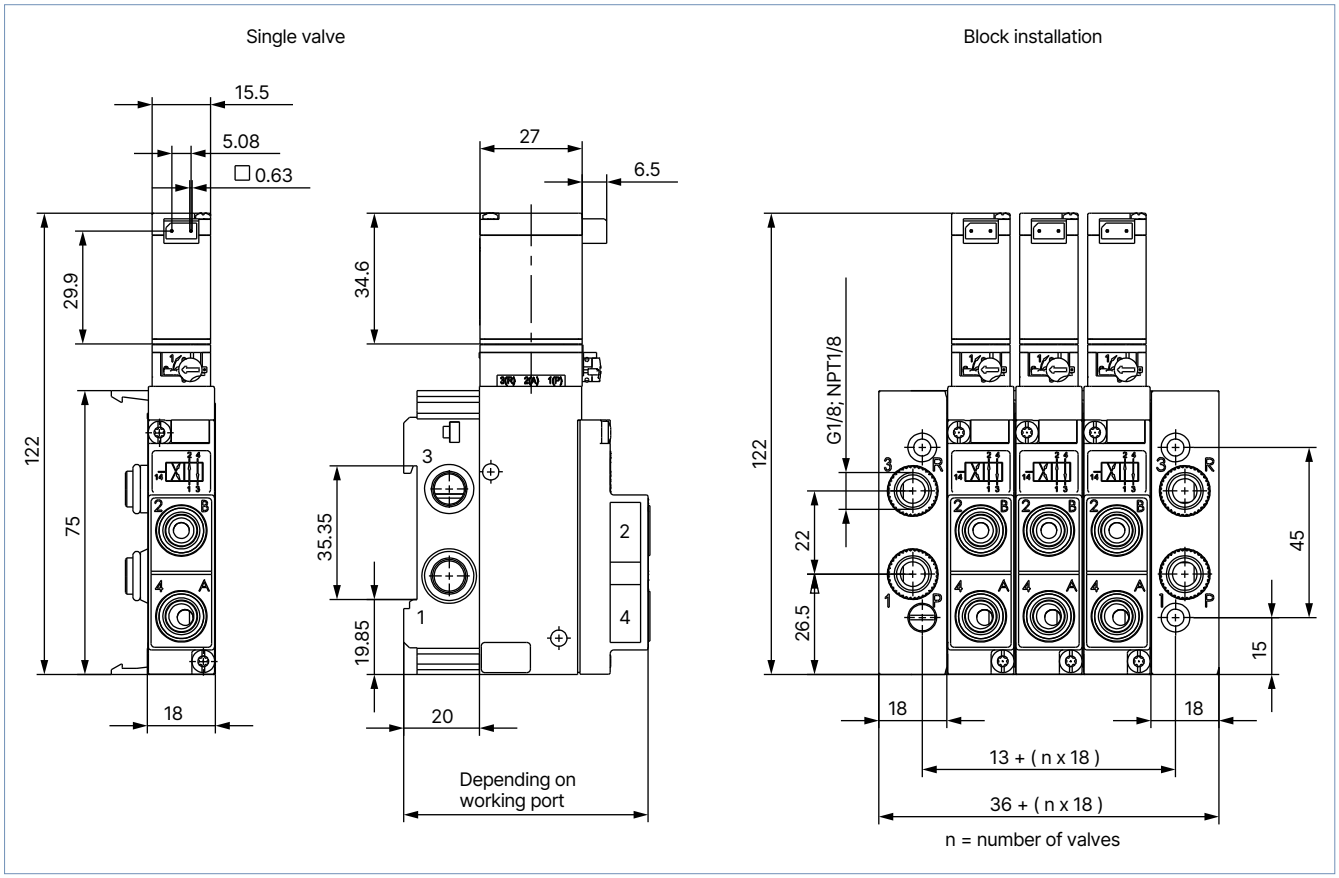


DTS 1000390869 EN Version: - Status: RL (released | freigegeben | valide) printed: 28.10.2026

DTS 1000390869 EN Version: - Status: RL (released | freigegeben | valide) printed: 28.10.2026

**Assembly with plug contacts at top**

**Note:**

- Dimensions in mm
- Electrical connection with plug contacts (cable plug **Type 2516** ▶, degree of protection IP65 DIN EN 175301-803)

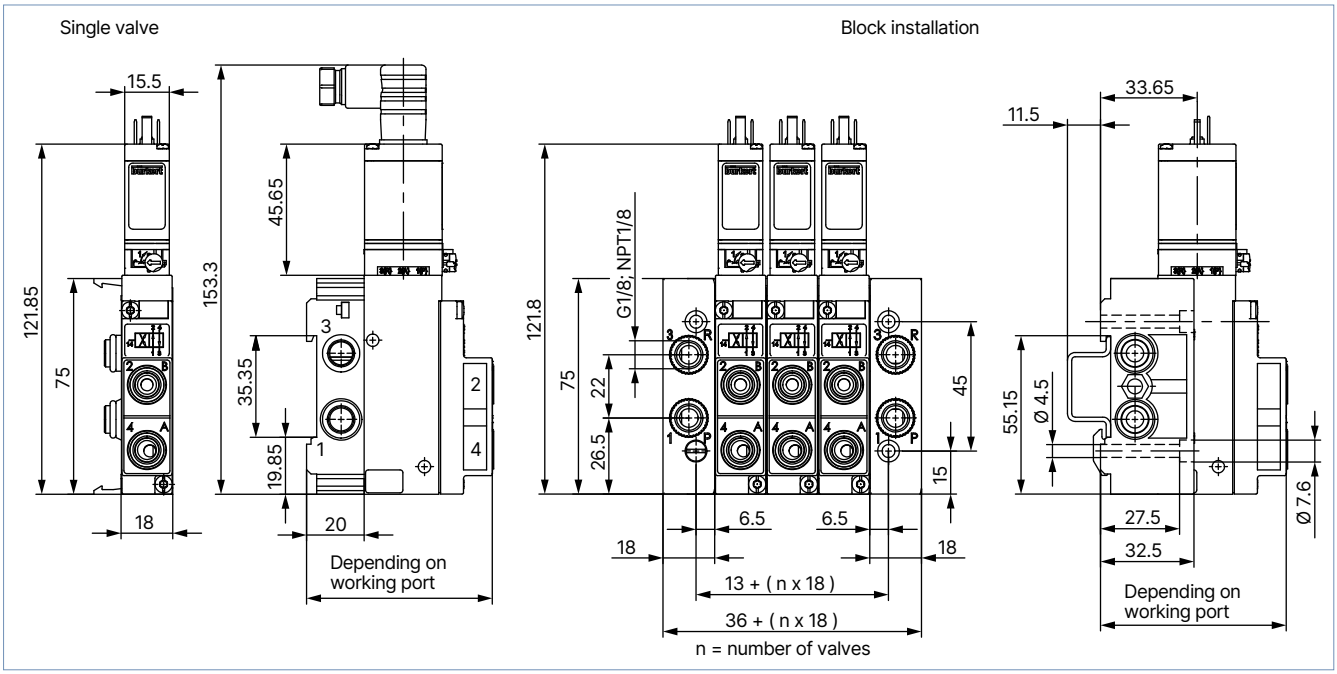


## 4.4. Block installation with 19 mm extendable valves on pneumatic modules Type MP05

**Assembly with plug contacts lateral**

**Note:**
Dimensions in mm

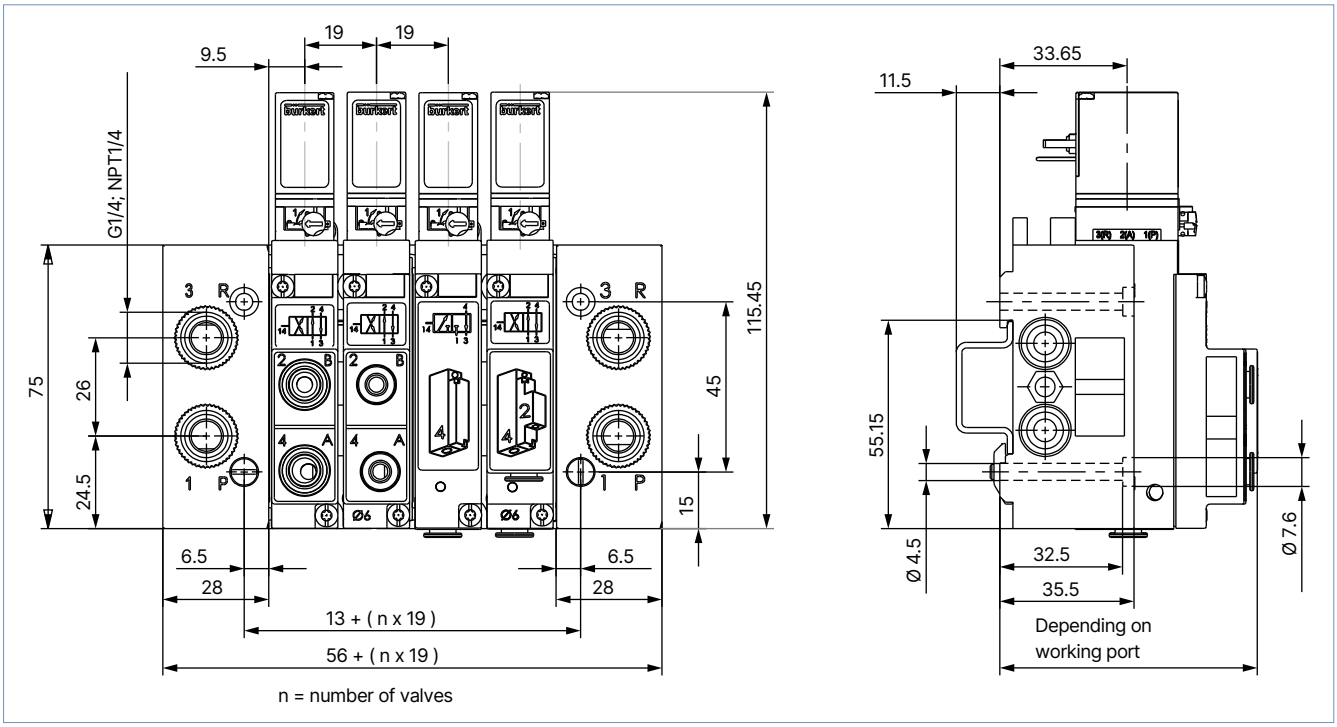

**Assembly with variants for supply connection with push-in coupling Ø 6 mm and threaded connection G ⅛**

**Note**
Banjo bolts as throttle check valve

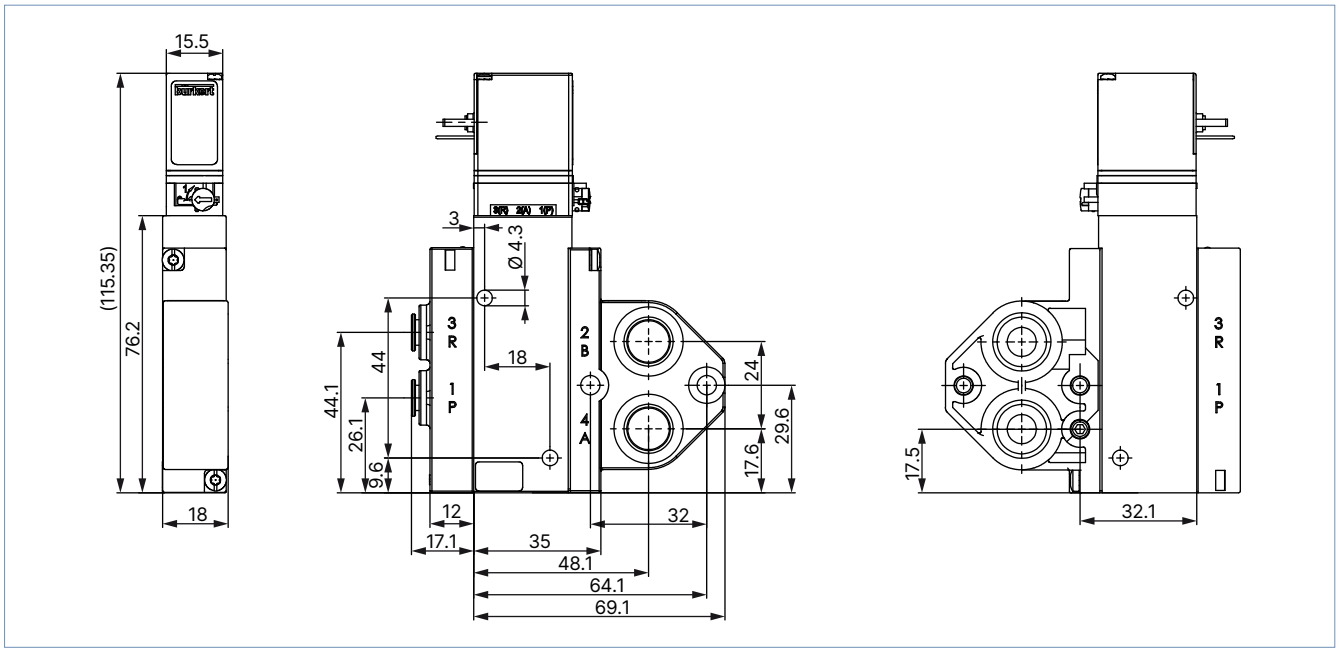


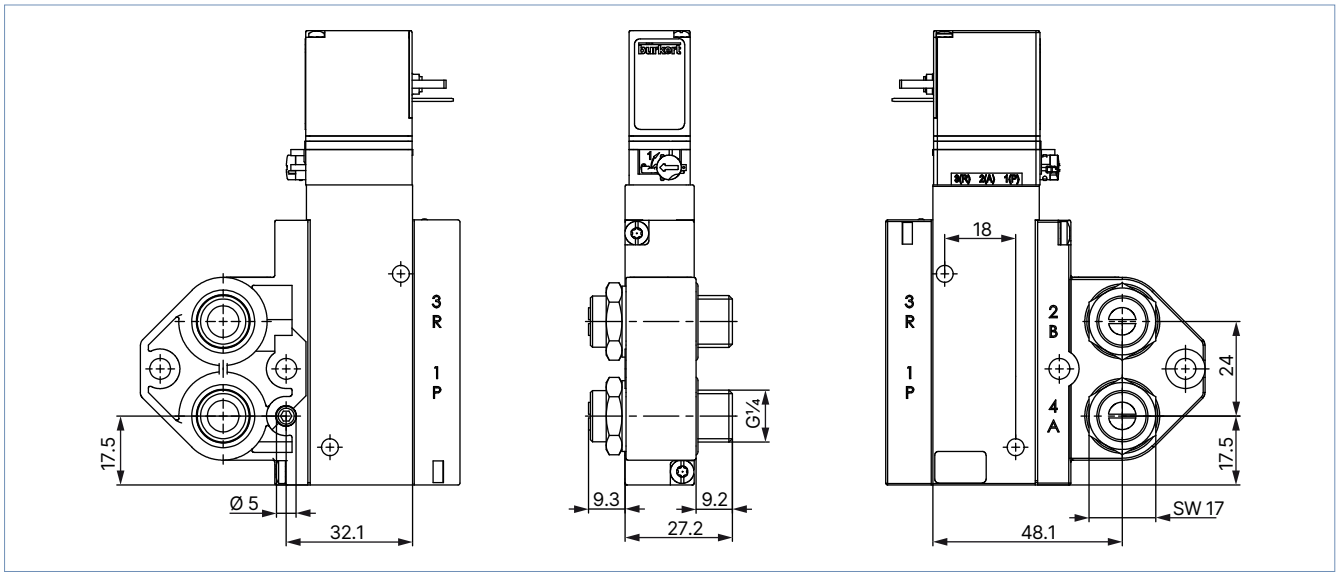


DTS 1000390869 EN Version: - Status: RL (released | freigegeben | valide) printed: 28.10.2026

# 5. Product design and assembly

## 5.1. Product assembly servo-assisted valve

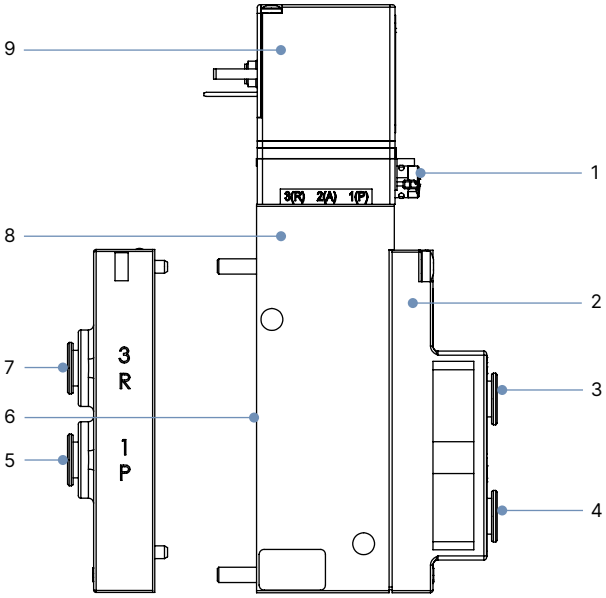


| No. | Element |
|---|---|
| **1** | Manual override |
| **2** | Port connection 2 |
| **3** | Working port 2 (B) |
| **4** | Working port 4 (A) |
| **5** | Pressure supply 1 (P) |
| **6** | Port connection 1<br>(FM07 = not equipped) |
| **7** | Exhaust 3 (R) |
| **8** | Amplifier |
| **9** | Pilot control standard<br>Plug contacts lateral |

**Connection variants for port connection 1**

**LTA1 = port connection 1**

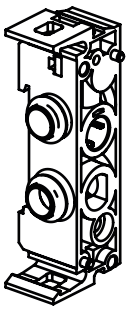

Base module

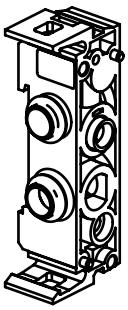

Base module
with check valve
in R channel

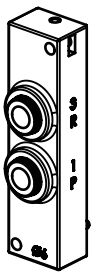

Plug-in coupling
Ø 6 mm

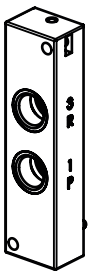

Sleeve G 1/8
or NPT 1/8

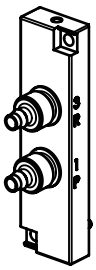

Hose screw connection
SL 6/4 mm

Circuit function C, D, G

DTS 1000390869 EN Version: - Status: RL (released | freigegeben | valide) printed: 28.10.2026

### Connection variants for port connection 2 (working ports)

**Note:**
The corresponding properties of the connection variants can be found in the table at the end of the chapter.

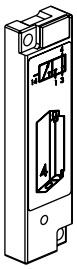

Variant A

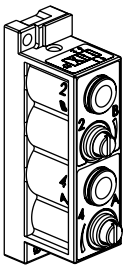

Variant B
Plug-in coupling
Ø 6 mm

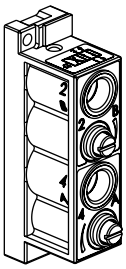

Variant B
G 1/8 or NPT 1/8

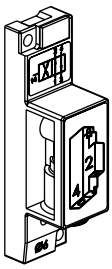

Variant C

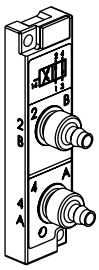

Variant D

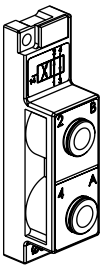

Variant E

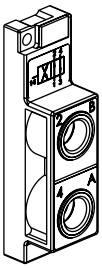

Variant F

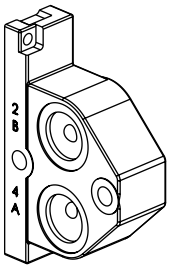

Variant G

**LTA2 = port connection 2**

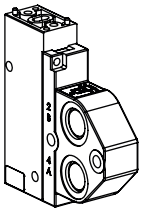

Namur

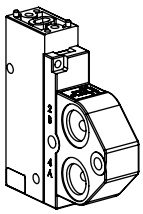

Namur for
throttle screws

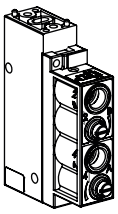

Variant B
G 1/8 or
NPT 1/8

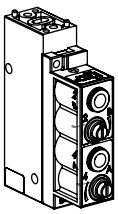

Variant B
Plug-in coupling
Ø6 mm

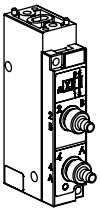

Variant D

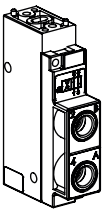

Variant E

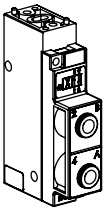

Variant F

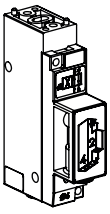

Variant C
(code AF07)

Circuit function G

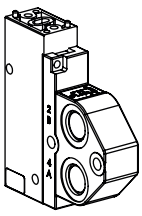

Namur

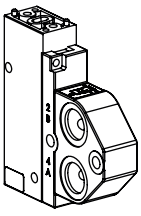

Namur for
throttle screws

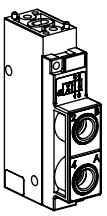

Variant E

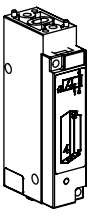

Variant A

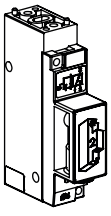

Variant C
(code AF07)

Circuit function C

Circuit function D

| Variant | Properties |
|---|---|
| Variant A | Plug-in coupling Ø 6 mm at bottom (circuit function C) |
| Variant B | Plug-in coupling Ø 6 mm lateral and sleeve G ⅛ or NPT ⅛ with throttle check valve |
| Variant C | Plug-in coupling Ø 6 mm at bottom (circuit function D+G) |
| Variant D | Hose screw connection SL 6/4 mm lateral |
| Variant E | Plug-in coupling Ø 6 mm lateral |
| Variant F | Sleeve G ⅛ or NTP ⅛ lateral |
| Variant G | Namur flange or Namur flange for throttle screws |

DTS 1000390869 EN Version: - Status: RL (released | freigegeben | valide) printed: 28.10.2026

### Electrical data explosion-proof variant Ex ia

**Note:**

- The valve is intended for operation at 24 V DC outputs via the intermedia switching of a corresponding intrinsically safe operating resource (isolating module or barrier).
- The permissible maximum values/pairs of values can be found in the "Operating Instructions Type AC21 | Magnetic Coil | PTB 01 ATEX 2175" on our website under "Operating Instructions", **Type 6106** ▶.
- Type of protection: PTB 01 ATEX 2175: II 2 G Ex ia IIC T5,T6 Gb
  IECEx PTB 06.0102: Ex ia IIC T5,T6 Gb

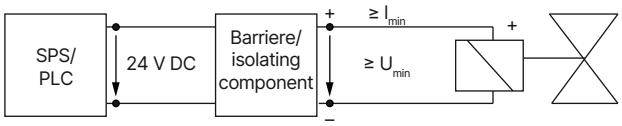


| Variant | Resistance at + 20 °C ± 4 % | Minimum terminal voltage | Minimum current |
|---|---|---|---|
| | [Ω] | [V] | [mA] |
| For use with a 300 Ω supply module | 320 | 9.3 | 29 |
| High resistance variant | 475 | 10.9 | 23 |

### Electrical connection with plug for extendable valves (cable plug Type 1057 for individual wiring)

Cable plug Type 1057 can be selected with plug configuration at top (see "Connection variants for port connection 2 (working ports)" on page 10). The main prerequisite is that the base module is selected for width/station 18 mm. Neutral and protective conductors are looped through and connected centrally once. When connecting the valves, only the control line to each valve must be installed. The neutral and protective conductors are integrated in the cable plug. The major advantage of this system is that a valve can be removed from the block without difficulty.

**Note:**
The cable plug Type 1057 (degree of protection IP20) is available only in conjunction with the individual base module with width per station 18 mm.

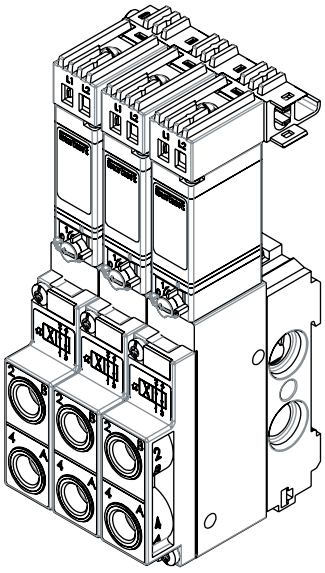

Block installation with extendable valves
Cable plug Type 1057

DTS 1000390869 EN Version: - Status: RL (released | freigegeben | valide) printed: 28.10.2026

## 5.2. Product assembly block mounting with 18 mm extendable valves on individual base module

**Assembly with plug contacts lateral**

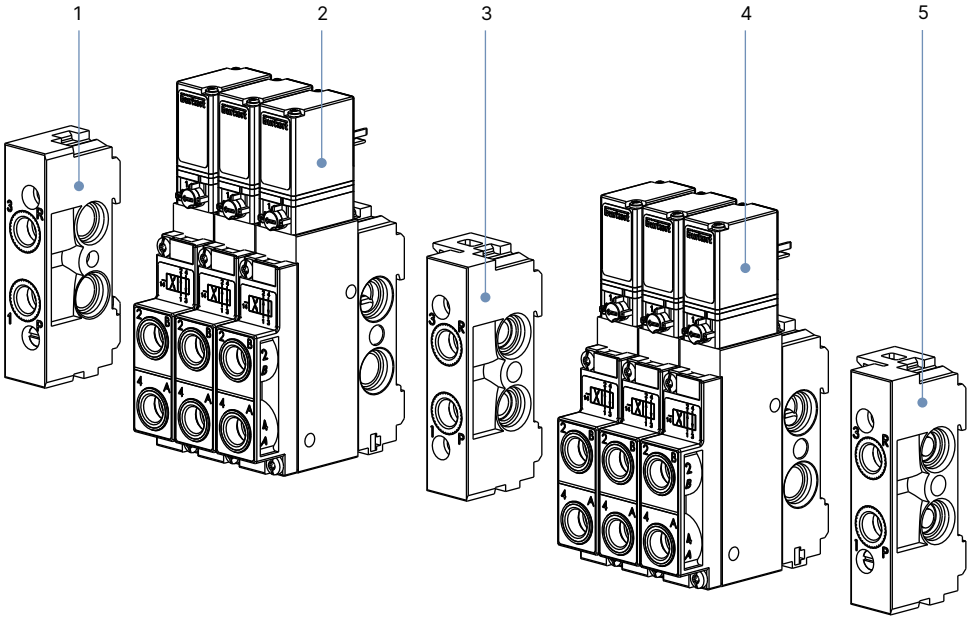


| No. | Element |
|---|---|
| 1 | Connection module left |
| 2 | Extendable valves |
| 3 | Intermediate feed (for different pressures) |
| 4 | Extendable valves |
| 5 | Connection module right |

**Assembly with plug contacts at top**

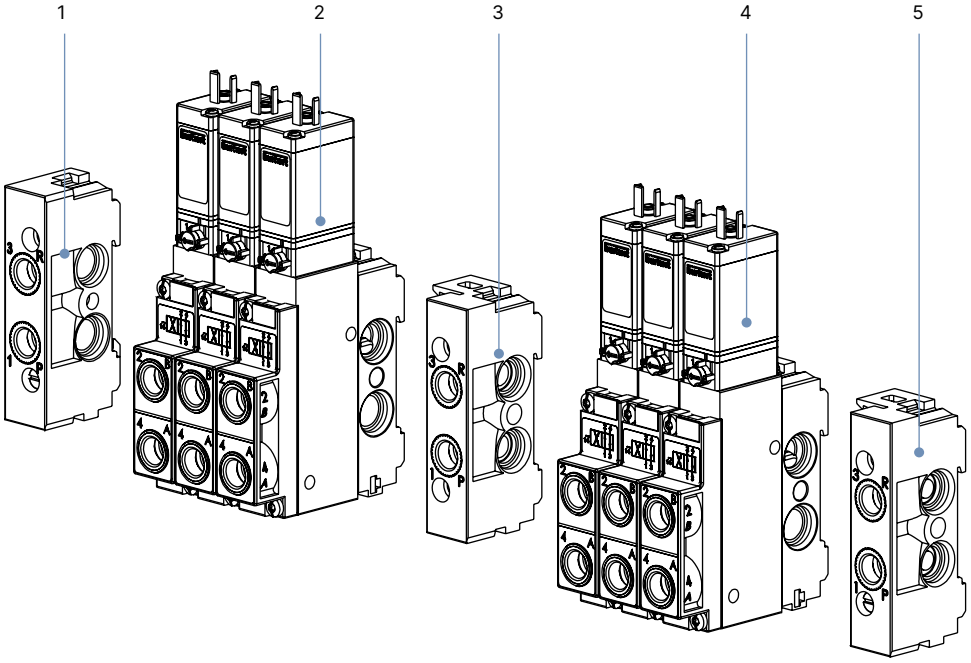


| No. | Element |
|---|---|
| 1 | Connection module left |
| 2 | Extendable valves |
| 3 | Intermediate feed (for different pressures) |
| 4 | Extendable valves |
| 5 | Connection module right |

DTS 1000390869 EN Version: - Status: RL (released | freigegeben | valide) printed: 28.10.2026

### 5.3. Product assembly block mounting with 19 mm extendable valves on pneumatic modules Type MP05

**Assembly with plug contacts lateral**

**Note:**

- Variant with plug contacts at top: Individual wiring also possible
- Electrical connection with plug contacts (cable plug **Type 2516** ▶, degree of protection IP65 DIN EN 175301 - 803 )

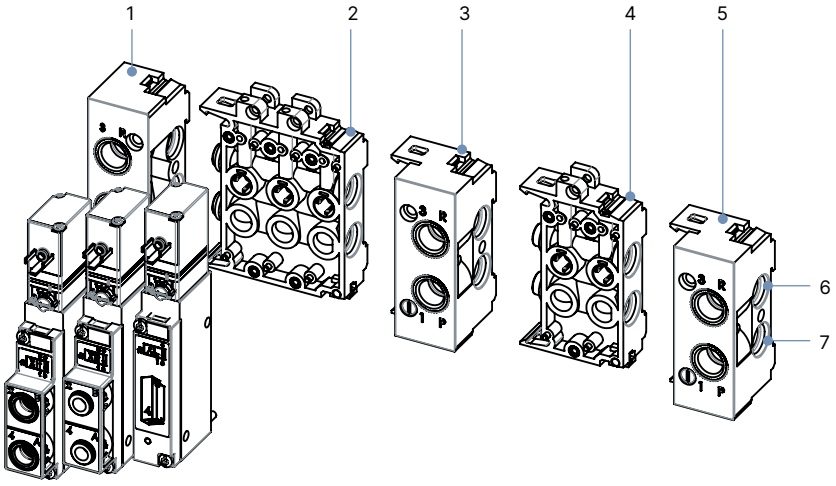


| No. | Element |
|---|---|
| 1 | Connection module left |
| 2 | Base module 3-fold Type MP05 |
| 3 | Connection module right as intermediate module (supply connections pierced or closed; different pressure supply P1, P2...is possible) |
| 4 | Base module 2-fold, Type MP05 |
| 5 | Connection module right |
| 6 | Exhaust channel: 3 (R) |
| 7 | Supply connection: 1 (P) |

## 6. Ordering information

### 6.1. Bürkert eShop



**Bürkert eShop – Easy ordering and quick delivery**

You want to find your desired Bürkert product or spare part quickly and order directly? Our online shop is available for you 24/7. Sign up and enjoy all the benefits.

Order online now

### 6.2. Bürkert product filter



**Bürkert product filter – Get quickly to the right product**

You want to select products comfortably based on your technical requirements?
Use the Bürkert product filter and find suitable articles for your application quickly and easily.

Try out our product filter

DTS 1000390869 EN Version: - Status: RL (released | freigegeben | valide) printed: 28.10.2026

## 6.3. Ordering chart

**Extendable single valves with module flange for supply connections 1 (P) and 3 (R) with plug contacts at top**

**Note:**

- Other variants are available on request.
- The cable plug is not included in the scope of delivery and must be ordered separately, see "6.4. Ordering table accessories" on page 17.
- See "2. Circuit functions" on page 4 for more information about the circuit functions displayed.
- See "Electrical data explosion-proof variant Ex ia" on page 11 for more information on the 18 mm stackable valves with individual base modules.

**The following applies to all the variants listed below:**

- Nominal width: 4.0 mm
- $Q_{Nn}$ value air: 300 l/m
- Pressure range: 2...10 bar

| Circuit function | Working ports 2 and 4 | Voltage/Frequency [V/Hz] | Effective coil power [W] | Article no. DC coil 1.) | Article no. UC coil 2.) |
|---|---|---|---|---|---|
| **CF C**<br>3/2-way solenoid valve<br>Servo-controlled<br>Normally closed 3.)<br>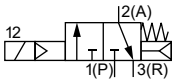 | Plug-in coupling Ø 6 mm at bottom with check valve (**variant A**) | 24 DC/UC | 2 | 136872 | – |
| | | 110...120 DC | 3 | 136873 | 145970 |
| | | 220...240 DC | 3 | 136874 | 145971 |
| **CF D**<br>3/2-way solenoid valve<br>Servo-controlled<br>Normally open 3.)<br>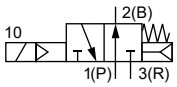 | Plug-in coupling Ø 6 mm at bottom with check valve (**variant C**) | 24 DC | 2 | 136875 | – |
| | | 110...120 DC | 3 | 136876 | – |
| | | 220...240 DC | 3 | – | – |
| **CF G**<br>4/2-way solenoid valve<br>Servo-controlled<br>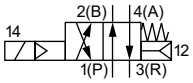 | Hose screw connection lateral 6/4 (**variant D**) | 24 DC/UC | 2 | 136878 | – |
| | | 110...120 DC/UC | 3 | – | – |
| | | 220...240 DC/UC | 3 | 136880 | – |
| | G ⅛ lateral (**variant E**) | 24 DC/UC | 2 | 136881 | – |
| | | 110...120 DC/UC | 3 | 136882 | – |
| | | 220...240 DC/UC | 3 | 136883 | 145980 |
| | G ⅛ lateral with Throttle check valve (**variant B**) | 24 DC/UC | 2 | 136884 | – |
| | | 110...120 DC/UC | 3 | – | 145982 |
| | | 220...240 DC/UC | 3 | 136886 | 145983 |
| | Plug-in coupling Ø 6 mm lateral (**variant F**) | 24 DC/UC | 2 | 136887 | – |
| | | 110...120 DC/UC | 3 | 136888 | – |
| | | 220...240 DC/UC | 3 | 136889 | 145986 |
| | Plug-in coupling Ø 6 mm at bottom (**variant C**) | 24 DC/UC | 2 | 136890 | – |
| | | 110...120 DC/UC | 3 | 136891 | 145988 |
| | | 220...240 DC/UC | 3 | 136892 | 145989 |

– = not available

1.) Only for direct current operation (DC), for alternating current (AC) connect cable plug upstream with rectifier

2.) For universal current operation (UC = DC or AC). Rectifier, varistor und LED are integrated into the coil.

3.) 3/2-way variants (circuit functions C and D) with check valve in the module flange (in R-channel)

DTS 1000390869 EN Version: - Status: RL (released | freigegeben | valide) printed: 28.10.2026

**Extendable single valves with module flange for supply connections 1 (P) and 3 (R) with rectangular electrical connection**

**Note:**

- Other variants are available on request.
- The cable plug is not included in the scope of delivery and must be ordered separately, see "6.4. Ordering table accessories" on page 17.
- See "2. Circuit functions" on page 4 for more information about the circuit functions displayed.
- See "Electrical data explosion-proof variant Ex ia" on page 11 for more information on the 18 mm stackable valves with individual base modules.

**The following applies to all the variants listed below:**

- Nominal width: 4.0 mm
- $Q_{Nn}$ value air: 300 l/m
- Pressure range: 2...10 bar

| Circuit function | Working ports 2 and 4 | Voltage/Frequency [V/Hz] | Effective coil power [W] | Article no. DC coil |
|---|---|---|---|---|
| **CF C**<br>3/2-way solenoid valve<br>Servo-controlled<br>Normally closed 1.)<br>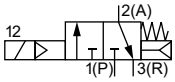 | Plug-in coupling Ø 6 mm at bottom with check valve (**variant A**) | 24 DC | 2 | 145993 2.) |
| **CF G**<br>4/2-way solenoid valve<br>Servo-controlled<br>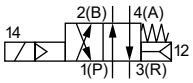 | G ⅛ lateral with throttle check valve (**variant B**) | 24 DC | 2 | 145997 2.) |
| | Plug-in coupling Ø 6 mm lateral (**variant F**) | 24 DC | 2 | 145998 2.) |
| | Plug-in coupling Ø 6 mm at bottom (**variant C**) | 24 DC | 2 | 145999 2.) |

1.) 3/2-way variants (circuit functions C and D) with check valve in the module flange (in R-channel)

2.) Only for direct current operation (DC), for alternating current (AC) connect cable plug upstream with rectifier

DTS 1000390869 EN Version: - Status: RL (released | freigegeben | valide) printed: 28.10.2026

**For valve island mounting, valves with plug contacts lateral; connection with integrated connector sockets on valve islands Type 8640**

| Circuit function | Working ports 2 and 4 | Voltage/ Frequency | Effective coil power | Pressure range | Article no. | Article no. |
|---|---|---|---|---|---|---|
| | | [V/Hz] | [W] | [bar] | Plug contacts via pressure input | Plug contacts via pressure output |
| **CF C**<br>3/2-way solenoid valve<br>Servo-controlled<br>Normally closed<br>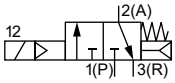 | Plug-in coupling Ø 6 mm, below **(variant A)** | 24 DC | 1 | 2...8 | 132479 | 135203 |
| | | 24 DC | 2 | 2...10 | 133148 | 135204 |
| | | 110...120 DC | 3 | 2...10 | – | 132952 |
| | | 220...240 DC | 3 | 2...10 | – | 132953 |
| **CF D**<br>3/2-way solenoid valve<br>Servo-controlled<br>Normally open<br>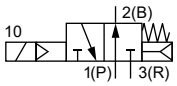 | Plug-in coupling Ø 6 mm **(variant C)** | 24 DC | 1 | 2...8 | 132481 | 136742 |
| | | 24 DC | 2 | 2...10 | 136741 | 136743 |
| | | 110...120 DC | 3 | 2...10 | – | 136744 |
| | | 220...240 DC | 3 | 2...10 | – | 136745 |
| **CF G**<br>4/2-way solenoid valve<br>Servo-controlled<br>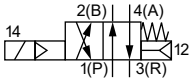 | Plug-in coupling Ø 6 mm, in front **(variant E)** | 24 DC | 1 | 2...8 | 132487 | 135205 |
| | | 24 DC | 2 | 2...10 | 133149 | 135206 |
| | | 110...120 DC | 3 | 2...10 | – | 132954 |
| | | 220...240 DC | 3 | 2...10 | – | 132955 |
| | Plug-in coupling Ø 6 mm, below **(variant C Code AF07)** | 24 DC | 2 | 2...10 | 133150 | 135208 |
| | | 110...120 DC | 3 | 2...10 | – | 132956 |
| | | 220...240 DC | 3 | 2...10 | – | 132957 |
| | Plug-in coupling Ø 6 mm, in front, with throttle check valve **(variant B)** | 24 DC | 2 | 2...10 | 133151 | 135210 |
| | | 110...120 DC | 3 | 2...10 | – | 133152 |
| | | 220...240 DC | 3 | 2...10 | – | 133153 |
| | Thread G ⅛, in front, **(variant F)** | 24 DC | 2 | 2...10 | 133157 | 135212 |
| | | 110...120 DC | 3 | 2...10 | – | 132958 |
| | | 220...240 DC | 3 | 2...10 | – | 132959 |
| | Thread G ⅛, in front, with throttle check valve **(variant B)** | 24 DC | 2 | 2...10 | 133159 | 135214 |
| | | 110...120 DC | 3 | 2...10 | – | 133160 |
| | | 220...240 DC | 3 | 2...10 | – | 133161 |
| | Hose screw connection, SL6/4 mm, in front **(variant D)** | 24 DC | 2 | 2...10 | 133163 | 135215 |
| | | 110...120 DC | 3 | 2...10 | – | 133164 |
| | | 220...240 DC | 3 | 2...10 | – | 133166 |

– = not available

DTS 1000390869 EN Version: - Status: RL (released | freigegeben | valide) printed: 28.10.2026

**Namur EExi 3/2 and 4/2-way solenoid valve for pneumatic**

**Note:**

- All valves possess plug contacts at the top and are supplied without a cable plug.
- Working ports 2 and 4: NAMUR flange

| Circuit function | Orifice [mm] | Supply connections 1 and 3 | $Q_{Nn}$ value air [l/min] | Pressure range [bar] | Feature | Article no. |
|---|---|---|---|---|---|---|
| **CF C**<br>3/2-way solenoid valve<br>Servo-controlled<br>Normally closed<br>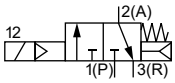 | 4.0 | Thread G ⅛, Variant 5 | 300 | 2...8 | None | 139224 |
| | | Plug-in coupling Ø 6 mm, Variant 6 | | | | 139402 |
| **CF G**<br>4/2-way solenoid valve<br>Servo-controlled<br>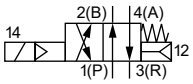 | 4.0 | Thread G ⅛, Variant 5 | 300 | 2...8 | With throttle check valve | 139407 |
| | | Plug-in coupling Ø 6 mm, Variant 6 | | | | 139408 |

## 6.4. Ordering table accessories

**Connection modules and accessories for valve blocks**

| Variant | Port connection valve block | Article no. |
|---|---|---|
| Connection module left | G ⅛ | 133175 |
| | G ¼ | 132512 |
| | NPT ¼ | 132513 |
| | Plug-in coupling Ø 8 mm | 623755 |
| | Plug-in coupling Ø 10 mm | 623762 |
| Connection module right | G ⅛ | 133177 |
| | G ¼ | 132514 |
| | Plug-in coupling Ø 8 mm | 623770 |
| | Plug-in coupling Ø 10 mm | 623784 |
| | NPT ¼ | 132515 |
| Intermediate feed | G ⅛ | 627742 |
| | G ¼ | 631288 |
| | Plug-in coupling Ø 8 mm | 631287 |
| | Plug-in coupling Ø 10 mm | 631290 |
| Lock screw | G ⅛ | 631019 |
| | G ¼ | 631020 |
| MP05 base module 2-fold | Without check valve | 132516 |
| | With check valve in R channel | 132518 |
| MP05 base module 3-fold | Without check valve | 132517 |
| | With check valve in R channel | 132519 |
| Sealing plug | Ø 6 mm | 015397 |
| | Ø 8 mm | 900065 |
| Protective cover | For unused valve slots | 643223 |

DTS 1000390869 EN Version: - Status: RL (released | freigegeben | valide) printed: 28.10.2026

### Cable plug Type 2516, form C according to DIN EN 175301 - 803

**Note:**

- Dimensions in mm
- The delivery of cable plug includes a flat seal and a fastening screw.
- For further variants see data sheet **Type 2516** ▶.

| Cable plug | Dimensions | Variant | Voltage | Article no. |
|---|---|---|---|---|
|  | 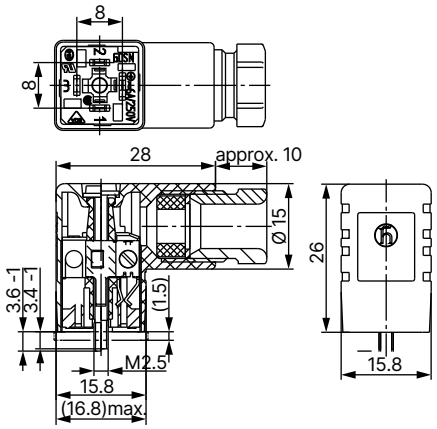 | Without wiring | 0...250 V AC/DC | 303141 |
| | | With LED | 12...24 V AC/DC | 303145 |
| | | With LED and varistor | 12...24 V AC/DC | 303148 |
| | | With rectifier, LED and varistor | 12...24 V AC/DC | 303142 |

### Further accessories

| Description | Article no. |
|---|---|
| Type 1057-SA 3-fold extendable cable plug, IP20, with looped-through neutral and protective conductors (only for 24 V DC) | 629253 |
| Standard rail 300 mm for block 8...12-fold with intermediate feed (ZE) or for block 8...14-fold without ZE | 640789 |
| Standard rail 408 mm for block 13...17-fold with intermediate feed (ZE) or for block 15...19-fold without ZE | 640788 |
| Standard rail 498 mm for block 17...22-fold with 2 intermediate feeds (ZE) or for block 18...23-fold without 1 ZE | 630579 |

DTS 1000390869 EN Version: - Status: RL (released | freigegeben | valide) printed: 28.10.2026