

Plunger valve 3/2 way direct-acting

- Direct-acting, compact small-format valve with diameter of up to DN 1.6
- Screwed coil system
- Banjo threaded connection for direct mounting on pneumatic valves
- Simple and quick push-in, flange, or manifold installation
- Service-friendly manual override

Product variants described in the data sheet may differ from the product presentation and description.

Can be combined with



Type 2507
Cable plug,
form B according to
industry standard



Type 2516
Cable plug,
form C according to
DIN EN 175301-803

Type description

Valve 6012 is a direct-acting plunger valve. The stopper and core guide tube are welded together to enhance pressure resistance and leak-tightness. Various seal material combinations are available depending on the application. A Bürkert-specific flange design (SFB) enables space-saving arrangement of valves on a manifold. Push-in fittings can be selected for flexible hose connection. A banjo connection with banjo bolt is the ideal solution for easy direct mounting on a pneumatic drive. Opti anual actuation enables quick commissioning and optimal maintenance. ion with a cable plug in accordance with industry standard Form B or 3 Form C, the valves satisfy protection class IP65.

Phase out

DTS 1000010714 EN Version: - Status: PO (Phase out | Phase out | Phase out) printed: 28.10.2026

© Christian Bürkert GmbH & Co. KG, Subject to alteration

Visit product website

bürkert
FLUID CONTROL SYSTEMS

Table of contents

1. General technical data 3

2. Circuit functions 4

3. Approvals and conformities 4

3.1. General notes ... 4
3.2. Conformity ... 4
3.3. Standards ... 4

4. Materials 5

4.1. Bürkert resistApp ... 5
4.2. Material specifications ... 5
Standard variant ... 5
Banjo variant ... 6

5. Dimensions 7

5.1. Standard variant ... 7
Threaded variant ... 7
Sub-base variant ... 7
Pin assignment ... 8
5.2. Banjo variant ... 9
5.3. Multiple manifold ... 10
Manifolds for valves with 20 mm coil (SG2) ... 10

6. Performance specifications 10

6.1. Power consumption ... 10
Standard variant ... 10
Banjo variant ... 10

7. Ordering information 11

7.1. Bürkert eShop ... 11
7.2. Bürkert product filter ... 11
7.3. Bürkert Product Eng ... 11
7.4. Ordering chart ... 12
Standard varia ... 12
Banjo varia ... 14
7.5. Orderin ... 15
Mul ... 15
A ... 15
uing to DIN EN 175301-803 ... 15
cording to industry standard ... 16

Phase out

DTS 1000010714 EN Version: - Status: PO (Phase out | Phase out | Phase out) printed: 28.10.2026

DTS 1000010714 EN Version: - Status: PO (Phase out | Phase out | Phase out) printed: 28.10.2026

1. General technical data

Product properties	
Dimensions	Further information can be found in chapter "5. Dimensions" on page 7.
Material	
Seal	FKM, NBR
Body	Brass, polyamide (PA), stainless steel 1.4305
Manual override	Optional, standard for Type 6012 banjo variant
Weight	
Standard variant	125 g (G ⅛)
Banjo variant	135 g
Orifice	DN 1.2 and DN 1.6
Circuit function	C and D Further information can be found in chapter "2. Circuit functions" on page 4.
Thermal insulation class of solenoid coil	Polyamide coil class B Epoxy coil class H
Performance data	
Duty cycle/single valve for block mounting on multiple manifold	100 % continuous operation Intermittent operation 60 % (30 min) or with 2 W coil 100 % (on request)
Switching time [1.)]	
Standard variant	DN 1.2 mm: Opening 7...10 ms, Closing 9...12 ms DN 1.6 mm: Opening 7...12 ms, Closing 7...12 ms
Banjo variant	DN 1.2 mm, 4 W AC: Opening 7...10 ms, Closing 9...12 ms DN 1.2 mm, 4 W DC: Opening 7...12 ms, Closing 7...12 ms
Electrical data	
Operating voltage	24 V DC, 24 V 50 Hz, 110/230 V 50 Hz
Power consumption	Further information can be found in chapter "6.1. Power consumption" on page 10.
Voltage tolerance	± 10 %
Medium data	
Operating medium	Neutral gases and liqui compressed air, water, hydraulic oil, technical vacuum)
Medium temperature	
Standard variant	- 10 °C...+ 100 °
Banjo variant	- 10 °C...+ 6
Viscosity	Max. 21
Product connections	
Electrical connection	• 5301 - 80 form C for cable plug **Type 2516** ▶. chapter "Cable plug Type 2516, form C according to DIN EN ndustry standard form B for cable plug **Type 2507** ▶. e found in chapter "Cable plug Type 2507, form B according to industry uest
Port connecti	
Standard v	base
Banjo v	nd tube fitting Ø 6 mm
Appr	
	with cable plug
	As required, preferably with actuator upright
A	
Stan	Max. + 55 °C
Banjo va	- 10 °C...+ 40 °C

1.) Measurement °C, 6 bar at the valve outlet according to DIN ISO 12238:2001, opening: pressure build-up 0...90 %, closing: pressure reduction 100...10 %

Phase out

2. Circuit functions

Symbol	Description
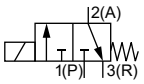	**Circuit function C (CF C)** 3/2-way solenoid valve Direct-acting Normally closed
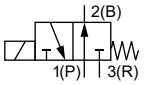	**Circuit function D (CF D)** 3/2-way solenoid valve Direct-acting Normally open

3. Approvals and conformities

3.1. General notes

- The approvals and conformities listed below must be stated when making enquiries. This is the only way to ensure that the product complies with all required specifications.
- Not all available variants can be supplied with the below mentioned approvals or conformities.

3.2. Conformity

In accordance with the Declaration of Conformity, the product is compliant with the EU Directives.

3.3. Standards

The applied standards which are used to demonstrate compliance with the EU Directives are listed in the EU-Type Examination Certificate and/or the EU Declaration of Conformity.

Phase out

DTS 1000010714 EN Version: - Status: PO (Phase out | Phase out | Phase out) printed: 28.10.2026

4. Materials

4.1. Bürkert resistApp

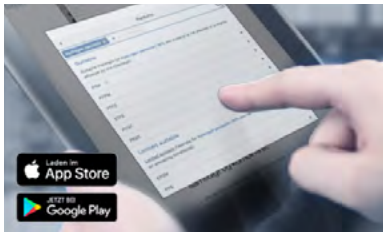

Bürkert resistApp – Chemical resistance chart

You want to ensure the reliability and durability of the materials in your individual application case? Verify your combination of media and materials on our website or in our resistApp.

Start chemical resistance check

4.2. Material specifications

Standard variant

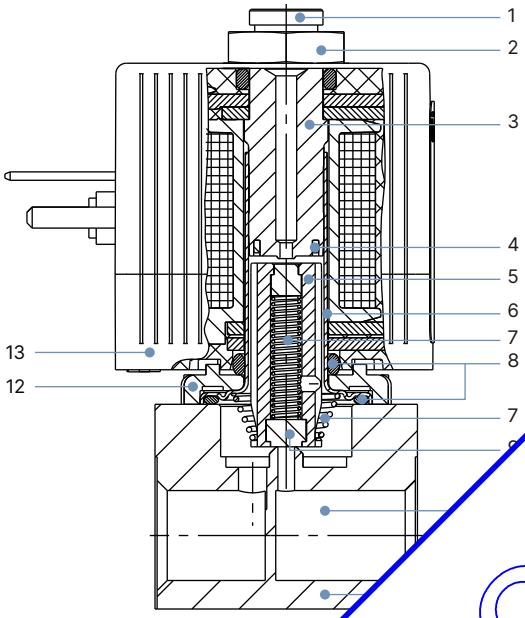

No.	Element	Material
1	Pressure inlet P	With circuit function D
2	Nut	DIN 176 - 9SMnPb28K (surface Zn5glcA)
3	Stopper	Stainless steel 1.4105
4	Shading ring	Copper (silver optional)
5	Core	Stainless steel 1.4105
6	Guide tube	Stainless steel 1.4303
7	Spring	Stainless steel 1.4310
8	O-ring	FKM/EPDM
9	Armature seal	FKM/EPDM
10	Pressure inlet P	With circuit function C
1	Body	Brass, stainless steel 1.4305 Polyamide (PA)
	-base	Zn3 gl cC surface (brass variant) Nickel-plated surface (stainless steel variant)
		DIN EN 175301 - 803 form C: Polyamide Industry standard connector form B: Epoxy

Phase out

DTS 1000010714 EN Version: - Status: PO (Phase out | Phase out | Phase out) printed: 28.10.2026

DTS 1000010714 EN Version: - Status: PO (Phase out | Phase out | Phase out) printed: 28.10.2026

Banjo variant

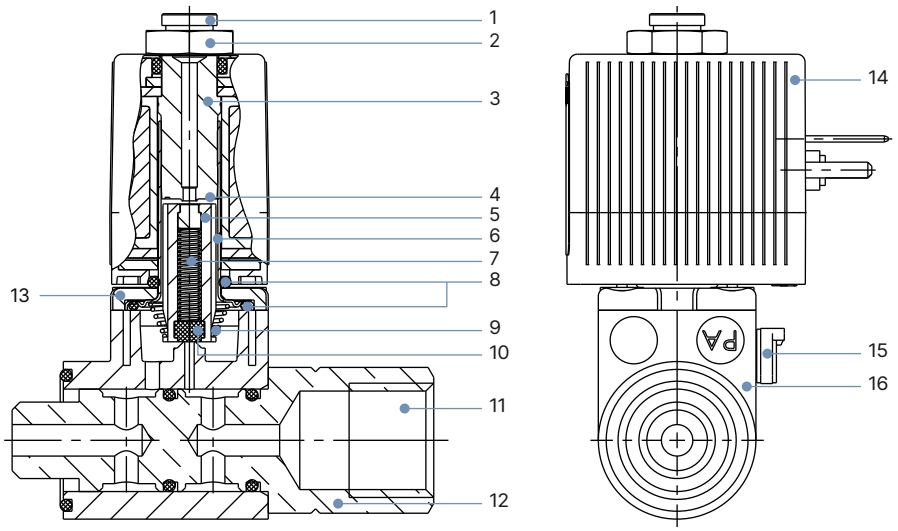

No.	Element	Material
1	Pressure inlet P	With circuit function D
2	Nut	DIN 176 - 9SMnPb28K (surface Zn5glcA)
3	Stopper	Stainless steel 1.4105
4	Shading ring	Copper (silver optional)
5	Core	Stainless steel 1.4105
6	Guide tube	Stainless steel 1.4303
7	Spring	Stainless steel 1.4310
8	O-ring	FKM
9	Spring	Stainless steel 1.4310
10	Armature seal	FKM
11	Pressure inlet P	With circuit function
12	Banjo bold	Nickel-plated br
13	Sub-base	Zn3 gl cC sur Nickel-plat
14	Coil	DIN EN Indu
15	Hand lever	D
16	Body	

Phase Out

5. Dimensions

5.1. Standard variant

Threaded variant

Note:

- Dimensions in mm
- Variant with coil according to DIN EN 175301-803 form C for cable plug Type 2516

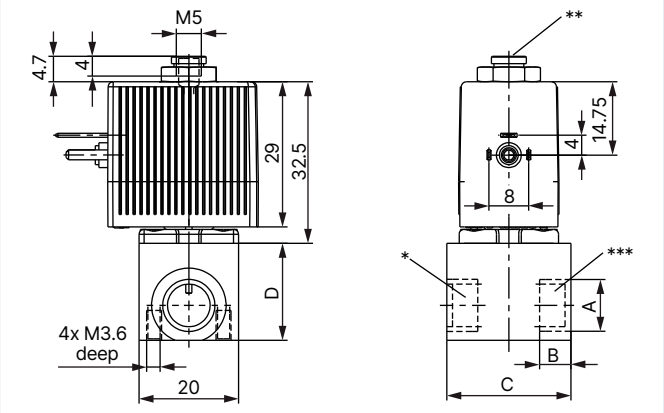

Port connection	A	B	C	D
		[mm]	[mm]	[mm]
Thread	M5	5	20	14
	G 1/8	8	25	19.5

Sub-base variant

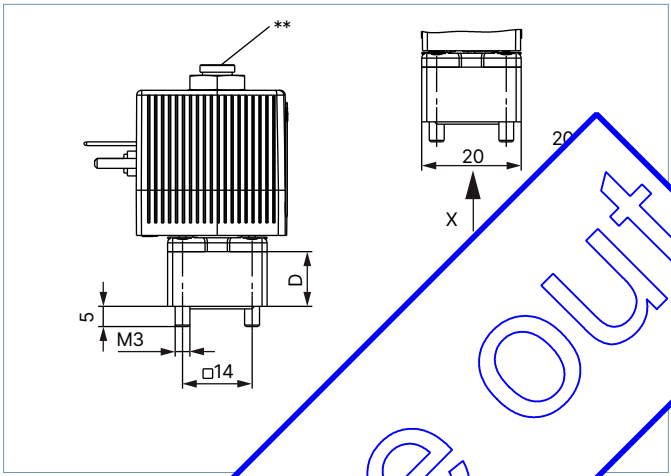

Port connection	A	B	C	D
		[mm]	[mm]	[mm]
Sub-base	–	–	20	11

Phase out

DTS 1000010714 EN Version: - Status: PO (Phase out | Phase out | Phase out) printed: 28.10.2026

Note:

- Dimensions in mm
- Variant with coil according to industry standard form B for cable plug Type 2507

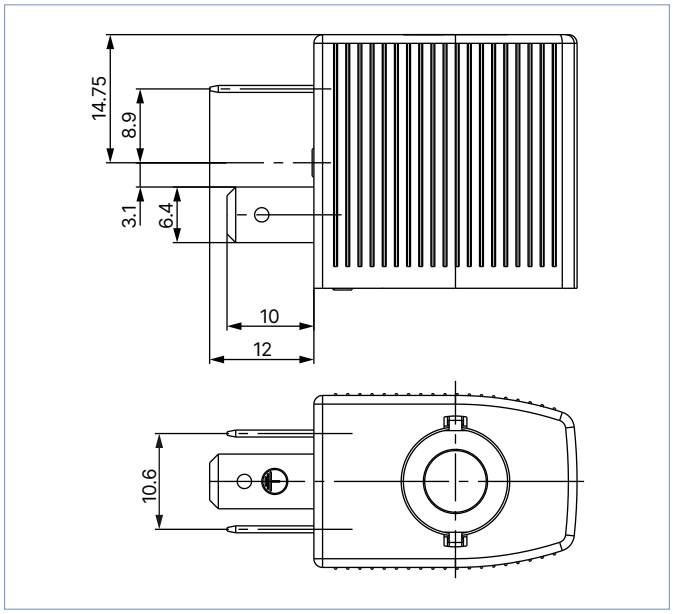

Port connection	A	B	C	D
		[mm]	[mm]	[mm]
Thread	M5	5	20	14
	G ⅛	8	25	19.5
Sub-base	–	–	20	11

Pin assignment

For the positions marked with *, ** or *** in the drawing, the connections are marked with the letters shown in the table above, depending on the circuit function. Unused connections in circuit functions A or B will be closed off with a blanking plug or cap nut.

Circuit function	Connection type		
	*	**	***
A	P	to lock	
B	to lock	B	
C	P	R	
D	R	P	
T	P	R	

Phase out

DTS 1000010714 EN Version: - Status: PO (Phase out | Phase out | Phase out) printed: 28.10.2026

5.2. Banjo variant

Note:

- Dimensions in mm
- Variant with coil according to DIN EN 175301 - 803 form C for cable plug Type 2516
- Push-in connection for compressed air: pressure inlet P can be rotated through 360°.

Threaded port for compressed air	Push-in connection for compressed air
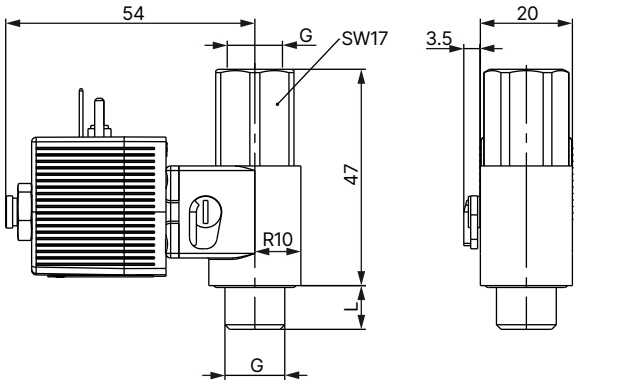	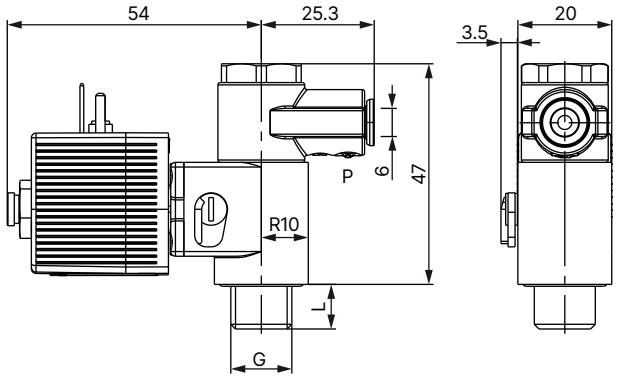

G	L [mm]
G ⅛	6.5
G ¼	9.5

Note:

- Dimensions in mm
- Variant with coil according to industry standard form B[illegible] plug Type 2507

Threaded port for compressed air	sh-in connection for compressed air
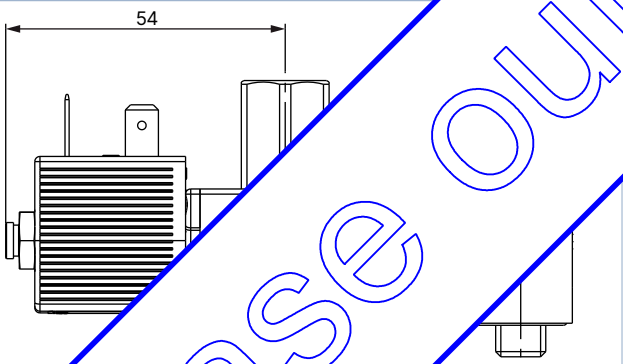	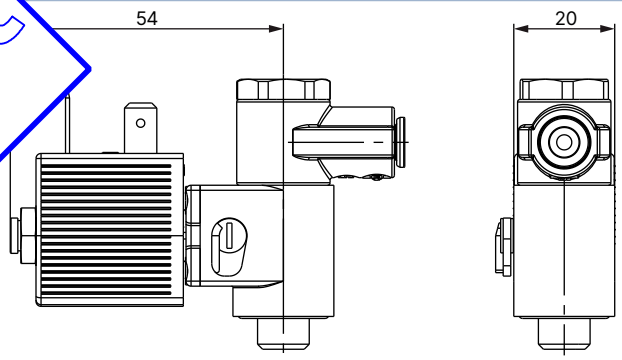

G

Phase out

DTS 1000010714 EN Version: - Status: PO (Phase out | Phase out | Phase out) printed: 28.10.2026

DTS 1000010714 EN Version: - Status: PO (Phase out | Phase out | Phase out) printed: 28.10.2026

5.3. Multiple manifold

Manifolds for valves with 20 mm coil (SG2)

Note:

- Dimensions in mm
- Made of aluminium, anodized
- Can only be combined with variants circuit function C (normally closed)

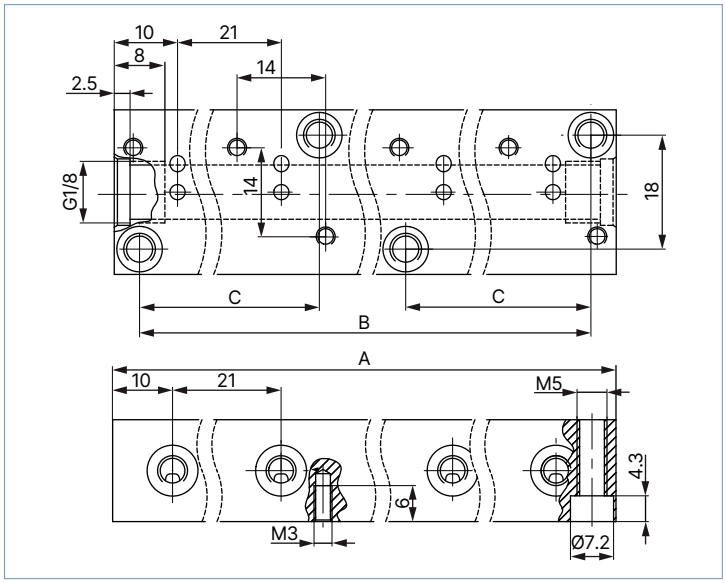

Quantity of valve slots	A [mm]	B [mm]	C [mm]	Article no.
2	41	33	–	005355
3	62	54	–	005313
4	83	75	–	005314
5	104	96	–	005315
6	125	117	–	005316
7	146	138	–	005893
8	167	159	54	005166
9	188	180	54	005241
10	209	201	75	005819
11	230	222	75	005242
12	251	243	96	005222

6. Performance specifications

6.1. Power consumption

Standard variant

Orifice	K_V value water [1.)]	Pressure r… Circuit func…		Power consumption		Switching times [3.)]	
				Inrush	Hold	Opening	Closing
[mm]	[m³/h]	[…				[ms]	[ms]
1.2	0.045		…or 4 W DC	9 VA	6 VA (4 W)	7...10	9...12
1.6	0.06			4 W	4 W	7...12	7...12

1.) Measurement at + 20 °C, 1 b…
2.) Pressure data: overpress…
3.) Measurement at + 20… …pening: pressure build up 0...90 %, closing: pressure relief 100...10 %

Banjo vari…

Orifi…	…ange [2.)]	Coil power	Power consumption		Switching times [3.)]	
			Inrush	Hold	Opening	Closing
	…]				[ms]	[ms]
	…...10	4 W AC or 4 W DC	9 VA	6 VA (4 W)	7...10	9...12
	0...6		4 W	4 W	7...12	7...12

1.) Me… …at valve inlet and 1 bar differential pressure
2.) Pressu… …to atmospheric pressure
3.) Measuren… …6 bar [2.)] at valve outlet according to ISO 12238. Opening: pressure build up 0...90 %, closing: pressure relief 100...10 %

Phase out

7. Ordering information

7.1. Bürkert eShop



Bürkert eShop – Easy ordering and quick delivery

You want to find your desired Bürkert product or spare part quickly and order directly? Our online shop is available for you 24/7. Sign up and enjoy all the benefits.

Order online now

7.2. Bürkert product filter



Bürkert product filter – Get quickly to the right product

You want to select products comfortably based on your technical requirements?
Use the Bürkert product filter and find suitable articles for your application quickly and easily.

Try out our product filter

7.3. Bürkert Product Enquiry Form

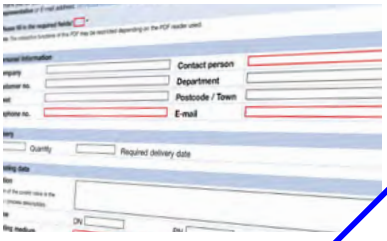

Bürkert Produ uiry Form – Your enquiry quickly and compactly

Would y pecific product enquiry based on your technical requirements? Use our P this purpose. There you will find all the relevant information for yo nable us to provide you with the best possible advice.

Phase out

DTS 1000010714 EN Version: - Status: PO (Phase out | Phase out | Phase out) printed: 28.10.2026

7.4. Ordering chart

Standard variant

Note:

- All valves complete with coil and FKM seal material and are supplied without a cable plug.
- Other variants are available on request.

Circuit function	Port connection	Orifice	K_V value water	Voltage/ frequency	Pressure range [1.)]	Article no. Brass body	Article no. Stainless steel body	Article no. Brass body	Article no. Polyamide body
		[mm]	[m³/h]	[V/Hz]	[bar]	without manual override		with manual override	
Solenoid valve complete in threaded or sub-base variant with polyamide coil according to DIN EN 175301 - 803 form C for cable plug Type 2516									
CF C 3/2-way solenoid valve Direct-acting Normally closed 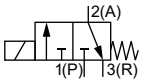	M5	1.2	0.045	024/DC	0...10	134143	–	–	–
				024/50		134144	–	–	–
				110/50		134145	–	–	–
				230/50		134146	–	–	–
	M5	1.6	0.06	024/DC	0...6	134147	–	–	–
				024/50		134148	–	–	–
				110/50		134149	–	–	–
				230/50		134150	–	–	–
	G ⅛	1.2	0.045	024/DC	0...10	134151	134167	134159	–
				024/50		134152	134168	134160	–
				110/50		134153	134169	134161	–
				230/50		134154	134170	134162	–
	G ⅛	1.6	0.06	024/DC	0...6	134155	134171	134163	–
				024/50		134156	134172	134164	–
				110/50		134157	134173	134165	–
				230/50		134158	134174	134166	–
	Sub-base	1.2	0.045	024/DC	0...10	134175	134183	–	134191
				024/50		134176	134184	–	134192
				110/50		134177	134185	–	134193
				230/50		134178	134186	–	134194
	Sub-base	1.6	0.06	024/DC	0...6	134179	134187	–	134195
				024/50		134180	134188	–	134196
				110/50		134181	134189	–	134197
				230/50		134182	134190	–	134198
CF D 3/2-way solenoid valve Direct-acting Normally open 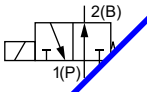	M5					134199	–	–	–
						134200	–	–	–
						134201	–	–	–
						134202	–	–	–
				DC	0...6	134204	–	–	–
				24/50		134205	–	–	–
				110/50		134206	–	–	–
				230/50		134207	–	–	–
			045	024/DC	0...10	134208	134216	–	–
				024/50		134209	134217	–	–
				110/50		134210	134218	–	–
				230/50		134211	134219	–	–
		1.6	0.06	024/DC	0...6	134212	134220	–	–
				024/50		134213	134221	–	–
				110/50		134214	134222	–	–
				230/50		134215	134223	–	–

1.) Pressure data: o pressure to atmospheric pressure

Phase out

DTS 1000010714 EN Version: - Status: PO (Phase out | Phase out | Phase out) printed: 28.10.2026

Circuit function	Port connection	Orifice	K_V value water	Voltage/ frequency	Pressure range [1.)]	Article no. Brass body	Article no. Stainless steel body	Article no. Brass body	Article no. Polyamide body
		[mm]	[m³/h]	[V/Hz]	[bar]	without manual override		with manual override	
Solenoid valve complete in threaded or sub-base variant with epoxy coil according to industry standard form B for cable plug Type 2507									
CF C 3/2-way solenoid valve Direct-acting Normally closed 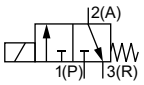	M5	1.2	0.045	024/DC	0...10	163569	–	–	–
				024/50		163570	–	–	–
				110/50		163571	–	–	–
				230/50		163572	–	–	–
	M5	1.6	0.06	024/DC	0...6	163573	–	–	–
				024/50		163574	–	–	–
				110/50		163575	–	–	–
				230/50		163576	–	–	–
	G ⅛	1.2	0.045	024/DC	0...10	161904	163592	163584	–
				024/50		163577	163593	163585	–
				110/50		163578	163594	163586	–
				230/50		163579	163595	163587	–
	G ⅛	1.6	0.06	024/DC	0...6	163580	163596	163588	–
				024/50		163581	163597	163589	–
				110/50		163582	163598	163590	–
				230/50		163583	163599	163591	–
	Sub-base	1.2	0.045	024/DC	0...10	163600	163608	–	161063
				024/50		163601	163609	–	163616
				110/50		163602	163610	–	163617
				230/50		163603	163611	–	163618
	Sub-base	1.6	0.06	024/DC	0...6	163604	163612	–	163619
				024/50		163605	163613	–	163620
				110/50		163606	163614	–	163621
				230/		217634	163615	–	163622
CF D 3/2-way solenoid valve Direct-acting Normally open 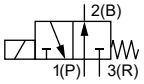	M5	1.2	0.045			163623	–	–	–
						163624	–	–	–
						163625	–	–	–
						63626	–	–	–
	M5	1.6				163627	–	–	–
						163628	–	–	–
						163629	–	–	–
						163630	–	–	–
	G ⅛				0...10	163631	163639	–	–
						163632	163640	–	–
						163633	163641	–	–
				0/50		163634	163642	–	–
				024/DC	0...6	163635	163643	–	–
				024/50		163636	163644	–	–
				110/50		163637	163645	–	–
				230/50		163638	163646	–	–

pressure

Phase out

DTS 1000010714 EN Version: - Status: PO (Phase out | Phase out | Phase out) printed: 28.10.2026

DTS 1000010714 EN Version: - Status: PO (Phase out | Phase out | Phase out) printed: 28.10.2026

Banjo variant

Note:

- All valves complete with polyamide body, NBR seal material and manual override and are supplied without a cable plug.
- Other variants are available on request.

Circuit function	Orifice	Pressure inlet P (valve body)	Service port A (banjo bolt)	Q_{Nn} value air	Voltage/ frequency	Pressure range [1.)]	Article no.
	[mm]			[l/min]	[V/Hz]	[bar]	
Banjo variant complete for direct mounting on pneumatic actuator with polyamide coil according to DIN EN 175301-803 form C for cable plug Type 2516							
CF C 3/2-way solenoid valve Direct-acting Normally closed 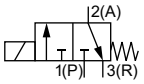 	1.2	G ⅛	G ⅛	48	024/DC	0...10	429112
					024/50		429113
					110/50		429115
					230/50		429117
		G ¼	G ⅛	48	024/DC	0...10	429126
					024/50		429127
					110/50		429128
					230/50		429129
		G ¼	G ¼	48	024/DC	0...10	427919
					024/50		427920
					110/50		427921
					230/50		427922
		Tube fitting Ø 6 mm	G ⅛	48	024/DC	0...10	425299
					024/50		425300
					110/50		428570
					230/50		425304
		Tube fitting Ø 6 mm	G ¼	48	024/DC	0...10	425285
					024/50		425286
					110/50		428569
					230/50		425290
Banjo variant complete for direct mounting on pneu... ...ith epoxy coil according to industry standard form B for cable plug Type 2507							
CF C 3/2-way solenoid valve Direct-acting Normally closed 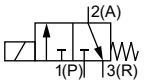 	1.2	G ⅛		48	024/DC	0...10	552299
					024/50		552300
					110/50		552301
					230/50		552302
				48	024/DC	0...10	552295
					024/50		552296
					110/50		552297
					230/50		552298
			¼	48	024/DC	0...10	552291
					024/50		552292
					110/50		552293
					230/50		552294
		...ng ...m	G ⅛	48	024/DC	0...10	552287
					024/50		552288
					110/50		552289
					230/50		552290
		Tube fitting Ø 6 mm	G ¼	48	024/DC	0...10	552283
					024/50		552284
					110/50		552285
					230/50		552286

1.) Pressure data ... ...essure to atmospheric pressure

Phase out

7.5. Ordering chart accessories

Multiple manifold

Note:
Further ordering information can be found in chapter "5.3. Multiple manifold" on page 10.

Accessories for manifolds

Accessory	Features	Article no.
Lock screw	With seal ring, G ⅛	005041
Cover plate	For unoccupied valve position	005100

Cable plug Type 2516, form C according to DIN EN 175301 - 803

Note:

- Dimensions in mm
- Delivery of cable plug includes a flat seal and a fastening screw.
- For further variants see data sheet **Type 2516** ▶.

Cable plug	Dimensions	Variant	Voltage	Article no.
	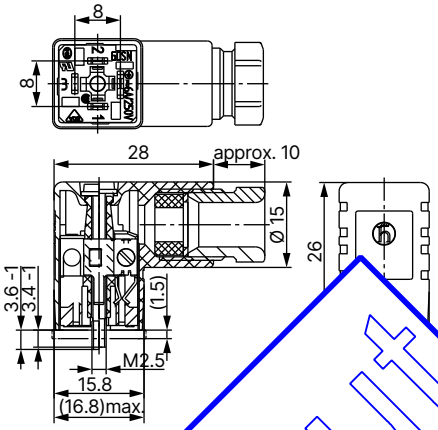	Without wiring	0...250 V AC/DC	303141
		With LED	12...24 V AC/DC	303145
		With LED and varistor	12...24 V AC/DC	303148
		With rectifier, LED and varistor	12...24 V AC/DC	303142

Phase Out

DTS 1000010714 EN Version: - Status: PO (Phase out | Phase out | Phase out) printed: 28.10.2026

Cable plug Type 2507, form B according to industry standard

Note:

- Dimensions in mm
- Delivery of cable plug includes a flat seal and a fastening screw.
- Refer to data sheet **Type 2507** ▸ for more information about the cable plug.

Cable plug	Dimensions	Variant	Voltage	Article no.
	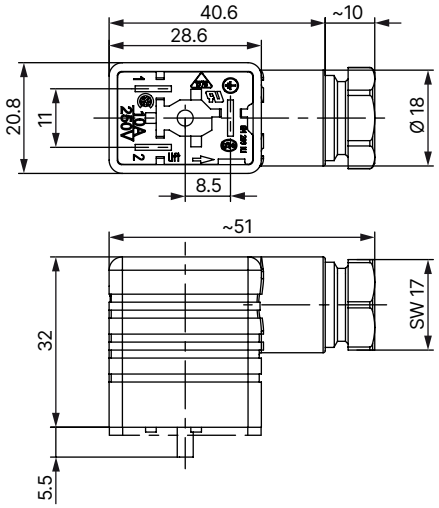	Without wiring (standard)	2...250 V AC/DC	423845
		With LED	24 V AC/DC	423849
		With LED and free-wheeling diode	12...24 V AC/DC	423851
		With rectifier, LED and varistor	12...24 V AC/DC	423853
			2...250 V AC/DC	423854

Phase out

DTS 1000010714 EN Version: - Status: PO (Phase out | Phase out | Phase out) printed: 28.10.2026