







Direct-acting 2/2 or 3/2-way pivoted armature valve

- Direct-acting, media-separated valve up to DN 8
- Maintenance-free pivoted armature technology
- Vibration-proof, block screwed coil system
- Service-friendly, robust manual override
- Explosion-proof variants

Product variants described in the data sheet may differ from the product presentation and description.

Can be combined with



Type 1087
Timer,
form A according to
DIN EN 175301-803



Type 2518
Cable plug,
form A according to
DIN EN 175301-803



Type 2509
Cable plug,
form A according to
DIN EN 175301-803

Type description

The 0121 valve is a direct-acting, media separated pivoted armature valve. It is available as a 2/2 and 3/2-way variant. As a 3/2-way variant, it can be used as a distributor or mixing valve. Various diaphragm materials and circuit functions are available depending on the actual application. The range of bodies includes stainless steel, PTFE and PVC. The solenoid coils are moulded with a chemically resistant epoxy. Since the coil system is separated from the medium by a diaphragm, the valve is especially suitable for critical media such as aggressive acids and lyes. The 0121 is equipped with manual override for start-up and testing. To reduce energy demands, all the coils can be delivered with electronic power reduction or as an impulse variant. The switching status can be indicated via position feedback as a binary or NAMUR signal.

DTS 1000010881 EN Version: A Status: RL (released | freigegeben | valide) printed: 28.10.2026

© Christian Bürkert GmbH & Co. KG, Subject to alteration

Visit product website

bürkert
FLUID CONTROL SYSTEMS

Table of contents

1. General technical data 3

2. Circuit functions 5

3. Approvals and conformities 6

3.1. General notes ... 6
3.2. Conformity ... 6
3.3. Standards ... 6
3.4. Explosion protection ... 6
3.5. North America (USA/Canada) ... 6

4. Materials 7

4.1. Bürkert resistApp ... 7
4.2. Material specifications ... 7

5. Dimensions 8

5.1. Standard variant ... 8
5.2. Explosion-proof variant ... 9
Terminal box variant ... 9
Cable variant ... 9

6. Product connections 10

6.1. Port connection ... 10
Pin assignment standard variant ... 10
Pin assignment explosion-proof variant ... 10

7. Performance specifications 11

7.1. Pressure range and flow rate ... 11
Standard variant ... 11
Explosion-proof variant ... 11

8. Product accessories 12

8.1. Accessories standard variant ... 12
8.2. Accessories explosion-proof variant ... 12
8.3. Cable glands for ATEX/IECEx terminal box ... 13
8.4. Special tool to turn the terminal box ... 13

9. Ordering information 13

9.1. Bürkert eShop ... 13
9.2. Bürkert product filter ... 14
9.3. Bürkert Product Enquiry Form ... 14
9.4. Ordering chart ... 14
Standard variant ... 14
Explosion-proof variant ... 15
9.5. Ordering chart accessories ... 15
Cable plug Type 2518, form A according to DIN EN 175301 - 803 ... 15
Cable plug Type 2509, form A according to DIN EN 175301 - 803 ... 16
Cable glands for ATEX/IECEx terminal box ... 16
Mounting plate complete for DIN rail mounting ... 16
Circlip ... 17

DTS 1000010881 EN Version: A Status: RL (released | freigegeben | valide) printed: 28.10.2026

1. General technical data

Product properties	
Dimensions	Further information can be found in chapter "5. Dimensions" on page 8.
Materials	
Seal	FKM FFKM EPDM
Body	PTFE PVC (resistant according to DIN 8062, 8061) Stainless steel 1.4401 PVDF (on request)
Material resistance	Further information can be found in chapter "4.1. Bürkert resistApp" on page 7.
Weight	
Standard variant	Stainless steel body: 0.9 kg PVC body: 0.38 kg PTFE body: 0.5 kg
Explosion-proof variant	Stainless steel body: 1.15 kg PVC body: 0.62 kg PTFE body: 0.75 kg
Orifice	DN 2...DN 8 FFKM only possible up to DN 6.0
Circuit function	A, B, C, D, E and F Further information can be found in chapter "2. Circuit functions" on page 5.
Thermal insulation class of solenoid coil	Epoxy coil class H
Performance data	
Duty cycle	
With stainless steel	100 % continuous operation
With PTFE	40 % duty cycle (60 % intermittent operation) in 10 min at 8 W variant 100 % continuous operation for 5 W variant or high-performance electronic
With PVC	10 % duty cycle (10 min) 100 % continuous operation for variant with high-performance electronic
Switching frequency	
Standard variant	Max. 100/min with AC Max. 10/min for UC (high-performance electronic)
Explosion-proof variant	Medium temperature up to + 70 °C: max. 20/min Medium temperature up to + 90 °C: max. 5/min
Switching time [1,] standard variant	
Frequency AC	Opening: 20 ms Closing: 11 ms
Frequency DC	Opening: 11 ms Closing: 8 ms
Response time [1,] explosion-proof variant	
Orifice DN 2...DN 8	Opening: 30 ms Closing: 40 ms
Electrical data	
Power consumption standard	
Frequency AC	Inrush: 30 VA Hold: 15 VA Hold: 8 W
Frequency DC	Cold: 11 W Warm: 8 W
Power consumption explosion-proof variant	
Frequency AC/DC	Inrush: 40 W Hold: 3 W

DTS 1000010881 EN Version: A Status: RL (released | freigegeben | valide) printed: 28.10.2026

Voltage	
Standard variant	24 V 50 Hz, 110 V 50 Hz, 230 V 50 Hz, 120 V 60 Hz, 240 V 60 Hz, 12 V DC, 24 V DC (further voltages on request)
Explosion-proof variant	24 V, 230 V (further voltages on request)
Voltage tolerance	± 10 %
Medium data	
Operating medium	
With FKM	Oxydizing acids and substances, hot oils with additives, salt solutions, waste gases
With FFKM	Aggressive mediums, hot air, hot oils, aromatics, ether, esther, ketones
With EPDM	Alkalis, acids to medium concentrations, alkaline washing and bleaching lyes
All Materials	Further information can be found in chapter "4.1. Bürkert resistApp" on page 7
Medium temperature standard variant	
With body material PTFE or stainless steel	EPDM: - 30 °C...+ 90 °C FKM: - 10 °C...+ 90 °C FFKM: - 10 °C...+ 90 °C
With body material PVC	EPDM: - 30 °C...+ 50 °C FKM: - 10 °C...+ 50 °C FFKM: - 10 °C...+ 50 °C
Medium temperature explosion-proof variant	
With body material PTFE or stainless steel	EPDM: - 20 °C...+ 90 °C FKM: - 10 °C...+ 90 °C FFKM: - 10 °C...+ 90 °C
With body material PVC	EPDM: - 20 °C...+ 50 °C FKM: - 10 °C...+ 50 °C FFKM: - 10 °C...+ 50 °C
Viscosity	Max. 37 mm²/s
Product connections	
Electrical connection	
Standard variant	Plug contacts according to DIN EN 175 301 - 803 form A for cable plug **Type 2518** ▶ Plug contacts according to DIN EN 175 301 - 803 form A for cable plug **Type 2509** ▶ (Also available with pressed-in cable or terminal box on request.) Further information can be found in chapter "9.5. Ordering chart accessories" on page 15.
Explosion-proof variant	Pressed-in cable cable (HO5RN-F3G, 3 × 0.75 mm²) Terminal box without safety fuse (Information about ACP016 see operating manual.)
Approvals and conformities	
Degree of protection	
Standard variant	IP65 with cable plug
Explosion-proof variant	IP65
Explosion protection	Further information can be found in chapter "3.4. Explosion protection" on page 6.
North America (USA/Canada)	Further information can be found in chapter "3.5. North America (USA/Canada)" on page 6.
Environment and installation	
Installation	As required, preferably with actuator upright
Ambient temperature	
Standard variant	Max. + 50 °C
Explosion-proof variant	Max. + 55 °C

1.) Measurement at + 20 °C, 6 bar at the valve outlet, opening: pressure build-up 0...90 %, closing: pressure reduction 100...10 %

DTS 1000010881 EN Version: A Status: RL (released | freigegeben | valide) printed: 28.10.2026

2. Circuit functions

Symbol	Description
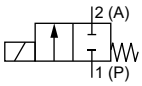	**Circuit function A (CF A)** 2/2-way solenoid valve Direct-acting Normally closed
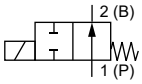	**Circuit function B (CF B)** 2/2-way solenoid valve Direct-acting Normally open
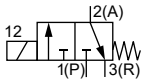	**Circuit function C (CF C)** 3/2-way solenoid valve Direct-acting Normally closed
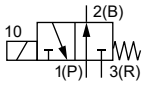	**Circuit function D (CF D)** 3/2-way solenoid valve Direct-acting Normally open
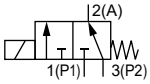	**Circuit function E (CF E)** 3/2-way mixing valve (solenoid valve)
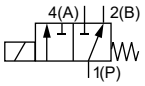	**Circuit function F (CF F)** 3/2-way distribution valve (solenoid valve) Direct-acting

DTS 1000010881 EN Version: A Status: RL (released | freigegeben | valide) printed: 28.10.2026

3. Approvals and conformities

3.1. General notes

- The approvals and conformities listed below must be stated when making enquiries. This is the only way to ensure that the product complies with all required specifications.
- Not all available variants can be supplied with the below mentioned approvals or conformities.

3.2. Conformity

In accordance with the Declaration of Conformity, the product is compliant with the EU Directives.

3.3. Standards

The applied standards which are used to demonstrate compliance with the EU Directives are listed in the EU-Type Examination Certificate and/or the EU Declaration of Conformity.

3.4. Explosion protection

<table>
<tr><th>Approval</th><th>Description</th></tr>
<tr><td></td><td>Optional: Explosion protection according to category 2 (zone 1/21)

Ex marking of the components according to the following table:

<table>
<tr><th colspan="2">Coil Type ACP016</th></tr>
<tr><th>Coils with cable outlet</th><th>Coils with terminal box</th></tr>
<tr><td>ATEX:
EPS 16 ATEX 1 111 X
II 2 G Ex mb IIC T4 Gb
II 2 D Ex mb IIIC T130 °C Db

IECEx:
IECEx EPS 16.0049X
Ex mb IIC T4 Gb
Ex mb IIIC T130 °C Db</td><td>ATEX:
PTB 15 ATEX 1011 U
II 2G Ex eb mb IIC T4 Gb
II 2D EX mb tb IIIC T130 °C

IECEx:
IECEx PTB 15.0037 U
II eb mb IIC T4 Gb
II mb tb IIIC T130 °C Db</td></tr>
</table>
</td></tr>
</table>

3.5. North America (USA/Canada)

Approval	Description
c UL us LISTED SOLENOID FOR USE IN HAZARDOUS LOCATIONS E504714	**Optional (valid for coils): UL Hazardous Locations – Explosion Protection** UL Listed for Hazardous Locations for USA and Canada Class I, Zone 1 Class I, Division 2, Group A, B, C and D Class II + III, Division 2, Group F and G
	Optional (valid for valves): UL Recognized for the USA The valves are UL Recognized for the USA according to: • UL 429 (electrically operated valves) and UL 429A (Electrically Operated Valves for Fire Protection Service)
	Optional (valid for valves): CSA for Canada The valves are CSA approved for Canada according to: • CSA 139 (electrically operated valves)
FM C US APPROVED	**Optional (valid for coils): FM (Factory Mutual) – Explosion Protection** FM for Hazardous Locations for USA and Canada Class I, Zone 1 Class I, Division 1, Groups A, B, C and D Class II + III, Division 1, Groups E, F and G

DTS 1000010881 EN Version: A Status: RL (released | freigegeben | valide) printed: 28.10.2026

4. Materials

4.1. Bürkert resistApp

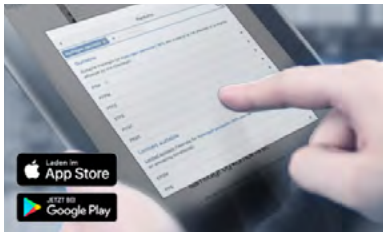

Bürkert resistApp – Chemical resistance chart

You want to ensure the reliability and durability of the materials in your individual application case? Verify your combination of media and materials on our website or in our resistApp.

Start chemical resistance check

4.2. Material specifications

Note:
This sectional drawing shows the standard variant with PVC housing and FKM seal.

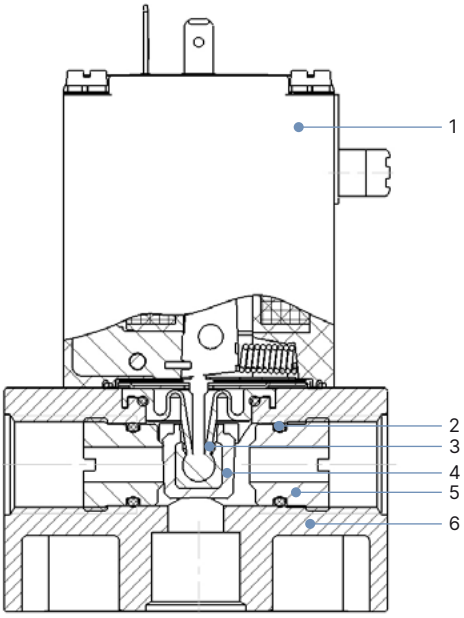

No.	Element	Material
1	Coil	Epoxy
2	O-ring	FKM, FFKM, EPDM
3	Toggle pin	PTFE
4	Seal	FKM, FFKM, EPDM
5	Seat	PTFE PVC (resistant according to DIN 8062, 8061) Stainless steel 1.4401
6	Valve body	PTFE PVC (resistant according to DIN 8062, 8061) Stainless steel 1.4401

DTS 1000010881 EN Version: A Status: RL (released | freigegeben | valide) printed: 28.10.2026

5. Dimensions

5.1. Standard variant

Note:

- Dimensions in mm
- The dimensions of the cable plug Type 2518 can be found in chapter "Cable plug Type 2518, form A according to DIN EN 175301-803" on page 15.
- The dimensions of the cable plug Type 2509 can be found in chapter "Cable plug Type 2509, form A according to DIN EN 175301-803" on page 16.

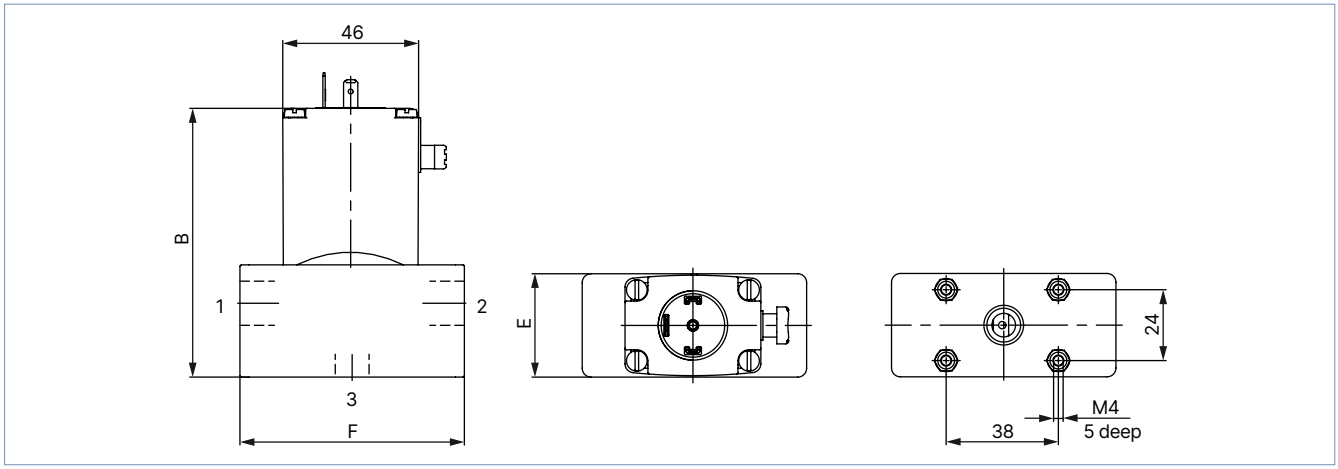

Body material	D	B	E	F
Stainless steel	G ¼	89	32	76
PVC	G ⅜	91	35	65
PTFE	G ⅜	91	35	76

DTS 1000010881 EN Version: A Status: RL (released | freigegeben | valide) printed: 28.10.2026

5.2. Explosion-proof variant

Terminal box variant

Note:

- Dimensions in mm
- Attaching device: M4 × 5 holes on the bottom of the housing on the hole pattern 38 × 24 mm

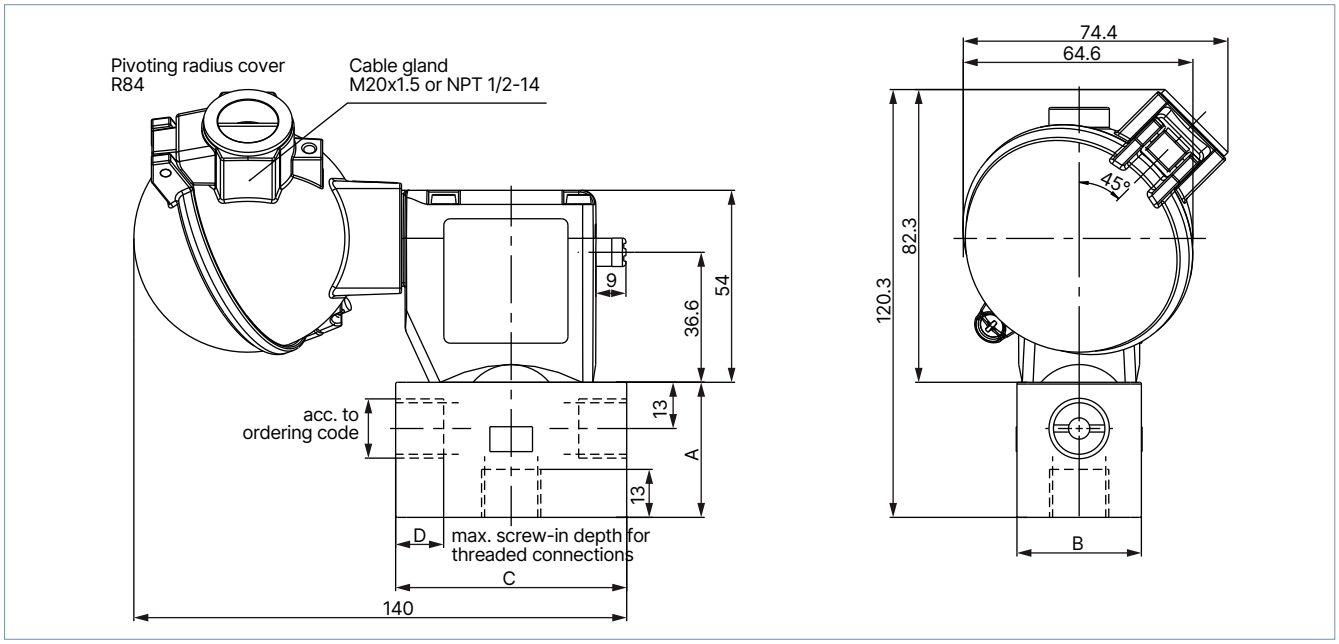

Body material	A	B	C	D
Stainless steel	36	32	76	19.5
PVC	38	35	65	17
PTFE	38	35	76	22.5

Cable variant

Note:

- Dimensions in mm
- Attaching device: M4 × 5 holes on the bottom of the housing on the hole pattern 38 × 24 mm

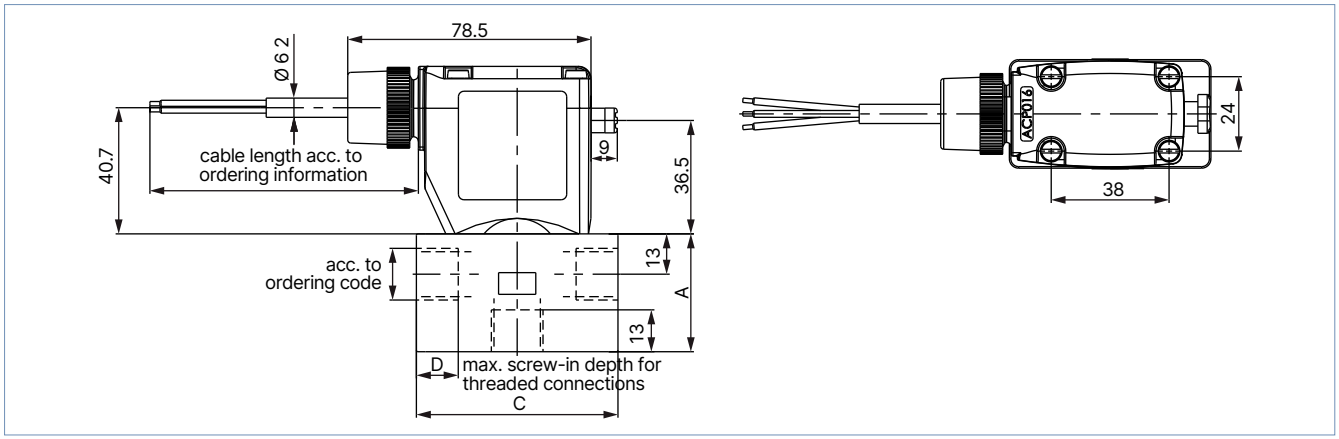

Body material	A	C	D
Stainless steel	36	76	19.5
PVC	38	65	17
PTFE	38	76	22.5

DTS 1000010881 EN Version: A Status: RL (released | freigegeben | valide) printed: 28.10.2026

6. Product connections

6.1. Port connection

Pin assignment standard variant

Note:
The pin assignment (marked No. 1, 2 and 3 in the drawing) depends on the circuit function. In the table, compare the respective pin assignment with the corresponding circuit function.

Circuit function	Connection 1	Connection 2	Connection 3	2-way	3-way
A	A	P	–	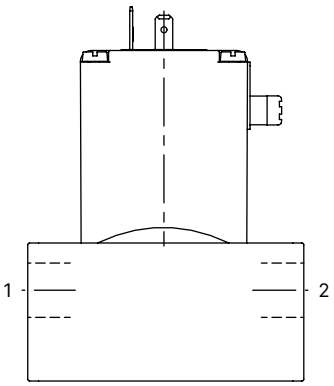	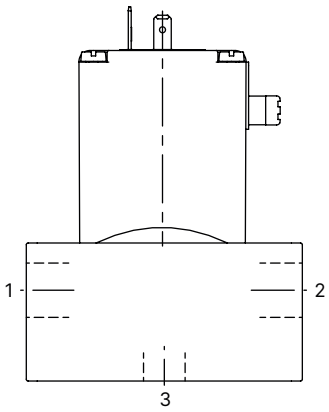
B	P	B	–		
C	P	R	A		
D	R	P	B		
E	P1	P2	A		
F	A	B	P		

Pin assignment explosion-proof variant

Note:
The pin assignment (marked No. 1, 2 and 3 in the drawing) depends on the circuit function. In the table, compare the respective pin assignment with the corresponding circuit function.

Circuit function	Connection 1	Connection 2	Connection 3	2-way	3-way
A	A	P	–	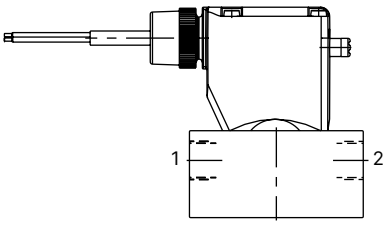	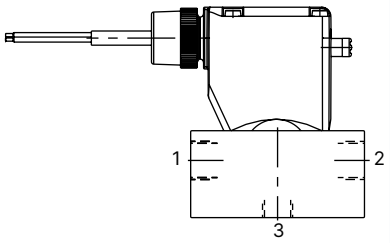
B	P	B	–		
C	P	R	A		
D	R	P	B		
E	P1	P2	A		
F	A	B	P		

DTS 1000010881 EN Version: A Status: RL (released | freigegeben | valide) printed: 28.10.2026

7. Performance specifications

7.1. Pressure range and flow rate

Standard variant

Circuit function	DN	K_V value water	Pressure range [1.]	
			Frequency AC [2.] (50 or 60 Hz)	Frequency DC [2.]
		[m³/h]	[bar]	[bar]
A / F	2	0.1	0...6	0...3
	4	0.3 [3.]	0...4	0...2
	6	0.6 [4.]	0...2	0...1
	8	1.0	0...1	0...0.8
C / D	2	0.1	0...3	0...1.5
	4	0.3 [3.]	0...2	0...1
	6	0.6 [4.]	0...1	0...0.5
	8	1.0	0...0.3	0...0.3
B	2	0.1	0...6	0...3
	4	0.3 [3.]	0...4	0...2
	6	0.6 [4.]	0...2	0...1
	8	1.0	0...1	0...0.5
E	2	0.1	0...3	0...1.5
	4	0.3 [3.]	0...2	0...1
	6	0.6 [4.]	0...1	0...0.5
	8	1.0	0...0.2	0...0.2

1.) Pressure data: overpressure to the atmospheric pressure (deviating pressure range for 5 W variant)
2.) Heat output 8 W
3.) Nominal diameter DN 4 and seal material FKM resp. FFKM K_V value reduces to 0.24 m³/h.
4.) Nominal diameter DN 6 and seal material FKM resp. FFKM K_V value reduces to 0.48 m³/h.

Explosion-proof variant

Circuit function	DN	K_V value water [1.]	Pressure range [2.]
		[m³/h]	[bar]
A / F	2	0.1	0...6
	4	0.3 [3.]	0...4
	6	0.6 [4.]	0...2
	8	1.0	0...1
C / D	2	0.1	0...3
	4	0.3 [3.]	0...2
	6	0.6 [4.]	0...1
	8	1.0	0...0.3
B	2	0.1	0...6
	4	0.3 [3.]	0...4
	6	0.6 [4.]	0...2
	8	1.0	0...1
E	2	0.1	0...3
	4	0.3 [3.]	0...2
	6	0.6 [4.]	0...1
	8	1.0	0...0.2

1.) Measurement at + 20 °C, 1 bar at the valve inlet and free outlet
2.) Pressure data: overpressure to the atmospheric pressure
3.) Nominal diameter DN 4 and seal material FKM resp. FFKM K_V value reduces to 0.24 m³/h.
4.) Nominal diameter DN 6 and seal material FKM resp. FFKM K_V value reduces to 0.48 m³/h.

DTS 1000010881 EN Version: A Status: RL (released | freigegeben | valide) printed: 28.10.2026

8. Product accessories

8.1. Accessories standard variant

Option	Variable code	Specifications
Oxygen variants	NL02	Suitable for applications with oxygen (non-metal materials that are in contact with the medium, are tested and approved according to BAM)
Increased purity requirements, e.g. oil-free, grease-free and silicone-free	NL50/ NL05	Wetted parts are specially cleaned and packaged in accordance with the valves
Electrical feedback	LF03	See **Type 1060** ▶. Function as opener, closer or toggle switch depending on the connection (no IP65 achievable)
High-performance electronics	CZ05	Inrush power 60 W, nominal holding current 3 W; with plastic variants 100 % duty cycle is now feasible
Vacuum variant	NA02	Suitable for vacuum up to - 0.98 bar
Improved purity and tightness requirements	NA03	Wetted parts are specially cleaned and leak tested to 10^{-4} mbar x l/sec
Coil with reduced power (5 W)	–	The devices have a lower pressure range; 100% duty cycle is possible with plastic variants
Cable plug	JHxx/ JGxx/ JFxx	A cable plug is part of the delivery. Cable plug variants (according to DIN EN 175301 - 803 form A), see separate data sheet **Type 2518** ▶ and **Type 2509** ▶
Approvals	PD02	UR (UL Recognized)/CSA approval
	PE95	UL (UL Listed) approval
	PR05	cFMus approved coil Class I, Division 1, Groups A, B, C and D - T4 Class II, Division 1, Groups E, F and G - T4 Class III, Division 1 - T4 Class I, Zone 1, AEx mb IIC T4 Gb, Zone 21 AEx mb IIIC T130 °C Db Ex mb IIC T4 Gb; Ex mb IIIC T130 °C Db
	PU15	UL Listed for Hazardous Locations for USA and Canada, Class I, Zone 1, AEx eb mb IIC T4; Zone 21, AEx mb tb IIIC T130 °C / Class I, Div 2, Group A,B,C,D; Class II+III, Div 2, Group F,G
	PX41	EPS 16 ATEX 1111 X/IECEx EPS 16.0049X, 2G T4 IIC/2D T130 °C IIIC, Tamb - 40 °C...+ 60 °C, single and block mounting
Possible conformities (depending on the assembly)	–	EAC, drinking water, FDA

8.2. Accessories explosion-proof variant

Option	Variable code	Specifications
Oxygen variants	NL02	Suitable for applications with oxygen (non-metal materials that are in contact with the medium, are tested and approved according to BAM)
Increased purity requirements, e.g. oil-free, grease-free and silicone-free	NL50/ NL05	Wetted parts are specially cleaned and packaged in accordance with the valves
Vacuum variant	NA02	Suitable for vacuum up to - 0.98 bar
Increased purity and tightness requirements	NA03	Wetted parts are specially cleaned and leak tested to 10^{-4} mbar x l/sec

DTS 1000010881 EN Version: A Status: RL (released | freigegeben | valide) printed: 28.10.2026

8.3. Cable glands for ATEX/IECEx terminal box

Note:
A polyamide cable gland is included in the scope of delivery. A nickel-plated brass variant can be ordered for a surcharge, see "Cable glands for ATEX/IECEx terminal box" on page 16.

Description	Ex approvals		Dimensions	
	Certification	Identification		
Ex cable gland, nickel-plated brass, 6...13 mm 	PTB 04 ATEX 1112 X, IECEx PTB 13.0027X	II 2 G Ex e IIC Gb, II 2 D Ex tb IIIC Db IP68	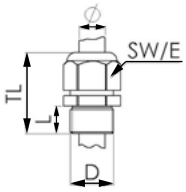	TL 29...37 mm L 6 mm D 20 mm SW 24 mm E 27 mm
Ex cable gland, Polyamide, 7...13 mm 	PTB 13 ATEX 1015 X, IECEx PTB 13.0034X	II 2 G Ex e IIC Gb, II 2 D Ex tb IIIC Db IP68	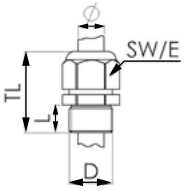	TL 36...45 mm L 10 mm D 20 mm SW 24 mm E 28 mm

8.4. Special tool to turn the terminal box

Note:
This special tool is not included in the scope of delivery of the valve, see "Cable glands for ATEX/IECEx terminal box" on page 16.

Description	Components of the set
Set SC02-AC10 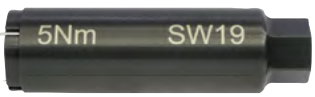	• Special tool • Service manual

9. Ordering information

9.1. Bürkert eShop



Bürkert eShop – Easy ordering and quick delivery

You want to find your desired Bürkert product or spare part quickly and order directly? Our online shop is available for you 24/7. Sign up and enjoy all the benefits.

Order online now

DTS 1000010881 EN Version: A Status: RL (released | freigegeben | valide) printed: 28.10.2026

9.2. Bürkert product filter



Bürkert product filter – Get quickly to the right product

You want to select products comfortably based on your technical requirements?
Use the Bürkert product filter and find suitable articles for your application quickly and easily.

Try out our product filter

9.3. Bürkert Product Enquiry Form

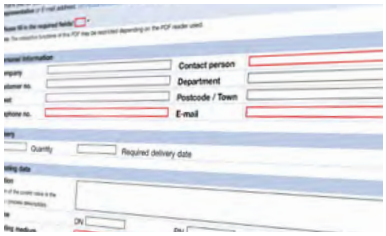

Bürkert Product Enquiry Form – Your enquiry quickly and compactly

Would you like to make a specific product enquiry based on your technical requirements? Use our Product Enquiry Form for this purpose. There you will find all the relevant information for your Bürkert contact. This will enable us to provide you with the best possible advice.

Fill out the form now

9.4. Ordering chart

Standard variant

Note:
Articles with reduced delivery time

Circuit function	Port connection	Orifice	Body or seat material	Seal material	Article no.			
					024/DC	024/50	230/50	120/60
	[inch]	[mm]			[V/Hz]	[V/Hz]	[V/Hz]	[V/Hz]
With plastic or stainless steel body, manual override and cable plug (UC with silicon cable [3.])								
CF A [1.] 2/2-way solenoid valve Direct-acting Normally closed 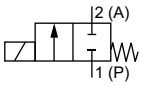	G ⅜	4.0	PVC	FKM	049654	048940	047859	–
	G ⅜	4.0	PVC	EPDM	050795	050085	049267	–
	G ⅜	6.0	PVC	FKM	048749	049348	047810	049228
	G ⅜	6.0	PVC	EPDM	049337	049678	049291	–
	G ⅜	8.0	PVC	FKM	049697 [3.]	052800	052302	–
	G ⅜	8.0	PVC	EPDM	048698 [3.]	050967	050701	450543
	G ¼	4.0	Stainless steel	FKM	055244	056934	052441	–
	G ¼	4.0	Stainless steel	EPDM	136290	–	136292	–
	G ¼	6.0	Stainless steel	FKM	040482	057086	054595	–
	G ¼	6.0	Stainless steel	EPDM	049113	–	–	–
	G ⅜	4.0	PTFE	FFKM [2.]	122632 [3.]	–	077191	457453 [4.]
	G ⅜	4.0	PTFE	FFKM	151733	–	136205	–
	G ⅜	4.0	PTFE	FFKM	132098 [3.]	–	–	–
CF B [1.] 2/2-way solenoid valve Direct-acting Normally open 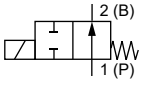	G ⅜	4.0	PVC	FKM	–	–	050158	–
	G ⅜	6.0	PVC	EPDM	135416 [3.]	–	–	–
	G ⅜	4.0	PTFE	FFKM	132096 [3.]	–	–	–
	G ⅜	6.0	PTFE	FFKM	132097 [3.]	–	–	–

DTS 1000010881 EN Version: A Status: RL (released | freigegeben | valide) printed: 28.10.2026

Circuit function	Port connection	Orifice	Body or seat material	Seal material	Article no.			
					024/DC	024/50	230/50	120/60
	[inch]	[mm]			[V/Hz]	[V/Hz]	[V/Hz]	[V/Hz]
CF C 3/2-way solenoid valve Direct-acting Normally closed 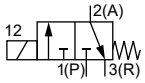	G ⅜	4.0	PVC	FKM	051701	–	–	–
	G ⅜	6.0	PVC	EPDM	–	–	051577	–
	G ⅜	4.0	PTFE	FFKM	–	–	130625	–
	G ⅜	4.0	PTFE	FKM	044771	–	–	–
	G ⅜	6.0	PTFE	FFKM [2.]	131364 [3.]	–	–	–
	G ¼	4.0	Stainless steel	EPDM	–	–	135858	–
CF E 3/2-way mixing valve (solenoid valve) 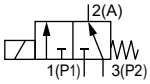	G ¼	4.0	Stainless steel	FKM	–	–	042457	–
	G ⅜	6.0	PVC	EPDM	048673	–	–	–
	G ⅜	4.0	PTFE	FFKM	151715	–	130934	–
	G ⅜	4.0	PTFE	FFKM [2.]	135028	–	–	–
CF F 3/2-way distribution valve (solenoid valve) Direct-acting 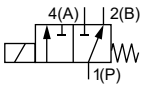	G ⅜	6.0	PVC	FKM	049533	052181	047916	–
	G ⅜	6.0	PVC	EPDM	040062	048760	050491	–
	G ⅜	4.0	PTFE	FFKM [2.]	–	–	124239	–
	G ⅜	6.0	PTFE	FFKM	141134	–	–	–
	G ⅜	6.0	PTFE	FKM	051256	–	–	–

– = not available

1.) The listed article numbers and circuit functions have a housing with straight pass.

2.) The valve seat seal material is FFKM, the O-ring seal material (seat) is FKM.

3.) The listed article numbers are equipped with a high-performance coil (60 W inrush, 3 W operation) and injected cable.

4.) The cable plug is not included in the scope of delivery.

Explosion-proof variant

Note:
ATEX/IECEx variants are available on request. Further information can be found in chapter "3.4. Explosion protection" on page 6.

9.5. Ordering chart accessories

Cable plug Type 2518, form A according to DIN EN 175301 - 803

Note:

- Dimensions in mm
- For further variants see data sheet **Type 2518** ▶.

Cable plug	Dimensions	Variant	Voltage	Article no.
	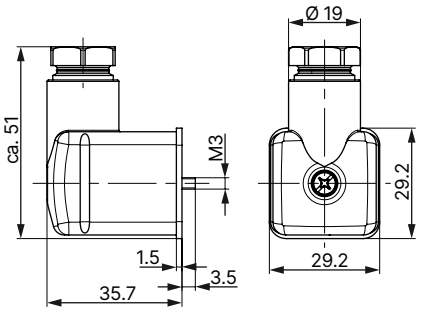	Without wiring (AC/DC)	0...250 V AC/DC	314802
		With LED (AC/DC)	12...24 V AC/DC	314812
		With LED and varistor (AC/DC)	12...24 V AC/DC	314820
		With rectifier, LED and varistor	12...24 V AC/DC	314816

DTS 1000010881 EN Version: A Status: RL (released | freigegeben | valide) printed: 28.10.2026

Cable plug Type 2509, form A according to DIN EN 175301 - 803

Note:

- Dimensions in mm
- Without wiring (standard)
- Refer to data sheet **Type 2509** ▶ for more information about the cable plug.

Cable plug	Dimensions	Variant	Voltage	Article no.
	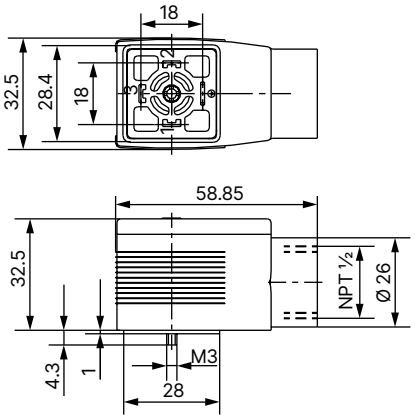	Without wiring	0...250 V AC/DC	137943

Cable glands for ATEX/IECEx terminal box

Note:

- A polyamide cable gland is included in the scope of delivery. A nickel-plated brass variant can be ordered for a surcharge.
- Refer to "8.3. Cable glands for ATEX/IECEx terminal box" on page 13 for more information about Ex cable glands.
- Refer to "8.4. Special tool to turn the terminal box" on page 13 for more information about special tool.

Description	Article no.
Ex cable gland, nickel-plated brass, 6...13 mm [1.]	773278
Ex cable gland, polyamide, 7...13 mm [1.]	773277
Set SC02-AC10: special tool [2.] incl. service manual	293488

1.) Cable diameter
2.) Not included in the scope of delivery of the valve

Mounting plate complete for DIN rail mounting

Description	Article no.
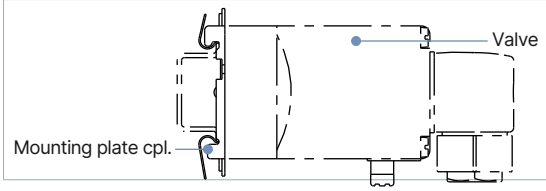	013253

1.) Use only with 2/2-way straight-through valves

DTS 1000010881 EN Version: A Status: RL (released | freigegeben | valide) printed: 28.10.2026

Circlip

Description	Article no.
Circlip to prevent inadvertent manual actuation 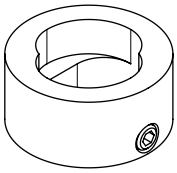	013372

DTS 1000010881 EN Version: A Status: RL (released | freigegeben | valide) printed: 28.10.2026