Dual Display PID Temperature Controllers

TCN Series

INSTRUCTION MANUAL

TCD242000AB

Autonics

Thank you for choosing our Autonics product.
Be sure to read and fully understand the instruction manual and other manuals before using the product.
For your safety, read and follow the safety precautions, warnings, cautions, and handling instructions listed in the instruction manual, other manuals, and the Autonics website.
Keep this document in a location where it can be easily accessed.

Visit the Autonics website (www.autonics.com or QR code) for the latest information. Manuals, CAD files, certifications, software, etc. are available. The dimensions, specifications, certifications, etc. are subject to change without notice for product improvement. Certain models may be discontinued without notice.

Safety Considerations

- Observe all 'Safety Considerations' for safe and proper operation to avoid hazards.
- ⚠ symbol indicates caution due to special circumstances in which hazards may occur.

⚠ Warning Failure to follow instructions may result in serious injury or death

01. Fail-safe device must be installed when using the unit with machinery that may cause serious injury or substantial economic loss.(e.g. nuclear power control, medical equipment, ships, vehicles, railways, aircraft, combustion apparatus, safety equipment, crime/disaster prevention devices, etc.)
Failure to follow this instruction may result in personal injury, economic loss or fire.
02. Do not use or store the unit in the place where flammable/explosive/ corrosive gas, high humidity, direct sunlight, radiant heat, vibration, impact or salinity may be present.
Failure to follow this instruction may result in explosion or fire.
03. Install on a device panel to use.
Failure to follow this instruction may result in fire or electric shock.
04. Do not connect, repair, or inspect the unit while connected to a power source.
Failure to follow this instruction may result in fire or electric shock.
05. Check 'Connections' before wiring.
Failure to follow this instruction may result in fire.
06. Do not disassemble or modify the unit.
Failure to follow this instruction may result in fire or electric shock.

⚠ Caution Failure to follow instructions may result in injury or product damage

01. When connecting the power input and relay output, use AWG 20 (0.50 mm²) cable or over, and tighten the terminal screw with a tightening torque of 0.74 to 0.90 N m.
When connecting the sensor input and communication cable without dedicated cable, use AWG 28 to 16 cable and tighten the terminal screw with a tightening torque of 0.74 to 0.90 N m.
Failure to follow this instruction may result in fire or malfunction due to contact failure.
02. Use the unit within the rated specifications.
Failure to follow this instruction may result in fire or product damage
03. Use a dry cloth to clean the unit, and do not use water or organic solvent.
Failure to follow this instruction may result in fire or electric shock.
04. Keep the product away from metal chip, dust, and wire residue which flow into the unit.
Failure to follow this instruction may result in fire or product damage.

Cautions during Use

- Follow instructions in 'Cautions during Use'. Otherwise, it may cause unexpected accidents.
- Check the polarity of the terminals before wiring the temperature sensor.
- For RTD temperature sensor, wire it as 3-wire type, using cables in same thickness and length. For thermocouple (TC) temperature sensor, use the designated compensation wire for extending wire.
- Keep away from high voltage lines or power lines to prevent inductive noise. In case installing power line and input signal line closely, use line filter or varistor at power line and shielded wire at input signal line. Do not use near the equipment which generates strong magnetic force or high frequency noise.
- Install a power switch or circuit breaker in the easily accessible place for supplying or disconnecting the power.
- Do not use the unit for other purpose (e.g. voltmeter, ammeter), but temperature controller.
- When changing the input sensor, turn off the power first before changing. After changing the input sensor, modify the value of the corresponding parameter.
- 24 VAC~, 24-48 VDC⎓ power supply should be insulated and limited voltage/current or Class 2, SELV power supply device.
- Make a required space around the unit for radiation of heat. For accurate temperature measurement, warm up the unit over 20 min after turning on the power.
- Make sure that power supply voltage reaches to the rated voltage within 2 sec after supplying power.
- Do not wire to terminals which are not used.
- This unit may be used in the following environments.
  - Indoors (in the environment condition rated in 'Specifications')
  - Altitude Max. 2,000 m
  - Pollution degree 2
  - Installation category II

Ordering Information

This is only for reference, the actual product does not support all combinations.
For selecting the specified model, follow the Autonics website .

T C N ❶ ❷ - ❸ ❹ ❺ - ❻

❶ Digit
4: 4 digit

❷ Size
S: DIN W 48 × H 48 mm
M: DIN W 72 × H 72 mm
H: DIN W 48 × H 96 mm
L: DIN W 96 × H 96 mm

❸ Option in/output
2: Alarm 1/2

❹ Power supply
2: 24 VAC 50/60 Hz, 24-48 VDC
4: 100-240 VAC 50/60 Hz

❺ Control output
R: Relay + SSR drive

❻ Wiring type
No mark: Bolt
P: Connector plug connection

Product Components

- Product (+ bracket)
- Instruction manual

Sold Separately

- Terminal protection cover: RSA / RMA / RHA / RLA-COVER

Unit Descriptions



1. PV Display part (red)
- RUN mode: Displays PV (Present value)
- Setting mode: Displays parameter name

2. SV Display part (green)
- RUN mode: Displays SV (Setting value)
- Setting mode: Displays parameter setting value

3. Indicator

Display	Name	Description
AL1/2	Alarm output	Turns ON when the alarm output is ON.
OUT	Control output	Turns ON when control output is ON • CYCLE/PHASE control of SSR drive output: Turns ON when MV is over 3.0% [AC power model]
AT	Auto tuning	Flashes during auto tuning every 1 sec
°C, °F	Unit	Displays selected unit (parameter).

4. Input key

Display	Name
[MODE]	Mode key
[◀], [▼], [▲]	Setting value control key

Installation Method

■ TCN4S

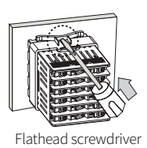

Flathead screwdriver

■ Other Series

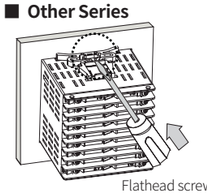

Flathead screwdriver

Insert the unit into a panel, fasten the bracket by pushing with a flathead screwdriver.

Specifications

Series		TCN4□-22R-□	TCN4□-24R-□
Power supply		24 VAC~ 50/60 Hz 24 - 48 VDC⎓	100 - 240 VAC~ 50/60 Hz
Permissible voltage range		90 to 110 % of rated voltage	
Power consumption		AC: ≤ 5 VA, DC: ≤ 3 W	≤ 5 VA
Sampling period		100 ms	
Input specification 01)		K (CA), J (IC), L (IC), T (CC), R (PR), S (PR), Cu50 Ω, DPt100 Ω	
Control output	Relay	250 VAC~ 3 A, 30 VDC⎓ 3 A, 1a	
	SSR	12 VDC⎓ ±2 V, ≤ 20 mA	
Alarm output		250 VAC~ 1 A 1a	
Display type		7 Segment (red, green), LED type	
Control type	Heating, Cooling	ON/OFF, P, PI, PD, PID Control	
Hysteresis		1 to 100 (0.1 to 50.0) °C/°F	
Proportional band (P)		0.1 to 999.9 °C/°F	
Integral time (I)		0 to 9,999 sec	
Derivative time (D)		0 to 9,999 sec	
Control cycle (T)		0.5 to 120.0 sec	
Manual reset		0.0 to 100.0%	
Relay life cycle	Mechanical	≥ 5,000,000 operations	
	Electrical	OUT1/2: ≥ 200,000 operations (load resistance: 250 VAC~ 3 A) AL1/2: ≥ 300,000 operations (load resistance: 250 VAC~ 1 A)	
Dielectric strength		Between the charging part and the case: 1,000 VAC~ 50/60 Hz for 1 min	Between the charging part and the case: 2,000 VAC~ 50/60 Hz for 1 min
Vibration		0.75 mm amplitude at frequency of 5 to 55 Hz in each X, Y, Z direction for 2 hours	
Insulation resistance		≥ 100 MΩ (500 VDC⎓ megger)	
Noise immunity		±2 kV square shaped noise (pulse width: 1 μs) by noise simulator R-phase, S-phase	
Memory retention		≈ 10 years (non-volatile semiconductor memory type)	
Ambient temperature		-10 to 50 °C, storage: -20 to 60 °C (no freezing or condensation)	
Ambient humidity		35 to 85%RH, storage: 35 to 85%RH (no freezing or condensation)	
Insulation type		Mark: ⊡, double or reinforced insulation (dielectric strength between the measuring input part and the power part: 1 kV)	Mark: ⊡, double or reinforced insulation (dielectric strength between the measuring input part and the power part: 2 kV)
Certification		CE UK CA cULus EAC	
Unit weight (packaged)		• TCN4S: ≈ 100 g (≈ 147 g) • TCN4H: ≈ 124 g (≈ 194 g)	• TCN4M: ≈ 133 g (≈ 203 g) • TCN4L: ≈ 179 g (≈ 275 g)

01) Refer to 'Input Type and Using Range' in the product manual.

Errors

Display	Description	Troubleshooting
oPEn	Flashes when input sensor is disconnected or sensor is not connected.	Check input sensor status.
HHHH	Flashes when PV is higher than input range. 01)	When input is within the rated input range, this display disappears.
LLLL	Flashes when PV is lower than input range. 01)	

01) Be careful that when HHHH / LLLL error occurs, the control output may occur by recognizing the maximum or minimum input depending on the control type.

Connections

■ TCN4S

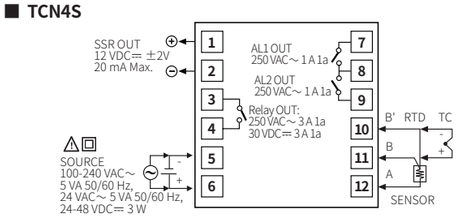

■ TCN4S-□-P

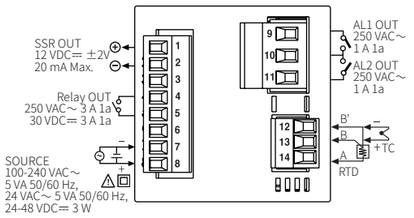

■ TCN4M

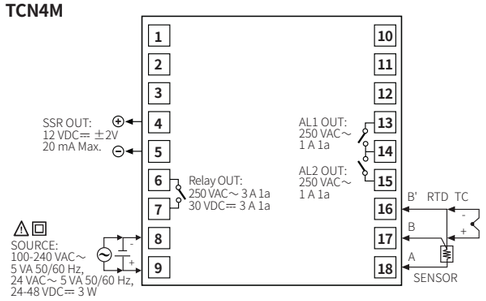

■ TCN4H/L

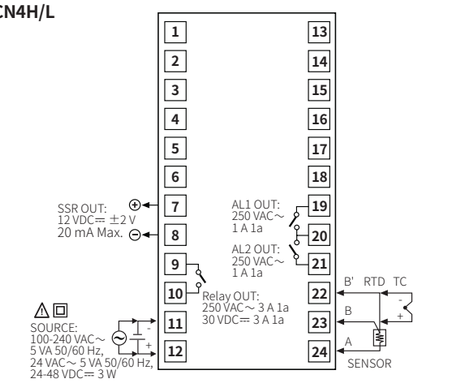

Crimp Terminal Specifications

- Unit: mm, Use the crimp terminal of follow shape.

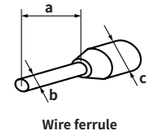

Wire ferrule



Fork crimp terminal

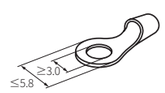

Round crimp terminal

Terminal number	a	b	c
1 to 8	6	≤ 1.7	≤ 3.7
9 to 11	6 to 8	≤ 2.1	≤ 4.2
12 to 14	6 to 8	≤ 1.5	≤ 3.5

18, Bansong-ro 513Beon-gil, Haeundae-gu, Busan, Republic of Korea, 48002
www.autonics.com | +82-2-2048-1577 | sales@autonics.com

Autonics