Technical Data

Original Instructions

ControlLogix I/O Modules Specifications

Bulletin 1756

Topic	Page
Summary of Changes	1
I/O Module Overview	3
AC Digital I/O Modules	7
DC Digital I/O Modules	45
Safety I/O Modules	147
Contact I/O Modules	163
Analog I/O Modules	169
HART I/O Modules	217
Compute Modules	241
Specialty I/O Modules	245
ControlLogix I/O Accessories	269

The ControlLogix® Architecture provides a wide range of input and output modules to span many applications, from high-speed digital to process control. The ControlLogix architecture uses Producer/Consumer technology, which allows input information and output status to be shared among multiple ControlLogix controllers.

Summary of Changes

This publication contains new and updated information as indicated in the following table.

Topic	Page
Corrected 1756-OF8H, 1756-OF8HK Technical Specifications	233
Corrected RTB Specifications	270

Rockwell Automation recognizes that some of the terms that are currently used in our industry and in this publication are not in alignment with the movement toward inclusive language in technology. We are proactively collaborating with industry peers to find alternatives to such terms and making changes to our products and content. Please excuse the use of such terms in our content while we implement these changes.

Bulletin 1756 ControlLogix chassis-based modules provide a full range of digital, diagnostic digital, analog, motion control, specialty I/O, and compute modules to meet your application needs. You can use any of the chassis-based modules in the local chassis of a ControlLogix controller or in a chassis linked to a ControlLogix controller across ControlNet® or EtherNet/IP™ networks.

Catalog Number Explanation

Certain I/O module catalog numbers contain characters at the **end** of the catalog number that indicate additional features.

Character	I/O Type	Description
D	Diagnostic	These modules provide diagnostic features to the point level.
E	Electronic fusing	These modules have internal electronic fusing to help prevent too much current from flowing through the module.
I	Individually isolated	These modules have individually isolated inputs or outputs.
K	Conformal coated	These modules have additional conformal coating and design considerations that add a degree of protection when exposed to harsh, corrosive environments.
XT	Conformal coated	These modules have additional conformal coating and design considerations that add a greater degree of protection when exposed to harsh, corrosive environments.
H	HART interface	These modules send and receive digital information across analog wires between smart devices and control or monitoring systems data using HART (Highway Addressable Remote Transducer) protocol.
S	Scheduled or Safety	These modules offer time-scheduled output control or ensure that ControlLogix control systems operate safely.
SOE	Sequence of Events	These modules offer sub-millisecond time-stamping on a per point basis.

IMPORTANT When a ControlLogix product that is rated for harsh environments (corrosive atmosphere, extended temperature, etc.) is used in a system with other ControlLogix products that have lower specification values, the system is derated to the lowest common value.

EXAMPLE: If the maximum operating temperature specification found in the Technical Data for your ControlLogix-XT module is 70 °C (158 °F) and you pair it with a ControlLogix chassis that is temperature rated to 60 °C (140 °F), your system is derated to 60 °C (140 °F).

To ensure that your system is equipped for harsh environments, compare the corrosive atmosphere, temperature, and other specifications found in the Technical Data publication for each product.

Available 1756 I/O Modules

Module Type	Input Module Catalog Number	Page	Output Module Catalog Number	Page
AC Digital I/O Modules	1756-IA8D, 1756-IA8DK	7	1756-OA8, 1756-OA8K	26
	1756-IA16, 1756-IA16K	10	1756-OA8D	29
	1756-IA16I, 1756-IA16IK	13	1756-OA8E	32
	1756-IA32, 1756-IA32K	16	1756-OA16, 1756-OA16K	35
	1756-IM16I, 1756-IM16IK	19	1756-OA16I, 1756-OA16IK	38
	1756-IN16, 1756-IN16K	22	1756-ON8, 1756-ON8K	41
DC Digital I/O Modules	1756-IB16, 1756-IB16K, 1756-IB16XT	45	1756-OB8, 1756-OB8K	90
	1756-IB16D, 1756-IB16DK	49	1756-OB8EI, 1756-OB8EIK	94
	1756-IB16I, 1756-IB16IK	53	1756-OB16D, 1756-OB16DK	98
	1756-IB16IF, 1756-IB16IFK	57	1756-OB16E, 1756-OB16EK	102
	1756-IB16ISOE, 1756-IB16ISOEK	61	1756-OB16I, 1756-OB16IK	107
	1756-IB32, 1756-IB32K	65	1756-OB16IEF, 1756-OB16IEFK	111
	1756-IC16	68	1756-OB16IEFS, 1756-OB16IEFSK	115
	1756-IG16, 1756-IG16K	72	1756-OB16IS	119
	1756-IH16I, 1756-IH16IK	76	1756-OB32, 1756-OB32K, 1756-OB32XT	123
	1756-IH16ISOE, 1756-IH16ISOEK	79	1756-OC8, 1756-OC8K	127
	1756-IV16, 1756-IV16K	82	1756-OG16, 1756-OG16K	131
	1756-IV32, 1756-IV32K	86	1756-OH8I	135
			1756-OV16E	138
			1756-OV32E, 1756-OV32EK	142
Safety I/O Modules	1756-IB16S	147	1756-OBV8S	154
Contact I/O Modules			1756-OX8I, 1756-OX8IK	163
			1756-OW16I, 1756-OW16IK	166
Analog I/O Modules	1756-IF4FXOF2F, 1756-IF4FXOF2FK	169	1756-OF4, 1756-OF4K	204
	1756-IF8, 1756-IF8K	174	1756-OF8, 1756-OF8K	208
	1756-IF8I, 1756-IF8IK	179	1756-OF8I, 1756-OF8IK	212
	1756-IF16, 1756-IF16K	184		
	1756-IRT8I, 1756-IRT8IK	189		
	1756-IR12, 1756-IR12K	195		
	1756-IT16, 1756-IT16K	199		
HART I/O Modules	1756-IF8H, 1756-IF8HK	217	1756-OF8H, 1756-OF8HK	233
	1756-IF8IH, 1756-IF8IHK	221	1756-OF8IH, 1756-OF8IHK	237
	1756-IF16H, 1756-IF16HK	225		
	1756-IF16IH, 1756-IF16IHK	229		
Compute Modules	1756-CMEE1Y1	241		
	1756-CMS1B1, 1756-CMS1C1, 1756-CMS1D1, 1756-CMS1H1	243		
Specialty I/O Modules	1756-CFM, 1756-CFMK	245	1756-LSC8XIB8I, 1756-LSC8XIB8IK	258
	1756-HSC, 1756-HSCK	252	1756-PLS	263

ControlLogix I/O Module Accessories

Chassis and Power Supply

1756 ControlLogix I/O modules must be mounted in a ControlLogix chassis and each chassis requires a power supply. For more information about the 1756 Chassis and Power Supply options available for your system, see page 269.

Standard I/O Module Wiring

1756 ControlLogix standard I/O modules require either a Removable Terminal Block (RTB) or a 1492 interface module (IFM) to connect all field-side wiring. RTBs and IFMs are not included with the I/O modules. They must be ordered separately. For more information about the RTBs and IFMs available for your system, see page 269 and page 271.

Safety I/O Module Wiring

1756 ControlLogix safety I/O modules require either a specific Removable Terminal Block (RTB) or 1492 interface module (IFM) to connect all field-side wiring.

- 1756-IB16S (1756 ControlLogix 16-point Sinking Safety Input Module) has been agency certified using only the ControlLogix RTBs (1756-TBCHS, 1756-TBS6HS).
- 1756-OBV8S (ControlLogix 8-point Safety Bipolar/Sourcing Output Module) has been agency certified using only the ControlLogix RTBs (1756-TBNHS, 1756-TBSHS).
- For information about the IFM module wiring systems that have been tested for use with 1756 Safety I/O modules, see Knowledgebase Technote, *1492 IFM Modules, Cables and Wiring Diagrams for 1756-IB16S, 1756-OBV8S Safety I/O Modules*.

RTBs and IFMs are not included with the I/O modules. They must be ordered separately. For more information about the RTBs and IFMs available for your system, see page 269 and page 271.

Any application that requires agency certification of the ControlLogix system by using other wiring termination methods may require application-specific approval by the certifying agency.

Notes:

1756-IA8D, 1756-IA8DK

ControlLogix 120V AC diagnostic input module

Simplified Schematic

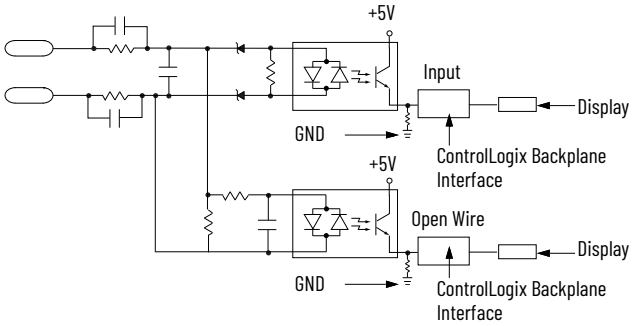

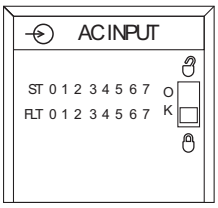

1756-IA8D

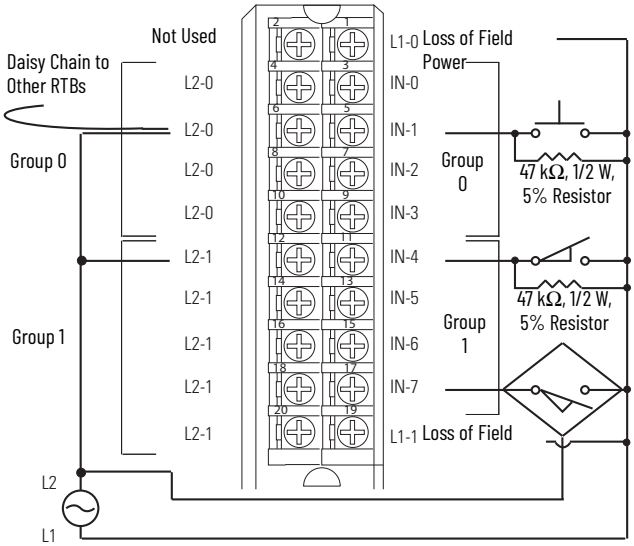

Diagnostic Specifications

Attribute	1756-IA8D, 1756-IA8DK
Open wire	Off-state leakage current 1.5 mA min
Loss of power	Transition range 46...85V AC
Time stamp of diagnostics	±1 ms

Technical Specifications

Attribute	1756-IA8D, 1756-IA8DK
Inputs	Eight diagnostic (4 points/group)
Operating voltage range[1]	79...132V AC, 47...63 Hz
Input delay time (screw to backplane) Off to On On to Off	 Hardware delay: 10 ms max + filter time User-selectable filter time: 1 ms or 2 ms Hardware delay: 8 ms max + filter time User-selectable filter time: 9 ms or 18 ms
Current draw @ 5.1V	100 mA
Current draw @ 24V	3 mA
Total backplane power	0.58 W
Power dissipation, max	4.5 W @ 60 °C (140 °F)
Thermal dissipation	15.35 BTU/hr
Off-state voltage, max	20V
Off-state current, max	2.5 mA
On-state current, min	5 mA @ 74V AC
On-state current, max	16 mA @ 132V AC
Inrush current, max	250 mA
Input impedance, max	8.25 kΩ @ 132V AC, 60 Hz
Cyclic update time	200 µs...750 ms
Change of state	Software configurable
Time stamp of inputs	±200 µs
Isolation voltage	125V (continuous), basic insulation type, inputs to backplane, and input group-to-group No isolation between individual group inputs
Module keying	Electronic, software configurable
Removable terminal block housing	1756-TBNH 1756-TBSH
RTB keying	User-defined mechanical
Slot width	1
Wire category	1[2] - on signal ports
Enclosure type	None (open-style)
North American temperature code	T4A

(1) UL certification for 120V 50/60 Hz nominal. Rockwell Automation specified to 74...132V, 47...63 Hz.
(2) Use this conductor category information for planning conductor routing as described in the system-level installation manual. See the Industrial Automation Wiring and Grounding Guidelines, publication 1770-4.1.

Environmental Specifications

Attribute	1756-IA8D, 1756-IA8DK
Temperature, operating IEC 60068-2-1 (Test Ae, Operating Cold), IEC 60068-2-2 (Test Be, Operating Dry Heat), IEC 60068-2-14 (Test Nb, Operating Thermal Shock)	0...60 °C (32...140 °F)
Temperature, nonoperating IEC 60068-2-1 (Test Ab, Unpackaged Nonoperating Cold), IEC 60068-2-2 (Test Bb, Unpackaged Nonoperating Dry Heat), IEC 60068-2-14 (Test Na, Unpackaged Nonoperating Thermal Shock)	-40...+85 °C (-40...+185 °F)
Relative humidity IEC 60068-2-30 (Test dB, Unpackaged Damp Heat)	5...95% noncondensing
Vibration IEC 60068-2-6 (Test Fc, Operating)	2 g @ 10...500 Hz
Shock, operating IEC 60068-2-27 (Test Ea, Unpackaged Shock)	30 g
Shock, nonoperating IEC 60068-2-27 (Test Ea, Unpackaged Shock)	50 g
Emissions	IEC 61000-6-4
ESD immunity IEC 61000-4-2	6 kV contact discharges 8 kV air discharges
Radiated RF immunity IEC 61000-4-3	10V/m with 1 kHz sine wave 80% AM from 80...2000 MHz 10V/m with 200 Hz 50% Pulse 100% AM @ 900 MHz 10V/m with 200 Hz 50% Pulse 100% AM @ 1890 MHz 3V/m with 1 kHz sine wave 80% AM from 2000...2700 MHz
EFT/B immunity IEC 61000-4-4	±4 kV at 5 kHz on signal ports
Surge transient immunity IEC 61000-4-5	±1 kV line-line (DM) and ±2 kV line-earth (CM) on signal ports
Conducted RF immunity IEC 61000-4-6	10V rms with 1 kHz sine wave 80% AM from 150 kHz...80 MHz

Certifications

Certification(1)	1756-IA8D, 1756-IA8DK
cULus	UL Listed Industrial Control Equipment, certified for US and Canada. See UL File E65584. UL Listed for Class I, Division 2 Group A,B,C,D Hazardous Locations, certified for U.S. and Canada. See UL File E194810.
CE	European Union 2014/30/EU EMC Directive, compliant with: • EN 61326-1; Meas./Control/Lab., Industrial Requirements • EN 61000-6-2; Industrial Immunity • EN 61000-6-4; Industrial Emissions • EN 61131-2; Programmable Controllers (Clause 8, Zone A & B) European Union 2014/35/EU LVD, compliant with EN 61131-2; Programmable Controllers (Clause 11)
RCM	Australian Radiocommunications Act, compliant with EN 61000-6-4; Industrial Emissions
FM	FM Approved Equipment for use in Class I Division 2 Group A,B,C,D Hazardous Locations
KC	Korean Registration of Broadcasting and Communications Equipment, compliant with Article 58-2 of Radio Waves Act, Clause 3
UKCA	In conformity with the following UK Statutory Instruments and their amendments: • 2016 No. 1091, Electromagnetic Compatibility Regulations • 2016 No. 1101, Electrical Equipment (Safety) Regulations • 2016 No. 1107, Equipment and Protective Systems Intended for Use in Potentially Explosive Atmospheres Regulations • 2012 No. 3032, Restriction of the Use of Certain Hazardous Substances in Electrical and Electronic Equipment
Morocco	In conformity with the following regulations: • Arrêté ministériel n° 6404-15 du 1 er muharram 1437 (15 octobre 2015) Équipements électriques destinés à être utilisés sous certaines limites de tension • Arrêté ministériel n° 6404-15 du 29 ramadan 1436 (16 juillet 2015) Compatibilité électromagnétique des équipements

(1) When product is marked. See the Product Certification link at rok.auto/certifications for Declarations of Conformity, Certificates, and other certification details.

1756-IA16, 1756-IA16K

ControlLogix 120V AC input module

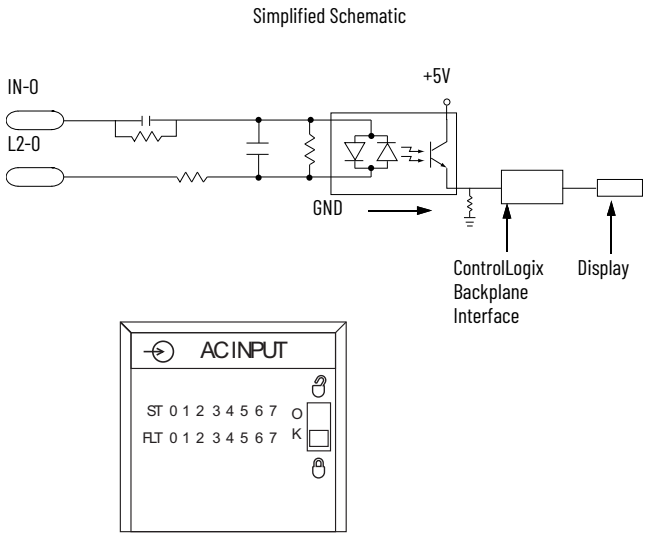

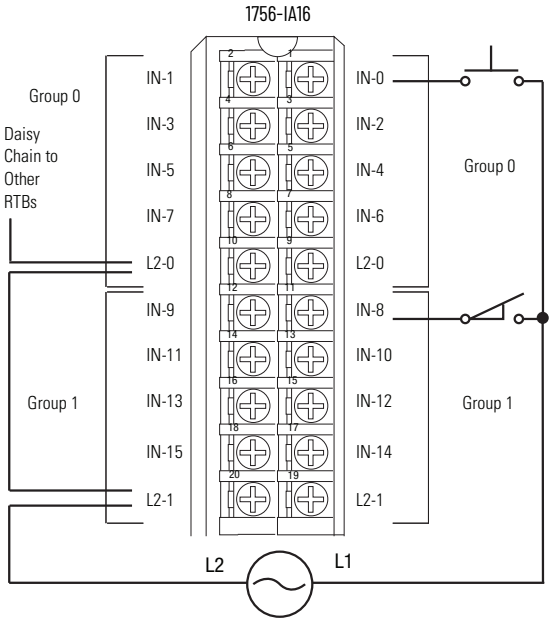

Technical Specifications

Attribute	1756-IA16, 1756-IA16K
Inputs	16 (8 points/group)
Voltage category	120V AC 50/60 Hz
Operating voltage range[1]	74...132V AC, 47...63 Hz
Input delay time (screw to backplane) Off to On On to Off	 Hardware delay: 10 ms max + filter time User-selectable filter time: 1 ms or 2 ms Hardware delay: 8 ms max + filter time User-selectable filter time: 9 ms or 18 ms
Current draw @ 5.1V	100 mA
Current draw @ 24V	2 mA
Total backplane power	0.58 W
Power dissipation, max	5.8 W @ 60 °C (140 °F)
Thermal dissipation	18.41 BTU/hr
Off-state voltage, max	20V
Off-state current, max	2.5 mA
On-state current, min	5 mA @ 74V AC
On-state current, max	13 mA @ 132V AC
Inrush current, max	250 mA peak (decaying to <37% in 22 ms, without activation)
Input impedance, max	10.15 kΩ @ 132V AC, 60 Hz
Cyclic update time	200 µs...750 ms
Change of state	Software configurable
Time stamp of inputs	±200 µs
Isolation voltage	125V (continuous), basic insulation type, inputs-to-backplane, and input group-to-group No isolation between individual group inputs
Module keying	Electronic, software configurable
Removable terminal block housing	1756-TBNH 1756-TBSH
RTB keying	User-defined mechanical
Slot width	1
Wire category	1[2]
Enclosure type	None (open-style)
North American temperature code	T4

(1) UL certification for 120V 50/60 Hz nominal. Rockwell Automation specified to 74...132V, 47...63 Hz.
(2) Use this conductor category information for planning conductor routing as described in the system-level installation manual. See the Industrial Automation Wiring and Grounding Guidelines, publication 1770-4.1.

Environmental Specifications

Attribute	1756-IA16, 1756-IA16K
Temperature, operating IEC 60068-2-1 (Test Ae, Operating Cold), IEC 60068-2-2 (Test Be, Operating Dry Heat), IEC 60068-2-14 (Test Nb, Operating Thermal Shock)	0...60 °C (32...140 °F)
Temperature, nonoperating IEC 60068-2-1 (Test Ab, Unpackaged Nonoperating Cold), IEC 60068-2-2 (Test Bb, Unpackaged Nonoperating Dry Heat), IEC 60068-2-14 (Test Na, Unpackaged Nonoperating Thermal Shock)	-40...+85 °C (-40...+185 °F)
Relative humidity IEC 60068-2-30 (Test dB, Unpackaged Damp Heat)	5...95% noncondensing
Vibration IEC 60068-2-6 (Test Fc, Operating)	2 g @ 10...500 Hz
Shock, operating IEC 60068-2-27 (Test Ea, Unpackaged Shock)	30 g
Shock, nonoperating IEC 60068-2-27 (Test Ea, Unpackaged Shock)	50 g
Emissions	IEC 61000-6-4
ESD immunity IEC 61000-4-2	6 kV contact discharges 8 kV air discharges
Radiated RF immunity IEC 61000-4-3	10V/m with 1 kHz sine wave 80% AM from 80...2000 MHz 10V/m with 200 Hz 50% Pulse 100% AM @ 900 MHz 10V/m with 200 Hz 50% Pulse 100% AM @ 1890 MHz 3V/m with 1 kHz sine wave 80% AM from 2000...2700 MHz
EFT/B immunity IEC 61000-4-4	±4 kV at 5 kHz on signal ports
Surge transient immunity IEC 61000-4-5	±1 kV line-line (DM) and ±2 kV line-earth (CM) on signal ports
Conducted RF immunity IEC 61000-4-6	10V rms with 1 kHz sine wave 80% AM from 150 kHz...80 MHz

Certifications

Certification(1)	1756-IA16, 1756-IA16K
cULus	UL Listed Industrial Control Equipment, certified for US and Canada. See UL File E65584. UL Listed for Class I, Division 2 Group A,B,C,D Hazardous Locations, certified for U.S. and Canada. See UL File E194810.
CE	European Union 2014/30/EU EMC Directive, compliant with: • EN 61326-1; Meas./Control/Lab., Industrial Requirements • EN 61000-6-2; Industrial Immunity • EN 61000-6-4; Industrial Emissions • EN 61131-2; Programmable Controllers (Clause 8, Zone A & B) European Union 2014/35/EU LVD, compliant with: EN 61131-2; Programmable Controllers (Clause 11)
RCM	Australian Radiocommunications Act, compliant with EN 61000-6-4; Industrial Emissions
FM	FM Approved Equipment for use in Class I Division 2 Group A,B,C,D Hazardous Locations
KC	Korean Registration of Broadcasting and Communications Equipment, compliant with Article 58-2 of Radio Waves Act, Clause 3
UKCA	In conformity with the following UK Statutory Instruments and their amendments: • 2016 No. 1091, Electromagnetic Compatibility Regulations • 2016 No. 1101, Electrical Equipment (Safety) Regulations • 2016 No. 1107, Equipment and Protective Systems Intended for Use in Potentially Explosive Atmospheres Regulations • 2012 No. 3032, Restriction of the Use of Certain Hazardous Substances in Electrical and Electronic Equipment
Morocco	In conformity with the following regulations: • Arrêté ministériel n° 6404-15 du 1 er muharram 1437 (15 octobre 2015) Équipements électriques destinés à être utilisés sous certaines limites de tension • Arrêté ministériel n° 6404-15 du 29 ramadan 1436 (16 juillet 2015) Compatibilité électromagnétique des équipements

(1) When product is marked. See the Product Certification link at rok.auto/certifications for Declarations of Conformity, Certificates, and other certification details.

1756-IA16I, 1756-IA16IK

ControlLogix 120V AC isolated input module

Simplified Schematic

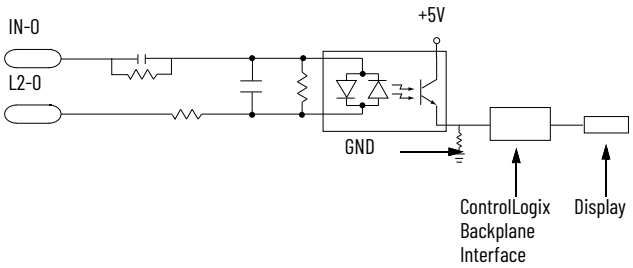

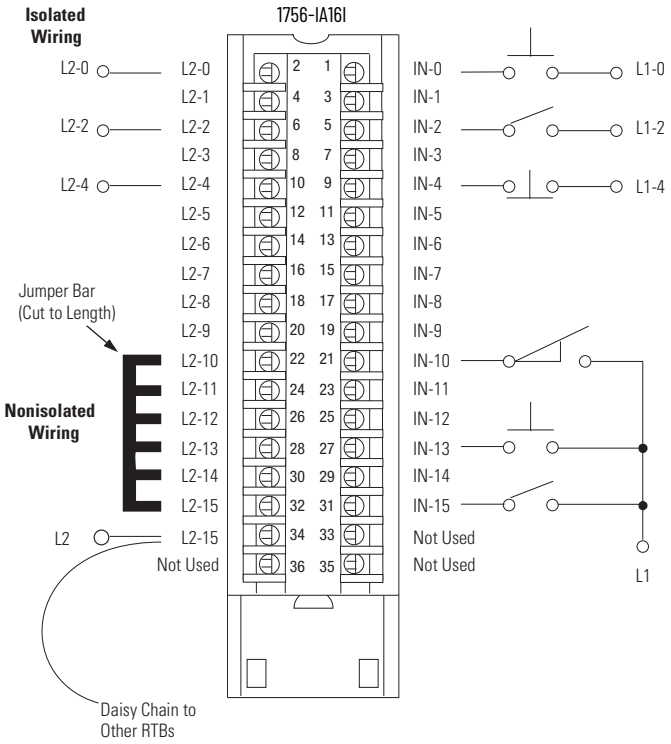

Additional jumper bars are available as catalog number 1756-JMPR.

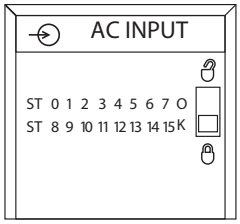

Technical Specifications

Attribute	1756-IA16I, 1756-IA16IK
Inputs	16 individually isolated
Voltage category	120V AC 50/60 Hz
Operating voltage range[1]	79...132V AC, 47...63 Hz
Input voltage, nom	120V AC 50/60 Hz
Input delay time (screw to backplane) Off to On On to Off	 Hardware delay: 10 ms max + filter time User-selectable filter time: 1 ms or 2 ms Hardware delay: 8 ms max + filter time User-selectable filter time: 9 ms or 18 ms
Current draw @ 5.1V	125 mA
Current draw @ 24V	3 mA
Total backplane power	0.71 W
Power dissipation, max	4.9 W @ 60 °C (140 °F)
Thermal dissipation	16.71 BTU/hr
Off-state voltage, max	20V
Off-state current, max	2.5 mA
On-state current, min	5 mA @ 79V AC, 47...63 Hz
On-state current, max	15 mA @ 132V AC, 47...63 Hz
Inrush current, max	250 mA
Input impedance, max	8.8 kΩ @ 132V AC, 60 Hz
Cyclic update time	200 µs...750 ms
Change of state	Software configurable
Time stamp of inputs	±200 µs
Isolation voltage	125V (continuous), basic insulation type, inputs-to-backplane, and input-to-input
Module keying	Electronic, software configurable
Removable terminal block housing	1756-TBCH 1756-TBS6H
RTB keying	User-defined mechanical
Slot width	1
Wire category[2]	1 - on signal ports
Enclosure type	None (open-style)
North American temperature code	T4A

(1) UL certification for 120V 50/60 Hz nominal. Rockwell Automation specified to 74...132V, 47...63 Hz.
(2) Use this conductor category information for planning conductor routing as described in the system-level installation manual. See the Industrial Automation Wiring and Grounding Guidelines, publication 1770-4.1.

Environmental Specifications

Attribute	1756-IA16I, 1756-IA16IK
Temperature, operating IEC 60068-2-1 (Test Ae, Operating Cold), IEC 60068-2-2 (Test Be, Operating Dry Heat), IEC 60068-2-14 (Test Nb, Operating Thermal Shock)	0...60 °C (32...140 °F)
Temperature, nonoperating IEC 60068-2-1 (Test Ab, Unpackaged Nonoperating Cold), IEC 60068-2-2 (Test Bb, Unpackaged Nonoperating Dry Heat), IEC 60068-2-14 (Test Na, Unpackaged Nonoperating Thermal Shock)	-40...+85 °C (-40...+185 °F)
Relative humidity IEC 60068-2-30 (Test dB, Unpackaged Damp Heat)	5...95% noncondensing
Vibration IEC 60068-2-6 (Test Fc, Operating)	2 g @ 10...500 Hz
Shock, operating IEC 60068-2-27 (Test Ea, Unpackaged Shock)	30 g
Shock, nonoperating IEC 60068-2-27 (Test Ea, Unpackaged Shock)	50 g
Emissions	IEC 61000-6-4
ESD immunity IEC 61000-4-2	6 kV contact discharges 8 kV air discharges
Radiated RF immunity IEC 61000-4-3	10V/m with 1 kHz sine wave 80% AM from 80...2000 MHz 10V/m with 200 Hz 50% Pulse 100% AM @ 900 MHz 10V/m with 200 Hz 50% Pulse 100% AM @ 1890 MHz 3V/m with 1 kHz sine wave 80% AM from 2000...2700 MHz
EFT/B immunity IEC 61000-4-4	±4 kV at 5 kHz on signal ports
Surge transient immunity IEC 61000-4-5	±1 kV line-line (DM) and ±2 kV line-earth (CM) on signal ports
Conducted RF immunity IEC 61000-4-6	10V rms with 1 kHz sine wave 80% AM from 150 kHz...80 MHz

Certifications

Certification(1)	1756-IA16I, 1756-IA16IK
cULus	UL Listed Industrial Control Equipment, certified for US and Canada. See UL File E65584. UL Listed for Class I, Division 2 Group A,B,C,D Hazardous Locations, certified for U.S. and Canada. See UL File E194810.
CE	European Union 2014/30/EU EMC Directive, compliant with: • EN 61131-2; Programmable Controllers (Clause 8, Zone A & B) • EN 61326-1; Meas./Control/Lab., Industrial Requirements • EN 61000-6-2; Industrial Immunity • EN 61000-6-4; Industrial Emissions European Union 2014/35/EU LVD Directive, compliant with EN 61131-2; Programmable Controllers (Clause 11)
RCM	Australian Radiocommunications Act, compliant with EN 61000-6-4; Industrial Emissions
FM	FM Approved Equipment for use in Class I Division 2 Group A,B,C,D Hazardous Locations
KC	Korean Registration of Broadcasting and Communications Equipment, compliant with Article 58-2 of Radio Waves Act, Clause 3
UKCA	In conformity with the following UK Statutory Instruments and their amendments: • 2016 No. 1091, Electromagnetic Compatibility Regulations • 2016 No. 1101, Electrical Equipment (Safety) Regulations • 2016 No. 1107, Equipment and Protective Systems Intended for Use in Potentially Explosive Atmospheres Regulations • 2012 No. 3032, Restriction of the Use of Certain Hazardous Substances in Electrical and Electronic Equipment
Morocco	In conformity with the following regulations: • Arrêté ministériel n° 6404-15 du 1 er muharram 1437 (15 octobre 2015) Équipements électriques destinés à être utilisés sous certaines limites de tension • Arrêté ministériel n° 6404-15 du 29 ramadan 1436 (16 juillet 2015) Compatibilité électromagnétique des équipements

(1) When product is marked. See the Product Certification link at rok.auto/certifications for Declarations of Conformity, Certificates, and other certification details.

1756-IA32, 1756-IA32K

ControlLogix AC (74...132V) input module

Simplified Schematic

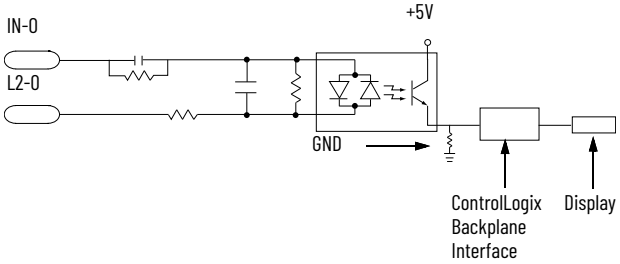

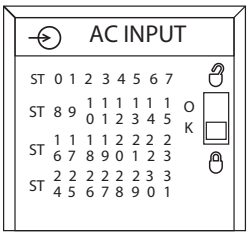

1756-IA32

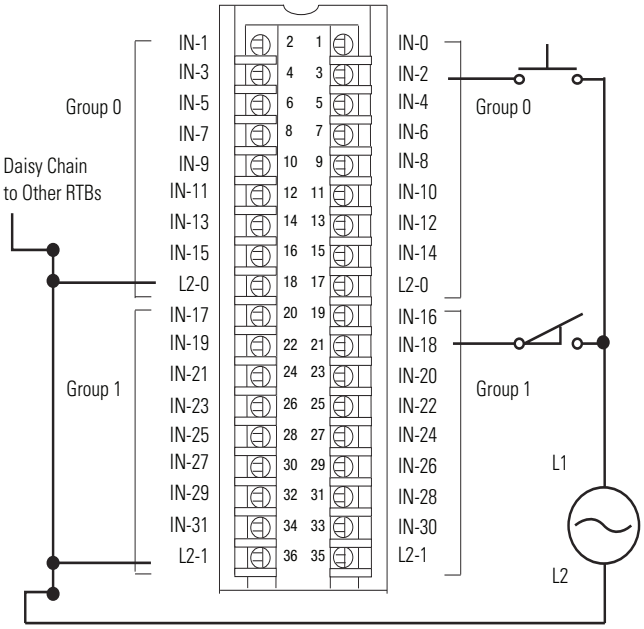

Technical Specifications

Attribute	1756-IA32, 1756-IA32K
Inputs	32 (16 points/group)
Voltage category	120V AC 50/60 Hz
Operating voltage range	74...132V AC, 47...63 Hz
Input voltage, nom	120V AC 50/60 Hz
Input delay time (screw to backplane) Off to On On to Off	 Hardware delay: 1.5 ms nom/10 ms max + filter time User-selectable filter time: 1 ms or 2 ms Hardware delay: 1 ms nom/8 ms max + filter time User-selectable filter time: 9 ms or 18 ms
Current draw @ 5.1V	165 mA
Current draw @ 24V	2 mA
Total backplane power	0.9 W
Power dissipation, max	6.1 W @ 60 °C (140 °F)
Thermal dissipation	20.8 BTU/hr
Off-state voltage, max	20V
Off-state current, max	2.5 mA
On-state current, min	5 mA @ 74V AC
On-state current, max	15 mA @ 132V AC
Inrush current, max	390 mA
Input impedance, max	14.0 kΩ @ 132V AC, 60 Hz
Cyclic update time	200 µs...750 ms
Change of stat	Software configurable
Time stamp of inputs	±200 µs
Isolation voltage	250V (continuous), basic insulation type, inputs-to-backplane 125V (continuous), basic insulation type, input group-to-group No isolation between individual group inputs
Module keying	Electronic, software configurable
Removable terminal block housing	1756-TBCH 1756-TBS6H
RTB keying	User-defined mechanical
Slot width	1
Wire category(1)	1 - on signal ports
Enclosure type	None (open-style)
North American temperature code	T4

(1) Use this Conductor Category information for planning conductor routing. See Industrial Automation Wiring and Grounding Guidelines, publication 1770-4.1.

Environmental Specifications

Attribute	1756-IA32, 1756-IA32K
Temperature, operating IEC 60068-2-1 (Test Ae, Operating Cold), IEC 60068-2-2 (Test Be, Operating Dry Heat), IEC 60068-2-14 (Test Nb, Operating Thermal Shock)	0...60 °C (32...140 °F)
Temperature, nonoperating IEC 60068-2-1 (Test Ab, Unpackaged Nonoperating Cold), IEC 60068-2-2 (Test Bb, Unpackaged Nonoperating Dry Heat), IEC 60068-2-14 (Test Na, Unpackaged Nonoperating Thermal Shock)	-40...+85 °C (-40...+185 °F)
Relative humidity IEC 60068-2-30 (Test dB, Unpackaged Damp Heat)	5...95% noncondensing
Vibration IEC 60068-2-6 (Test Fc, Operating)	2 g @ 10...500 Hz
Shock, operating IEC 60068-2-27 (Test Ea, Unpackaged Shock)	30 g
Shock, nonoperating IEC 60068-2-27 (Test Ea, Unpackaged Shock)	50 g
Emissions	IEC 61000-6-4
ESD immunity IEC 61000-4-2	6 kV contact discharges 8 kV air discharges
Radiated RF immunity IEC 61000-4-3	10V/m with 1 kHz sine wave 80% AM from 80...2000 MHz 10V/m with 200 Hz 50% Pulse 100% AM @ 900 MHz 10V/m with 200 Hz 50% Pulse 100% AM @ 1890 MHz 3V/m with 1 kHz sine wave 80% AM from 2000...2700 MHz
EFT/B immunity IEC 61000-4-4	±4 kV at 5 kHz on signal ports
Surge transient immunity IEC 61000-4-5	±1 kV line-line (DM) and ±2 kV line-earth (CM) on signal ports
Conducted RF immunity IEC 61000-4-6	10V rms with 1 kHz sine wave 80% AM from 150 kHz...80 MHz

Certifications

Certification(1)	1756-IA32, 1756-IA32K
cULus	UL Listed Industrial Control Equipment, certified for US and Canada. See UL File E65584. UL Listed for Class I, Division 2 Group A,B,C,D Hazardous Locations, certified for U.S. and Canada. See UL File E194810.
CE	European Union 2014/30/EU EMC Directive, compliant with: • EN 61326-1; Meas./Control/Lab., Industrial Requirements • EN 61000-6-2; Industrial Immunity • EN 61000-6-4; Industrial Emissions • EN 61131-2; Programmable Controllers (Clause 8, Zone A & B) European Union 2014/35/EU LVD, compliant with EN 61131-2; Programmable Controllers (Clause 11)
RCM	Australian Radiocommunications Act, compliant with EN 61000-6-4; Industrial Emissions
KC	Korean Registration of Broadcasting and Communications Equipment, compliant with Article 58-2 of Radio Waves Act, Clause 3
UKCA	In conformity with the following UK Statutory Instruments and their amendments: • 2016 No. 1091, Electromagnetic Compatibility Regulations • 2016 No. 1101, Electrical Equipment (Safety) Regulations • 2016 No. 1107, Equipment and Protective Systems Intended for Use in Potentially Explosive Atmospheres Regulations • 2012 No. 3032, Restriction of the Use of Certain Hazardous Substances in Electrical and Electronic Equipment
Morocco	In conformity with the following regulations: • Arrêté ministériel n° 6404-15 du 1 er muharram 1437 (15 octobre 2015) Équipements électriques destinés à être utilisés sous certaines limites de tension • Arrêté ministériel n° 6404-15 du 29 ramadan 1436 (16 juillet 2015) Compatibilité électromagnétique des équipements

(1) When product is marked. See the Product Certification link at rok.auto/certifications for Declarations of Conformity, Certificates, and other certification details.

1756-IM16I, 1756-IM16IK

ControlLogix 240V AC input module

Simplified Schematic

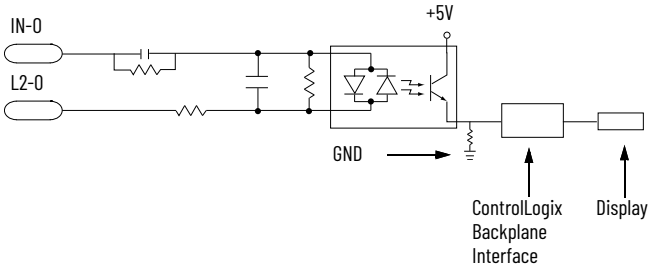

1756-IM16I

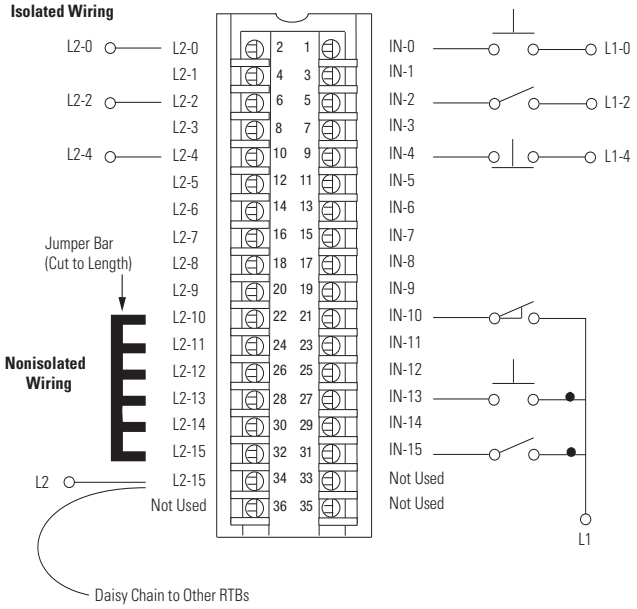

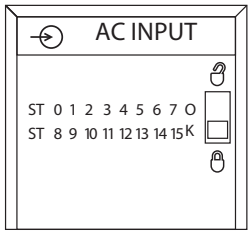

Technical Specifications

Attribute	1756-IM16I, 1756-IM16IK
Inputs	16 individually isolated
Voltage category	240V AC 50/60 Hz
Operating voltage range	159...265V AC, 47...63 Hz[1]
Input voltage, nom	240V AC 50/60 Hz
Input delay time (screw to backplane) Off to On Onto Off	 Hardware delay: 10 ms max + filter time User-selectable filter time: 1 ms or 2 ms Hardware delay: 8 ms max + filter time User-selectable filter time: 9 ms or 18 ms
Current draw @ 5.1V	100 mA
Current draw @ 24V	3 mA
Total backplane power	0.58 W
Power dissipation, max	5.8 W @ 60 °C (140 °F)
Thermal dissipation	19.78 BTU/hr
Off-state voltage, max	40V
Off-state current, max	2.5 mA
On-state current, min	5 mA @ 159V AC, 60 Hz
On-state current, max	13 mA @ 265V AC, 60 Hz
On-state voltage	159...265V AC, 47...63Hz @ 30 °C (86 °F) all channels ON 159...265V AC, 47...63Hz @ 40 °C (104 °F) 8 points ON 159...253V AC, 47...63Hz @ 45 °C (113 °F) all channels ON 159...242V AC, 47...63Hz @ 60 °C (140 °F) all channels ON
Inrush current, max	250 mA
Input impedance, max	20.38 kΩ @ 265V AC, 60 Hz
Cyclic update time	200 µs...750 ms
Change of state	Software configurable
Time stamp of inputs	±200 µs
Isolation voltage	250V (continuous), basic insulation type, inputs-to-backplane, and input-to-input
Module keying	Electronic, software configurable
Removable terminal block housing	1756-TBCH 1756-TBS6H
RTB keying	User-defined mechanical
Slot width	1
Wire category[2]	1 - on signal ports 1 - on power ports
Enclosure type	None (open-style)
North American temperature code	T4

(1) UL certification for 240V 50/60 Hz nominal. Rockwell Automation specified to the following:
159...265V AC, 47...63Hz @ 30 °C (86 °F) all channels on
159...265V AC, 47...63Hz @ 40 °C (104 °F) 8 points on
159...253V AC, 47...63Hz @ 45 °C (113 °F) all channels on
159...242V AC, 47...63Hz @ 60 °C (140 °F) all channels on

(2) Use this conductor category information for planning conductor routing as described in the system-level installation manual. See the Industrial Automation Wiring and Grounding Guidelines, publication 1770-4.1.

Environmental Specifications

Attribute	1756-IM16I, 1756-IM16IK
Temperature, operating IEC 60068-2-1 (Test Ae, Operating Cold), IEC 60068-2-2 (Test Be, Operating Dry Heat), IEC 60068-2-14 (Test Nb, Operating Thermal Shock)	0...60 °C (32...140 °F)
Temperature, nonoperating IEC 60068-2-1 (Test Ab, Unpackaged Nonoperating Cold), IEC 60068-2-2 (Test Bb, Unpackaged Nonoperating Dry Heat), IEC 60068-2-14 (Test Na, Unpackaged Nonoperating Thermal Shock)	-40...+85 °C (-40...+185 °F)
Relative humidity IEC 60068-2-30 (Test dB, Unpackaged Damp Heat)	5...95% noncondensing
Vibration IEC 60068-2-6 (Test Fc, Operating)	2 g @ 10...500 Hz
Shock, operating IEC 60068-2-27 (Test Ea, Unpackaged Shock)	30 g
Shock, nonoperating IEC 60068-2-27 (Test Ea, Unpackaged Shock)	50 g
Emissions	IEC 61000-6-4
ESD immunity IEC 61000-4-2	6 kV contact discharges 8 kV air discharges
Radiated RF immunity IEC 61000-4-3	10V/m with 1 kHz sine wave 80% AM 30...1000 MHz 10V/m with 200 Hz 50% Pulse 100% AM at 900 MHz
EFT/B immunity IEC 61000-4-4	±4 kV at 5 kHz on signal ports
Surge transient immunity IEC 61000-4-5	±1 kV line-line (DM) and ±2 kV line-earth (CM) on signal ports
Conducted RF immunity IEC 61000-4-6	10V rms with 1 kHz sine wave 80% AM from 150 kHz...80 MHz

Certifications

Certification(1)	1756-IM16I, 1756-IM16IK
cULus	UL Listed Industrial Control Equipment, certified for US and Canada. See UL File E65584. UL Listed for Class I, Division 2 Group A,B,C,D Hazardous Locations, certified for U.S. and Canada. See UL File E194810.
CE	European Union 89/336/EEC EMC Directive, compliant with: • EN 61131-2; Programmable Controllers (Clause 8, Zone A & B) • EN 61326-1; Meas./Control/Lab., Industrial Requirements • EN 61000-6-2; Industrial Immunity • EN 61000-6-4; Industrial Emissions European Union 2014/35/EU LVD Directive, compliant with EN 61131-2; Programmable Controllers (Clause 11)
RCM	Australian Radiocommunications Act, compliant with EN 61000-6-4; Industrial Emissions
FM	FM Approved Equipment for use in Class I Division 2 Group A,B,C,D Hazardous Locations
KC	Korean Registration of Broadcasting and Communications Equipment, compliant with Article 58-2 of Radio Waves Act, Clause 3
UKCA	In conformity with the following UK Statutory Instruments and their amendments: • 2016 No. 1091, Electromagnetic Compatibility Regulations • 2016 No. 1101, Electrical Equipment (Safety) Regulations • 2016 No. 1107, Equipment and Protective Systems Intended for Use in Potentially Explosive Atmospheres Regulations • 2012 No. 3032, Restriction of the Use of Certain Hazardous Substances in Electrical and Electronic Equipment
Morocco	In conformity with the following regulations: • Arrêté ministériel n° 6404-15 du 1 er muharram 1437 (15 octobre 2015) Équipements électriques destinés à être utilisés sous certaines limites de tension • Arrêté ministériel n° 6404-15 du 29 ramadan 1436 (16 juillet 2015) Compatibilité électromagnétique des équipements

(1) When product is marked. See the Product Certification link at rok.auto/certifications for Declarations of Conformity, Certificates, and other certification details.

1756-IN16, 1756-IN16K

ControlLogix AC (10...30V) input module

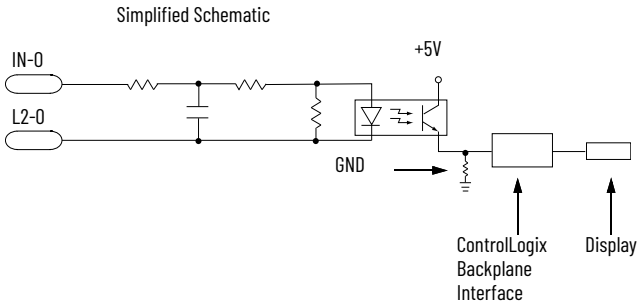

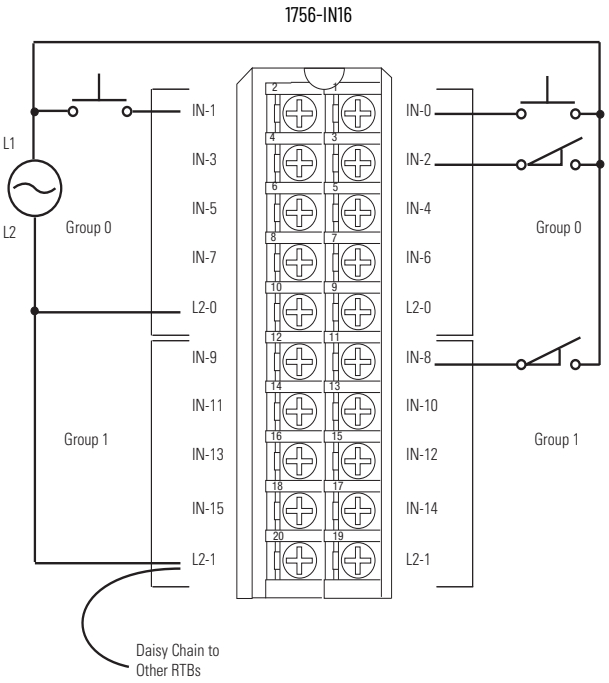

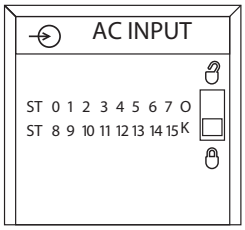

Technical Specifications

Attribute	1756-IN16, 1756-IN16K
Inputs	16 (8 points/group)
Voltage category	24V AC 50/60 Hz
Operating voltage range	10...30V AC, 47...63 Hz
Input voltage, nom	24V AC 50/60 Hz
Voltage and current ratings	Backplane: 5.1V DC, 135 mA 24V DC, 2 mA Inputs: 10...30V AC, 50/60Hz 25 mA max
Input delay time (screw to backplane) Off to On On to Off	 Hardware delay: 10 ms max + filter time User-selectable filter time: 0 ms, 1 ms, or 2 ms Hardware delay: 10 ms max + filter time User-selectable filter time: 9 ms or 18 ms
Current draw @ 5.1V	135 mA
Current draw @ 24V	2 mA
Total backplane power	0.56 W
Power dissipation, max	5.1 W @ 60 °C (140 °F)
Thermal dissipation	17.39 BTU/hr
Off-state voltage, max	5V
Off-state current, max	2.75 mA
On-state current, min	5 mA @ 10V AC, 60 Hz
On-state current, max	21 mA @ 30V AC, 60 Hz
Inrush current, max	250 mA
Input impedance, max	2.5 kΩ @ 30V AC, 60 Hz
Cyclic update time	200 µs...750 ms
Change of state	Software configurable
Time stamp of inputs	±200 µs
Isolation voltage	250V (continuous), basic insulation type, inputs-to-backplane, and input group-to-group No isolation between individual group inputs
Module keying	Electronic, software configurable
Removable terminal block housing	1756-TBNH 1756-TBSH
RTB keying	User-defined mechanical
Wire Size	1756-TBNH Single wire connection: 0.33...2.1 mm^2 (22...14 AWG) solid or stranded shielded copper wire rated at 105 °C (221 °F), or greater, 1.2 mm (3/64 in.) insulation max. Double wire connection: 0.33...1.3 mm^2 (22...16 AWG) solid or stranded copper wire rated at 105 °C (221 °F), or greater, 1.2 mm (3/64 in.) insulation max. 1756-TBSH Single wire connection: 0.33...2.1 mm^2 (22...14 AWG) solid or stranded shielded copper wire rated at 105 °C (221 °F), or greater, 1.2 mm (3/64 in.) insulation max.
Terminal block torque specs	1756-TBNH 1.36 N•m (12 lb·in)
Slot width	1
Wire category(1)	1 - on signal ports
Enclosure type	None (open-style)
Temperature code	T3

(1) Use this conductor category information for planning conductor routing as described in the system-level installation manual. See the Industrial Automation Wiring and Grounding Guidelines, publication 1770-4.1.

Environmental Specifications

Attribute	1756-IN16, 1756-IN16K
Temperature, operating IEC 60068-2-1 (Test Ae, Operating Cold), IEC 60068-2-2 (Test Be, Operating Dry Heat), IEC 60068-2-14 (Test Nb, Operating Thermal Shock)	0 °C < Ta < 60 °C (32 °F < Ta < 140 °F)
Temperature, nonoperating IEC 60068-2-1 (Test Ab, Unpackaged Nonoperating Cold), IEC 60068-2-2 (Test Bb, Unpackaged Nonoperating Dry Heat), IEC 60068-2-14 (Test Na, Unpackaged Nonoperating Thermal Shock)	-40...+85 °C (-40...+185 °F)
Relative humidity IEC 60068-2-30 (Test dB, Unpackaged Damp Heat)	5...95% noncondensing
Vibration IEC 60068-2-6 (Test Fc, Operating)	2 g @ 10...500 Hz
Shock, operating IEC 60068-2-27 (Test Ea, Unpackaged Shock)	30 g
Shock, nonoperating IEC 60068-2-27 (Test Ea, Unpackaged Shock)	30 g
Emissions	IEC 61000-6-4
ESD immunity IEC 61000-4-2	6 kV contact discharges 8 kV air discharges
Radiated RF immunity IEC 61000-4-3	10V/m with 1 kHz sine wave 80% AM from 80...2000 MHz 10V/m with 200 Hz 50% Pulse 100% AM @ 900 MHz 10V/m with 200 Hz 50% Pulse 100% AM @ 1890 MHz 3V/m with 1 kHz sine wave 80% AM from 2000...2700 MHz
EFT/B immunity IEC 61000-4-4	±4 kV at 5 kHz on signal ports
Conducted RF immunity IEC 61000-4-6	10V rms with 1 kHz sine wave 80% AM from 150 kHz...80 MHz

Certifications

Certification[1]	1756-IN16, 1756-IN16K
cULus	UL Listed Industrial Control Equipment, certified for US and Canada. See UL File E65584. UL Listed for Class I, Division 2 Group A,B,C,D Hazardous Locations, certified for U.S. and Canada. See UL File E194810.
CE	European Union 2014/30/EU EMC Directive, compliant with: • EN 61326-1; Meas./Control/Lab., Industrial Requirements • EN 61000-6-2; Industrial Immunity • EN 61000-6-4; Industrial Emissions • EN 61131-2; Programmable Controllers (Clause 8, Zone A & B) European Union 2014/35/EU LVD, compliant with EN 61131-2; Programmable Controllers (Clause 11)
RCM	Australian Radiocommunications Act, compliant with EN 61000-6-4; Industrial Emissions
Ex	European Union 2014/34/EU ATEX Directive, compliant with: • IEC 60079-0 Edition 7; General Requirements • EN 60079-7; Potentially Explosive Atmospheres, Protection "e" • II 3 G Ex ec IIC T3 Gc • UL22ATEX2820
IECEx	IECEx System, compliant with: • IEC 60079-0 Edition 7; General Requirements • IEC 60079-7; Potentially Explosive Atmospheres, Protection "e" • II 3 G Ex ec IIC T3 Gc • IECEx UL 22.0065
UKex	In conformity with the following UKex Statutory Instruments and their amendments: • Schedule 1 of the UKEX Regulation 2016 No. 1107 • Equipment protection by increased safety "e", reference certificate number UL22UKEX2602X • Zone 2 classification according to UKEX Regulation 2016 No. 1107
KC	Korean Registration of Broadcasting and Communications Equipment, compliant with Article 58-2 of Radio Waves Act, Clause 3
FM	FM Approved Equipment for use in Class I Division 2 Group A,B,C,D Hazardous Locations
UKCA	In conformity with the following UK Statutory Instruments and their amendments: • 2016 No. 1091, Electromagnetic Compatibility Regulations • 2016 No. 1101, Electrical Equipment (Safety) Regulations • 2016 No. 1107, Equipment and Protective Systems Intended for Use in Potentially Explosive Atmospheres Regulations • 2012 No. 3032, Restriction of the Use of Certain Hazardous Substances in Electrical and Electronic Equipment
Morocco	In conformity with the following regulations: • Arrêté ministériel n° 6404-15 du 1 er muharram 1437 (15 octobre 2015) Équipements électriques destinés à être utilisés sous certaines limites de tension • Arrêté ministériel n° 6404-15 du 29 ramadan 1436 (16 juillet 2015) Compatibilité électromagnétique des équipements
CCC	CCC 2020122309111998 CNCA-C23-01 强制性产品认证实施规则 防爆电气 CNCA-C23-01 CCC Implementation Rule Explosion-Proof Electrical Products

(1) When product is marked. See the Product Certification link at rok.auto/certifications for Declarations of Conformity, Certificates, and other certification details.

1756-OA8, 1756-OA8K

ControlLogix 120/240V AC output module

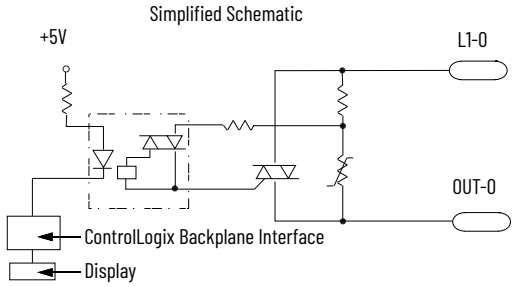

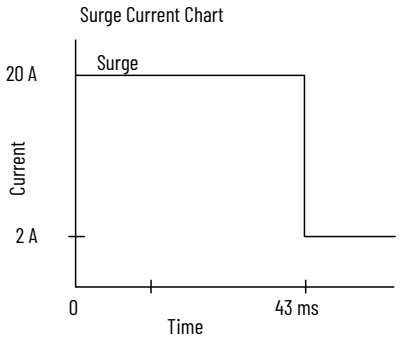

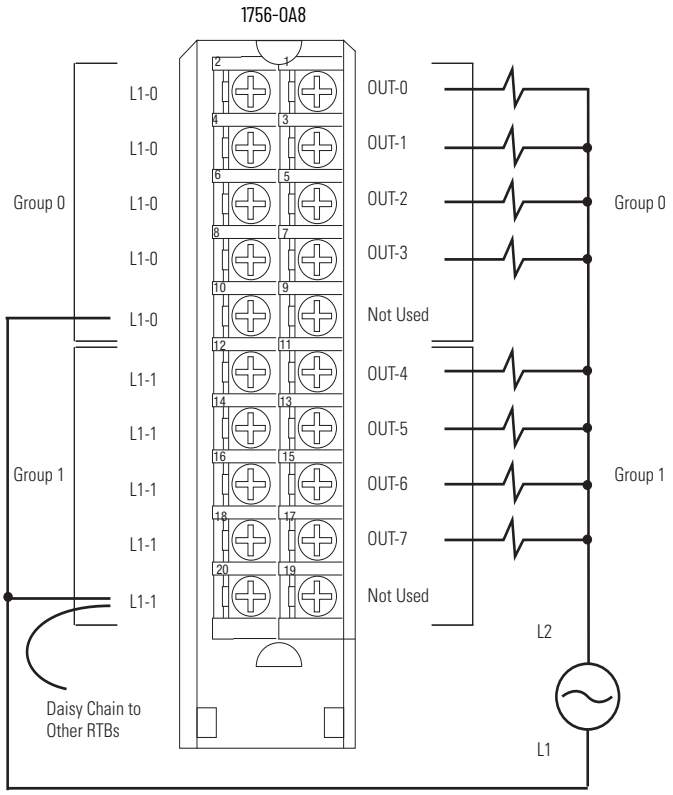

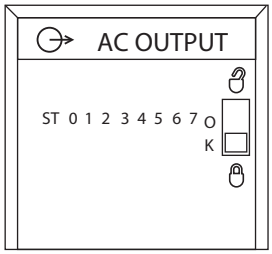

Technical Specifications

Attribute	1756-OA8, 1756-OA8K
Outputs	8 (4 points/group)
Pilot duty	2 A
Voltage category	120/240V AC 50/60 Hz
Operating voltage range(1)	74...265V AC 47...63 Hz
Output delay time Off to On On to Off	 9.3 ms @ 60 Hz 11 ms @ 50 Hz 9.3 ms @ 60 Hz 11 ms @ 50 Hz
Current draw @ 5.1V	200 mA
Current draw @ 24V	2 mA
Total backplane power	1.07 W
Power dissipation, max	5.1 W @ 60 °C (140 °F)
Thermal dissipation	17.39 BTU/hr
Off-state leakage current, max	3 mA per point
On-state voltage drop, max	1.5V peak @ 2 A 6V peak @ <50 mA
Current per point, max	2 A @ 60 °C (140 °F) linear derating
Current per module, max	5 A @ 30 °C (86 °F) linear derating 4 A @ 60 °C (140 °F) linear derating
Surge current per point	20 A for 43 ms per point, repeatable every 2 s @ 60 °C (140 °F)
Load current, min	10 mA per point
Commutating voltage	4V/µs for loads > 50 mA 0.2V/µs for loads < 50 mA(2)
Scheduled outputs	Synchronization within 16.7 s max, reference to the Coordinated System Time
States in Fault mode per point	Hold last state, On or Off (Off is default)
States in Program mode per point	Hold last state, On or Off (Off is default)
Isolation voltage	250V (continuous), basic insulation type, outputs-to-backplane, and output group-to-group No isolation between individual group outputs
Inhibit voltage, max	Zero crossing 60V peak
Module keying	Electronic, software configurable
Fusing	Not protected. A fused IFM is recommended to help protect outputs
Removable terminal block	1756-TBNH 1756-TBSH
RTB keying	User-defined mechanical
Slot width	1
Wire category	1(3)
Enclosure type	None (open style)
North American temperature code	T4A

(1) UL certification for 120/240V 50/60 Hz nominal. Rockwell Automation specified to 74...265, 47...63 Hz.
(2) The commutating dv/dt of the output voltage (OUTPUT to L2) should not exceed 0.2V/µs for loads under 50 mA. The commutating dv/dt rating of the module for loads 50...500 mA (OUTPUT to L2) is 4V/µs maximum. If the commutating dv/dt rating of the TRIAC is exceeded, the TRIAC could latch on. If the commutating dv/dt rating is exceeded in the 10...50 mA range, a resistor can be added across the output and L2. The purpose of this resistor is to increase the total output current to 50 mA (I=V/R). At 50 mA and above, the module has a higher commutating dv/dt rating. When adding a resistor for the output to L2, be sure it is rated for the power that it dissipates (P=(V**2)/R). If the commutating dv/dt rating is exceeded in the 50...500 mA range, the L1 AC waveform could be at fault. Be sure that the waveform is a good sinusoid, void of any anomalies such as distorted, or flattened sections.
(3) Use this conductor category information for planning conductor routing as described in the system-level installation manual. See the Industrial Automation Wiring and Grounding Guidelines, publication 1770-4.1.

Environmental Specifications

Attribute	1756-OA8, 1756-OA8K
Temperature, operating IEC 60068-2-1 (Test Ae, Operating Cold), IEC 60068-2-2 (Test Be, Operating Dry Heat), IEC 60068-2-14 (Test Nb, Operating Thermal Shock)	0...60 °C (32...140 °F)
Temperature, nonoperating IEC 60068-2-1 (Test Ab, Unpackaged Nonoperating Cold), IEC 60068-2-2 (Test Bb, Unpackaged Nonoperating Dry Heat), IEC 60068-2-14 (Test Na, Unpackaged Nonoperating Thermal Shock)	-40...+85 °C (-40...+185 °F)
Relative humidity IEC 60068-2-30 (Test dB, Unpackaged Damp Heat)	5...95% noncondensing
Vibration IEC 60068-2-6 (Test Fc, Operating)	2 g @ 10...500 Hz
Shock, operating IEC 60068-2-27 (Test Ea, Unpackaged Shock)	30 g
Shock, nonoperating IEC 60068-2-27 (Test Ea, Unpackaged Shock)	50 g
Emissions	IEC 61000-6-4
ESD immunity IEC 61000-4-2	6 kV contact discharges 8 kV air discharges
Radiated RF immunity IEC 61000-4-3	10V/m with 1 kHz sine wave 80% AM from 80...2000 MHz 10V/m with 200 Hz 50% Pulse 100% AM @ 900 MHz 10V/m with 200 Hz 50% Pulse 100% AM @ 1890 MHz 3V/m with 1 kHz sine wave 80% AM from 2000...2700 MHz
EFT/B immunity IEC 61000-4-4	±4 kV at 5 kHz on signal ports
Surge transient immunity IEC 61000-4-5	±1 kV line-line (DM) and ±2 kV line-earth (CM) on signal ports
Conducted RF immunity IEC 61000-4-6	10V rms with 1 kHz sine wave 80% AM from 150 kHz...80 MHz

Certifications

Certification(1)	1756-OA8, 1756-OA8K
cULus	UL Listed Industrial Control Equipment, certified for US and Canada. See UL File E65584. UL Listed for Class I, Division 2 Group A,B,C,D Hazardous Locations, certified for U.S. and Canada. See UL File E194810.
CE	European Union 2014/30/EU EMC Directive, compliant with: • EN 61326-1; Meas./Control/Lab., Industrial Requirements • EN 61000-6-2; Industrial Immunity • EN 61000-6-4; Industrial Emissions • EN 61131-2; Programmable Controllers (Clause 8, Zone A & B) European Union 2014/35/EU LVD, compliant with EN 61131-2; Programmable Controllers (Clause 11)
RCM	Australian Radiocommunications Act, compliant with EN 61000-6-4; Industrial Emissions
FM	FM Approved Equipment for use in Class I Division 2 Group A,B,C,D Hazardous Locations
KC	Korean Registration of Broadcasting and Communications Equipment, compliant with Article 58-2 of Radio Waves Act, Clause 3
UKCA	In conformity with the following UK Statutory Instruments and their amendments: • 2016 No. 1091, Electromagnetic Compatibility Regulations • 2016 No. 1101, Electrical Equipment (Safety) Regulations • 2016 No. 1107, Equipment and Protective Systems Intended for Use in Potentially Explosive Atmospheres Regulations • 2012 No. 3032, Restriction of the Use of Certain Hazardous Substances in Electrical and Electronic Equipment
Morocco	In conformity with the following regulations: • Arrêté ministériel n° 6404-15 du 1 er muharram 1437 (15 octobre 2015) Équipements électriques destinés à être utilisés sous certaines limites de tension • Arrêté ministériel n° 6404-15 du 29 ramadan 1436 (16 juillet 2015) Compatibilité électromagnétique des équipements

(1) When product is marked. See the Product Certification link at rok.auto/certifications for Declarations of Conformity, Certificates, and other certification details.

1756-OA8D

ControlLogix 120V AC diagnostic output module

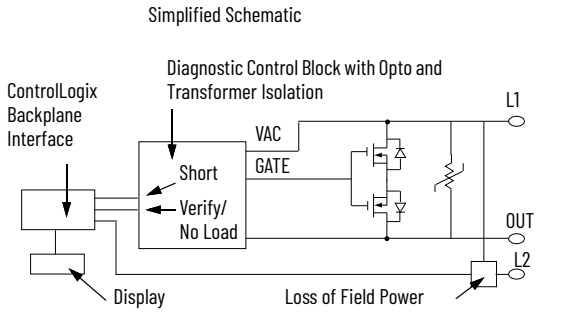

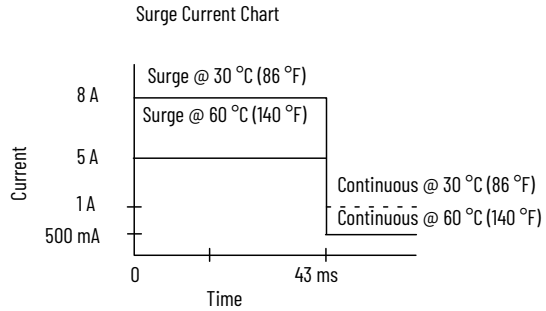

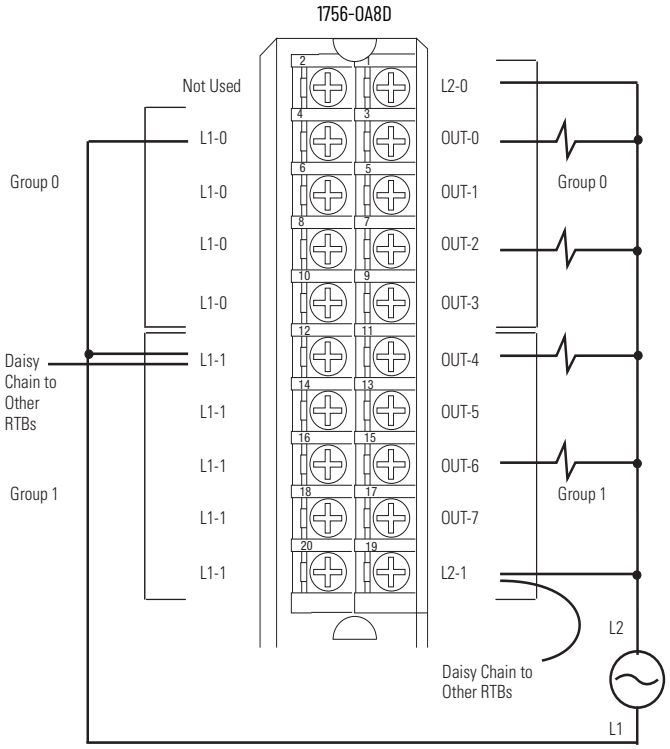

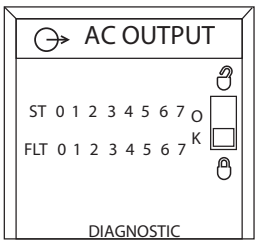

Diagnostic Specifications

Attribute	1756-OA8D
Short trip, min	12 A for 500 µs
No load	Off-state detection only
Output verification	On-state detection only
Pulse test	Configurable maximum width and max time delay from zero cross
Field power loss (zero cross)	Detects at 25V peak min (firmware phase locked loop)
Time stamp of diagnostics	±1 ms

Technical Specifications

Attribute	1756-OA8D
Outputs	8 diagnostic, electronic fusing (4 points/group)
Voltage category	120V AC 50/60 Hz
Operating voltage range[1]	74...132V AC 47...63 Hz
Output delay time Off to On On to Off	 9.3 ms @ 60 Hz 11 ms @ 50 Hz 9.3 ms @ 60 Hz 11 ms @ 50 Hz
Current draw @ 5.1V	175 mA
Current draw @ 24V	250 mA
Total backplane power	6.89 W
Power dissipation, max	5.3 W @ 60 °C (140 °F)
Thermal dissipation	18.0 BTU/hr
Off-state leakage current, max	3 mA per point
On-state voltage drop, max	2.5V peak @ 0.5 A 3V peak @ 1 A
Current per point, max	1 A @ 30 °C (86 °F) linear derating 0.5 A @ 60 °C (140 °F) linear derating
Current per module, max	8 A @ 30 °C (86 °F) linear derating 4 A @ 60 °C (140 °F) linear derating
Surge current per point	8 A for 43 ms per point, repeatable every 2 s @ 30 °C (86 °F) 5 A for 43 ms per point, repeatable every 1 s @ 60 °C (140 °F)
Load current, min	10 mA per point
Scheduled outputs	Synchronization within 16.7 s max, reference to the Coordinated System Time
States in Fault mode per point	Hold last state, On or Off (Off is default)
States in Program mode per point	Hold last state, On or Off (Off is default)
Isolation voltage	125V (continuous), basic insulation type, outputs-to-backplane, and output group-to-group No isolation between individual group outputs
Inhibit voltage, max	Zero crossing 25V peak
Module keying	Electronic, software configurable
Fusing	Electronically fused per point
Removable terminal block	1756-TBNH 1756-TBSH
RTB keying	User-defined mechanical
Slot width	1
Wire size	1756-TBNH Single wire connection: 0.33...2.1 mm^2 (22...14 AWG) solid or stranded shielded copper wire rated at 105 °C (221 °F), or greater, 1.2 mm (3/64 in.) insulation max. Double wire connection: 0.33...1.3 mm^2 (22...16 AWG) solid or stranded copper wire rated at 105 °C (221 °F), or greater, 1.2 mm (3/64 in.) insulation max. 1756-TBSH Single wire connection: 0.33...2.1 mm^2 (22...14 AWG) solid or stranded shielded copper wire rated at 105 °C (221 °F), or greater, 1.2 mm (3/64 in.) insulation max.
Wire category [2]	1 - on signal ports
Enclosure type	None (open style)
North American temperature code	T4A

(1) UL certification for 120V 50/60 Hz nominal. Rockwell Automation specified to 74...132V, 47...63 Hz.
(2) Use this conductor category information for planning conductor routing as described in the system-level installation manual. See the Industrial Automation Wiring and Grounding Guidelines, publication 1770-4.1.

Environmental Specifications

Attribute	1756-OA8D
Temperature, operating IEC 60068-2-1 (Test Ae, Operating Cold), IEC 60068-2-2 (Test Be, Operating Dry Heat), IEC 60068-2-14 (Test Nb, Operating Thermal Shock)	0...60 °C (32...140 °F)
Temperature, nonoperating IEC 60068-2-1 (Test Ab, Unpackaged Nonoperating Cold), IEC 60068-2-2 (Test Bb, Unpackaged Nonoperating Dry Heat), IEC 60068-2-14 (Test Na, Unpackaged Nonoperating Thermal Shock)	-40...+85 °C (-40...+185 °F)
Relative humidity IEC 60068-2-30 (Test dB, Unpackaged Damp Heat)	5...95% noncondensing
Vibration IEC 60068-2-6 (Test Fc, Operating)	2 g @ 10...500 Hz
Shock, operating IEC 60068-2-27 (Test Ea, Unpackaged Shock)	30 g
Shock, nonoperating IEC 60068-2-27 (Test Ea, Unpackaged Shock)	50 g
Emissions	IEC 61000-6-4
ESD immunity IEC 61000-4-2	6 kV contact discharges 8 kV air discharges
Radiated RF immunity IEC 61000-4-3	10V/m with 1 kHz sine wave 80% AM from 80...2000 MHz 10V/m with 200 Hz 50% Pulse 100% AM @ 900 MHz 10V/m with 200 Hz 50% Pulse 100% AM @ 1890 MHz 3V/m with 1 kHz sine wave 80% AM from 2000...2700 MHz
EFT/B immunity IEC 61000-4-4	±4 kV at 5 kHz on signal ports
Surge transient immunity IEC 61000-4-5	±1 kV line-line (DM) and ±2 kV line-earth (CM) on signal ports
Conducted RF immunity IEC 61000-4-6	10V rms with 1 kHz sine wave 80% AM from 150 kHz...80 MHz

Certifications

Certification(1)	1756-OA8D
cULus	UL Listed Industrial Control Equipment, certified for US and Canada. See UL File E65584. UL Listed for Class I, Division 2 Group A,B,C,D Hazardous Locations, certified for U.S. and Canada. See UL File E194810.
CE	European Union 2014/30/EU EMC Directive, compliant with: • EN 61326-1; Meas./Control/Lab., Industrial Requirements • EN 61000-6-2; Industrial Immunity • EN 61000-6-4; Industrial Emissions • EN 61131-2; Programmable Controllers (Clause 8, Zone A & B) European Union 2014/35/EU LVD, compliant with EN 61131-2; Programmable Controllers (Clause 11)
RCM	Australian Radiocommunications Act, compliant with EN 61000-6-4; Industrial Emissions
FM	FM Approved Equipment for use in Class I Division 2 Group A,B,C,D Hazardous Locations
KC	Korean Registration of Broadcasting and Communications Equipment, compliant with Article 58-2 of Radio Waves Act, Clause 3
UKCA	In conformity with the following UK Statutory Instruments and their amendments: • 2016 No. 1091, Electromagnetic Compatibility Regulations • 2016 No. 1101, Electrical Equipment (Safety) Regulations • 2016 No. 1107, Equipment and Protective Systems Intended for Use in Potentially Explosive Atmospheres Regulations • 2012 No. 3032, Restriction of the Use of Certain Hazardous Substances in Electrical and Electronic Equipment
Morocco	In conformity with the following regulations: • Arrêté ministériel n° 6404-15 du 1 er muharram 1437 (15 octobre 2015) Équipements électriques destinés à être utilisés sous certaines limites de tension • Arrêté ministériel n° 6404-15 du 29 ramadan 1436 (16 juillet 2015) Compatibilité électromagnétique des équipements

(1) When product is marked. See the Product Certification link at rok.auto/certifications for Declarations of Conformity, Certificates, and other certification details.

1756-OA8E

ControlLogix 120V AC electronically fused output module

Simplified Schematic

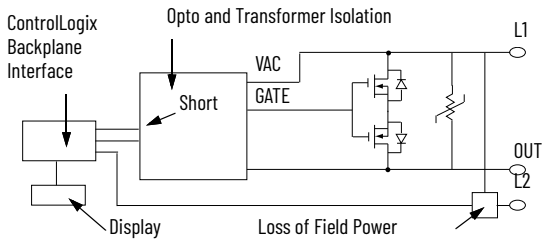

Surge Current Chart

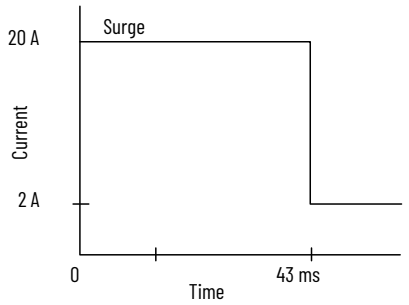

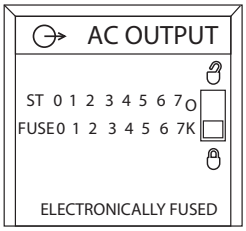

1756-OA8E

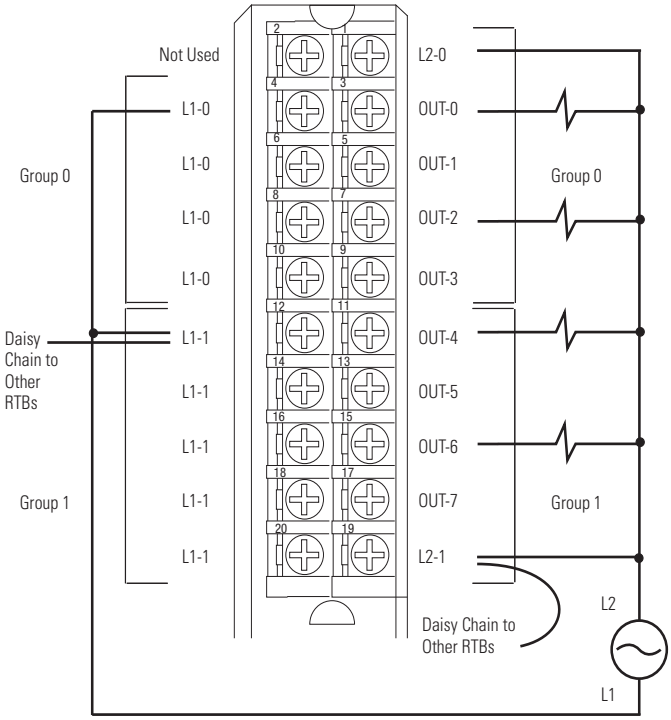

Diagnostic Specifications

Attribute	1756-OA8E
Short trip, min	>20 A for 100 ms
Field power loss (zero cross)	Detects at 25V peak min (firmware phase locked loop)
Time stamp of diagnostics	±1 ms

Technical Specifications

Attribute	1756-OA8E
Outputs	Eight electronic fusings (four points/group)
Pilot duty	Yes
Voltage category	120V AC 50/60 Hz
Operating voltage range[1]	74...132V AC 47...63 Hz
Output delay time Off to On On to Off	 9.3 ms @ 60 Hz 11 ms @ 50 Hz 9.3 ms @ 60 Hz 11 ms @ 50 Hz
Current draw @ 5.1V	200 mA
Current draw @ 24V	250 mA
Total backplane power	7.02 W
Power dissipation, max	5.5 W @ 60 °C (140 °F)
Thermal dissipation	18.76 BTU/hr
Off-state leakage current, max	3 mA per point
On-state voltage drop, max	4V peak @ 2 A
Current per point, max	2 A @ 60 °C (140 °F)
Current per group, max	4 A @ 30 °C (86 °F) linear derating 2 A @ 60 °C (140 °F) linear derating
Current per module, max	8 A @ 30 °C (86 °F) linear derating 4 A @ 60 °C (140 °F) linear derating
Surge current per point	20 A for 43 ms per point, repeatable every 2 s @ 60 °C (140 °F)
Load current, min	10 mA per point
Scheduled outputs	Synchronization within 16.7 s max, reference to the Coordinated System Time
States in Fault mode per point	Hold last state, On or Off (default is Off)
States in Program mode per point	Hold last state, On or Off (default is Off)
Isolation voltage	125V (continuous), basic insulation type, outputs-to-backplane, and output group-to-group No isolation between individual group outputs
Inhibit voltage, max	Zero crossing 25V peak
Module keying	Electronic, software configurable
Fusing	Electronically fused per point
Removable terminal block	1756-TBNH 1756-TBSH
RTB keying	User-defined mechanical
Slot width	1
Wire category[2]	1 - on signal ports
Enclosure type	None (open style)
North American temperature code	T4A

(1) UL certification for 120V 50/60Hz nominal. Rockwell Automation specified to 74...132V, 47...63 Hz.
(2) Use this conductor category information for planning conductor routing as described in the system-level installation manual. See the Industrial Automation Wiring and Grounding Guidelines, publication 1770-4.1.

Environmental Specifications

Attribute	1756-OA8E
Temperature, operating IEC 60068-2-1 (Test Ae, Operating Cold), IEC 60068-2-2 (Test Be, Operating Dry Heat), IEC 60068-2-14 (Test Nb, Operating Thermal Shock)	0...60 °C (32...140 °F)
Temperature, nonoperating IEC 60068-2-1 (Test Ab, Unpackaged Nonoperating Cold), IEC 60068-2-2 (Test Bb, Unpackaged Nonoperating Dry Heat), IEC 60068-2-14 (Test Na, Unpackaged Nonoperating Thermal Shock)	-40...+85 °C (-40...+185 °F)
Relative humidity IEC 60068-2-30 (Test dB, Unpackaged Damp Heat)	5...95% noncondensing
Vibration IEC 60068-2-6 (Test Fc, Operating)	2 g @ 10...500 Hz
Shock, operating IEC 60068-2-27 (Test Ea, Unpackaged Shock)	30 g
Shock, nonoperating IEC 60068-2-27 (Test Ea, Unpackaged Shock)	50 g
Emissions	IEC 61000-6-4
ESD immunity IEC 61000-4-2	6 kV contact discharges 8 kV air discharges
Radiated RF immunity IEC 61000-4-3	10V/m with 1 kHz sine wave 80% AM from 80...2000 MHz 10V/m with 200 Hz 50% Pulse 100% AM at 900 MHz 10V/m with 200 Hz 50% Pulse 100% AM at 1890 MHz 3V/m with 1 kHz sine wave 80% AM from 2000...2700 MHz
EFT/B immunity IEC 61000-4-4	±4 kV at 5 kHz on signal ports
Surge transient immunity IEC 61000-4-5	±1 kV line-line (DM) and ±2 kV line-earth (CM) on signal ports
Conducted RF immunity IEC 61000-4-6	10V rms with 1 kHz sine wave 80% AM from 150 kHz...80 MHz

Certifications

Certification(1)	1756-OA8E
cULus	UL Listed Industrial Control Equipment, certified for US and Canada. See UL File E65584. UL Listed for Class I, Division 2 Group A,B,C,D Hazardous Locations, certified for U.S. and Canada. See UL File E194810.
CE	European Union 2014/30/EU EMC Directive, compliant with: • EN 61326-1; Meas./Control/Lab., Industrial Requirements • EN 61000-6-2; Industrial Immunity • EN 61000-6-4; Industrial Emissions • EN 61131-2; Programmable Controllers (Clause 8, Zone A & B) European Union 2014/35/EU LVD, compliant with EN 61131-2; Programmable Controllers (Clause 11)
RCM	Australian Radiocommunications Act, compliant with EN 61000-6-4; Industrial Emissions
FM	FM Approved Equipment for use in Class I Division 2 Group A,B,C,D Hazardous Locations
KC	Korean Registration of Broadcasting and Communications Equipment, compliant with Article 58-2 of Radio Waves Act, Clause 3
UKCA	In conformity with the following UK Statutory Instruments and their amendments: • 2016 No. 1091, Electromagnetic Compatibility Regulations • 2016 No. 1101, Electrical Equipment (Safety) Regulations • 2016 No. 1107, Equipment and Protective Systems Intended for Use in Potentially Explosive Atmospheres Regulations • 2012 No. 3032, Restriction of the Use of Certain Hazardous Substances in Electrical and Electronic Equipment
Morocco	In conformity with the following regulations: • Arrêté ministériel n° 6404-15 du 1 er muharram 1437 (15 octobre 2015) Équipements électriques destinés à être utilisés sous certaines limites de tension • Arrêté ministériel n° 6404-15 du 29 ramadan 1436 (16 juillet 2015) Compatibilité électromagnétique des équipements

(1) When product is marked. See the Product Certification link at rok.auto/certifications for Declarations of Conformity, Certificates, and other certification details.

1756-OA16, 1756-OA16K

ControlLogix 120/240V AC output module

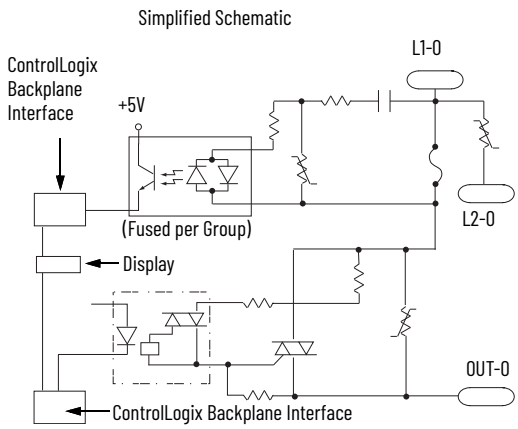

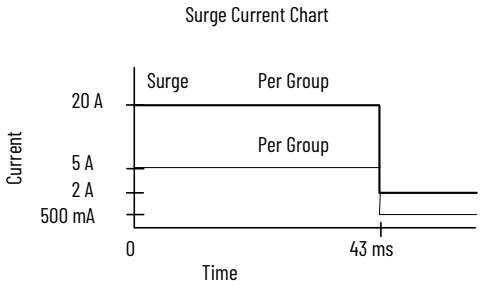

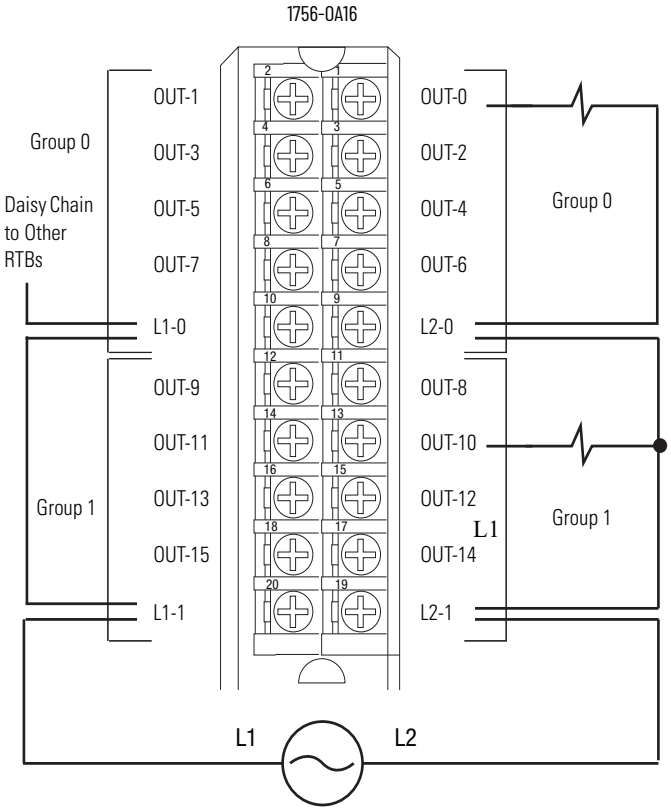

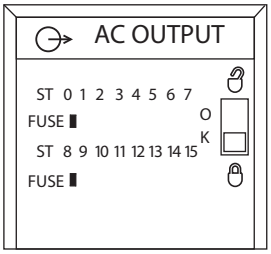

Diagnostic Specifications

Attribute	1756-OA16, 1756-OA16K
Time stamp of diagnostics	±1 ms
Fuse blown	One fuse and indicator/group

Technical Specifications

Attribute	1756-OA16, 1756-OA16K
Outputs	16 mechanically fused/group (8 points/group)
Pilot duty	0.5 A
Voltage category	120/240V AC 50/60 Hz
Operating voltage range(1)	74...265V AC 47...63 Hz
Output delay time Off to On On to Off	9.3 ms @ 60 Hz 11 ms @ 50 Hz 9.3 ms @ 60 Hz 11 ms @ 50 Hz
Current draw @ 5.1V	400 mA
Current draw @ 24V	2 mA
Total backplane power	2.1 W
Power dissipation, max	6.5 W @ 60 °C (140 °F)
Thermal dissipation	22.17 BTU/hr
Off-state leakage current, max	3 mA per point
On-state voltage drop, max	1.5V @ 0.5 A 5.7V @ load current < 50 mA
Current per point, max	0.5 A @ 60 °C (140 °F)
Current per group, max	2 A @ 60 °C (140 °F)
Current per module, max	4 A @ 60 °C (140 °F)
Surge current per point	5 A for 43 ms per point, repeatable every 2 s @ 60 °C (140 °F)
Surge current per group	15 A for 43 ms per group, repeatable every 2 s @ 60 °C (140 °F)
Load current, min	10 mA per point
Commutating voltage	4V/µs for loads > 50 mA 0.2V/µs for loads < 50 mA(2)
Scheduled outputs	Synchronization within 16.7 s max, reference to the Coordinated System Time
States in Fault mode per point	Hold last state, On or Off (Off is default)
States in Program mode per point	Hold last state, On or Off (Off is default)
Isolation voltage	250V (continuous), basic insulation type, outputs to backplane, and group to group
Inhibit voltage, max	Zero crossing 60V peak
Module keying	Electronic, software configurable
Fusing	Mechanically fused/group, 3.15 A @ 250V AC slow blow, 1500 A interruption current, Littelfuse p/n H2153.15
Removable terminal block	1756-TBNH 1756-TBSH
RTB keying	User-defined mechanical
Slot width	1
Wire size	11756-TBNH Single wire connection: 0.33...2.1 mm^2 (22...14 AWG) solid or stranded shielded copper wire rated at 105 °C (221 °F), or greater, 1.2 mm (3/64 in.) insulation max. Double wire connection: 0.33...1.3 mm^2 (22...16 AWG) solid or stranded copper wire rated at 105 °C (221 °F), or greater, 1.2 mm (3/64 in.) insulation max. 1756-TBSH Single wire connection: 0.33...2.1 mm^2 (22...14 AWG) solid or stranded shielded copper wire rated at 105 °C (221 °F), or greater, 1.2 mm (3/64 in.) insulation max.
Wire category(3)	1 - on signal ports
Enclosure type	None (open style)
North American temperature code	T4

(1) UL certification for 120/240V 50/60 Hz nominal. Rockwell Automation specified to 74...265V, 47...63 Hz.
(2) The commutating dv/dt of the output voltage (OUTPUT to L2) should not exceed 0.2V/µs for loads under 50 mA. The commutating dv/dt rating of the module for loads 50...500 mA (OUTPUT to L2) is 4V/µs maximum. If the commutating dv/dt rating of the TRIAC is exceeded, the TRIAC could latch on. If the commutating dv/dt rating is exceeded in the 10...50 mA range, a resistor can be added AC across the output and L2. The purpose of this resistor is to increase the total output current to 50 mA (I=V/R). At 50 mA and above, the module has a higher commutating dv/dt rating. When adding a resistor for the output to L2, be sure it is rated for the power that it dissipates (P=(V**2)/R). If the commutating dv/dt rating is exceeded in the 50...500 mA range, the L1 AC waveform could be at fault. Be sure that the waveform is a good sinusoid, void of any anomalies such as distorted, or flattened sections.
(3) Use this conductor category information for planning conductor routing as described in the system-level installation manual. See the Industrial Automation Wiring and Grounding Guidelines, publication 1770-4.1.

Environmental Specifications

Attribute	1756-OA16, 1756-OA16K
Temperature, operating IEC 60068-2-1 (Test Ae, Operating Cold), IEC 60068-2-2 (Test Be, Operating Dry Heat), IEC 60068-2-14 (Test Nb, Operating Thermal Shock)	0...60 °C (32...140 °F)
Temperature, nonoperating IEC 60068-2-1 (Test Ab, Unpackaged Nonoperating Cold), IEC 60068-2-2 (Test Bb, Unpackaged Nonoperating Dry Heat), IEC 60068-2-14 (Test Na, Unpackaged Nonoperating Thermal Shock)	-40...+85 °C (-40...+185 °F)
Relative humidity IEC 60068-2-30 (Test dB, Unpackaged Damp Heat)	5...95% noncondensing
Vibration IEC 60068-2-6 (Test Fc, Operating)	2 g @ 10...500 Hz
Shock, operating IEC 60068-2-27 (Test Ea, Unpackaged Shock)	30 g
Shock, nonoperating IEC 60068-2-27 (Test Ea, Unpackaged Shock)	50 g
Emissions	IEC 61000-6-4
ESD immunity IEC 61000-4-2	6 kV contact discharges 8 kV air discharges
Radiated RF immunity IEC 61000-4-3	10V/m with 1 kHz sine wave 80% AM from 80...2000 MHz 10V/m with 200 Hz 50% Pulse 100% AM @ 900 MHz 10V/m with 200 Hz 50% Pulse 100% AM @ 1890 MHz 3V/m with 1 kHz sine wave 80% AM from 2000...2700 MHz
EFT/B immunity IEC 61000-4-4	±4 kV at 5 kHz on signal ports
Surge transient immunity IEC 61000-4-5	±1 kV line-line (DM) and ±2 kV line-earth (CM) on signal ports
Conducted RF immunity IEC 61000-4-6	10V rms with 1 kHz sine wave 80% AM from 150 kHz...80 MHz

Certifications

Certification(1)	1756-OA16, 1756-OA16K
cULus	UL Listed Industrial Control Equipment, certified for US and Canada. See UL File E65584. UL Listed for Class I, Division 2 Group A,B,C,D Hazardous Locations, certified for U.S. and Canada. See UL File E194810.
CE	European Union 2014/30/EU EMC Directive, compliant with: • EN 61326-1; Meas./Control/Lab., Industrial Requirements • EN 61000-6-2; Industrial Immunity • EN 61000-6-4; Industrial Emissions • EN 61131-2; Programmable Controllers (Clause 8, Zone A & B) European Union 2014/35/EU LVD, compliant with EN 61131-2; Programmable Controllers (Clause 11)
RCM	Australian Radiocommunications Act, compliant with EN 61000-6-4; Industrial Emissions
FM	FM Approved Equipment for use in Class I Division 2 Group A,B,C,D Hazardous Locations
KC	Korean Registration of Broadcasting and Communications Equipment, compliant with Article 58-2 of Radio Waves Act, Clause 3
UKCA	In conformity with the following UK Statutory Instruments and their amendments: • 2016 No. 1091, Electromagnetic Compatibility Regulations • 2016 No. 1101, Electrical Equipment (Safety) Regulations • 2016 No. 1107, Equipment and Protective Systems Intended for Use in Potentially Explosive Atmospheres Regulations • 2012 No. 3032, Restriction of the Use of Certain Hazardous Substances in Electrical and Electronic Equipment
Morocco	In conformity with the following regulations: • Arrêté ministériel n° 6404-15 du 1 er muharram 1437 (15 octobre 2015) Équipements électriques destinés à être utilisés sous certaines limites de tension • Arrêté ministériel n° 6404-15 du 29 ramadan 1436 (16 juillet 2015) Compatibilité électromagnétique des équipements

(1) When product is marked. See the Product Certification link at rok.auto/certifications for Declarations of Conformity, Certificates, and other certification details.

1756-OA16I, 1756-OA16IK

ControlLogix 120/240V AC isolated output module

Simplified Schematic

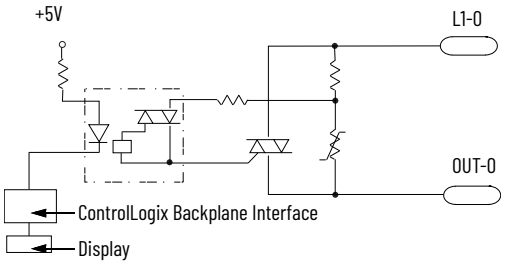

Surge Current Chart

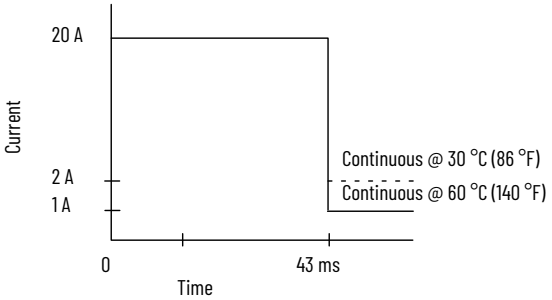

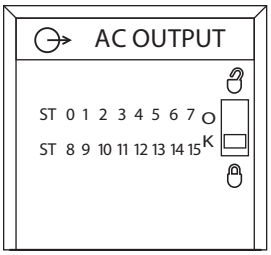

1756-OA16I

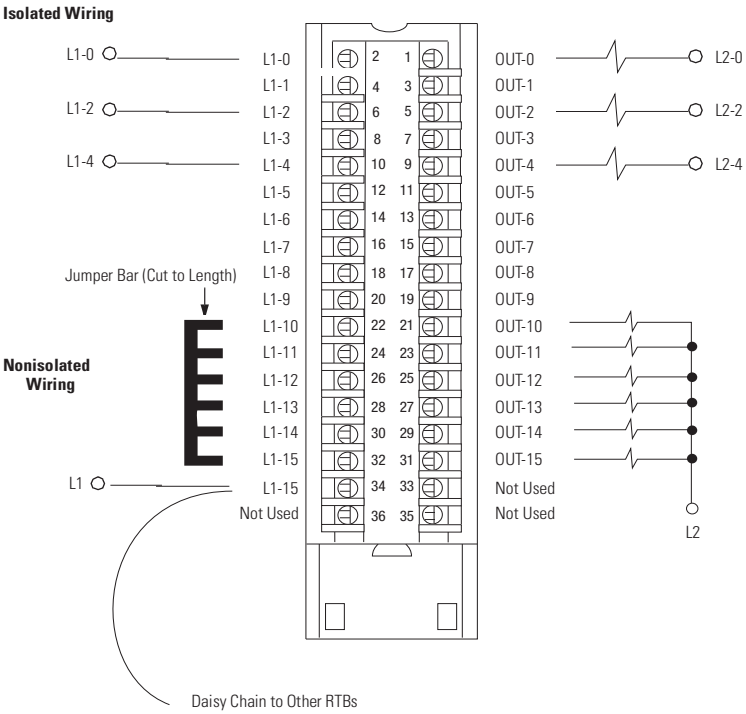

Additional jumper bars are available as catalog number 1756-JMPR.

Technical Specifications

Attribute	1756-OA16I, 1756-OA16IK
Outputs	16 individually isolated
Pilot duty	Yes
Voltage category	120/240V AC 50/60 Hz
Operating voltage range(1)	74...265V AC 47...63 Hz
Output delay time Off to On On to Off	 9.3 ms @ 60 Hz 11 ms @ 50 Hz 9.3 ms @ 60 Hz 11 ms @ 50 Hz
Current draw @ 5.1V	300 mA
Current draw @ 24V	2.5 mA
Total backplane power	1.59 W
Power dissipation, max	5.5 W @ 60 °C (140 °F)
Thermal dissipation	18.76 BTU/hr
Off-state leakage current, max	3 mA per point
On-state voltage drop, max	1.5V peak @ 2 A 6V peak @ load current < 50 mA
Current per point, max	2 A @ 30 °C (86 °F) linear derating 1 A @ 60 °C (140 °F) linear derating
Current per module, max	5 A @ 30 °C (86 °F) linear derating 4 A @ 60 °C (140 °F) linear derating
Surge current per point	20 A for 43 ms per point, repeatable every 2 s @ 60 °C (140 °F)
Load current, min	10 mA per point
Commutating voltage	4V/µs for loads > 50 mA 0.2V/µs for loads < 50 mA(2)
Scheduled outputs	Synchronization within 16.7 s max, reference to the Coordinated System Time
States in Fault mode per point	Hold last state, On or Off (Off is default)
States in Program mode per point	Hold last state, On or Off (Off is default)
Isolation voltage	250V (continuous), basic insulation type, outputs-to-backplane, and output-to-output
Inhibit voltage, max	Zero crossing 60V peak
Module keying	Electronic, software configurable
Fusing	Not protected. A fused IFM is recommended to help protect outputs
Removable terminal block	1756-TBCH 1756-TBS6H
RTB keying	User-defined mechanical
Slot width	1
Wire category	1(3)
Enclosure type	None (open style)
North American temperature code	T4A

(1) UL certification for 120/240V 50/60 Hz nominal. Rockwell Automation specified to 74...265V, 47...63 Hz.
(2) The commutating dv/dt of the output voltage (OUTPUT to L2) should not exceed 0.2V/µs for loads under 50 mA. The commutating dv/dt rating of the module for loads 50...500 mA (OUTPUT to L2) is 4V/µs maximum. If the commutating dv/dt rating of the TRIAC is exceeded, the TRIAC could latch on. If the commutating dv/dt rating is exceeded in the 10...50 mA range, a resistor can be added AC across the output and L2. The purpose of this resistor is to increase the total output current to 50 mA (I=V/R). At 50 mA and above, the module has a higher commutating dv/dt rating. When adding a resistor for the output to L2, be sure it is rated for the power that it dissipates (P=(V**2)/R). If the commutating dv/dt rating is exceeded in the 50...500 mA range, the L1 AC waveform could be at fault. Be sure that the waveform is a good sinusoid, void of any anomalies such as distorted, or flattened sections.
(3) Use this conductor category information for planning conductor routing as described in the system-level installation manual. See the Industrial Automation Wiring and Grounding Guidelines, publication 1770-4.1.

Environmental Specifications

Attribute	1756-OA16I, 1756-OA16IK
Temperature, operating IEC 60068-2-1 (Test Ae, Operating Cold), IEC 60068-2-2 (Test Be, Operating Dry Heat), IEC 60068-2-14 (Test Nb, Operating Thermal Shock)	0...60 °C (32...140 °F)
Temperature, nonoperating IEC 60068-2-1 (Test Ab, Unpackaged Nonoperating Cold), IEC 60068-2-2 (Test Bb, Unpackaged Nonoperating Dry Heat), IEC 60068-2-14 (Test Na, Unpackaged Nonoperating Thermal Shock)	-40...+85 °C (-40...+185 °F)
Relative humidity IEC 60068-2-30 (Test dB, Unpackaged Damp Heat)	5...95% noncondensing
Vibration IEC 60068-2-6 (Test Fc, Operating)	2 g @ 10...500 Hz
Shock, operating IEC 60068-2-27 (Test Ea, Unpackaged Shock)	30 g
Shock, nonoperating IEC 60068-2-27 (Test Ea, Unpackaged Shock)	50 g
Emissions	IEC 61000-6-4
ESD immunity IEC 61000-4-2	6 kV contact discharges 8 kV air discharges
Radiated RF immunity IEC 61000-4-3	10V/m with 1 kHz sine wave 80% AM from 80...2000 MHz 10V/m with 200 Hz 50% Pulse 100% AM @ 900 MHz 10V/m with 200 Hz 50% Pulse 100% AM @ 1890 MHz 3V/m with 1 kHz sine wave 80% AM from 2000...2700 MHz
EFT/B immunity IEC 61000-4-4	±4 kV at 5 kHz on signal ports
Surge transient immunity IEC 61000-4-5	±1 kV line-line (DM) and ±2 kV line-earth (CM) on signal ports
Conducted RF immunity IEC 61000-4-6	10V rms with 1 kHz sine wave 80% AM from 150 kHz...80 MHz

Certifications

Certification(1)	1756-OA16I, 1756-OA16IK
cULus	UL Listed Industrial Control Equipment, certified for US and Canada. See UL File E65584. UL Listed for Class I, Division 2 Group A,B,C,D Hazardous Locations, certified for U.S. and Canada. See UL File E194810.
CE	European Union 2014/30/EU EMC Directive, compliant with: • EN 61326-1; Meas./Control/Lab., Industrial Requirements • EN 61000-6-2; Industrial Immunity • EN 61000-6-4; Industrial Emissions • EN 61131-2; Programmable Controllers (Clause 8, Zone A & B) European Union 2014/35/EU LVD, compliant with EN 61131-2; Programmable Controllers (Clause 11)
RCM	Australian Radiocommunications Act, compliant with EN 61000-6-4; Industrial Emissions
FM	FM Approved Equipment for use in Class I Division 2 Group A,B,C,D Hazardous Locations
KC	Korean Registration of Broadcasting and Communications Equipment, compliant with Article 58-2 of Radio Waves Act, Clause 3
UKCA	In conformity with the following UK Statutory Instruments and their amendments: • 2016 No. 1091, Electromagnetic Compatibility Regulations • 2016 No. 1101, Electrical Equipment (Safety) Regulations • 2016 No. 1107, Equipment and Protective Systems Intended for Use in Potentially Explosive Atmospheres Regulations • 2012 No. 3032, Restriction of the Use of Certain Hazardous Substances in Electrical and Electronic Equipment
Morocco	In conformity with the following regulations: • Arrêté ministériel n° 6404-15 du 1 er muharram 1437 (15 octobre 2015) Équipements électriques destinés à être utilisés sous certaines limites de tension • Arrêté ministériel n° 6404-15 du 29 ramadan 1436 (16 juillet 2015) Compatibilité électromagnétique des équipements

(1) When product is marked. See the Product Certification link at rok.auto/certifications for Declarations of Conformity, Certificates, and other certification details.

1756-ON8, 1756-ON8K

ControlLogix 24V AC output module

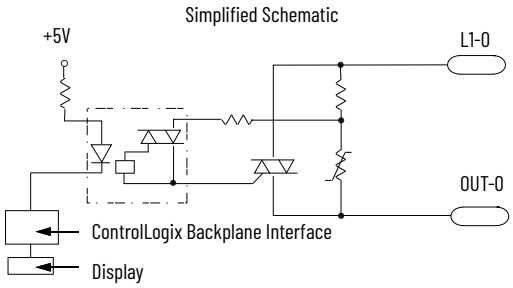

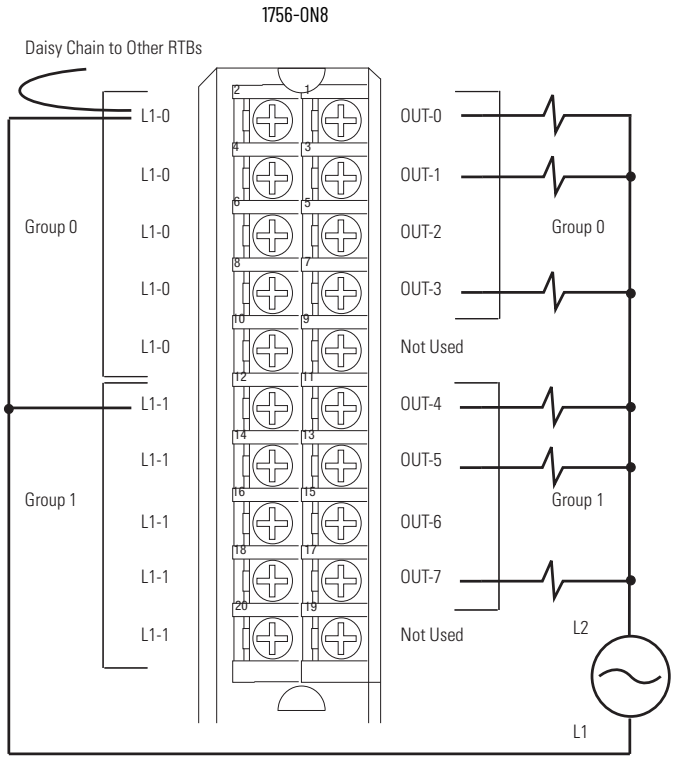

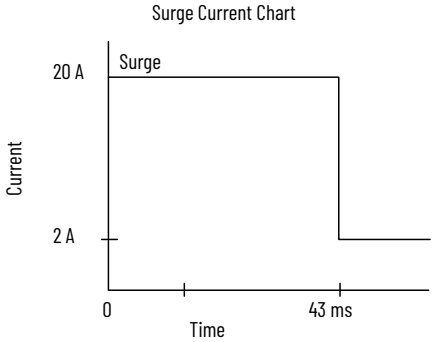

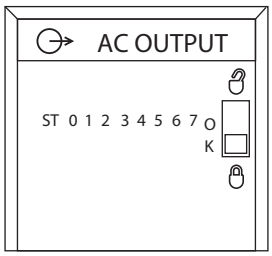

Technical Specifications

Attribute	1756-ON8, 1756-ON8K
Outputs	8 (4 points/group)
Voltage category	24V AC 50/60 Hz
Operating voltage range[1]	10...30V AC, current >50 mA, 47...63Hz 16...30V AC, current <50 mA, 47...63Hz
Output delay time Off to On On to Off	 9.3 ms @ 60 Hz 11 ms @ 50 Hz 9.3 ms @ 60 Hz 11 ms @ 50 Hz
Voltage and current ratings	Backplane: 5.1V DC, 200 mA 24V DC, 2 mA Output: 10...30V AC, 50/60Hz, 2 A Pilot Duty (DC-13/SQ) MDL: 5A/4A 30°C/60°C
Current draw @ 5.1V	200 mA
Current draw @ 24V	2 mA
Total backplane power	1.07 W

Technical Specifications (Continued)

Attribute	1756-ON8, 1756-ON8K
Power dissipation, max	5.1 W @ 60 °C (140 °F)
Thermal dissipation	17.39 BTU/hr
Off-state leakage current, max	3 mA per point
On-state voltage drop, max	1.5V peak @ 2 A 6V peak @ load current < 50 mA
Current per point, max	2 A @ 60 °C (140 °F)
Current per module, max	5 A @ 30 °C (86 °F) linear derating 4 A @ 60 °C (140 °F) linear derating
Surge current per point	20 A for 43 ms per point, repeatable every 2 s @ 60 °C (140 °F)
Load current, min	10 mA per point
Commutating voltage	4V/µs for loads > 50 mA 0.2V/µs for loads < 50 mA(2)
Scheduled outputs	Synchronization within 16.7 s max, reference to the Coordinated System Time
States in Fault mode per point	Hold last state, On or Off (Off is default)
States in Program mode per point	Hold last state, On or Off (Off is default)
Isolation voltage	250V (continuous), basic insulation type, outputs-to-backplane, and output group-to-group No isolation between individual group outputs
Module keying	Electronic, software configurable
Fusing	Not protected. A fused IFM is recommended to help protect outputs.
Removable terminal block	1756-TBNH 1756-TBSH
RTB keying	User-defined mechanical
Slot width	1
Wire size	1756-TBNH Single wire connection: 0.33...2.1 mm^2 (22...14 AWG) solid or stranded shielded copper wire rated at 105 °C (221 °F), or greater, 1.2 mm (3/64 in.) insulation max. Double wire connection: 0.33...1.3 mm^2 (22...16 AWG) solid or stranded copper wire rated at 105 °C (221 °F), or greater, 1.2 mm (3/64 in.) insulation max. 1756-TBSH Single wire connection: 0.33...2.1 mm^2 (22...14 AWG) solid or stranded shielded copper wire rated at 105 °C (221 °F), or greater, 1.2 mm (3/64 in.) insulation max.
Terminal block torque specs	1756-TBNH 1.36 N•m (12 lb·in)
Wire category(3)	1 - on signal ports
Enclosure type	None (open style)
Temperature code	T4

(1) UL certification for 24V 50/60 Hz nominal. Rockwell Automation specified to 10...30V, 47...63 Hz.
(2) The commutating dv/dt of the output voltage (OUTPUT to L2) should not exceed 0.2V/µs for loads under 50 mA. The commutating dv/dt rating of the module for loads 50...500 mA (OUTPUT to L2) is 4V/µs maximum. If the commutating dv/dt rating of the TRIAC is exceeded, the TRIAC could latch on. If the commutating dv/dt rating is exceeded in the 10...50 mA range, a resistor can be added AC across the output and L2. The purpose of this resistor is to increase the total output current to 50 mA (I=V/R). At 50 mA and above, the module has a higher commutating dv/dt rating. When adding a resistor for the output to L2, be sure it is rated for the power that it dissipates (P=(V**2)/R). If the commutating dv/dt rating is exceeded in the 50...500 mA range, the L1 AC waveform could be at fault. Be sure that the waveform is a good sinusoid, void of any anomalies such as distorted, or flattened sections.
(3) Use this conductor category information for planning conductor routing as described in the system-level installation manual. See the Industrial Automation Wiring and Grounding Guidelines, publication 1770-4.1.

Environmental Specifications

Attribute	1756-ON8, 1756-ON8K
Temperature, operating IEC 60068-2-1 (Test Ae, Operating Cold), IEC 60068-2-2 (Test Be, Operating Dry Heat), IEC 60068-2-14 (Test Nb, Operating Thermal Shock)	0 °C < Ta < 60 °C (32 °F < Ta < 140 °F)
Temperature, nonoperating IEC 60068-2-1 (Test Ab, Unpackaged Nonoperating Cold), IEC 60068-2-2 (Test Bb, Unpackaged Nonoperating Dry Heat), IEC 60068-2-14 (Test Na, Unpackaged Nonoperating Thermal Shock)	-40...+85 °C (-40...+185 °F)
Relative humidity IEC 60068-2-30 (Test dB, Unpackaged Damp Heat)	5...95% noncondensing
Vibration IEC 60068-2-6 (Test Fc, Operating)	2 g @ 10...500 Hz
Shock, operating IEC 60068-2-27 (Test Ea, Unpackaged Shock)	30 g
Shock, nonoperating IEC 60068-2-27 (Test Ea, Unpackaged Shock)	30 g
Emissions	IEC 61000-6-4
ESD immunity IEC 61000-4-2	6 kV contact discharges 8 kV air discharges
Radiated RF immunity IEC 61000-4-3	10V/m with 1 kHz sine wave 80% AM from 80...2000 MHz 10V/m with 200 Hz 50% Pulse 100% AM @ 900 MHz 10V/m with 200 Hz 50% Pulse 100% AM @ 1890 MHz 3V/m with 1 kHz sine wave 80% AM from 2000...2700 MHz
EFT/B immunity IEC 61000-4-4	±4 kV at 5 kHz on signal ports
Conducted RF immunity IEC 61000-4-6	10V rms with 1 kHz sine wave 80% AM from 150 kHz...80 MHz

Certifications

Certification[1]	1756-ON8, 1756-ON8K
cULus	UL Listed Industrial Control Equipment, certified for US and Canada. See UL File E65584. UL Listed for Class I, Division 2 Group A,B,C,D Hazardous Locations, certified for U.S. and Canada. See UL File E194810.
CE	European Union 2014/30/EU EMC Directive, compliant with: • EN 61326-1; Meas./Control/Lab., Industrial Requirements • EN 61000-6-2; Industrial Immunity • EN 61000-6-4; Industrial Emissions • EN 61131-2; Programmable Controllers (Clause 8, Zone A & B) European Union 2014/35/EU LVD, compliant with: EN 61131-2; Programmable Controllers (Clause 11)
RCM	Australian Radiocommunications Act, compliant with EN 61000-6-4; Industrial Emissions
Ex	European Union 2014/34/EU ATEX Directive, compliant with: • IEC 60079-0 Edition 7; General Requirements • EN 60079-7; Potentially Explosive Atmospheres, Protection "e" • II 3 G Ex ec IIC T4 Gc • UL22ATEX2820
IECEx	IECEx System, compliant with: • IEC 60079-0 Edition 7; General Requirements • IEC 60079-7; Potentially Explosive Atmospheres, Protection "e" • II 3 G Ex ec IIC T4 Gc • IECEx UL 22.0065
UKex	In conformity with the following UKex Statutory Instruments and their amendments: • Schedule 1 of the UKEX Regulation 2016 No. 1107 • Equipment protection by increased safety "e", reference certificate number UL22UKEX2602X • Zone 2 classification according to UKEX Regulation 2016 No. 1107
FM	FM Approved Equipment for use in Class I Division 2 Group A,B,C,D Hazardous Locations
KC	Korean Registration of Broadcasting and Communications Equipment, compliant with Article 58-2 of Radio Waves Act, Clause 3
UKCA	In conformity with the following UK Statutory Instruments and their amendments: • 2016 No. 1091, Electromagnetic Compatibility Regulations • 2016 No. 1101, Electrical Equipment (Safety) Regulations • 2016 No. 1107, Equipment and Protective Systems Intended for Use in Potentially Explosive Atmospheres Regulations • 2012 No. 3032, Restriction of the Use of Certain Hazardous Substances in Electrical and Electronic Equipment
Morocco	In conformity with the following regulations: • Arrêté ministériel n° 6404-15 du 1 er muharram 1437 (15 octobre 2015) Équipements électriques destinés à être utilisés sous certaines limites de tension • Arrêté ministériel n° 6404-15 du 29 ramadan 1436 (16 juillet 2015) Compatibilité électromagnétique des équipements
CCC	CCC 2020122309111998 CNCA-C23-01 强制性产品认证实施规则 防爆电气 CNCA-C23-01 CCC Implementation Rule Explosion-Proof Electrical Products

(1) When product is marked. See the Product Certification link at rok.auto/certifications for Declarations of Conformity, Certificates, and other certification details.

1756-IB16, 1756-IB16K, 1756-IB16XT

ControlLogix DC (10...31.2V) input module

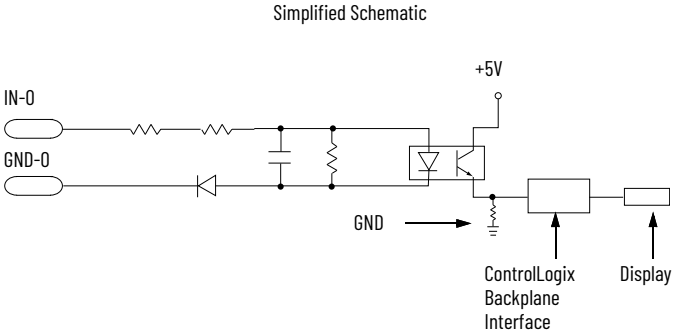

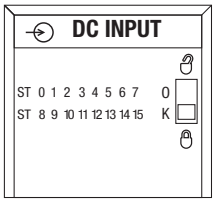

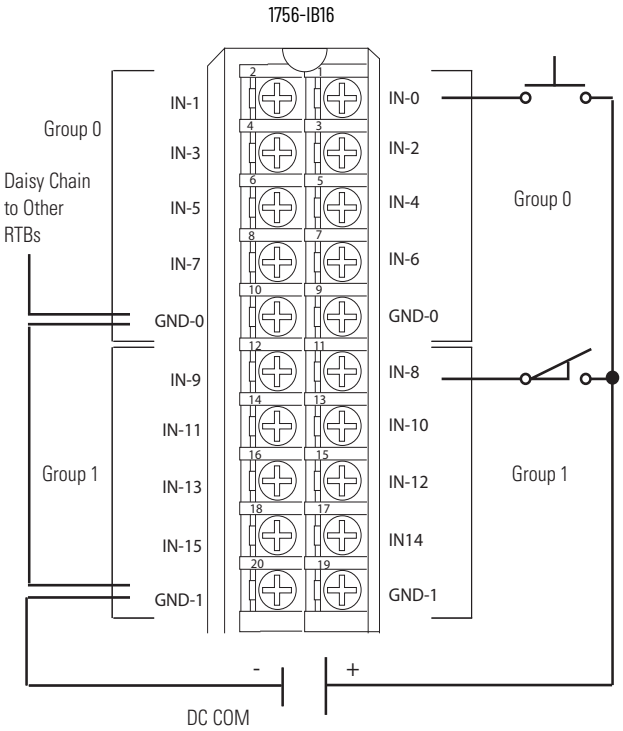

Technical Specifications

Attribute	1756-IB16, 1756-IB16K,	1756-IB16XT
Inputs	16 (8 points/group)	
Voltage category	12/24V DC sink	
Operating voltage range	10...31.2V DC	
Input voltage, nom	24V DC	
Input delay time (screw to backplane) Off to On On to Off	 Hardware delay: 290 µs nom/1 ms max + filter time User-selectable filter time: 0 ms, 1 ms, or 2 ms Hardware delay: 700 µs nom/2 ms max + filter time User-selectable filter time: 0, 1, 2, 9, or 18 ms	
Current draw @ 5.1V	100 mA	
Current draw @ 24V	2 mA	
Total backplane power	0.56 W	
Power dissipation, max	5.1 W @ 60 °C (140 °F)	
Thermal dissipation	17.39 BTU/hr	
Off-state voltage, max	5V	
Off-state current, max	1.5 mA	
On-state current, min	2 mA @ 10V DC	
On-state current, max	10 mA @ 31.2V DC	
Inrush current, max	250 mA peak (decaying to < 37% in 22 ms, without activation)	
Input impedance, max	3.12 kΩ @ 31.2V DC	
Cyclic update time	200 µs...750 ms	
Change of state	Software configurable	
Time stamp of inputs	±200 µs	
Isolation voltage	250V (continuous), reinforced insulation type, inputs-to-backplane 250V (continuous), basic insulation type, input group-to group No isolation between individual inputs	
Module keying	Electronic, software configurable	
Removable terminal block housing	1756-TBNH 1756-TBSH	1756-TBNHXT 1756-TBSHXT
RTB keying	User-defined mechanical	
Slot width	1	
Wire category	1(1)	
Wire size	1756-TBNH	1756-TBNHXT
	Single wire connection: 0.33...2.1 mm^2 (22...14 AWG) solid or stranded copper wire rated at 105 °C (221 °F), or greater, 1.2 mm (3/64 in.) insulation max. Do not wire more than one conductors on any terminal. Double wire connection: 0.33...1.3 mm^2 (22...16 AWG) solid or stranded copper wire rated at 105 °C (221 °F), or greater, 1.2 mm (3/64 in.) insulation max. Do not wire more than two conductors on any terminal.	
	1756-TBSH	1756-TBSHXT
	Single wire connection: 0.33...2.1 mm^2 (22...14 AWG) solid or stranded shielded copper wire rated at 105 °C (221 °F), or greater, 1.2 mm (3/64 in.) insulation max.	
Terminal block torque specs	1756-TBNH, 1756-TBNHXT 1.36 N•m (12 lb•in)	
Enclosure type	None (open-style)	
Temperature code	T3	
Reverse polarity protection	Yes	

(1) Use this conductor category information for planning conductor routing as described in the system-level installation manual. See the Industrial Automation Wiring and Grounding Guidelines, publication 1770-4.1.

Environmental Specifications

Attribute	1756-IB16, 1756-IB16K	1756-IB16XT
Temperature, operating IEC 60068-2-1 (Test Ae, Operating Cold), IEC 60068-2-2 (Test Be, Operating Dry Heat), IEC 60068-2-14 (Test Nb, Operating Thermal Shock)	0...60 °C (32...140 °F)	
Temperature, nonoperating IEC 60068-2-1 (Test Ab, Unpackaged Nonoperating Cold), IEC 60068-2-2 (Test Bb, Unpackaged Nonoperating Dry Heat), IEC 60068-2-14 (Test Na, Unpackaged Nonoperating Thermal Shock)	-40...+85 °C (-40...+185 °F)	
Relative humidity IEC 60068-2-30 (Test dB, Unpackaged Damp Heat)	5...95% noncondensing	
Conformal Coated(1)	Yes	
Corrosive Atmosphere(1) • ASTM B845-97 Method H Accelerated Test (20-Day Exposure)	Severity Level G3(2) per ANSI/ISA 71.04-2013, Airborne Contaminants—Gases Severity Level CX(2)(3) per IEC 60721-3-3:2019, Chemically Active Substances	–
• ASTM B845-97 Method K Accelerated Test (30-Day Exposure) • Plus additional Rockwell Automation proprietary accelerated corrosive environment test protocol for specific industries with sources of gaseous sulfur compounds.	–	Severity Level GX(4)(5) per ANSI/ISA 71.04-2013, Airborne Contaminants—Gases Severity Level CX(4) per IEC 60721-3-3:2019, Chemically Active Substances
Vibration IEC 60068-2-6 (Test Fc, Operating)	2 g @ 10...500 Hz	
Shock, operating IEC 60068-2-27 (Test Ea, Unpackaged Shock)	30 g	
Shock, nonoperating IEC 60068-2-27 (Test Ea, Unpackaged Shock)	50 g	
Emissions	IEC 61000-6-4	
ESD immunity IEC 61000-4-2	6 kV contact discharges 8 kV air discharges	
Radiated RF immunity IEC 61000-4-3	10V/m with 1 kHz sine wave 80% AM from 80...2000 MHz 10V/m with 200 Hz 50% Pulse 100% AM @ 900 MHz 10V/m with 200 Hz 50% Pulse 100% AM @ 1890 MHz 3V/m with 1 kHz sine wave 80% AM from 2000...2700 MHz	
EFT/B immunity IEC 61000-4-4	±4 kV at 5 kHz on signal ports	
Surge transient immunity IEC 61000-4-5	±1 kV line-line (DM) and ±2 kV line-earth (CM) on signal ports	
Conducted RF immunity IEC 61000-4-6	10V rms with 1 kHz sine wave 80% AM from 150 kHz...80 MHz	

(1) Only applicable to modules that end with a 'K or 'XT'.
(2) The module and the corresponding RTB must remain installed at all times and the RTB door must remain closed, for the product to maintain its corrosive atmosphere rating.
(3) Up to 9.6 microns per year, corrosion rate of copper.
(4) The module and the corresponding RTB must remain installed at all times and the RTB door must remain closed, once the factory packaging seal is broken, for the product to maintain its corrosive atmosphere rating.
(5) Up to 2100 angstroms of film growth per 30 days of copper and/or silver reactivity.

Certifications

Certification[1]	1756-IB16, 1756-IB16K, 1756-IB16XT
cULus	UL Listed Industrial Control Equipment, certified for US and Canada. See UL File E65584. UL Listed for Class I, Division 2 Group A,B,C,D Hazardous Locations, certified for U.S. and Canada. See UL File E194810.
CE	European Union 2014/30/EU EMC Directive, compliant with: • EN 61326-1; Meas./Control/Lab., Industrial Requirements • EN 61000-6-2; Industrial Immunity • EN 61000-6-4; Industrial Emissions • EN 61131-2; Programmable Controllers (Clause 8, Zone A & B) European Union 2014/35/EU LVD, compliant with EN 61131-2; Programmable Controllers (Clause 11)
RCM	Australian Radiocommunications Act, compliant with EN 61000-6-4; Industrial Emissions
Ex	European Union 2014/34/EU ATEX Directive, compliant with: • EN IEC 60079-0: Explosive atmospheres - Part 0: Equipment - General requirements • EN IEC 60079-7: Explosive atmospheres – Part 7: Equipment protection by increased safety "e" • II 3 G Ex ec IIC T3 Gc • UL22ATEX2820X
IECEx	IECEx System, compliant with: • IEC 60079-0: Explosive atmospheres - Part 0: Equipment - General requirements • IEC 60079-7: Explosive atmospheres – Part 7: Equipment protection by increased safety "e" • II 3 G Ex ec IIC T3 Gc • IECEx UL 22.0065X
UKex	In conformity with the following UKex Statutory Instruments and their amendments: • Schedule 1 of the UKEX Regulation 2016 No. 1107 • Equipment protection by increased safety "e", reference certificate number UL22UKEX2602X • Zone 2 classification according to UKEX Regulation 2016 No. 1107
FM	FM Approved Equipment for use in Class I Division 2 Group A,B,C,D Hazardous Locations
KC	Korean Registration of Broadcasting and Communications Equipment, compliant with Article 58-2 of Radio Waves Act, Clause 3
UKCA	In conformity with the following UK Statutory Instruments and their amendments: • 2016 No. 1091, Electromagnetic Compatibility Regulations • 2016 No. 1101, Electrical Equipment (Safety) Regulations • 2016 No. 1107, Equipment and Protective Systems Intended for Use in Potentially Explosive Atmospheres Regulations • 2012 No. 3032, Restriction of the Use of Certain Hazardous Substances in Electrical and Electronic Equipment
Morocco	In conformity with the following regulations: • Arrêté ministériel n° 6404-15 du 1 er muharram 1437 (15 octobre 2015) Équipements électriques destinés à être utilisés sous certaines limites de tension • Arrêté ministériel n° 6404-15 du 29 ramadan 1436 (16 juillet 2015) Compatibilité électromagnétique des équipements
CCC	CCC 2020122309111998 CNCA-C23-01 强制性产品认证实施规则 防爆电气 CNCA-C23-01 CCC Implementation Rule Explosion-Proof Electrical Products

(1) When product is marked. See the Product Certification link at rok.auto/certifications for Declarations of Conformity, Certificates, and other certification details.

1756-IB16D, 1756-IB16DK

ControlLogix DC (10...30V) diagnostic input module

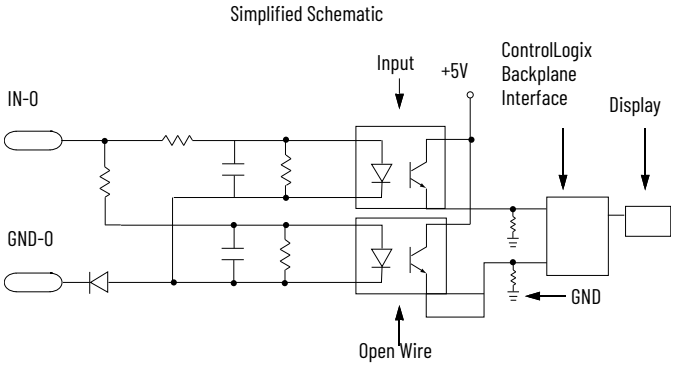

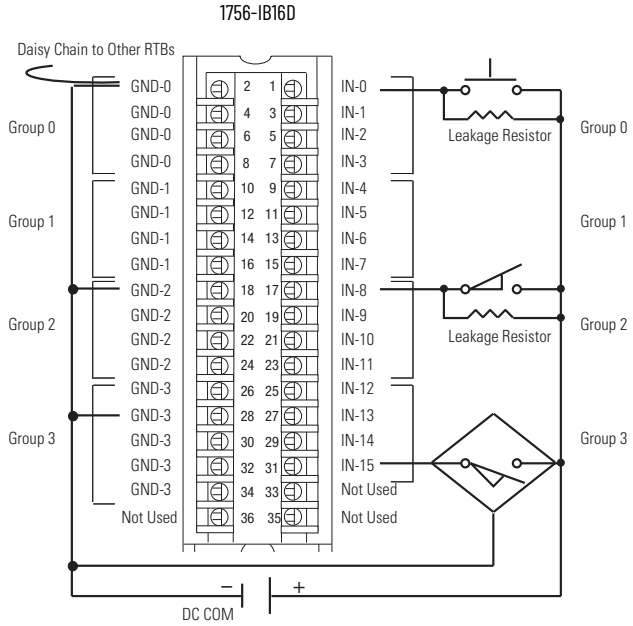

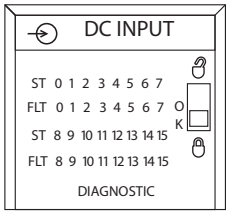

Recommended Leakage Resistor Size 1/4 W, 5%	Supply Voltage
3.9K	10V DC
5.6K	12V DC
15K	24V DC
20K	30V DC

Diagnostic Specifications

Attribute	1756-IB16D, 1756-IB16DK
Open wire	Off-state leakage current 1.2 mA min
Time stamp of diagnostics	±1 ms

Technical Specifications

Attribute	1756-IB16D, 1756-IB16DK
Inputs	16 diagnostic (4 points/group)
Voltage category	12/24V DC sink
Operating voltage range	10...30V DC
Input voltage, nom	24V DC
Input delay time (screw to backplane) Off to On On to Off	 Hardware delay: 340 µs nom/1 ms max + filter time User-selectable filter time: 0 ms, 1 ms, or 2 ms Hardware delay: 740 µs nom/4 ms max + filter time User-selectable filter time: 0 ms, 1 ms, 9 ms, or 18 ms
Current draw @ 5.1V	150 mA
Current draw @ 24V	3 mA
Total backplane power	0.84 W
Power dissipation, max	5.8 W @ 60 °C (140 °F)
Thermal dissipation	19.78 BTU/hr
Off-state voltage, max	5V
Off-state current, max	1.5 mA
On-state current, min	2 mA @ 10V DC
On-state current, max	13 mA @ 30V DC
Inrush current, max	250 mA
Input impedance, max	2.31 kΩ @ 30V DC
Cyclic update time	200 µs...750 ms
Change of state	Software configurable
Time stamp of inputs	±200 µs
Isolation voltage	250V (continuous), basic insulation type, inputs-to-backplane, and input group-to-group No isolation between individual group inputs
Module keying	Electronic, software configurable
Removable terminal block housing	1756-TBCH 1756-TBS6H
RTB keying	User-defined mechanical
Slot width	1
Wire category	1(1)
Enclosure type	None (open-style)
Temperature code	T3
Reverse polarity protection	Yes

(1) Use this conductor category information for planning conductor routing as described in the system-level installation manual. See the Industrial Automation Wiring and Grounding Guidelines, publication 1770-4.1.

Environmental Specifications

Attribute	1756-IB16D, 1756-IB16DK
Temperature, operating IEC 60068-2-1 (Test Ae, Operating Cold), IEC 60068-2-2 (Test Be, Operating Dry Heat), IEC 60068-2-14 (Test Nb, Operating Thermal Shock)	0...60 °C (32...140 °F)
Temperature, nonoperating IEC 60068-2-1 (Test Ab, Unpackaged Nonoperating Cold), IEC 60068-2-2 (Test Bb, Unpackaged Nonoperating Dry Heat), IEC 60068-2-14 (Test Na, Unpackaged Nonoperating Thermal Shock)	-40...+85 °C (-40...+185 °F)
Relative humidity IEC 60068-2-30 (Test dB, Unpackaged Damp Heat)	5...95% noncondensing
Vibration IEC 60068-2-6 (Test Fc, Operating)	2 g @ 10...500 Hz
Shock, operating IEC 60068-2-27 (Test Ea, Unpackaged Shock)	30 g
Shock, nonoperating IEC 60068-2-27 (Test Ea, Unpackaged Shock)	50 g
Emissions	IEC 61000-6-4
ESD immunity IEC 61000-4-2	6 kV contact discharges 8 kV air discharges
Radiated RF immunity IEC 61000-4-3	10V/m with 1 kHz sine wave 80% AM from 80...2000 MHz 10V/m with 200 Hz 50% Pulse 100% AM @ 900 MHz 10V/m with 200 Hz 50% Pulse 100% AM @ 1890 MHz 3V/m with 1 kHz sine wave 80% AM from 2000...2700 MHz
EFT/B immunity IEC 61000-4-4	±4 kV at 5 kHz on signal ports
Surge transient immunity IEC 61000-4-5	±1 kV line-line (DM) and ±2 kV line-earth (CM) on signal ports
Conducted RF immunity IEC 61000-4-6	10V rms with 1 kHz sine wave 80% AM from 150 kHz...80 MHz

Certifications

Certification[1]	1756-IB16D, 1756-IB16DK
cULus	UL Listed Industrial Control Equipment, certified for US and Canada. See UL File E65584. UL Listed for Class I, Division 2 Group A,B,C,D Hazardous Locations, certified for U.S. and Canada. See UL File E194810.
CE	European Union 2014/30/EU EMC Directive, compliant with: • EN 61326-1; Meas./Control/Lab., Industrial Requirements • EN 61000-6-2; Industrial Immunity • EN 61000-6-4; Industrial Emissions • EN 61131-2; Programmable Controllers (Clause 8, Zone A & B) European Union 2014/35/EU LVD, compliant with EN 61131-2; Programmable Controllers (Clause 11)
RCM	Australian Radiocommunications Act, compliant with EN 61000-6-4; Industrial Emissions
KC	Korean Registration of Broadcasting and Communications Equipment, compliant with Article 58-2 of Radio Waves Act, Clause 3
Ex	European Union 2014/34/EU ATEX Directive, compliant with: • EN IEC 60079-0: Explosive atmospheres - Part 0: Equipment - General requirements • EN IEC 60079-7: Explosive atmospheres – Part 7: Equipment protection by increased safety "e" • II 3 G Ex ec IIC T3 Gc • UL22ATEX2820X
IECEx	IECEx System, compliant with: • IEC 60079-0: Explosive atmospheres - Part 0: Equipment - General requirements • IEC 60079-7: Explosive atmospheres – Part 7: Equipment protection by increased safety "e" • II 3 G Ex ec IIC T3 Gc • IECEx UL 22.0065X
UKex	In conformity with the following UKex Statutory Instruments and their amendments: • Schedule 1 of the UKEX Regulation 2016 No. 1107 • Equipment protection by increased safety "e", reference certificate number UL22UKEX2602X • Zone 2 classification according to UKEX Regulation 2016 No. 1107
FM	FM Approved Equipment for use in Class I Division 2 Group A,B,C,D Hazardous Locations
UKCA	In conformity with the following UK Statutory Instruments and their amendments: • 2016 No. 1091, Electromagnetic Compatibility Regulations • 2016 No. 1101, Electrical Equipment (Safety) Regulations • 2016 No. 1107, Equipment and Protective Systems Intended for Use in Potentially Explosive Atmospheres Regulations • 2012 No. 3032, Restriction of the Use of Certain Hazardous Substances in Electrical and Electronic Equipment
Morocco	In conformity with the following regulations: • Arrêté ministériel n° 6404-15 du 1 er muharram 1437 (15 octobre 2015) Équipements électriques destinés à être utilisés sous certaines limites de tension • Arrêté ministériel n° 6404-15 du 29 ramadan 1436 (16 juillet 2015) Compatibilité électromagnétique des équipements
CCC	CCC 2020122309111998 CNCA-C23-01 强制性产品认证实施规则 防爆电气 CNCA-C23-01 CCC Implementation Rule Explosion-Proof Electrical Products

(1) When product is marked. See the Product Certification link at rok.auto/certifications for Declarations of Conformity, Certificates, and other certification details.

1756-IB16I, 1756-IB16IK

ControlLogix DC (10...30V) isolated input module

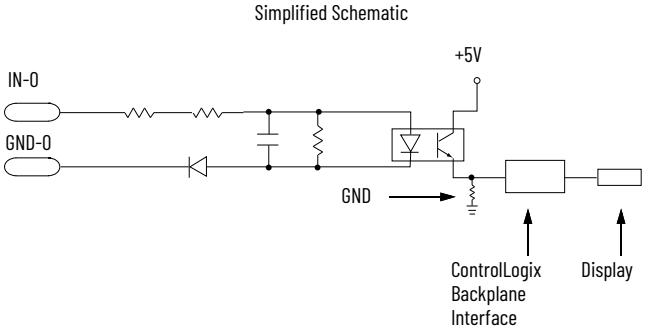

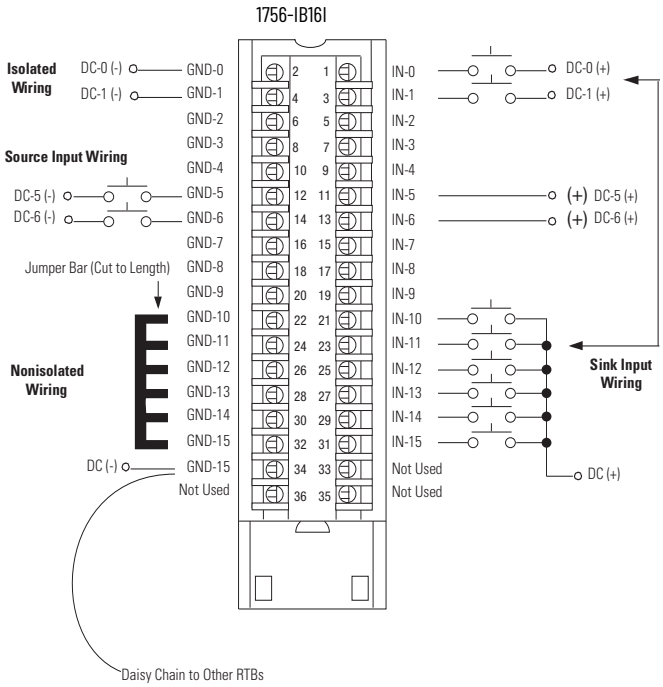

Additional jumper bars are available as catalog number 1756-JMPR.

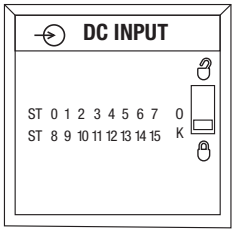

Technical Specifications

Attribute	1756-IB16I, 1756-IB16IK
Inputs	16 individually isolated
Voltage category	12/24V DC sink/source
Operating voltage range	10...30V DC
Input voltage, nom	24V DC
Input delay time (screw to backplane) Off to On On to Off	 Hardware delay: 1 ms max + filter time User-selectable filter time: 0 ms, 1 ms, or 2 ms Hardware delay: 4 ms max + filter time User-selectable filter time: 0 ms, 1 ms, 2 ms, 9 ms, or 18 ms
Current draw @ 5.1V	100 mA
Current draw @ 24V	3 mA
Total backplane power	0.58 W
Power dissipation, max	5 W @ 60 °C (140 °F)
Thermal dissipation	17.05 BTU/hr
Off-state voltage, max	5V
Off-state current, max	1.5 mA
On-state current, min	2 mA @ 10V DC
On-state current, max	10 mA @ 30V DC
Inrush current, max	250 mA peak (decaying to < 37% in 22 ms, without activation)
Input impedance, max	3 kΩ @ 30V DC
Cyclic update time	200 µs...750 ms
Change of stat	Software configurable
Time stamp of inputs	±200 µs
Isolation voltage	250V (continuous), basic insulation type, inputs-to-backplane, and input-to-input
Module keying	Electronic, software configurable
Removable terminal block housing	1756-TBCH 1756-TBS6H
RTB keying	User-defined mechanical
Slot width	1
Wire category	1(1)
Enclosure type	None (open-style)
Temperature code	T4
Reverse polarity protection	Yes

(1) Use this conductor category information for planning conductor routing as described in the system-level installation manual. See the Industrial Automation Wiring and Grounding Guidelines, publication 1770-4.1.

Environmental Specifications

Attribute	1756-IB16I, 1756-IB16IK
Temperature, operating IEC 60068-2-1 (Test Ae, Operating Cold), IEC 60068-2-2 (Test Be, Operating Dry Heat), IEC 60068-2-14 (Test Nb, Operating Thermal Shock)	0...60 °C (32...140 °F)
Temperature, nonoperating IEC 60068-2-1 (Test Ab, Unpackaged Nonoperating Cold), IEC 60068-2-2 (Test Bb, Unpackaged Nonoperating Dry Heat), IEC 60068-2-14 (Test Na, Unpackaged Nonoperating Thermal Shock)	-40...+85 °C (-40...+185 °F)
Relative humidity IEC 60068-2-30 (Test dB, Unpackaged Damp Heat)	5...95% noncondensing
Vibration IEC 60068-2-6 (Test Fc, Operating)	2 g @ 10...500 Hz
Shock, operating IEC 60068-2-27 (Test Ea, Unpackaged Shock)	30 g
Shock, nonoperating IEC 60068-2-27 (Test Ea, Unpackaged Shock)	50 g
Emissions	IEC 61000-6-4
ESD immunity IEC 61000-4-2	6 kV contact discharges 8 kV air discharges
Radiated RF immunity IEC 61000-4-3	10V/m with 1 kHz sine wave 80% AM from 80...2000 MHz 10V/m with 200 Hz 50% Pulse 100% AM @ 900 MHz 10V/m with 200 Hz 50% Pulse 100% AM @ 1890 MHz 3V/m with 1 kHz sine wave 80% AM from 2000...2700 MHz
EFT/B immunity IEC 61000-4-4	±4 kV at 5 kHz on signal ports
Surge transient immunity IEC 61000-4-5	±1 kV line-line (DM) and ±2 kV line-earth (CM) on signal ports
Conducted RF immunity IEC 61000-4-6	10V rms with 1 kHz sine wave 80% AM from 150 kHz...80 MHz

Certifications

Certification[1]	1756-IB16I, 1756-IB16IK
cULus	UL Listed Industrial Control Equipment, certified for US and Canada. See UL File E65584. UL Listed for Class I, Division 2 Group A,B,C,D Hazardous Locations, certified for U.S. and Canada. See UL File E194810.
CE	European Union 2014/30/EU EMC Directive, compliant with: • EN 61326-1; Meas./Control/Lab., Industrial Requirements • EN 61000-6-2; Industrial Immunity • EN 61000-6-4; Industrial Emissions • EN 61131-2; Programmable Controllers (Clause 8, Zone A & B) European Union 2014/35/EU LVD, compliant with EN 61131-2; Programmable Controllers (Clause 11)
RCM	Australian Radiocommunications Act, compliant with: EN 61000-6-4; Industrial Emissions
Ex	European Union 2014/34/EU ATEX Directive, compliant with: • EN IEC 60079-0: Explosive atmospheres - Part 0: Equipment - General requirements • EN IEC 60079-7: Explosive atmospheres – Part 7: Equipment protection by increased safety "e" • II 3 G Ex ec IIC T4 Gc • UL22ATEX2820X
IECEx	IECEx System, compliant with: • IEC 60079-0: Explosive atmospheres - Part 0: Equipment - General requirements • IEC 60079-7: Explosive atmospheres – Part 7: Equipment protection by increased safety "e" • II 3 G Ex ec IIC T4 Gc • IECEx UL 22.0065X
UKex	In conformity with the following UKex Statutory Instruments and their amendments: • Schedule 1 of the UKEX Regulation 2016 No. 1107 • Equipment protection by increased safety "e", reference certificate number UL22UKEX2602X • Zone 2 classification according to UKEX Regulation 2016 No. 1107
FM	FM Approved Equipment for use in Class I Division 2 Group A,B,C,D Hazardous Locations
KC	Korean Registration of Broadcasting and Communications Equipment, compliant with: Article 58-2 of Radio Waves Act, Clause 3
UKCA	In conformity with the following UK Statutory Instruments and their amendments: • 2016 No. 1091, Electromagnetic Compatibility Regulations • 2016 No. 1101, Electrical Equipment (Safety) Regulations • 2016 No. 1107, Equipment and Protective Systems Intended for Use in Potentially Explosive Atmospheres Regulations • 2012 No. 3032, Restriction of the Use of Certain Hazardous Substances in Electrical and Electronic Equipment
Morocco	In conformity with the following regulations: • Arrêté ministériel n° 6404-15 du 1 er muharram 1437 (15 octobre 2015) Équipements électriques destinés à être utilisés sous certaines limites de tension • Arrêté ministériel n° 6404-15 du 29 ramadan 1436 (16 juillet 2015) Compatibilité électromagnétique des équipements
CCC	CCC 2020122309111998 CNCA-C23-01 强制性产品认证实施规则 防爆电气 CNCA-C23-01 CCC Implementation Rule Explosion-Proof Electrical Products

(1) When product is marked. See the Product Certification link at rok.auto/certifications for Declarations of Conformity, Certificates, and other certification details.

1756-IB16IF, 1756-IB16IFK

ControlLogix DC (10...30V) sinking or sourcing, isolated, fast input module

Simplified Schematic

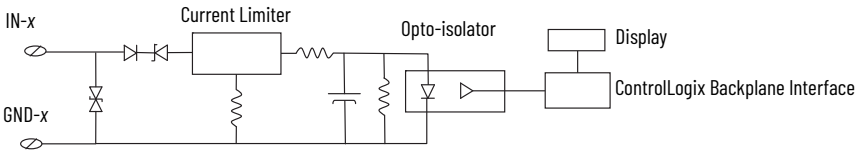

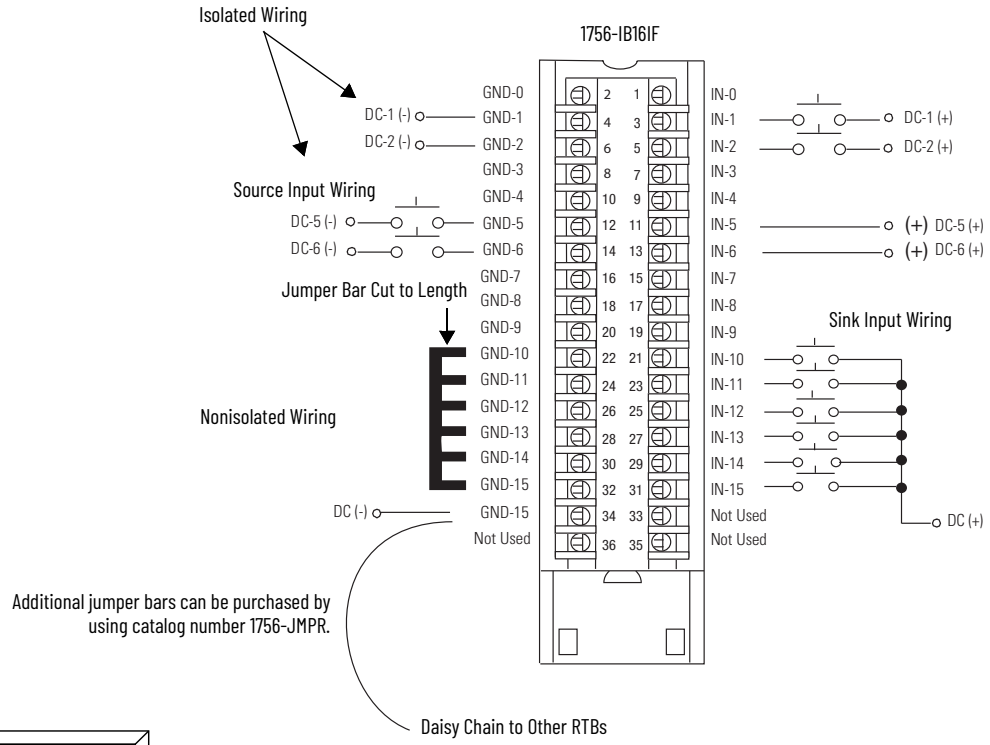

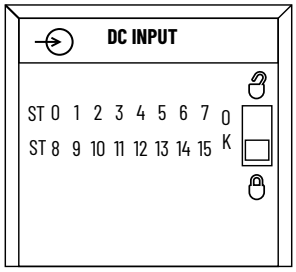

Technical Specifications

Attribute	1756-IB16IF, 1756-IB16IFK
Inputs	16 individually isolated
Voltage category	12/24V DC sink/source
Operating voltage range	10...30V DC
Input voltage, nom	24V DC
Input delay time (screw to backplane) Off to On On to Off	 14 µs nom/23 µs max + user-configurable filter time of 0...30,000 µs 14 µs nom/23 µs max + user-configurable filter time of 0...30,000 µs
Current draw @ 5.1V	275 mA
Current draw @ 24V	3 mA
Total backplane power	1.47 W
Power dissipation	3.8 W @ 60 °C (140 °F)
Thermal dissipation	12.97 BTU/hr
Off-state voltage, max	5V
Off-state current, max	1.5 mA
On-state current, min	2 mA @ 10V DC
On-state current, max	5 mA @ 30V DC
Input impedance, max	6 kΩ @ 30V DC
Cyclic update time	200 µs...750 ms
Change of state	Software configurable
Time stamp of inputs	± 4 µs for inputs < 4 kHz ± 13 µs for inputs > 4 kHz
Isolation voltage	250V (continuous), reinforced insulation type, inputs-to-backplane 250V (continuous), basic insulation type, input-to-input
Module keying	Electronic, software configurable
Removable terminal block housing	1756-TBCH 1756-TBS6H
RTB keying	User-defined mechanical
Slot width	1
Wire category	1 on signal ports(1)
Enclosure type	None (open-style)
Temperature code	T4
Reverse polarity protection	Yes

(1) Use this conductor category information for planning conductor routing as described in the system-level installation manual. See the Industrial Automation Wiring and Grounding Guidelines, publication 1770-4.1.

Environmental Specifications

Attribute	1756-IB16IF, 1756-IB16IFK
Temperature, operating IEC 60068-2-1 (Test Ae, Operating Cold), IEC 60068-2-2 (Test Be, Operating Dry Heat), IEC 60068-2-14 (Test Nb, Operating Thermal Shock)	0...60 °C (32...140 °F)
Temperature, nonoperating IEC 60068-2-1 (Test Ab, Unpackaged Nonoperating Cold), IEC 60068-2-2 (Test Bb, Unpackaged Nonoperating Dry Heat), IEC 60068-2-14 (Test Na, Unpackaged Nonoperating Thermal Shock)	-40...+85 °C (-40...+185 °F)
Relative humidity IEC 60068-2-30 (Test dB, Unpackaged Damp Heat)	5...95% noncondensing
Vibration IEC 60068-2-6 (Test Fc, Operating)	2 g @ 10...500 Hz
Shock, operating IEC 60068-2-27 (Test Ea, Unpackaged Shock)	30 g
Shock, nonoperating IEC 60068-2-27 (Test Ea, Unpackaged Shock)	50 g
Emissions	IEC 61000-6-4
ESD immunity IEC 61000-4-2	6 kV contact discharges 8 kV air discharges
Radiated RF immunity IEC 61000-4-3	10V/m with 1 kHz sine wave 80% AM from 80...2000 MHz 10V/m with 200 Hz 50% Pulse 100% AM @ 900 MHz 10V/m with 200 Hz 50% Pulse 100% AM @ 1890 MHz 3V/m with 1 kHz sine wave 80% AM from 2000...2700 MHz
EFT/B immunity IEC 61000-4-4	±4 kV at 5 kHz on signal ports
Surge transient immunity IEC 61000-4-5	±1 kV line-line (DM) and ±2 kV line-earth (CM) on signal ports
Conducted RF immunity IEC 61000-4-6	10V rms with 1 kHz sine wave 80% AM from 150 kHz...80 MHz

Certifications

Certification[1]	1756-IB16IF, 1756-IB16IFK
cULus	UL Listed Industrial Control Equipment, certified for US and Canada. See UL File E65584. UL Listed for Class I, Division 2 Group A,B,C,D Hazardous Locations, certified for U.S. and Canada. See UL File E194810.
CE	European Union 2014/30/EU EMC Directive, compliant with: • EN 61326-1; Meas./Control/Lab., Industrial Requirements • EN 61000-6-2; Industrial Immunity • EN 61000-6-4; Industrial Emissions • EN 61131-2; Programmable Controllers (Clause 8, Zone A & B) European Union 2014/35/EU LVD, compliant with EN 61131-2; Programmable Controllers (Clause 11)
RCM	Australian Radiocommunications Act, compliant with EN 61000-6-4; Industrial Emissions
Ex	European Union 2014/34/EU ATEX Directive, compliant with: • EN IEC 60079-0: Explosive atmospheres - Part 0: Equipment - General requirements • EN IEC 60079-7: Explosive atmospheres – Part 7: Equipment protection by increased safety "e" • II 3 G Ex ec IIC T4 Gc • UL22ATEX2820X
IECEx	IECEx System, compliant with: • IEC 60079-0: Explosive atmospheres - Part 0: Equipment - General requirements • IEC 60079-7: Explosive atmospheres – Part 7: Equipment protection by increased safety "e" • II 3 G Ex ec IIC T4 Gc • IECEx UL 22.0065X
UKex	In conformity with the following UKex Statutory Instruments and their amendments: • Schedule 1 of the UKEX Regulation 2016 No. 1107 • Equipment protection by increased safety "e", reference certificate number UL22UKEX2602X • Zone 2 classification according to UKEX Regulation 2016 No. 1107
KC	Korean Registration of Broadcasting and Communications Equipment, compliant with Article 58-2 of Radio Waves Act, Clause 3
UKCA	In conformity with the following UK Statutory Instruments and their amendments: • 2016 No. 1091, Electromagnetic Compatibility Regulations • 2016 No. 1101, Electrical Equipment (Safety) Regulations • 2016 No. 1107, Equipment and Protective Systems Intended for Use in Potentially Explosive Atmospheres Regulations • 2012 No. 3032, Restriction of the Use of Certain Hazardous Substances in Electrical and Electronic Equipment
Morocco	In conformity with the following regulations: • Arrêté ministériel n° 6404-15 du 1 er muharram 1437 (15 octobre 2015) Équipements électriques destinés à être utilisés sous certaines limites de tension • Arrêté ministériel n° 6404-15 du 29 ramadan 1436 (16 juillet 2015) Compatibilité électromagnétique des équipements
CCC	CCC 2020122309111998 CNCA-C23-01 强制性产品认证实施规则 防爆电气 CNCA-C23-01 CCC Implementation Rule Explosion-Proof Electrical Products

(1) When product is marked. See the Product Certification link at rok.auto/certifications for Declarations of Conformity, Certificates, and other certification details.

1756-IB16ISOE, 1756-IB16ISOEK

ControlLogix DC (10...55V) sequence of events input module

Simplified Schematic

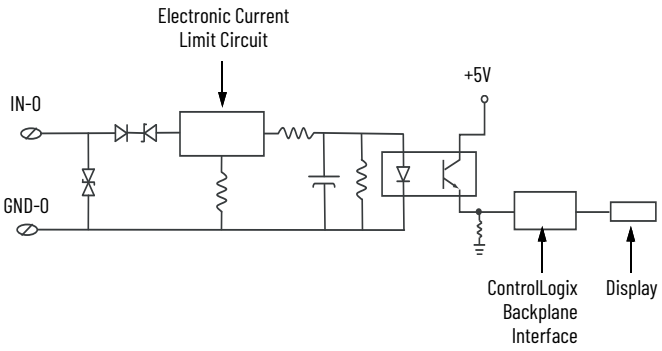

1756-IB16ISOE

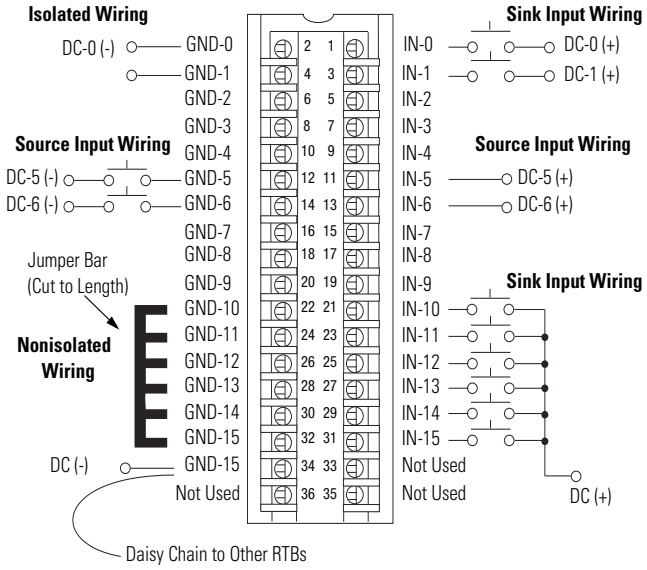

Additional jumper bars are available as catalog number 1756-JMPR.

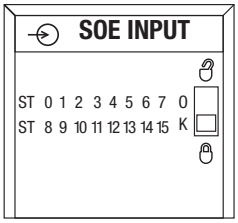

Technical Specifications

Attribute	1756-IB16ISOE, 1756-IB16ISOEK
Inputs	16 individually isolated, sequence of events
Voltage category	24/48V DC sink/source
Operating voltage range	10...55V DC
Input voltage, nom	24V DC
Input delay time (screw to backplane) Off to On On to Off	 Hardware delay: 10 µs nom/20 µs max + firmware scan: up to 25 µs + filter time: 0...50 ms + ASIC delay: 175 µs (FIFO) or 625 µs (Coordinated System Time per point) Hardware delay: 25 µs nom/50 µs max + firmware scan: up to 25 µs + filter time: 0...50 ms + ASIC delay: 175 µs (FIFO) or 625 µs (Coordinated System Time per point)
Current draw @ 5.1V	320 mA
Current draw @ 24V	2 mA
Total backplane power	1.7 W
Power dissipation, max	5.5 W @ 60 °C (140 °F)
Thermal dissipation	17.22 BTU/hr
Off-state voltage, max	5V
Off-state current, max	1.5 mA
On-state current, min	2.0 mA @ 9V DC
On-state current, nom	4.5 mA @ 24...31V DC
On-state current, max	5.1 mA @ 48...55V DC
Input impedance, max	10.8 kΩ @ 55V DC
Cyclic update time	200 µs...750 ms
Change of state	Software configurable
Time stamp of inputs	±100 µs
Isolation voltage	250V (continuous), basic(1) insulation type, outputs to backplane. 125V (continuous), basic insulation type, outputs group to group. No isolation between individual outputs.
Module keying	Electronic, software configurable
Removable terminal block	1756-TBCH 1756-TBS6H
RTB keying	User-defined mechanical
Slot width	1
Wire category	1(2)
Enclosure type	None (open-style)
Temperature code	T4
Reverse polarity protection	Yes

(1) Per IEC 61010-1 terminology, the insulation type is basic. Per older UL508 terminology, the insulation type is reinforced.
(2) Use this conductor category information for planning conductor routing as described in the system-level installation manual. See the Industrial Automation Wiring and Grounding Guidelines, publication 1770-4.1.

Environmental Specifications

Attribute	1756-IB16ISOE, 1756-IB16ISOEK
Temperature, operating IEC 60068-2-1 (Test Ae, Operating Cold), IEC 60068-2-2 (Test Be, Operating Dry Heat), IEC 60068-2-14 (Test Nb, Operating Thermal Shock)	0...60 °C (32...140 °F)
Temperature, nonoperating IEC 60068-2-1 (Test Ab, Unpackaged Nonoperating Cold), IEC 60068-2-2 (Test Bb, Unpackaged Nonoperating Dry Heat), IEC 60068-2-14 (Test Na, Unpackaged Nonoperating Thermal Shock)	-40...+85 °C (-40...+185 °F)
Relative humidity IEC 60068-2-30 (Test dB, Unpackaged Damp Heat)	5...95% noncondensing
Vibration IEC 60068-2-6 (Test Fc, Operating)	2 g @ 10...500 Hz
Shock, operating IEC 60068-2-27 (Test Ea, Unpackaged Shock)	30 g
Shock, nonoperating IEC 60068-2-27 (Test Ea, Unpackaged Shock)	50 g
Emissions	IEC 61000-6-4
ESD immunity IEC 61000-4-2	6 kV contact discharges 8 kV air discharges
Radiated RF immunity IEC 61000-4-3	10V/m with 1 kHz sine wave 80% AM from 80...2000 MHz 10V/m with 200 Hz 50% Pulse 100% AM @ 900 MHz 10V/m with 200 Hz 50% Pulse 100% AM @ 1890 MHz 3V/m with 1 kHz sine wave 80% AM from 2000...2700 MHz
EFT/B immunity IEC 61000-4-4	±4 kV at 5 kHz on signal ports
Surge transient immunity IEC 61000-4-5	±1 kV line-line (DM) and ±2 kV line-earth (CM) on signal ports
Conducted RF immunity IEC 61000-4-6	10V rms with 1 kHz sine wave 80% AM from 150 kHz...80 MHz

Certifications

Certification[1]	1756-IB16ISOE, 1756-IB16ISOEK
cULus	UL Listed Industrial Control Equipment, certified for US and Canada. See UL File E65584. UL Listed for Class I, Division 2 Group A,B,C,D Hazardous Locations, certified for U.S. and Canada. See UL File E194810.
CE	European Union 2014/30/EU EMC Directive, compliant with: • EN 61326-1; Meas./Control/Lab., Industrial Requirements • EN 61000-6-2; Industrial Immunity • EN 61000-6-4; Industrial Emissions • EN 61131-2; Programmable Controllers (Clause 8, Zone A & B) European Union 2014/35/EU LVD, compliant with EN 61131-2; Programmable Controllers (Clause 11)
RCM	Australian Radiocommunications Act, compliant with EN 61000-6-4; Industrial Emissions
Ex	European Union 2014/34/EU ATEX Directive, compliant with: • EN IEC 60079-0: Explosive atmospheres - Part 0: Equipment - General requirements • EN IEC 60079-7: Explosive atmospheres – Part 7: Equipment protection by increased safety "e" • II 3 G Ex ec IIC T4 Gc • UL22ATEX2820X
IECEx	IECEx System, compliant with: • IEC 60079-0: Explosive atmospheres - Part 0: Equipment - General requirements • IEC 60079-7: Explosive atmospheres – Part 7: Equipment protection by increased safety "e" • II 3 G Ex ec IIC T4 Gc • IECEx UL 22.0065X
UKex	In conformity with the following UKex Statutory Instruments and their amendments: • Schedule 1 of the UKEX Regulation 2016 No. 1107 • Equipment protection by increased safety "e", reference certificate number UL22UKEX2602X • Zone 2 classification according to UKEX Regulation 2016 No. 1107
KC	Korean Registration of Broadcasting and Communications Equipment, compliant with Article 58-2 of Radio Waves Act, Clause 3
UKCA	In conformity with the following UK Statutory Instruments and their amendments: • 2016 No. 1091, Electromagnetic Compatibility Regulations • 2016 No. 1101, Electrical Equipment (Safety) Regulations • 2016 No. 1107, Equipment and Protective Systems Intended for Use in Potentially Explosive Atmospheres Regulations • 2012 No. 3032, Restriction of the Use of Certain Hazardous Substances in Electrical and Electronic Equipment
Morocco	In conformity with the following regulations: • Arrêté ministériel n° 6404-15 du 1 er muharram 1437 (15 octobre 2015) Équipements électriques destinés à être utilisés sous certaines limites de tension • Arrêté ministériel n° 6404-15 du 29 ramadan 1436 (16 juillet 2015) Compatibilité électromagnétique des équipements
CCC	CCC 2020122309111998 CNCA-C23-01 强制性产品认证实施规则 防爆电气 CNCA-C23-01 CCC Implementation Rule Explosion-Proof Electrical Products

(1) When product is marked. See the Product Certification link at rok.auto/certifications for Declarations of Conformity, Certificates, and other certification details.

1756-IB32, 1756-IB32K

ControlLogix DC (10...31.2V) input module

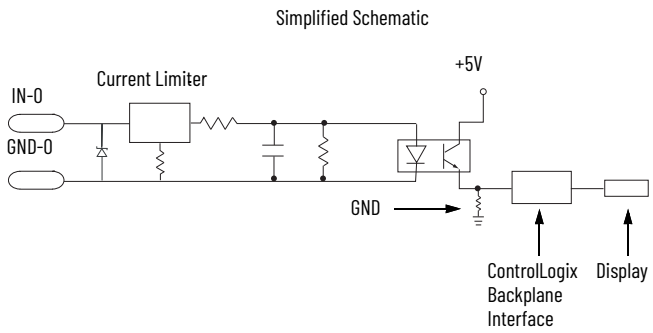

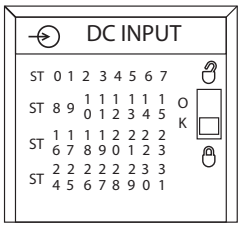

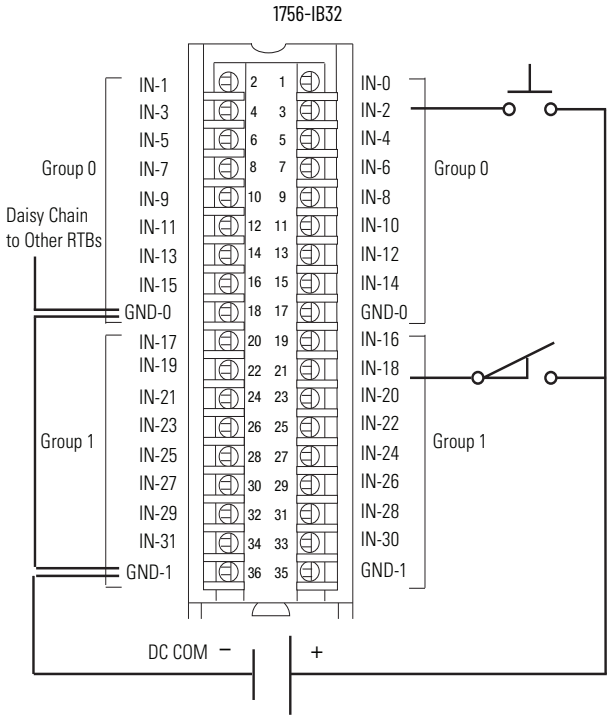

Technical Specifications

Attribute	1756-IB32, 1756-IB32K
Inputs	32 (16 points/group)
Voltage category	12/24V DC sink
Operating voltage range	10...31.2V DC
Input voltage, nom	24V DC
Input delay time (screw to backplane) Off to On On to Off	 Hardware delay: 380 µs max + filter time User-selectable filter time: 0 ms, 1 ms, or 2 ms Hardware delay: 420 µs max + filter time User-selectable filter time: 0 ms, 1 ms, 2 ms, 9 ms, or 18 ms
Current draw @ 5.1V	120 mA
Current draw @ 24V	2 mA
Total backplane power	0.66 W
Power dissipation, max	6.2 W @ 60 °C (140 °F)
Thermal dissipation	21.1 BTU/hr @ 60 °C (140 °F)
Off-state voltage, max	5V
Off-state current, max	2.27 mA
On-state current, min	4.8 mA @ 10V DC
On-state current, max	5.5 mA @ 31.2V DC
Inrush current, max	250 mA (decaying to < 37% in 22 ms, without activation)
Input impedance, max	5.67 kΩ @ 31.2V DC
Cyclic update time	200 µs...750 ms
Change of state	Software configurable
Time stamp of inputs	±200 µs
Isolation voltage	250V (continuous), reinforced insulation type, inputs-to-backplane 250V (continuous), basic insulation type, input group-to-group No isolation between individual group inputs
Module keying	Electronic, software configurable

Technical Specifications (Continued)

Attribute	1756-IB32, 1756-IB32K
Removable terminal block	1756-TBCH 1756-TBS6H
RTB keying	User-defined mechanical
Slot width	1
Wire category	1 - on signal ports(1)
Wire size	1756-TBCH
	Single wire connection: 0.33...2.1 mm^2 (22...14 AWG) solid or stranded copper wire rated at 105 °C (221 °F), or greater, 1.2 mm (3/64 in.) insulation max. Do not wire more than one conductor on any single terminal. Double wire connection: 0.33...1.3 mm^2 (22...16 AWG) solid or stranded copper wire rated at 105 °C (221 °F), or greater, 1.2 mm (3/64 in.) insulation max. Do not wire more than two conductors on any single terminal.
	1756-TBS6H
	Single wire connection: 0.33...2.1 mm^2 (22...14 AWG) solid or stranded shielded copper wire rated at 105 °C (221 °F), or greater, 1.2 mm (3/64 in.) insulation max.
Terminal block torque specs	1756-TBCH, 1756-TBCHXT 0.5 N•m (4.4 lb•in)
Enclosure type	None (open-style)
Temperature code	T4
Reverse polarity protection	Yes

(1) Use this conductor category information for planning conductor routing as described in the system-level installation manual. See the Industrial Automation Wiring and Grounding Guidelines, publication 1770-4.1.

Environmental Specifications

Attribute	1756-IB32, 1756-IB32K
Temperature, operating IEC 60068-2-1 (Test Ae, Operating Cold), IEC 60068-2-2 (Test Be, Operating Dry Heat), IEC 60068-2-14 (Test Nb, Operating Thermal Shock)	0...60 °C (32...140 °F)
Temperature, nonoperating IEC 60068-2-1 (Test Ab, Unpackaged Nonoperating Cold), IEC 60068-2-2 (Test Bb, Unpackaged Nonoperating Dry Heat), IEC 60068-2-14 (Test Na, Unpackaged Nonoperating Thermal Shock)	-40...+85 °C (-40...+185 °F)
Relative humidity IEC 60068-2-30 (Test dB, Unpackaged Damp Heat)	5...95% noncondensing
Conformal Coated(1)	Yes
Corrosive Atmosphere(1) • ASTM B845-97 Method H Accelerated Test (20-Day Exposure)	Severity Level G3(2) per ANSI/ISA 71.04-2013, Airborne Contaminants—Gases Severity Level CX(2)(3) per IEC 60721-3-3:2019, Chemically Active Substances
• ASTM B845-97 Method K Accelerated Test (30-Day Exposure) • Plus additional Rockwell Automation proprietary accelerated corrosive environment test protocol for specific industries with sources of gaseous sulfur compounds.	—
Vibration IEC 60068-2-6 (Test Fc, Operating)	2 g @ 10...500 Hz
Shock, operating IEC 60068-2-27 (Test Ea, Unpackaged Shock)	30 g
Shock, nonoperating IEC 60068-2-27 (Test Ea, Unpackaged Shock)	50 g
Emissions	IEC 61000-6-4
ESD immunity IEC 61000-4-2	6 kV contact discharges 8 kV air discharges
Radiated RF immunity IEC 61000-4-3	10V/m with 1 kHz sine wave 80% AM from 80...2000 MHz 10V/m with 200 Hz 50% Pulse 100% AM @ 900 MHz 10V/m with 200 Hz 50% Pulse 100% AM @ 1890 MHz 3V/m with 1 kHz sine wave 80% AM from 2000...2700 MHz

Environmental Specifications (Continued)

Attribute	1756-IB32, 1756-IB32K
EFT/B immunity IEC 61000-4-4	±4 kV at 5 kHz on signal ports
Surge transient immunity IEC 61000-4-5	±1 kV line-line (DM) and ±2 kV line-earth (CM) on signal ports
Conducted RF immunity IEC 61000-4-6	10V rms with 1 kHz sine wave 80% AM from 150 kHz...80 MHz

(1) Only applicable to modules that end with a 'K or 'XT'.
(2) The module and the corresponding RTB must remain installed at all times and the RTB door must remain closed, for the product to maintain its corrosive atmosphere rating.
(3) Up to 9.6 microns per year, corrosion rate of copper.

Certifications

Certification(1)	1756-IB32, 1756-IB32
cULus	UL Listed Industrial Control Equipment, certified for US and Canada. See UL File E65584. UL Listed for Class I, Division 2 Group A,B,C,D Hazardous Locations, certified for U.S. and Canada. See UL File E194810.
CE	European Union 2014/30/EU EMC Directive, compliant with: • EN 61326-1; Meas./Control/Lab., Industrial Requirements • EN 61000-6-2; Industrial Immunity • EN 61000-6-4; Industrial Emissions • EN 61131-2; Programmable Controllers (Clause 8, Zone A & B) European Union 2014/35/EU LVD, compliant with EN 61131-2; Programmable Controllers (Clause 11)
RCM	Australian Radiocommunications Act, compliant with EN 61000-6-4; Industrial Emissions
Ex	European Union 2014/34/EU ATEX Directive, compliant with: • EN IEC 60079-0: Explosive atmospheres - Part 0: Equipment - General requirements • EN IEC 60079-7: Explosive atmospheres – Part 7: Equipment protection by increased safety "e" • II 3 G Ex ec IIC T4 Gc • UL22ATEX2820X
IECEx	IECEx System, compliant with: • IEC 60079-0: Explosive atmospheres - Part 0: Equipment - General requirements • IEC 60079-7: Explosive atmospheres – Part 7: Equipment protection by increased safety "e" • II 3 G Ex ec IIC T4 Gc • IECEx UL 22.0065X
UKex	In conformity with the following UKex Statutory Instruments and their amendments: • Schedule 1 of the UKEX Regulation 2016 No. 1107 • Equipment protection by increased safety "e", reference certificate number UL22UKEX2602X • Zone 2 classification according to UKEX Regulation 2016 No. 1107
FM	FM Approved Equipment for use in Class I Division 2 Group A,B,C,D Hazardous Locations
KC	Korean Registration of Broadcasting and Communications Equipment, compliant with Article 58-2 of Radio Waves Act, Clause 3
UKCA	In conformity with the following UK Statutory Instruments and their amendments: • 2016 No. 1091, Electromagnetic Compatibility Regulations • 2016 No. 1101, Electrical Equipment (Safety) Regulations • 2016 No. 1107, Equipment and Protective Systems Intended for Use in Potentially Explosive Atmospheres Regulations • 2012 No. 3032, Restriction of the Use of Certain Hazardous Substances in Electrical and Electronic Equipment
Morocco	In conformity with the following regulations: • Arrêté ministériel n° 6404-15 du 1 er muharram 1437 (15 octobre 2015) Équipements électriques destinés à être utilisés sous certaines limites de tension • Arrêté ministériel n° 6404-15 du 29 ramadan 1436 (16 juillet 2015) Compatibilité électromagnétique des équipements
CCC	CCC 2020122309111998 CNCA-C23-01 强制性产品认证实施规则 防爆电气 CNCA-C23-01 CCC Implementation Rule Explosion-Proof Electrical Products

(1) When product is marked. See the Product Certification link at rok.auto/certifications for Declarations of Conformity, Certificates, and other certification details.

1756-IC16

ControlLogix DC (30...60V) input module

Simplified Schematic

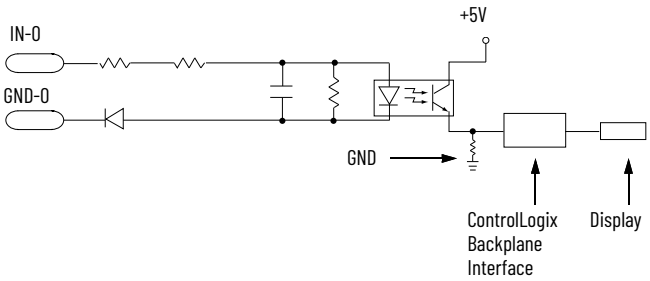

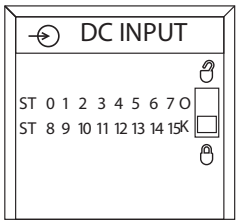

1756-IC16

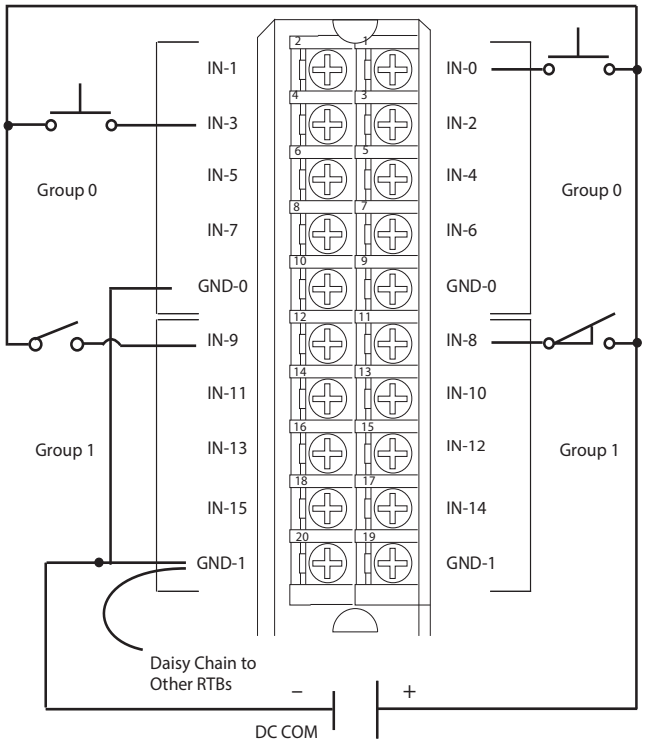

Technical Specifications

Attribute	1756-IC16
Inputs	16 (8 points/group)
Voltage category	48V DC sink
Operating voltage range	30...55V DC @ 60 °C (140 °F) 30...60V DC @ 55 °C (131 °F)
Input voltage, nom	48V DC
Input delay time (screw to backplane) Off to On On to Off	 Hardware delay: 1 ms max + filter time User-selectable filter time: 0 ms, 1 ms, or 2 ms Hardware delay: 4 ms max + filter time User-selectable filter time: 0 ms, 1 ms, 2 ms, 9 ms, or 18 ms
Current draw @ 5.1V	100 mA
Current draw @ 24V	3 mA
Total backplane power	0.58 W
Power dissipation, max	5.2 W @ 60 °C (140 °F)
Thermal dissipation	17.73 BTU/hr
Off-state voltage, max	10V
Off-state current, max	1.5 mA
On-state current, min	2 mA @ 30V DC
On-state current, max	7 mA @ 60V DC
Inrush current, max	250 mA
Input impedance, max	8.57 kΩ @ 60V DC
Cyclic update time	200 µs...750 ms
Change of state	Software configurable
Time stamp of inputs	±200 µs
Isolation voltage	250V (continuous), basic insulation type, inputs-to-backplane 125V (continuous), basic insulation type, input group-to-group No isolation between individual group inputs
Module keying	Electronic, software configurable
Removable terminal block housing	1756-TBNH 1756-TBSH
RTB keying	User-defined mechanical
Slot width	1
Wire category	1(1)
Enclosure type	None (open-style)
Temperature code	T4
Reverse polarity protection	Yes

(1) Use this conductor category information for planning conductor routing as described in the system-level installation manual. See the Industrial Automation Wiring and Grounding Guidelines, publication 1770-4.1.

Environmental Specifications

Attribute	1756-IC16
Temperature, operating IEC 60068-2-1 (Test Ae, Operating Cold), IEC 60068-2-2 (Test Be, Operating Dry Heat), IEC 60068-2-14 (Test Nb, Operating Thermal Shock)	0...60 °C (32...140 °F)
Temperature, nonoperating IEC 60068-2-1 (Test Ab, Unpackaged Nonoperating Cold), IEC 60068-2-2 (Test Bb, Unpackaged Nonoperating Dry Heat), IEC 60068-2-14 (Test Na, Unpackaged Nonoperating Thermal Shock)	-40...+85 °C (-40...+185 °F)
Relative humidity IEC 60068-2-30 (Test dB, Unpackaged Damp Heat)	5...95% noncondensing
Vibration IEC 60068-2-6 (Test Fc, Operating)	2 g @ 10...500 Hz
Shock, operating IEC 60068-2-27 (Test Ea, Unpackaged Shock)	30 g
Shock, nonoperating IEC 60068-2-27 (Test Ea, Unpackaged Shock)	50 g
Emissions	IEC 61000-6-4
ESD immunity IEC 61000-4-2	6 kV contact discharges 8 kV air discharges
Radiated RF immunity IEC 61000-4-3	10V/m with 1 kHz sine wave 80% AM from 80...2000 MHz 10V/m with 200 Hz 50% Pulse 100% AM @ 900 MHz 10V/m with 200 Hz 50% Pulse 100% AM @ 1890 MHz 3V/m with 1 kHz sine wave 80% AM from 2000...2700 MHz
EFT/B immunity IEC 61000-4-4	±4 kV at 5 kHz on signal ports
Surge transient immunity IEC 61000-4-5	±1 kV line-line (DM) and ± 2 kV line-earth (CM) on signal ports
Conducted RF immunity IEC 61000-4-6	10V rms with 1 kHz sine wave 80% AM from 150 kHz...80 MHz

Certifications

Certification[1]	1756-IC16
cULus	UL Listed Industrial Control Equipment, certified for US and Canada. See UL File E65584. UL Listed for Class I, Division 2 Group A,B,C,D Hazardous Locations, certified for U.S. and Canada. See UL File E194810.
CE	European Union 2014/30/EU EMC Directive, compliant with: • EN 61326-1; Meas./Control/Lab., Industrial Requirements • EN 61000-6-2; Industrial Immunity • EN 61000-6-4; Industrial Emissions • EN 61131-2; Programmable Controllers (Clause 8, Zone A & B) European Union 2014/35/EU LVD, compliant with EN 61131-2; Programmable Controllers (Clause 11)
RCM	Australian Radiocommunications Act, compliant with EN 61000-6-4; Industrial Emissions
Ex	European Union 2014/34/EU ATEX Directive, compliant with: • EN IEC 60079-0: Explosive atmospheres - Part 0: Equipment - General requirements • EN IEC 60079-7: Explosive atmospheres – Part 7: Equipment protection by increased safety "e" • II 3 G Ex ec IIC T4 Gc • UL22ATEX2820X
IECEx	IECEx System, compliant with: • IEC 60079-0: Explosive atmospheres - Part 0: Equipment - General requirements • IEC 60079-7: Explosive atmospheres – Part 7: Equipment protection by increased safety "e" • II 3 G Ex ec IIC T4 Gc • IECEx UL 22.0065X
UKex	In conformity with the following UKex Statutory Instruments and their amendments: • Schedule 1 of the UKEX Regulation 2016 No. 1107 • Equipment protection by increased safety "e", reference certificate number UL22UKEX2602X • Zone 2 classification according to UKEX Regulation 2016 No. 1107
FM	FM Approved Equipment for use in Class I Division 2 Group A,B,C,D Hazardous Locations
KC	Korean Registration of Broadcasting and Communications Equipment, compliant with Article 58-2 of Radio Waves Act, Clause 3
UKCA	In conformity with the following UK Statutory Instruments and their amendments: • 2016 No. 1091, Electromagnetic Compatibility Regulations • 2016 No. 1101, Electrical Equipment (Safety) Regulations • 2016 No. 1107, Equipment and Protective Systems Intended for Use in Potentially Explosive Atmospheres Regulations • 2012 No. 3032, Restriction of the Use of Certain Hazardous Substances in Electrical and Electronic Equipment
Morocco	In conformity with the following regulations: • Arrêté ministériel n° 6404-15 du 1 er muharram 1437 (15 octobre 2015) Équipements électriques destinés à être utilisés sous certaines limites de tension • Arrêté ministériel n° 6404-15 du 29 ramadan 1436 (16 juillet 2015) Compatibilité électromagnétique des équipements
CCC	CCC 2020122309111998 CNCA-C23-01 强制性产品认证实施规则 防爆电气 CNCA-C23-01 CCC Implementation Rule Explosion-Proof Electrical Products

(1) When product is marked. See the Product Certification link at rok.auto/certifications for Declarations of Conformity, Certificates, and other certification details.

1756-IG16, 1756-IG16K

ControlLogix TTL input module

Standard Wiring

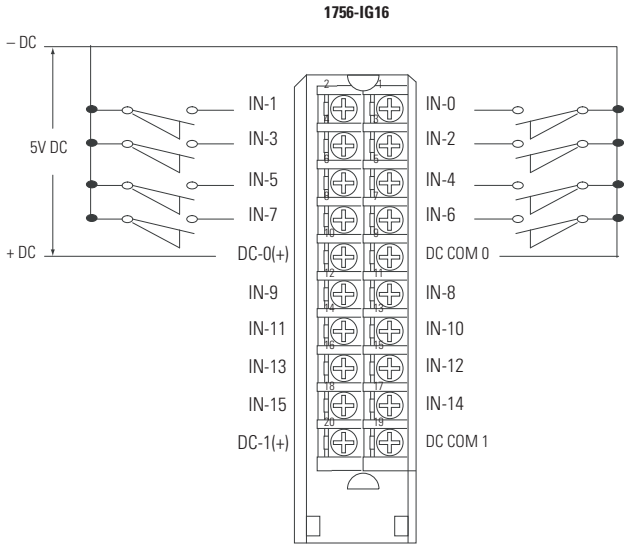

CE Compliant Wiring

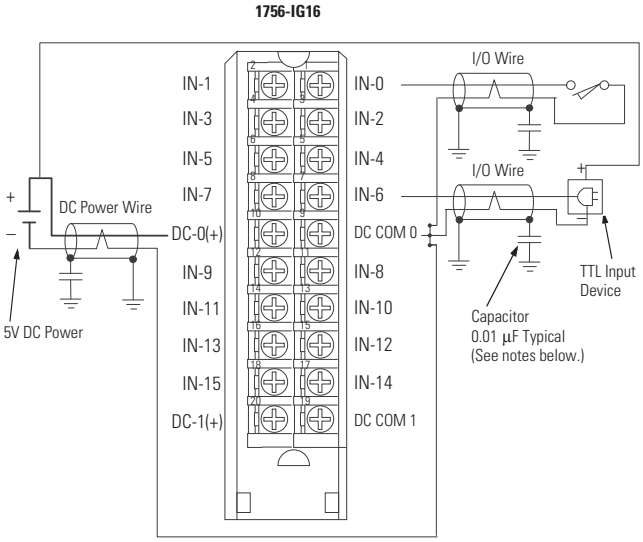

IMPORTANT: I/O cables must be shielded type and cable length must be <10 m (32.8 ft) for maximum EMI noise immunity.

Simplified Schematic

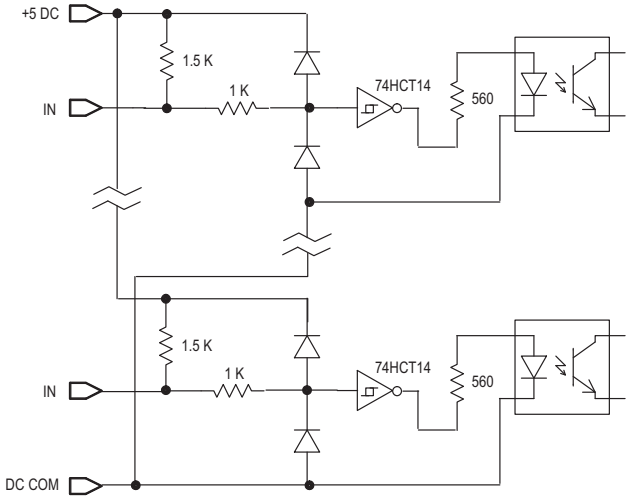

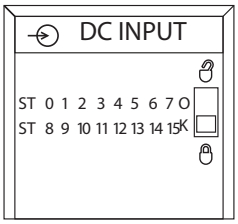

Low to True Format - 1756-IG16, 1756-IG16K

- -0.2...+0.8V = Input guaranteed to be in on-state
- 0.8...2.0V = Input state not guaranteed
- 2.0...5.5V = Input guaranteed to be in off-state

Technical Specifications

Attribute	1756-IG16, 1756-IG16K
Inputs	16 (8 points/group)
Voltage category	5V DC TTL source (Low=True)[1]
Operating voltage range	4.5...5.5V DC 50 mV P-P ripple max
Input delay time (screw to backplane) Off to On (5-to-0V DC transition) On to Off (0-to-5V DC transition)	 Hardware delay: 270 µs nom/450 µs max + filter time User-selectable filter time: 0 ms, 1 ms, or 2 ms Hardware delay: 390 µs nom/ 700 µs max + filter time User-selectable filter time: 0 ms, 1 ms, 2 ms, 9 ms, or 18 ms
Current draw @ 5.1V	110 mA
Current draw @ 24V	2 mA
Total backplane power	0.61 W
Power dissipation, max	1.4 W @ 60 °C (140 °F)
Thermal dissipation	4.8 BTU/hr @ 60 °C (140 °F)
Off-state voltage, max	2V
Off-state current, max	4.1 mA
Input impedance, max	1.4 kΩ min 1.5 kΩ typical
Input current, nom	3.7 mA @ 5V DC
Input current, max	4.1 mA @ 5V DC
Cyclic update time	200 µs...750 ms
Change of state	Software configurable
Time stamp of inputs	±200 µs
Isolation voltage	250V (continuous), basic insulation type, inputs-to-backplane, and input group-to-group No isolation between individual group inputs
Module keying	Electronic, software configurable
Removable terminal block housing	1756-TBNH 1756-TBSH
RTB keying	User-defined mechanical
Slot width	1
Wire category	2[2]
Enclosure type	None (open-style)
Temperature code	T4
Reverse polarity protection	No

(1) TTL inputs are inverted (-0.2 to +0.8 = low voltage = True = On.) Use a NOT instruction in your program to convert to traditional True - High logic.
(2) Use this conductor category information for planning conductor routing as described in the system-level installation manual. See the Industrial Automation Wiring and Grounding Guidelines, publication 1770-4.1.

Environmental Specifications

Attribute	1756-IG16, 1756-IG16K
Temperature, operating IEC 60068-2-1 (Test Ae, Operating Cold), IEC 60068-2-2 (Test Be, Operating Dry Heat), IEC 60068-2-14 (Test Nb, Operating Thermal Shock)	0...60 °C (32...140 °F)
Temperature, nonoperating IEC 60068-2-1 (Test Ab, Unpackaged Nonoperating Cold), IEC 60068-2-2 (Test Bb, Unpackaged Nonoperating Dry Heat), IEC 60068-2-14 (Test Na, Unpackaged Nonoperating Thermal Shock)	-40...+85 °C (-40...+185 °F)
Relative humidity IEC 60068-2-30 (Test dB, Unpackaged Damp Heat)	5...95% noncondensing
Vibration IEC 60068-2-6 (Test Fc, Operating)	2 g @ 10...500 Hz
Shock, operating IEC 60068-2-27 (Test Ea, Unpackaged Shock)	30 g
Shock, nonoperating IEC 60068-2-27 (Test Ea, Unpackaged Shock)	50 g
Emissions	IEC 61000-6-4
ESD immunity IEC 61000-4-2	6 kV contact discharges 8 kV air discharges
Radiated RF immunity IEC 61000-4-3	10V/m with 1 kHz sine wave 80% AM from 80...2000 MHz 10V/m with 200 Hz 50% Pulse 100% AM @ 900 MHz 10V/m with 200 Hz 50% Pulse 100% AM @ 1890 MHz 3V/m with 1 kHz sine wave 80% AM from 2000...2700 MHz
EFT/B immunity IEC 61000-4-4	±1 kV at 5 kHz on signal ports
Conducted RF immunity IEC 61000-4-6	10V rms with 1 kHz sine wave 80% AM from 150 kHz...80 MHz

Certifications

Certification[1]	1756-IG16, 1756-IG16K
cULus	UL Listed Industrial Control Equipment, certified for US and Canada. See UL File E65584. UL Listed for Class I, Division 2 Group A,B,C,D Hazardous Locations, certified for U.S. and Canada. See UL File E194810.
CE	European Union 2014/30/EU EMC Directive, compliant with: • EN 61326-1; Meas./Control/Lab., Industrial Requirements • EN 61000-6-2; Industrial Immunity • EN 61000-6-4; Industrial Emissions • EN 61131-2; Programmable Controllers (Clause 8, Zone A & B) European Union 2014/35/EU LVD, compliant with EN 61131-2; Programmable Controllers (Clause 11)
RCM	Australian Radiocommunications Act, compliant with EN 61000-6-4; Industrial Emissions
Ex	European Union 2014/34/EU ATEX Directive, compliant with: • EN IEC 60079-0: Explosive atmospheres - Part 0: Equipment - General requirements • EN IEC 60079-7: Explosive atmospheres – Part 7: Equipment protection by increased safety "e" • II 3 G Ex ec IIC T4 Gc • UL22ATEX2820X
IECEx	IECEx System, compliant with: • IEC 60079-0: Explosive atmospheres - Part 0: Equipment - General requirements • IEC 60079-7: Explosive atmospheres – Part 7: Equipment protection by increased safety "e" • II 3 G Ex ec IIC T4 Gc • IECEx UL 22.0065X
UKex	In conformity with the following UKex Statutory Instruments and their amendments: • Schedule 1 of the UKEX Regulation 2016 No. 1107 • Equipment protection by increased safety "e", reference certificate number UL22UKEX2602X • Zone 2 classification according to UKEX Regulation 2016 No. 1107
KC	Korean Registration of Broadcasting and Communications Equipment, compliant with Article 58-2 of Radio Waves Act, Clause 3
UKCA	In conformity with the following UK Statutory Instruments and their amendments: • 2016 No. 1091, Electromagnetic Compatibility Regulations • 2016 No. 1101, Electrical Equipment (Safety) Regulations • 2016 No. 1107, Equipment and Protective Systems Intended for Use in Potentially Explosive Atmospheres Regulations • 2012 No. 3032, Restriction of the Use of Certain Hazardous Substances in Electrical and Electronic Equipment
Morocco	In conformity with the following regulations: • Arrêté ministériel n° 6404-15 du 1 er muharram 1437 (15 octobre 2015) Équipements électriques destinés à être utilisés sous certaines limites de tension • Arrêté ministériel n° 6404-15 du 29 ramadan 1436 (16 juillet 2015) Compatibilité électromagnétique des équipements
CCC	CCC 2020122309111998 CNCA-C23-01 强制性产品认证实施规则 防爆电气 CNCA-C23-01 CCC Implementation Rule Explosion-Proof Electrical Products

(1) See the Product Certification link at rok.auto/certifications for Declarations of Conformity, Certificates, and other certification details.

1756-IH16I, 1756-IH16IK

ControlLogix 125V DC isolated input module

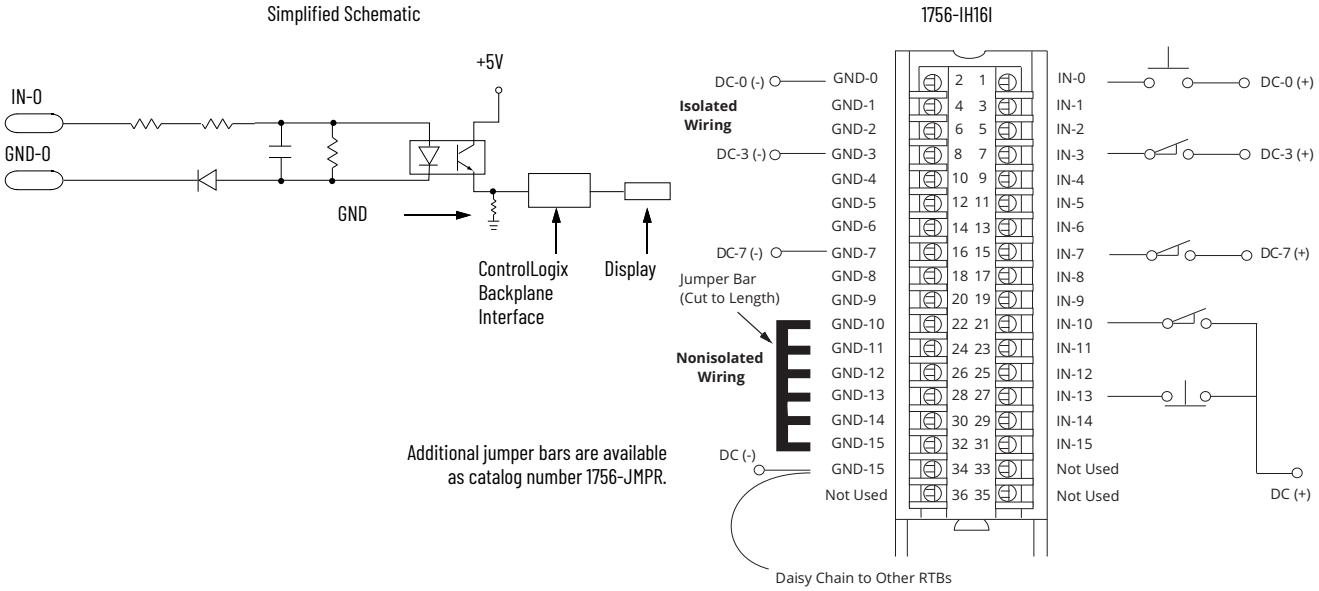

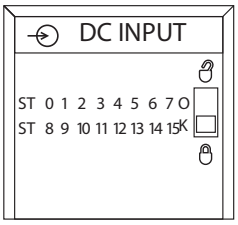

Technical Specifications

Attribute	1756-IH16I, 1756-IH16IK
Inputs	16 individually isolated
Voltage category	125V DC sink/source
Operating voltage range	90...146V DC(1)
Input voltage, nom	125V DC
Input delay time (screw to backplane) Off to On On to Off	 Hardware delay: 2 ms max + filter time User-selectable filter time: 0 ms, 1 ms, or 2 ms Hardware delay: 6 max + filter time User-selectable filter time: 0 ms, 1 ms, 2 ms, 9 ms, or 18 ms
Current draw @ 5.1V	125 mA
Current draw @ 24V	3 mA
Total backplane power	0.71 W
Power dissipation, max	5 W @ 60 °C (140 °F)
Thermal dissipation	17.05 BTU/hr
Off-state voltage, max	20V DC
Off-state current, max	0.8 mA
On-state current, min	1 mA @ 90V DC
On-state current, max	3 mA @ 146V DC
On-state voltage Derated as follows	90...146V DC 90...146V DC @ 50 °C (122 °F), 12 Channels ON 90...132V DC @ 55 °C (131 °F), 14 Channels ON 90...125V DC @ 60 °C (140 °F), 16 Channels ON 90...146V DC @ 30 °C (86 °F), 16 Channels ON
Inrush current, max	250 mA
Input impedance, max	48.67 kΩ @ 146V DC
Cyclic update time	200 µs...750 ms
Change of state	Software configurable
Time stamp of inputs	±200 µs
Isolation voltage	250V (continuous), basic insulation type, inputs-to-backplane, and input-to-input
Module keying	Electronic, software configurable
Removable terminal block housing	1756-TBCH 1756-TBS6H
RTB keying	User-defined mechanical
Slot width	1
Wire category	1(2)
Enclosure type	None (open-style)
North American temperature code	T4
Reverse polarity protection	Yes

(1) UL certification for 125V nominal. Rockwell Automation specified to the following:
90...146V DC @ 50 °C (122 °F),12 channels on
90...132V DC @ 55 °C (131 °F), 14 channels on
90...125V DC @ 60 °C (140 °F), 16 channels on
90...146V DC @ 30 °C (86 °F), 16 channels on.

(2) Use this conductor category information for planning conductor routing as described in the system-level installation manual. See the Industrial Automation Wiring and Grounding Guidelines, publication 1770-4.1.

Environmental Specifications

Attribute	1756-IH16I, 1756-IH16IK
Temperature, operating IEC 60068-2-1 (Test Ae, Operating Cold), IEC 60068-2-2 (Test Be, Operating Dry Heat), IEC 60068-2-14 (Test Nb, Operating Thermal Shock)	0...60 °C (32...140 °F)
Temperature, nonoperating IEC 60068-2-1 (Test Ab, Unpackaged Nonoperating Cold), IEC 60068-2-2 (Test Bb, Unpackaged Nonoperating Dry Heat), IEC 60068-2-14 (Test Na, Unpackaged Nonoperating Thermal Shock)	-40...+85 °C (-40...+185 °F)
Relative humidity IEC 60068-2-30 (Test dB, Unpackaged Damp Heat)	5...95% noncondensing
Vibration IEC 60068-2-6 (Test Fc, Operating)	2 g @ 10...500 Hz
Shock, operating IEC 60068-2-27 (Test Ea, Unpackaged Shock)	30 g
Shock, nonoperating IEC 60068-2-27 (Test Ea, Unpackaged Shock)	50 g
Emissions	IEC 61000-6-4
ESD immunity IEC 61000-4-2	6 kV contact discharges 8 kV air discharges
Radiated RF immunity IEC 61000-4-3	10V/m with 1 kHz sine wave 80% AM from 80...2000 MHz 10V/m with 200 Hz 50% Pulse 100% AM @ 900 MHz 10V/m with 200 Hz 50% Pulse 100% AM @ 1890 MHz 3V/m with 1 kHz sine wave 80% AM from 2000...2700 MHz
EFT/B immunity IEC 61000-4-4	±4 kV at 5 kHz on signal ports
Surge transient immunity IEC 61000-4-5	±1 kV line-line (DM) and ±2 kV line-earth (CM) on signal ports
Conducted RF immunity IEC 61000-4-6	10V rms with 1 kHz sine wave 80% AM from 150 kHz...80 MHz

Certifications

Certification(1)	1756-IH16I, 1756-IH16IK
cULus	UL Listed Industrial Control Equipment, certified for US and Canada. See UL File E65584. UL Listed for Class I, Division 2 Group A,B,C,D Hazardous Locations, certified for U.S. and Canada. See UL File E194810.
CE	European Union 2014/30/EU EMC Directive, compliant with: • EN 61326-1; Meas./Control/Lab., Industrial Requirements • EN 61000-6-2; Industrial Immunity • EN 61000-6-4; Industrial Emissions • EN 61131-2; Programmable Controllers (Clause 8, Zone A & B) European Union 2014/35/EU LVD, compliant with EN 61131-2; Programmable Controllers (Clause 11)
RCM	Australian Radiocommunications Act, compliant with EN 61000-6-4; Industrial Emissions
FM	FM Approved Equipment for use in Class I Division 2 Group A,B,C,D Hazardous Locations
KC	Korean Registration of Broadcasting and Communications Equipment, compliant with Article 58-2 of Radio Waves Act, Clause 3
UKCA	In conformity with the following UK Statutory Instruments and their amendments: • 2016 No. 1091, Electromagnetic Compatibility Regulations • 2016 No. 1101, Electrical Equipment (Safety) Regulations • 2016 No. 1107, Equipment and Protective Systems Intended for Use in Potentially Explosive Atmospheres Regulations • 2012 No. 3032, Restriction of the Use of Certain Hazardous Substances in Electrical and Electronic Equipment
Morocco	In conformity with the following regulations: • Arrêté ministériel n° 6404-15 du 1 er muharram 1437 (15 octobre 2015) Équipements électriques destinés à être utilisés sous certaines limites de tension • Arrêté ministériel n° 6404-15 du 29 ramadan 1436 (16 juillet 2015) Compatibilité électromagnétique des équipements

(1) When product is marked. See the Product Certification link at rok.auto/certifications for Declarations of Conformity, Certificates, and other certification details.

1756-IH16ISOE, 1756-IH16ISOEK

ControlLogix DC (90...140V) sequence of events input module

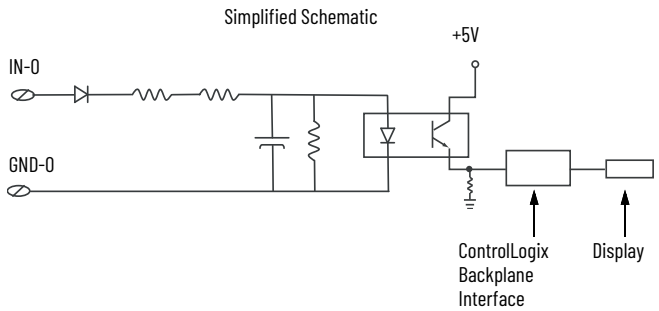

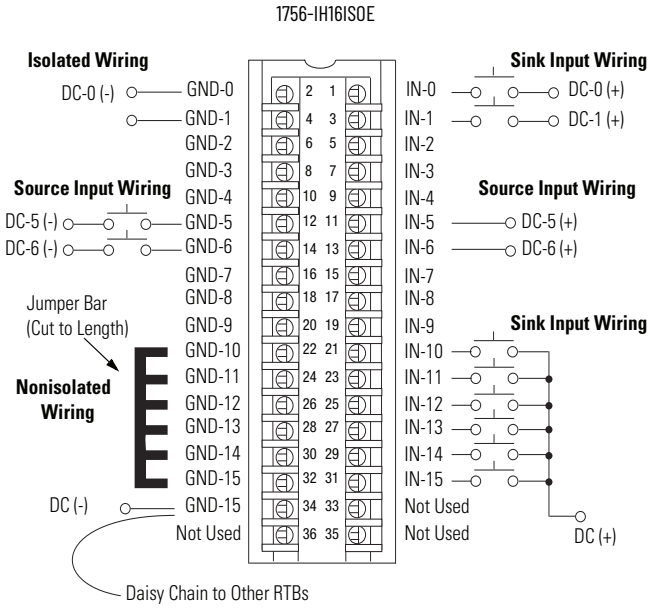

Additional jumper bars are available as catalog number 1756-JMPR.

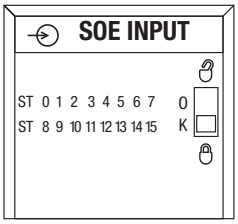

Technical Specifications

Attribute	1756-IH16ISOE, 1756-IH16ISOEK
Inputs	16 individually isolated, sequence of events
Voltage category	125V DC sink/source
Operating voltage range	90...140V DC
Input voltage, nom	125V DC
Input delay time (screw to backplane) Off to On On to Off	 Hardware delay: 10 µs nom/20 µs max + firmware scan: up to 25 µs + filter time: 0...50 ms + ASIC delay: 175 µs (FIFO) or 625 µs (Coordinated System Time per point) Hardware delay: 50 µs nom/75 µs max + firmware scan: up to 25 µs + filter time: 0...50 ms + ASIC delay: 175 µs (FIFO) or 625 µs (Coordinated System Time per point)
Current draw @ 5.1V	275 mA
Current draw @ 24V	2 mA
Total backplane power	1.5 W
Power dissipation, max	5.5 W @ 60 °C (140 °F)
Thermal dissipation	17.22 BTU/hr
Off-state voltage, max	20V
Off-state current, max	0.3 mA
On-state current, min	1.15 mA @ 90V DC
On-state current, max	1.85 mA @ 140V DC
Input impedance, max	74.8 kΩ
Cyclic update time	200 µs...750 ms
Change of state	Software configurable
Time stamp of inputs	±100 µs
Isolation voltage	250V (continuous), basic insulation type, inputs-to-backplane, and input-to-input
Module keying	Electronic, software configurable
Removable terminal block	1756-TBCH 1756-TBS6H
RTB keying	User-defined mechanical
Slot width	1
Wire category	1(1)
Enclosure type	None (open-style)
North American temperature code	T3C
Reverse polarity protection	Yes

(1) Use this conductor category information for planning conductor routing as described in the system-level installation manual. See the Industrial Automation Wiring and Grounding Guidelines, publication 1770-4.1.

Environmental Specifications

Attribute	1756-IH16ISOE, 1756-IH16ISOEK
Temperature, operating IEC 60068-2-1 (Test Ae, Operating Cold), IEC 60068-2-2 (Test Be, Operating Dry Heat), IEC 60068-2-14 (Test Nb, Operating Thermal Shock)	0...60 °C (32...140 °F)
Temperature, nonoperating IEC 60068-2-1 (Test Ab, Unpackaged Nonoperating Cold), IEC 60068-2-2 (Test Bb, Unpackaged Nonoperating Dry Heat), IEC 60068-2-14 (Test Na, Unpackaged Nonoperating Thermal Shock)	-40...+85 °C (-40...+185 °F)
Relative humidity IEC 60068-2-30 (Test dB, Unpackaged Damp Heat)	5...95% noncondensing
Vibration IEC 60068-2-6 (Test Fc, Operating)	2 g @ 10...500 Hz
Shock, operating IEC 60068-2-27 (Test Ea, Unpackaged Shock)	30 g
Shock, nonoperating IEC 60068-2-27 (Test Ea, Unpackaged Shock)	50 g
Emissions	IEC 61000-6-4
ESD immunity IEC 61000-4-2	6 kV contact discharges 8 kV air discharges
Radiated RF immunity IEC 61000-4-3	10V/m with 1 kHz sine wave 80% AM from 80...2000 MHz 10V/m with 200 Hz 50% Pulse 100% AM @ 900 MHz 10V/m with 200 Hz 50% Pulse 100% AM @ 1890 MHz 3V/m with 1 kHz sine wave 80% AM from 2000...2700 MHz
EFT/B immunity IEC 61000-4-4	±4 kV at 5 kHz on signal ports
Surge transient immunity IEC 61000-4-5	±1 kV line-line (DM) and ±2 kV line-earth (CM) on signal ports
Conducted RF immunity IEC 61000-4-6	10V rms with 1 kHz sine wave 80% AM from 150 kHz...80 MHz

Certifications

Certification(1)	1756-IH16ISOE, 1756-IH16ISOEK
cULus	UL Listed Industrial Control Equipment, certified for US and Canada. See UL File E65584. UL Listed for Class I, Division 2 Group A,B,C,D Hazardous Locations, certified for U.S. and Canada. See UL File E194810.
CE	European Union 2014/30/EU EMC Directive, compliant with: • EN 61326-1; Meas./Control/Lab., Industrial Requirements • EN 61000-6-2; Industrial Immunity • EN 61000-6-4; Industrial Emissions • EN 61131-2; Programmable Controllers (Clause 8, Zone A & B) European Union 2014/35/EU LVD, compliant with EN 61131-2; Programmable Controllers (Clause 11)
RCM	Australian Radiocommunications Act, compliant with EN 61000-6-4; Industrial Emissions
KC	Korean Registration of Broadcasting and Communications Equipment, compliant with Article 58-2 of Radio Waves Act, Clause 3
UKCA	In conformity with the following UK Statutory Instruments and their amendments: • 2016 No. 1091, Electromagnetic Compatibility Regulations • 2016 No. 1101, Electrical Equipment (Safety) Regulations • 2016 No. 1107, Equipment and Protective Systems Intended for Use in Potentially Explosive Atmospheres Regulations • 2012 No. 3032, Restriction of the Use of Certain Hazardous Substances in Electrical and Electronic Equipment
Morocco	In conformity with the following regulations: • Arrêté ministériel n° 6404-15 du 1 er muharram 1437 (15 octobre 2015) Équipements électriques destinés à être utilisés sous certaines limites de tension • Arrêté ministériel n° 6404-15 du 29 ramadan 1436 (16 juillet 2015) Compatibilité électromagnétique des équipements

(1) When product is marked. See the Product Certification link at rok.auto/certifications for Declarations of Conformity, Certificates, and other certification details.

1756-IV16, 1756-IV16K

ControlLogix DC (10...30V) sourcing input module

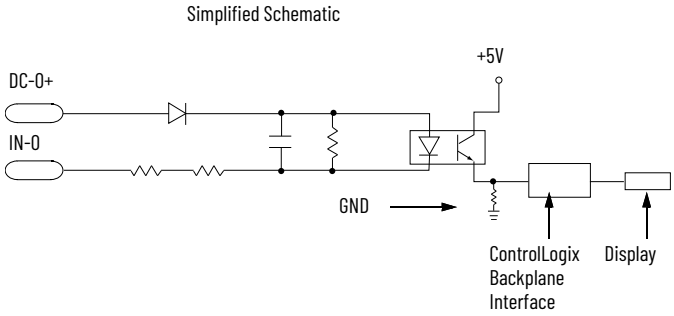

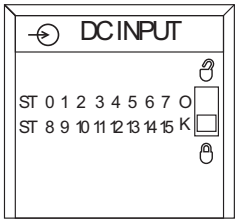

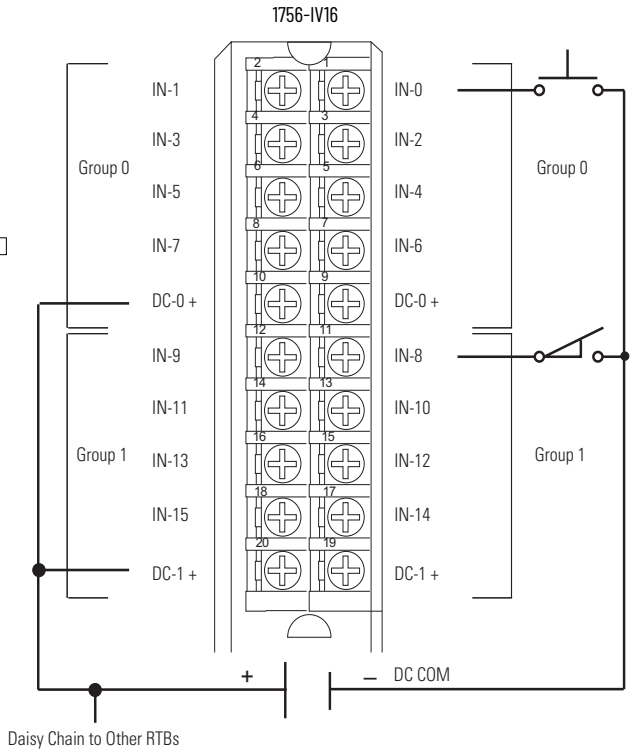

Technical Specifications

Attribute	1756-IV16, 1756-IV16K
Inputs	16 (8 points/group)
Voltage category	12/24V DC source
Operating voltage range	10...30V DC
Input voltage, nom	24V DC
Input delay time (screw to backplane) Off to On On to Off	 Hardware delay: 280 µs nom/1 ms max + filter time User-selectable filter time: 0 ms, 1 ms, or 2 ms Hardware delay: 540 µs nom/2 ms max + filter time User-selectable filter time: 0 ms, 1 ms, 2 ms, 9 ms, or 18 ms
Current draw @ 5.1V	110 mA
Current draw @ 24V	2 mA
Total backplane power	0.61 W
Power dissipation, max	5.41 W @ 60 °C (140 °F)
Thermal dissipation	18.47 BTU/hr
Off-state voltage, max	5V DC
Off-state current, max	1.5 mA
On-state current, min	2 mA @ 10V DC
On-state current, max	10 mA @ 30V DC
Inrush current, max	250 mA
Input impedance, max	3.2 kΩ @ 30V DC
Cyclic update time	200 µs...750 ms
Change of state	Software configurable
Time stamp of inputs	±200 µs
Isolation voltage	250V (continuous), basic insulation type, inputs-to-backplane, and input group-to-group No isolation between individual group inputs
Module keying	Electronic, software configurable
Removable terminal block housing	1756-TBNH 1756-TBSH
RTB keying	User-defined mechanical
Slot width	1
Wire category	1(1)
Enclosure type	None (open-style)
Temperature code	T4
Reverse polarity protection	Yes

(1) Use this conductor category information for planning conductor routing as described in the system-level installation manual. See the Industrial Automation Wiring and Grounding Guidelines, publication 1770-4.1.

Environmental Specifications

Attribute	1756-IV16, 1756-IV16K
Temperature, operating IEC 60068-2-1 (Test Ae, Operating Cold), IEC 60068-2-2 (Test Be, Operating Dry Heat), IEC 60068-2-14 (Test Nb, Operating Thermal Shock)	0...60 °C (32...140 °F)
Temperature, nonoperating IEC 60068-2-1 (Test Ab, Unpackaged Nonoperating Cold), IEC 60068-2-2 (Test Bb, Unpackaged Nonoperating Dry Heat), IEC 60068-2-14 (Test Na, Unpackaged Nonoperating Thermal Shock)	-40...+85 °C (-40...+185 °F)
Relative humidity IEC 60068-2-30 (Test dB, Unpackaged Damp Heat)	5...95% noncondensing
Vibration IEC 60068-2-6 (Test Fc, Operating)	2 g @ 10...500 Hz
Shock, operating IEC 60068-2-27 (Test Ea, Unpackaged Shock)	30 g
Shock, nonoperating IEC 60068-2-27 (Test Ea, Unpackaged Shock)	50 g
Emissions	IEC 61000-6-4
ESD immunity IEC 61000-4-2	6 kV contact discharges 8 kV air discharges
Radiated RF immunity IEC 61000-4-3	10V/m with 1 kHz sine wave 80% AM from 80...2000 MHz 10V/m with 200 Hz 50% Pulse 100% AM @ 900 MHz 10V/m with 200 Hz 50% Pulse 100% AM @ 1890 MHz 3V/m with 1 kHz sine wave 80% AM from 2000...2700 MHz
EFT/B immunity IEC 61000-4-4	±4 kV at 5 kHz on signal ports
Surge transient immunity IEC 61000-4-5	±1 kV line-line (DM) and ±2 kV line-earth (CM) on signal ports
Conducted RF immunity IEC 61000-4-6	10V rms with 1 kHz sine wave 80% AM from 150 kHz...80 MHz

Certifications

Certification[1]	1756-IV16, 1756-IV16K
cULus	UL Listed Industrial Control Equipment, certified for US and Canada. See UL File E65584. UL Listed for Class I, Division 2 Group A,B,C,D Hazardous Locations, certified for U.S. and Canada. See UL File E194810.
CE	European Union 2014/30/EU EMC Directive, compliant with: • EN 61326-1; Meas./Control/Lab., Industrial Requirements • EN 61000-6-2; Industrial Immunity • EN 61000-6-4; Industrial Emissions • EN 61131-2; Programmable Controllers (Clause 8, Zone A & B) European Union 2014/35/EU LVD, compliant with EN 61131-2; Programmable Controllers (Clause 11)
RCM	Australian Radiocommunications Act, compliant with EN 61000-6-4; Industrial Emissions
Ex	European Union 2014/34/EU ATEX Directive, compliant with: • EN IEC 60079-0: Explosive atmospheres - Part 0: Equipment - General requirements • EN IEC 60079-7: Explosive atmospheres – Part 7: Equipment protection by increased safety "e" • II 3 G Ex ec IIC T4 Gc • UL22ATEX2820X
IECEx	IECEx System, compliant with: • IEC 60079-0: Explosive atmospheres - Part 0: Equipment - General requirements • IEC 60079-7: Explosive atmospheres – Part 7: Equipment protection by increased safety "e" • II 3 G Ex ec IIC T4 Gc • IECEx UL 22.0065X
UKex	In conformity with the following UKex Statutory Instruments and their amendments: • Schedule 1 of the UKEX Regulation 2016 No. 1107 • Equipment protection by increased safety "e", reference certificate number UL22UKEX2602X • Zone 2 classification according to UKEX Regulation 2016 No. 1107
FM	FM Approved Equipment for use in Class I Division 2 Group A,B,C,D Hazardous Locations
KC	Korean Registration of Broadcasting and Communications Equipment, compliant with Article 58-2 of Radio Waves Act, Clause 3
UKCA	In conformity with the following UK Statutory Instruments and their amendments: • 2016 No. 1091, Electromagnetic Compatibility Regulations • 2016 No. 1101, Electrical Equipment (Safety) Regulations • 2016 No. 1107, Equipment and Protective Systems Intended for Use in Potentially Explosive Atmospheres Regulations • 2012 No. 3032, Restriction of the Use of Certain Hazardous Substances in Electrical and Electronic Equipment
Morocco	In conformity with the following regulations: • Arrêté ministériel n° 6404-15 du 1 er muharram 1437 (15 octobre 2015) Équipements électriques destinés à être utilisés sous certaines limites de tension • Arrêté ministériel n° 6404-15 du 29 ramadan 1436 (16 juillet 2015) Compatibilité électromagnétique des équipements
CCC	CCC 2020122309111998 CNCA-C23-01 强制性产品认证实施规则 防爆电气 CNCA-C23-01 CCC Implementation Rule Explosion-Proof Electrical Products

(1) When product is marked. See the Product Certification link at rok.auto/certifications for Declarations of Conformity, Certificates, and other certification details.

1756-IV32, 1756-IV32K

ControlLogix DC (10...30V) sourcing input module

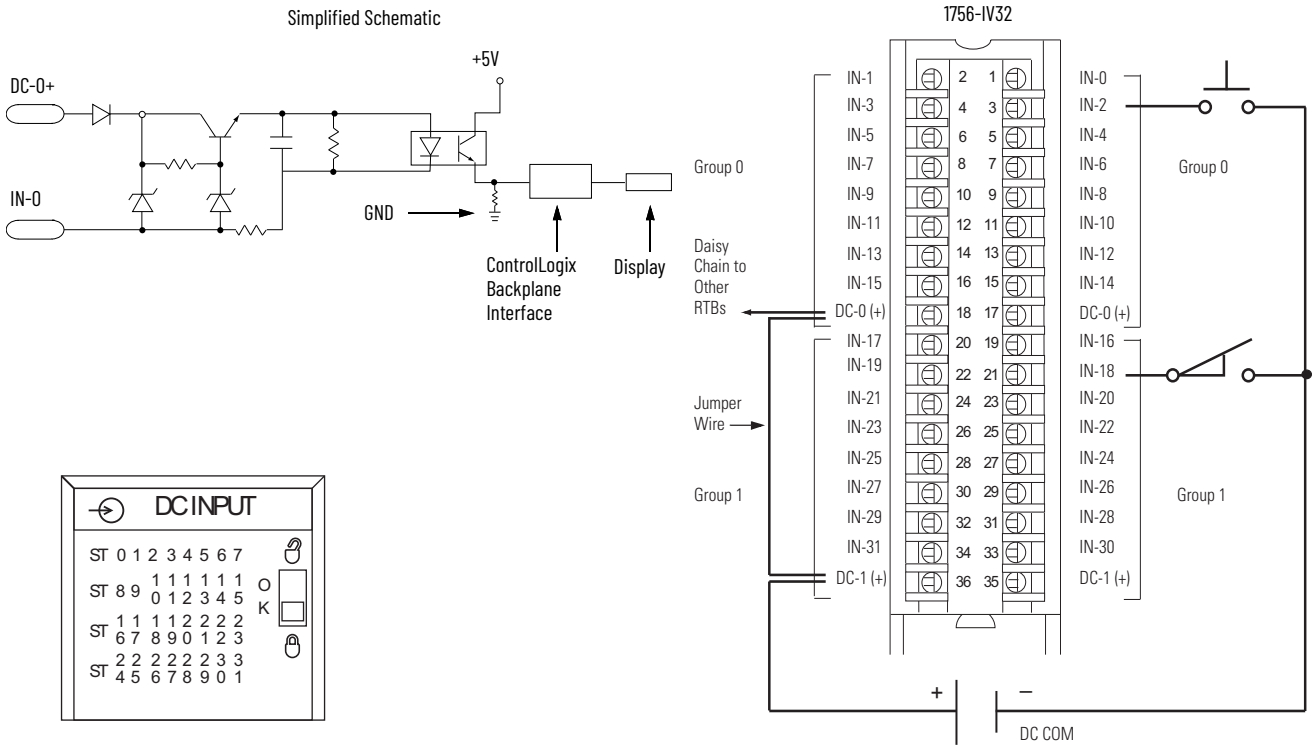

Technical Specifications

Attribute	1756-IV32, 1756-IV32K
Inputs	32 (16 points/group)
Voltage category	12/24V DC source
Operating voltage range	10...30V DC
Input voltage, nom	24V DC
Input delay time (screw to backplane) Off to On On to Off	 Hardware delay: 350 µs nom/1 ms max + filter time User-selectable filter time: 0 ms, 1 ms, or 2 ms Hardware delay: 540 µs nom/2 ms max + filter time User-selectable filter time: 0 ms, 1 ms, 2 ms, 9 ms, or 18 ms
Current draw @ 5.1V	120 mA
Current draw @ 24V	2 mA
Total backplane power	0.66 W
Power dissipation, max	4.1 W @ 60 °C (140 °F)
Thermal dissipation	14 BTU/hr @ 60 °C (140 °F)
Off-state voltage, max	5V
Off-state current, max	1.5 mA
On-state current, min	2 mA @ 10V DC
On-state current, max	3.5 mA @ 30V DC
Inrush current, max	250 mA (decaying to <37% in 22 ms, without activation)
Input impedance, max	8.6 kΩ @ 30V DC
Cyclic update time	200 µs...750 ms
Change of state	Software configurable
Time stamp of inputs	±200 µs
Isolation voltage	250V (continuous), basic insulation type, inputs-to-backplane, and input group-to-group No isolation between individual group inputs
Module keying	Electronic, software configurable
Removable terminal block	1756-TBCH 1756-TBS6H
RTB keying	User-defined mechanical
Slot width	1
Wire category	1 - on signal ports(1)
Enclosure type	None (open-style)
Temperature code	T4
Reverse polarity protection	Yes

(1) Use this conductor category information for planning conductor routing as described in the system-level installation manual. See the Industrial Automation Wiring and Grounding Guidelines, publication 1770-4.1.

Environmental Specifications

Attribute	1756-IV32, 1756-IV32K
Temperature, operating IEC 60068-2-1 (Test Ae, Operating Cold), IEC 60068-2-2 (Test Be, Operating Dry Heat), IEC 60068-2-14 (Test Nb, Operating Thermal Shock)	0...60 °C (32...140 °F)
Temperature, nonoperating IEC 60068-2-1 (Test Ab, Unpackaged Nonoperating Cold), IEC 60068-2-2 (Test Bb, Unpackaged Nonoperating Dry Heat), IEC 60068-2-14 (Test Na, Unpackaged Nonoperating Thermal Shock)	-40...+85 °C (-40...+185 °F)
Relative humidity IEC 60068-2-30 (Test dB, Unpackaged Damp Heat)	5...95% noncondensing
Vibration IEC 60068-2-6 (Test Fc, Operating)	2 g @ 10...500 Hz
Shock, operating IEC 60068-2-27 (Test Ea, Unpackaged Shock)	30 g
Shock, nonoperating IEC 60068-2-27 (Test Ea, Unpackaged Shock)	50 g
Emissions	IEC 61000-6-4
ESD immunity IEC 61000-4-2	6 kV contact discharges 8 kV air discharges
Radiated RF immunity IEC 61000-4-3	10V/m with 1k Hz sine wave 80% AM from 80...2000 MHz 10V/m with 200 Hz 50% Pulse 100% AM @ 900 MHz 10V/m with 200 Hz 50% Pulse 100% AM @ 1890 MHz 3V/m with 1 kHz sine wave 80% AM from 2000...2700 MHz
EFT/B immunity IEC 61000-4-4	±4 kV at 5 kHz on signal ports
Surge transient immunity IEC 61000-4-5	±1 kV line-line (DM) and ±2 kV line-earth (CM) on signal ports
Conducted RF immunity IEC 61000-4-6	10V rms with 1 kHz sine wave 80% AM from 150 kHz...80 MHz

Certifications

Certification[1]	1756-IV32, 1756-IV32K
cULus	UL Listed Industrial Control Equipment, certified for US and Canada. See UL File E65584. UL Listed for Class I, Division 2 Group A,B,C,D Hazardous Locations, certified for U.S. and Canada. See UL File E194810.
CE	European Union 2014/30/EU EMC Directive, compliant with: • EN 61326-1; Meas./Control/Lab., Industrial Requirements • EN 61000-6-2; Industrial Immunity • EN 61000-6-4; Industrial Emissions • EN 61131-2; Programmable Controllers (Clause 8, Zone A & B) European Union 2014/35/EU LVD, compliant with EN 61131-2; Programmable Controllers (Clause 11)
RCM	Australian Radiocommunications Act, compliant with EN 61000-6-4; Industrial Emissions
Ex	European Union 2014/34/EU ATEX Directive, compliant with: • EN IEC 60079-0: Explosive atmospheres - Part 0: Equipment - General requirements • EN IEC 60079-7: Explosive atmospheres – Part 7: Equipment protection by increased safety "e" • II 3 G Ex ec IIC T4 Gc • UL22ATEX2820X
IECEx	IECEx System, compliant with: • IEC 60079-0: Explosive atmospheres - Part 0: Equipment - General requirements • IEC 60079-7: Explosive atmospheres – Part 7: Equipment protection by increased safety "e" • II 3 G Ex ec IIC T4 Gc • IECEx UL 22.0065X
UKex	In conformity with the following UKex Statutory Instruments and their amendments: • Schedule 1 of the UKEX Regulation 2016 No. 1107 • Equipment protection by increased safety "e", reference certificate number UL22UKEX2602X • Zone 2 classification according to UKEX Regulation 2016 No. 1107
FM	FM Approved Equipment for use in Class I Division 2 Group A,B,C,D Hazardous Locations
KC	Korean Registration of Broadcasting and Communications Equipment, compliant with Article 58-2 of Radio Waves Act, Clause 3
UKCA	In conformity with the following UK Statutory Instruments and their amendments: • 2016 No. 1091, Electromagnetic Compatibility Regulations • 2016 No. 1101, Electrical Equipment (Safety) Regulations • 2016 No. 1107, Equipment and Protective Systems Intended for Use in Potentially Explosive Atmospheres Regulations • 2012 No. 3032, Restriction of the Use of Certain Hazardous Substances in Electrical and Electronic Equipment
Morocco	In conformity with the following regulations: • Arrêté ministériel n° 6404-15 du 1 er muharram 1437 (15 octobre 2015) Équipements électriques destinés à être utilisés sous certaines limites de tension • Arrêté ministériel n° 6404-15 du 29 ramadan 1436 (16 juillet 2015) Compatibilité électromagnétique des équipements
CCC	CCC 2020122309111998 CNCA-C23-01 强制性产品认证实施规则 防爆电气 CNCA-C23-01 CCC Implementation Rule Explosion-Proof Electrical Products

(1) When product is marked. See the Product Certification link at rok.auto/certifications for Declarations of Conformity, Certificates, and other certification details.

1756-OB8, 1756-OB8K

ControlLogix DC (10...30V) output module

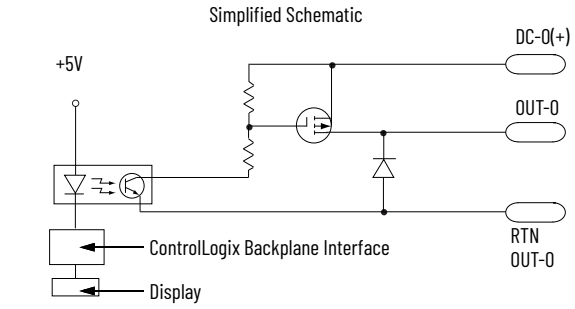

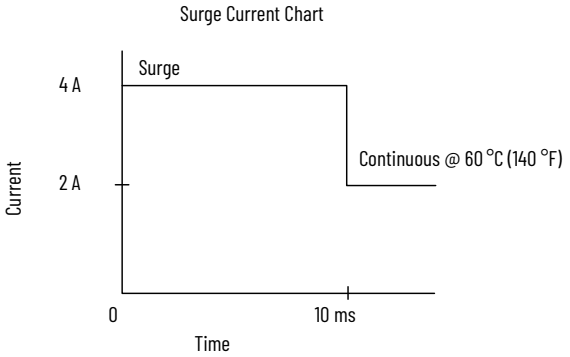

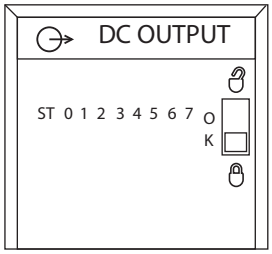

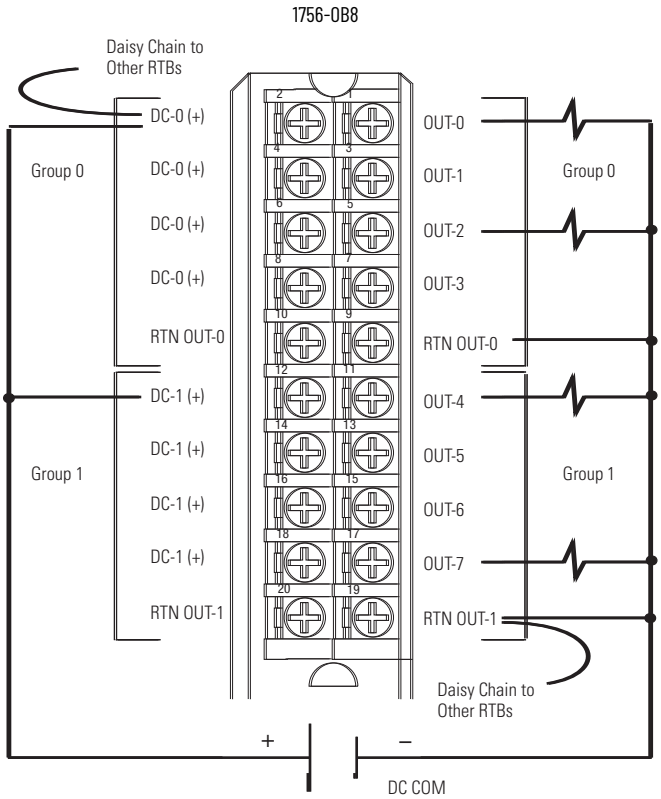

Technical Specifications

Attribute	1756-OB8, 1756-OB8K
Outputs	8 (4 points/common)
Pilot duty	Yes
Voltage category	12/24V DC source
Operating voltage range	10...30V DC
Output delay time Off to On On to Off	 1 ms max 2 ms max
Current draw @ 5.1V	165 mA
Current draw @ 24V	2 mA
Total backplane power	0.89 W
Power dissipation, max	2.5 W @ 60 °C (140 °F)
Thermal dissipation	8.53 BTU/hr
Off-state leakage current, max	1 mA per point
On-state voltage drop, max	1.2V DC @ 2 A
Current per point, max	2 A @ 60 °C (140 °F)
Current per module, max	8 A @ 60 °C (140 °F)
Surge current per point	4 A for 10 ms each, repeatable every 1 s @ 60 °C (140 °F)
Load current, min	2 mA per point
Scheduled outputs	Synchronization within 16.7 s max, reference to the Coordinated System Time
States in Fault mode per point	Hold last state, On or Off (Off is default)
States in Program mode per point	Hold last state, On or Off (Off is default)
Isolation voltage	250V (continuous), basic insulation type, outputs-to-backplane, and output group-to-group No isolation between individual group outputs
Module keying	Electronic, software configurable
Fusing	Not protected. A fused IFM is recommended to help protect outputs
Removable terminal block	1756-TBNH 1756-TBSH
RTB keying	User-defined mechanical
Slot width	1
Wire category	1(1)
Enclosure type	None (open-style)
Temperature code	T4

(1) Use this conductor category information for planning conductor routing as described in the system-level installation manual. See the Industrial Automation Wiring and Grounding Guidelines, publication 1770-4.1.

Environmental Specifications

Attribute	1756-OB8, 1756-OB8K
Temperature, operating IEC 60068-2-1 (Test Ae, Operating Cold), IEC 60068-2-2 (Test Be, Operating Dry Heat), IEC 60068-2-14 (Test Nb, Operating Thermal Shock)	0...60 °C (32...140 °F)
Temperature, nonoperating IEC 60068-2-1 (Test Ab, Unpackaged Nonoperating Cold), IEC 60068-2-2 (Test Bb, Unpackaged Nonoperating Dry Heat), IEC 60068-2-14 (Test Na, Unpackaged Nonoperating Thermal Shock)	-40...+85 °C (-40...+185 °F)
Relative humidity IEC 60068-2-30 (Test dB, Unpackaged Damp Heat)	5...95% noncondensing
Vibration IEC 60068-2-6 (Test Fc, Operating)	2 g @ 10...500 Hz
Shock, operating IEC 60068-2-27 (Test Ea, Unpackaged Shock)	30 g
Shock, nonoperating IEC 60068-2-27 (Test Ea, Unpackaged Shock)	50 g
Emissions	IEC 61000-6-4
ESD immunity IEC 61000-4-2	6 kV contact discharges 8 kV air discharges
Radiated RF immunity IEC 61000-4-3	10V/m with 1 kHz sine wave 80% AM from 80...2000 MHz 10V/m with 200 Hz 50% Pulse 100% AM @ 900 MHz 10V/m with 200 Hz 50% Pulse 100% AM @ 1890 MHz 3V/m with 1 kHz sine wave 80% AM from 2000...2700 MHz
EFT/B immunity IEC 61000-4-4	±4 kV at 5 kHz on signal ports
Surge transient immunity IEC 61000-4-5	±1 kV line-line (DM) and ±2 kV line-earth (CM) on signal ports
Conducted RF immunity IEC 61000-4-6	10V rms with 1 kHz sine wave 80% AM from 150 kHz...80 MHz

Certifications

Certification[1]	1756-OB8, 1756-OB8K
cULus	UL Listed Industrial Control Equipment, certified for US and Canada. See UL File E65584. UL Listed for Class I, Division 2 Group A,B,C,D Hazardous Locations, certified for U.S. and Canada. See UL File E194810.
CE	European Union 2014/30/EU EMC Directive, compliant with: • EN 61326-1; Meas./Control/Lab., Industrial Requirements • EN 61000-6-2; Industrial Immunity • EN 61000-6-4; Industrial Emissions • EN 61131-2; Programmable Controllers (Clause 8, Zone A & B) European Union 2014/35/EU LVD, compliant with EN 61131-2; Programmable Controllers (Clause 11)
RCM	Australian Radiocommunications Act, compliant with EN 61000-6-4; Industrial Emissions
Ex	European Union 2014/34/EU ATEX Directive, compliant with: • EN IEC 60079-0: Explosive atmospheres - Part 0: Equipment - General requirements • EN IEC 60079-7: Explosive atmospheres – Part 7: Equipment protection by increased safety "e" • II 3 G Ex ec IIC T4 Gc • UL22ATEX2820X
IECEx	IECEx System, compliant with: • IEC 60079-0: Explosive atmospheres - Part 0: Equipment - General requirements • IEC 60079-7: Explosive atmospheres – Part 7: Equipment protection by increased safety "e" • II 3 G Ex ec IIC T4 Gc • IECEx UL 22.0065X
UKex	In conformity with the following UKex Statutory Instruments and their amendments: • Schedule 1 of the UKEX Regulation 2016 No. 1107 • Equipment protection by increased safety "e", reference certificate number UL22UKEX2602X • Zone 2 classification according to UKEX Regulation 2016 No. 1107
FM	FM Approved Equipment for use in Class I Division 2 Group A,B,C,D Hazardous Locations
KC	Korean Registration of Broadcasting and Communications Equipment, compliant with Article 58-2 of Radio Waves Act, Clause 3
UKCA	In conformity with the following UK Statutory Instruments and their amendments: • 2016 No. 1091, Electromagnetic Compatibility Regulations • 2016 No. 1101, Electrical Equipment (Safety) Regulations • 2016 No. 1107, Equipment and Protective Systems Intended for Use in Potentially Explosive Atmospheres Regulations • 2012 No. 3032, Restriction of the Use of Certain Hazardous Substances in Electrical and Electronic Equipment
Morocco	In conformity with the following regulations: • Arrêté ministériel n° 6404-15 du 1 er muharram 1437 (15 octobre 2015) Équipements électriques destinés à être utilisés sous certaines limites de tension • Arrêté ministériel n° 6404-15 du 29 ramadan 1436 (16 juillet 2015) Compatibilité électromagnétique des équipements
CCC	CCC 2020122309111998 CNCA-C23-01 强制性产品认证实施规则 防爆电气 CNCA-C23-01 CCC Implementation Rule Explosion-Proof Electrical Products

(1) When product is marked. See the Product Certification link at rok.auto/certifications for Declarations of Conformity, Certificates, and other certification details.

1756-OB8EI, 1756-OB8EIK

ControlLogix DC (10...30V) electronically fused, isolated output module

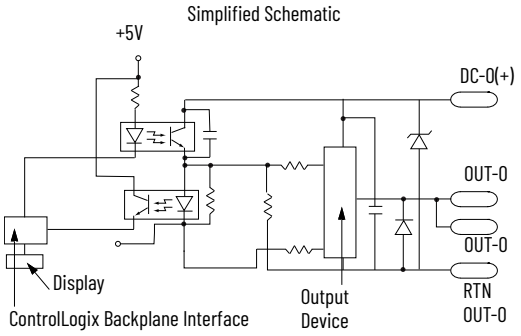

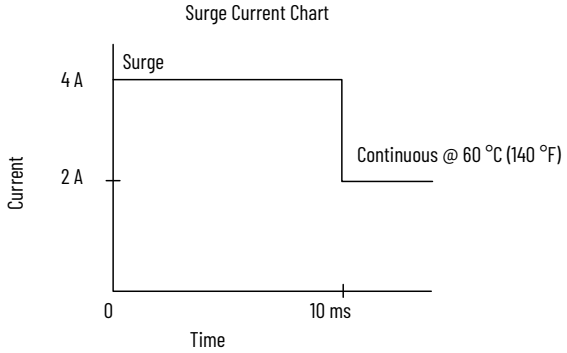

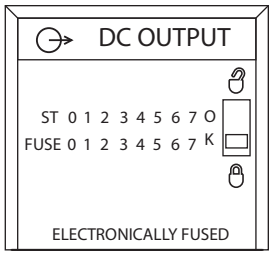

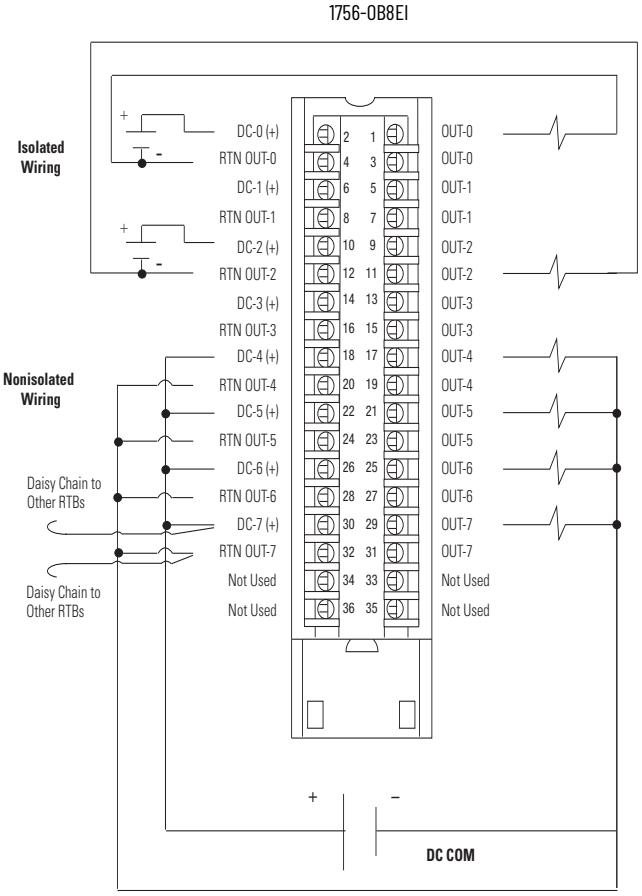

Diagnostic Specifications

Attribute	1756-OB8EI, 1756-OB8EIK
Short trip	> 4.5 A for 500 µs max (output on, then short) > 4.5 A for 1.5 ms max (output on into short)
Time stamp of diagnostics	±1 ms

Technical Specifications

Attribute	1756-OB8EI, 1756-OB8EIK
Outputs	8 individually isolated
Pilot duty	Yes
Voltage category	12/24V DC source
Operating voltage range	10...30V DC
Output delay time Off to On On to Off	 1 ms max 5 ms max
Current draw @ 5.1V	250 mA
Current draw @ 24V	2 mA
Total backplane power	1.30 W
Power dissipation, max	4.7 W @ 60 °C (140 °F)
Thermal dissipation	16.03 BTU/hr
Off-state leakage current, max	1 mA per point
On-state voltage drop, max	1.2V DC @ 2 A
Current per point, max	2 A @ 60 °C (140 °F)
Current per module, max	10 A @ 60 °C (140 °F) 16 A @ 55 °C (131 °F) linear derating
Surge current per point	4 A for 10 ms each, repeatable every 2 s
Load current, min	3 mA
Scheduled outputs	Synchronization within 16.7 s max, reference to the Coordinated System Time
States in Fault mode per point	Hold last state, On or Off (Off is default)
States in Program mode per point	Hold last state, On or Off (Off is default)
Isolation voltage	250V (continuous), basic insulation type, outputs-to-backplane, and output-to-output
Module keying	Electronic, software configurable
Fusing	Electronically fused per point
Removable terminal block	1756-TBCH 1756-TBS6H
RTB keying	User-defined mechanical
Slot width	1
Wire category	1(1)
Enclosure type	None (open-style)
Temperature code	T4

(1) Use this conductor category information for planning conductor routing as described in the system-level installation manual. See the Industrial Automation Wiring and Grounding Guidelines, publication 1770-4.1.

Environmental Specifications

Attribute	1756-OB8EI, 1756-OB8EIK
Temperature, operating IEC 60068-2-1 (Test Ae, Operating Cold), IEC 60068-2-2 (Test Be, Operating Dry Heat), IEC 60068-2-14 (Test Nb, Operating Thermal Shock)	0...60 °C (32...140 °F)
Temperature, nonoperating IEC 60068-2-1 (Test Ab, Unpackaged Nonoperating Cold), IEC 60068-2-2 (Test Bb, Unpackaged Nonoperating Dry Heat), IEC 60068-2-14 (Test Na, Unpackaged Nonoperating Thermal Shock)	-40...+85 °C (-40...+185 °F)
Relative humidity IEC 60068-2-30 (Test dB, Unpackaged Damp Heat)	5...95% noncondensing
Vibration IEC 60068-2-6 (Test Fc, Operating)	2 g @ 10...500 Hz
Shock, operating IEC 60068-2-27 (Test Ea, Unpackaged Shock)	30 g
Shock, nonoperating IEC 60068-2-27 (Test Ea, Unpackaged Shock)	50 g
Emissions	IEC 61000-6-4
ESD immunity IEC 61000-4-2	6 kV contact discharges 8 kV air discharges
Radiated RF immunity IEC 61000-4-3	10V/m with 1 kHz sine wave 80% AM from 80...2000 MHz 10V/m with 200 Hz 50% Pulse 100% AM @ 900 MHz 10V/m with 200 Hz 50% Pulse 100% AM @ 1890 MHz 3V/m with 1 kHz sine wave 80% AM from 2000...2700 MHz
EFT/B immunity IEC 61000-4-4	±4 kV at 5 kHz on signal ports
Surge transient immunity IEC 61000-4-5	±1 kV line-line (DM) and ±2 kV line-earth (CM) on signal ports
Conducted RF immunity IEC 61000-4-6	10V rms with 1 kHz sine wave 80% AM from 150 kHz...80 MHz

Certifications

Certification[1]	1756-OB8EI, 1756-OB8EIK
cULus	UL Listed Industrial Control Equipment, certified for US and Canada. See UL File E65584. UL Listed for Class I, Division 2 Group A,B,C,D Hazardous Locations, certified for U.S. and Canada. See UL File E194810.
CE	European Union 2014/30/EU EMC Directive, compliant with: • EN 61326-1; Meas./Control/Lab., Industrial Requirements • EN 61000-6-2; Industrial Immunity • EN 61000-6-4; Industrial Emissions • EN 61131-2; Programmable Controllers (Clause 8, Zone A & B) European Union 2014/35/EU LVD, compliant with EN 61131-2; Programmable Controllers (Clause 11)
RCM	Australian Radiocommunications Act, compliant with EN 61000-6-4; Industrial Emissions
Ex	European Union 2014/34/EU ATEX Directive, compliant with: • EN IEC 60079-0: Explosive atmospheres - Part 0: Equipment - General requirements • EN IEC 60079-7: Explosive atmospheres – Part 7: Equipment protection by increased safety "e" • II 3 G Ex ec IIC T4 Gc • UL22ATEX2820X
IECEx	IECEx System, compliant with: • IEC 60079-0: Explosive atmospheres - Part 0: Equipment - General requirements • IEC 60079-7: Explosive atmospheres – Part 7: Equipment protection by increased safety "e" • II 3 G Ex ec IIC T4 Gc • IECEx UL 22.0065X
UKex	In conformity with the following UKex Statutory Instruments and their amendments: • Schedule 1 of the UKEX Regulation 2016 No. 1107 • Equipment protection by increased safety "e", reference certificate number UL22UKEX2602X • Zone 2 classification according to UKEX Regulation 2016 No. 1107
FM	FM Approved Equipment for use in Class I Division 2 Group A,B,C,D Hazardous Locations
KC	Korean Registration of Broadcasting and Communications Equipment, compliant with Article 58-2 of Radio Waves Act, Clause 3
UKCA	In conformity with the following UK Statutory Instruments and their amendments: • 2016 No. 1091, Electromagnetic Compatibility Regulations • 2016 No. 1101, Electrical Equipment (Safety) Regulations • 2016 No. 1107, Equipment and Protective Systems Intended for Use in Potentially Explosive Atmospheres Regulations • 2012 No. 3032, Restriction of the Use of Certain Hazardous Substances in Electrical and Electronic Equipment
Morocco	In conformity with the following regulations: • Arrêté ministériel n° 6404-15 du 1 er muharram 1437 (15 octobre 2015) Équipements électriques destinés à être utilisés sous certaines limites de tension • Arrêté ministériel n° 6404-15 du 29 ramadan 1436 (16 juillet 2015) Compatibilité électromagnétique des équipements
CCC	CCC 2020122309111998 CNCA-C23-01 强制性产品认证实施规则 防爆电气 CNCA-C23-01 CCC Implementation Rule Explosion-Proof Electrical Products

(1) When product is marked. See the Product Certification link at rok.auto/certifications for Declarations of Conformity, Certificates, and other certification details.

1756-OB16D, 1756-OB16DK

ControlLogix DC (19.2...30V) diagnostic output module

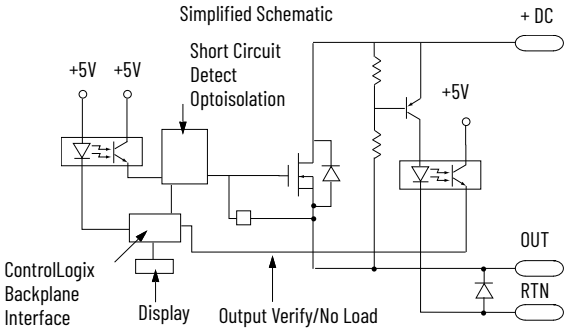

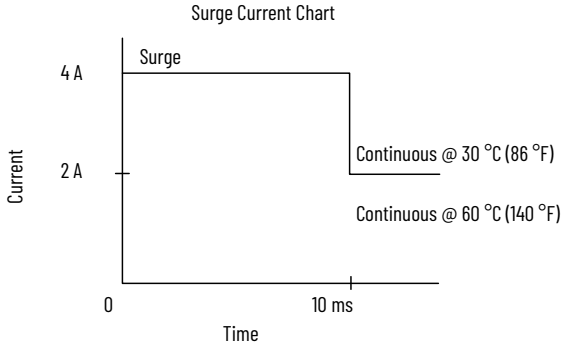

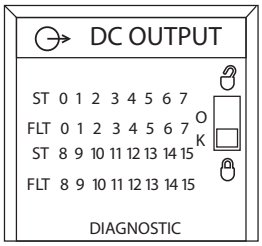

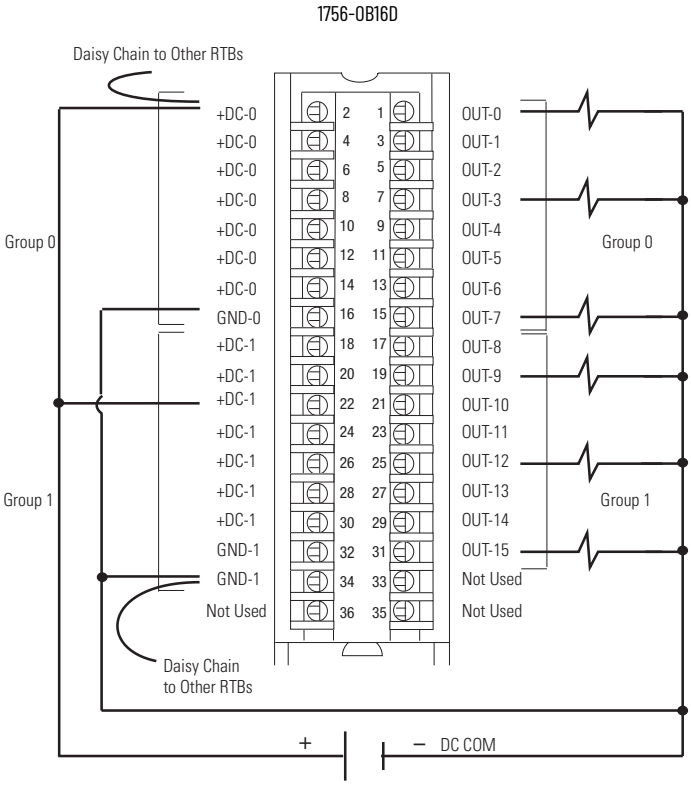

Diagnostic Specifications

Attribute	1756-OB16D, 1756-OB16DK
Short trip	8 A for 180 ms, min 10 A for 120 ms, min
No load	Off-state detection only
Output verification	On-state detection only
Pulse test	Configurable maximum pulse width
Time stamp of diagnostics	±1 ms

Technical Specifications

Attribute	1756-OB16D, 1756-OB16DK
Outputs	16 diagnostic (8 points/group)
Pilot duty (DC-13SQ)	2 A @ 30 °C (86 °F) 1 A @ 60 °C (140 °F)
Voltage category	24V DC source
Operating voltage range	19.2...30V DC
Output delay time Off to On On to Off	 60 µs nom/1 ms max 630 µs nom/5 ms max
Current draw @ 5.1V	250 mA
Current draw @ 24V	140 mA
Total backplane power	4.64 W
Power dissipation, max	3.3 W @ 60 °C (140 °F)
Thermal dissipation	11.25 BTU/hr
Off-state leakage current per point, max	1 mA per point
On-state voltage drop, max	1.2V DC @ 2 A
Current per point, max	2 A @ 30 °C (86 °F) linear derating 1 A @ 60 °C (140 °F) linear derating
Current per module, max	8 A @ 30 °C (86 °F) linear derating 4 A @ 60 °C (140 °F) linear derating
Surge current per point	4 A for 10 ms per point, repeatable every 1 s
Load current, min	3 mA per point
Scheduled outputs	Synchronization within 16.7 s max, reference to the Coordinated System Time
States in Fault mode per point	Hold last state, On or Off (Off is default)
States in Program mode per point	Hold last state, On or Off (Off is default)
Isolation voltage	250V (continuous), basic insulation type, outputs-to-backplane, and output group-to-group No isolation between individual group outputs
Module keying	Electronic, software configurable
Fusing	Electronically fused per point
Removable terminal block	1756-TBCH 1756-TBS6H
RTB keying	User-defined mechanical
Slot width	1
Wire category	1(1)
Enclosure type	None (open-style)
Temperature code	T4

(1) Use this conductor category information for planning conductor routing as described in the system-level installation manual. See the Industrial Automation Wiring and Grounding Guidelines, publication 1770-4.1.

Environmental Specifications

Attribute	1756-OB16D, 1756-OB16DK
Temperature, operating IEC 60068-2-1 (Test Ae, Operating Cold), IEC 60068-2-2 (Test Be, Operating Dry Heat), IEC 60068-2-14 (Test Nb, Operating Thermal Shock)	0 °C < Ta < 60 °C (32 °F < Ta < 140 °F)
Temperature, nonoperating IEC 60068-2-1 (Test Ab, Unpackaged Nonoperating Cold), IEC 60068-2-2 (Test Bb, Unpackaged Nonoperating Dry Heat), IEC 60068-2-14 (Test Na, Unpackaged Nonoperating Thermal Shock	-40...+85 °C (-40...+185 °F)
Relative humidity IEC 60068-2-30 (Test dB, Unpackaged Damp Heat)	5...95% noncondensing
Vibration IEC 60068-2-6 (Test Fc, Operating)	2 g @ 10...500 Hz
Shock, operating IEC 60068-2-27 (Test Ea, Unpackaged Shock)	30 g
Shock, nonoperating IEC 60068-2-27 (Test Ea, Unpackaged Shock)	50 g
Emissions	IEC 61000-6-4
ESD immunity IEC 61000-4-2	6 kV contact discharges 8 kV air discharges
Radiated RF immunity IEC 61000-4-3	10V/m with 1 kHz sine wave 80% AM from 80...2000 MHz 10V/m with 200 Hz 50% Pulse 100% AM @ 900 MHz 10V/m with 200 Hz 50% Pulse 100% AM @ 1890 MHz 3V/m with 1k Hz sine wave 80% AM from 2000...2700 MHz
EFT/B immunity IEC 61000-4-4	±4 kV at 5 kHz on signal ports
Surge transient immunity IEC 61000-4-5	±1 kV line-line (DM) and ±2 kV line-earth (CM) on signal ports
Conducted RF immunity IEC 61000-4-6	10V rms with 1 kHz sine wave 80% AM from 150 kHz...80 MHz

Certifications

Certification[1]	1756-OB16D, 1756-OB16DK
cULus	UL Listed Industrial Control Equipment, certified for US and Canada. See UL File E65584. UL Listed for Class I, Division 2 Group A,B,C,D Hazardous Locations, certified for U.S. and Canada. See UL File E194810.
CE	European Union 2004/108/EC EMC Directive, compliant with: • EN 61326-1; Meas./Control/Lab., Industrial Requirements • EN 61000-6-2; Industrial Immunity • EN 61000-6-4; Industrial Emissions • EN 61131-2; Programmable Controllers (Clause 8, Zone A & B) European Union 2014/35/EU LVD, compliant with EN 61131-2; Programmable Controllers (Clause 11)
RCM	Australian Radiocommunications Act, compliant with EN 61000-6-4; Industrial Emissions
Ex	European Union 2014/34/EU ATEX Directive, compliant with: • EN IEC 60079-0: Explosive atmospheres - Part 0: Equipment - General requirements • EN IEC 60079-7: Explosive atmospheres – Part 7: Equipment protection by increased safety "e" • II 3 G Ex ec IIC T4 Gc • UL22ATEX2820X
IECEx	IECEx System, compliant with: • IEC 60079-0: Explosive atmospheres - Part 0: Equipment - General requirements • IEC 60079-7: Explosive atmospheres – Part 7: Equipment protection by increased safety "e" • II 3 G Ex ec IIC T4 Gc • IECEx UL 22.0065X
UKex	In conformity with the following UKex Statutory Instruments and their amendments: • Schedule 1 of the UKEX Regulation 2016 No. 1107 • Equipment protection by increased safety "e", reference certificate number UL22UKEX2602X • Zone 2 classification according to UKEX Regulation 2016 No. 1107
FM	FM Approved Equipment for use in Class I Division 2 Group A,B,C,D Hazardous Locations
KC	Korean Registration of Broadcasting and Communications Equipment, compliant with Article 58-2 of Radio Waves Act, Clause 3
UKCA	In conformity with the following UK Statutory Instruments and their amendments: • 2016 No. 1091, Electromagnetic Compatibility Regulations • 2016 No. 1101, Electrical Equipment (Safety) Regulations • 2016 No. 1107, Equipment and Protective Systems Intended for Use in Potentially Explosive Atmospheres Regulations • 2012 No. 3032, Restriction of the Use of Certain Hazardous Substances in Electrical and Electronic Equipment
Morocco	In conformity with the following regulations: • Arrêté ministériel n° 6404-15 du 1 er muharram 1437 (15 octobre 2015) Équipements électriques destinés à être utilisés sous certaines limites de tension • Arrêté ministériel n° 6404-15 du 29 ramadan 1436 (16 juillet 2015) Compatibilité électromagnétique des équipements
CCC	CCC 2020122309111998 CNCA-C23-01 强制性产品认证实施规则 防爆电气 CNCA-C23-01 CCC Implementation Rule Explosion-Proof Electrical Products

(1) When product is marked. See the Product Certification link at rok.auto/certifications for Declarations of Conformity, Certificates, and other certification details.

1756-OB16E, 1756-OB16EK

ControlLogix DC (10...31.2V) electronically fused output module

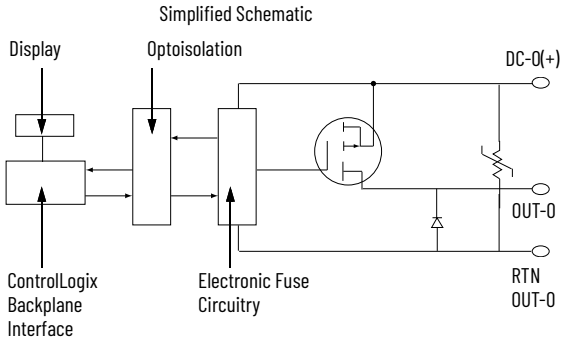

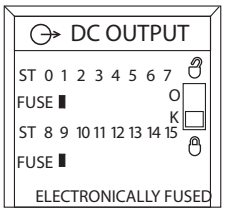

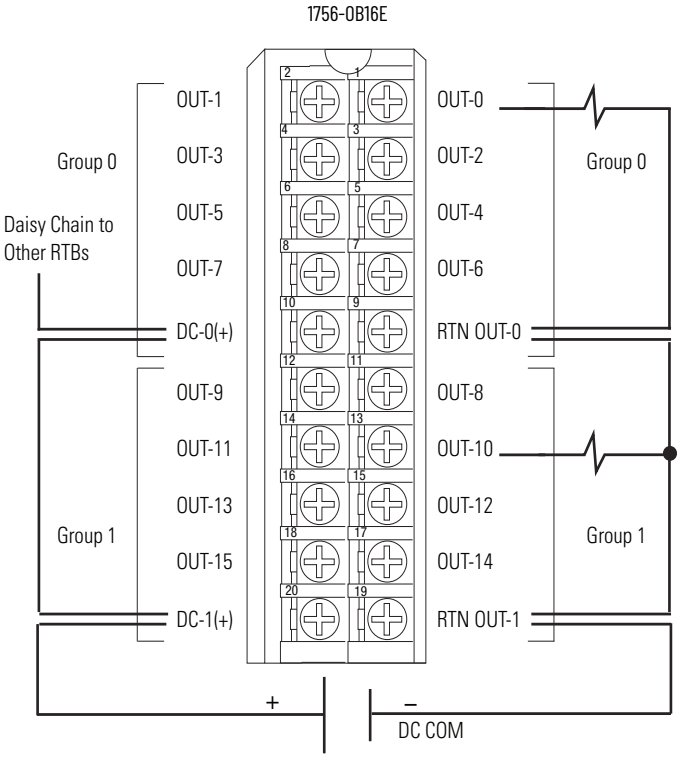

Surge Current Charts

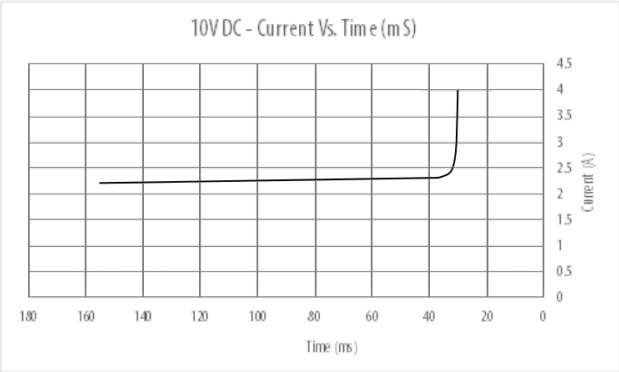

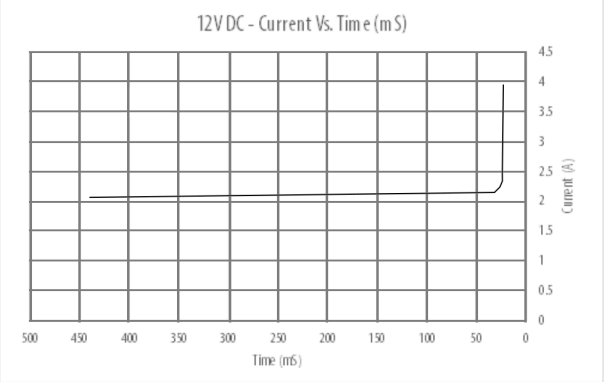

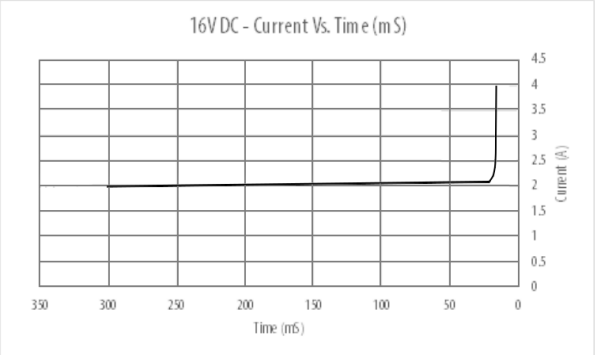

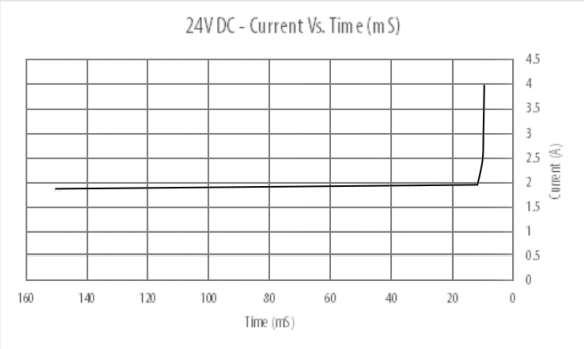

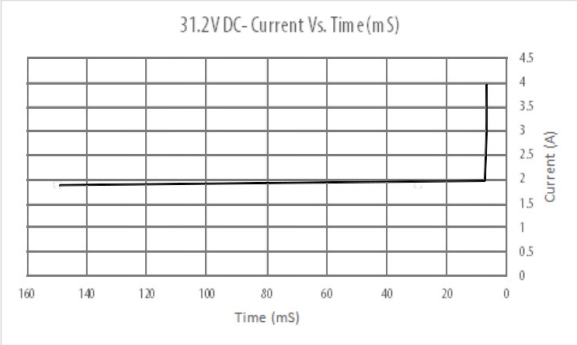

Technical Specifications

Attribute	1756-OB16E, 1756-OB16EK
Outputs	16 electronically fused (8 points/group)
Voltage category	12/24V DC source
Operating voltage range	10...31.2V DC
Output delay time Off to On On to Off	 70 µs nom/1 ms max 360 µs nom/1 ms max
Current draw @ 5.1V	250 mA
Current draw @ 24V	2 mA
Total backplane power	1.32 W
Power dissipation, max	4.1 W @ 60 °C (140 °F)
Thermal dissipation	13.98 BTU/hr
Off-state leakage current per point, max	1 mA per point
On-state voltage drop, max	400 mV DC @ 1 A
Current per point, max	1 A @ 60 °C (140 °F)
Current per module, max	8 A @ 60 °C (140 °F)
Surge current per point, typical	2 A for 10 ms per point, repeatable every 2 s @ 0 °C (32 °F) @ 24V DC
Load current, min	3 mA per point
Scheduled outputs	Synchronization within 16.7 s max, reference to the Coordinated System Time
States in Fault mode per point	Hold last state, On or Off (Off is default)
States in Program mode per point	Hold last state, On or Off (Off is default)
Isolation voltage	250V (continuous), basic insulation type, outputs-to-backplane, and output group-to-group No isolation between individual group outputs
Module keying	Electronic, software configurable
Fusing	Electronically fused per group
Removable terminal block	1756-TBNH 1756-TBSH
RTB keying	User-defined mechanical
Slot width	1
Wire category	1(1)
Enclosure type	None (open-style)
Temperature code	T4

(1) Use this conductor category information for planning conductor routing as described in the system-level installation manual. See the Industrial Automation Wiring and Grounding Guidelines, publication 1770-4.1.

Environmental Specifications

Attribute	1756-OB16E, 1756-OB16EK
Temperature, operating IEC 60068-2-1 (Test Ae, Operating Cold), IEC 60068-2-2 (Test Be, Operating Dry Heat), IEC 60068-2-14 (Test Nb, Operating Thermal Shock)	0...60 °C (32...140 °F)
Temperature, nonoperating IEC 60068-2-1 (Test Ab, Unpackaged Nonoperating Cold), IEC 60068-2-2 (Test Bb, Unpackaged Nonoperating Dry Heat), IEC 60068-2-14 (Test Na, Unpackaged Nonoperating Thermal Shock)	-40...+85 °C (-40...+185 °F)
Relative humidity IEC 60068-2-30 (Test dB, Unpackaged Damp Heat)	5...95% noncondensing
Vibration IEC 60068-2-6 (Test Fc, Operating)	2 g @ 10...500 Hz
Shock, operating IEC 60068-2-27 (Test Ea, Unpackaged Shock)	30 g
Shock, nonoperating IEC 60068-2-27 (Test Ea, Unpackaged Shock)	50 g
Emissions	IEC 61000-6-4
ESD immunity IEC 61000-4-2	6 kV contact discharges 8 kV air discharges
Radiated RF immunity IEC 61000-4-3	10V/m with 1 kHz sine wave 80% AM from 80...2000 MHz 10V/m with 200 Hz 50% Pulse 100% AM @ 900 MHz 10V/m with 200 Hz 50% Pulse 100% AM @ 1890 MHz 3V/m with 1 kHz sine wave 80% AM from 2000...2700 MHz
EFT/B immunity IEC 61000-4-4	±4 kV at 5 kHz on signal ports
Surge transient immunity IEC 61000-4-5	±1 kV line-line (DM) and ±2 kV line-earth (CM) on signal ports
Conducted RF immunity IEC 61000-4-6	10V rms with 1 kHz sine wave 80% AM from 150 kHz...80 MHz

Certifications

Certification[1]	1756-OB16E, 1756-OB16EK
cULus	UL Listed Industrial Control Equipment, certified for US and Canada. See UL File E65584. UL Listed for Class I, Division 2 Group A,B,C,D Hazardous Locations, certified for U.S. and Canada. See UL File E194810.
CE	European Union 2014/30/EU EMC Directive, compliant with: • EN 61326-1; Meas./Control/Lab., Industrial Requirements • EN 61000-6-2; Industrial Immunity • EN 61000-6-4; Industrial Emissions • EN 61131-2; Programmable Controllers (Clause 8, Zone A & B) European Union 2014/35/EU LVD, compliant with EN 61131-2; Programmable Controllers (Clause 11)
RCM	Australian Radiocommunications Act, compliant with EN 61000-6-4; Industrial Emissions
Ex	European Union 2014/34/EU ATEX Directive, compliant with: • EN IEC 60079-0: Explosive atmospheres - Part 0: Equipment - General requirements • EN IEC 60079-7: Explosive atmospheres – Part 7: Equipment protection by increased safety "e" • II 3 G Ex ec IIC T4 Gc • UL22ATEX2820X
IECEx	IECEx System, compliant with: • IEC 60079-0: Explosive atmospheres - Part 0: Equipment - General requirements • IEC 60079-7: Explosive atmospheres – Part 7: Equipment protection by increased safety "e" • II 3 G Ex ec IIC T4 Gc • IECEx UL 22.0065X
UKex	In conformity with the following UKex Statutory Instruments and their amendments: • Schedule 1 of the UKEX Regulation 2016 No. 1107 • Equipment protection by increased safety "e", reference certificate number UL22UKEX2602X • Zone 2 classification according to UKEX Regulation 2016 No. 1107
FM	FM Approved Equipment for use in Class I Division 2 Group A,B,C,D Hazardous Locations
KC	Korean Registration of Broadcasting and Communications Equipment, compliant with Article 58-2 of Radio Waves Act, Clause 3
UKCA	In conformity with the following UK Statutory Instruments and their amendments: • 2016 No. 1091, Electromagnetic Compatibility Regulations • 2016 No. 1101, Electrical Equipment (Safety) Regulations • 2016 No. 1107, Equipment and Protective Systems Intended for Use in Potentially Explosive Atmospheres Regulations • 2012 No. 3032, Restriction of the Use of Certain Hazardous Substances in Electrical and Electronic Equipment
Morocco	In conformity with the following regulations: • Arrêté ministériel n° 6404-15 du 1 er muharram 1437 (15 octobre 2015) Équipements électriques destinés à être utilisés sous certaines limites de tension • Arrêté ministériel n° 6404-15 du 29 ramadan 1436 (16 juillet 2015) Compatibilité électromagnétique des équipements
CCC	CCC 2020122309111998 CNCA-C23-01 强制性产品认证实施规则 防爆电气 CNCA-C23-01 CCC Implementation Rule Explosion-Proof Electrical Products

(1) When product is marked. See the Product Certification link at rok.auto/certifications for Declarations of Conformity, Certificates, and other certification details.

1756-OB16I, 1756-OB16IK

ControlLogix 24V DC isolated output module

Simplified Schematic

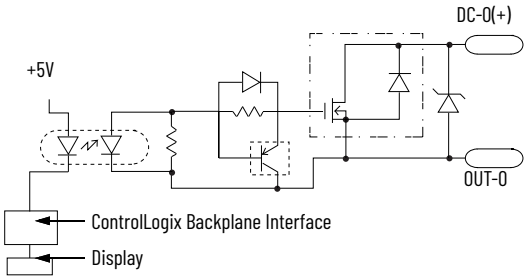

Surge Current Chart

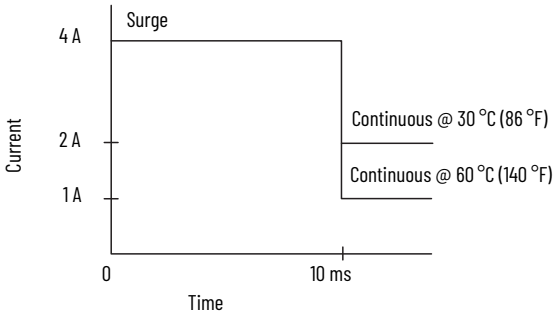

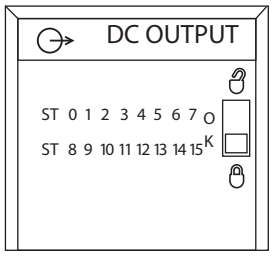

1756-OB16I

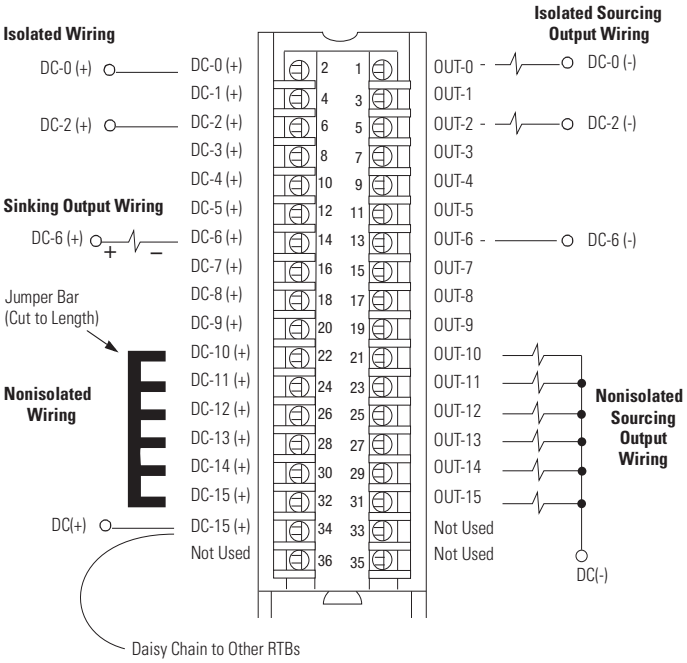

Additional jumper bars are available as catalog number 1756-JMPR.

Technical Specifications

Attribute	1756-OB16I, 1756-OB16IK
Outputs	16 individually isolated
Pilot duty	2 A (DC-13SQ)
Voltage category	12/24V DC sink/source
Operating voltage range[1]	10...30V DC
Output delay time Off to On On to Off	 1 ms max 2 ms max
Current draw @ 5.1V	350 mA
Current draw @ 24V	2.5 mA
Total backplane power	1.8 W
Power dissipation, max	3.6 W @ 60 °C (140 °F)
Thermal dissipation	12.28 BTU/hr
Off-state leakage current per point, max	0.5 mA per point
On-state voltage drop, max	1.2V DC @ 2 A
Current per point, max	2 A @ 30 °C (86 °F) 1 A @ 60 °C (140 °F) (linear derating)
Current per module, max	8 A @ 30 °C (86 °F) 4 A @ 60 °C (140 °F) (linear derating)
Surge current per point	4 A for 10 ms per point, repeatable every 2 s
Load current, min	1 mA per point
Scheduled outputs	Synchronization within 16.7 s max, reference to the Coordinated System Time
States in Fault mode per point	Hold last state, On or Off (Off is default)
States in Program mode per point	Hold last state, On or Off (Off is default)
Isolation voltage	250V (continuous), basic insulation type, outputs-to-backplane 125V (continuous), basic insulation type, output-to-output
Module keying	Electronic, software configurable
Fusing	Not protected. A fused IFM is recommended to help protect outputs.
Removable terminal block	1756-TBCH 1756-TBS6H
RTB keying	User-defined mechanical
Slot width	1
Wire category	1[2]
Enclosure type	None (open-style)
Temperature code	T4

(1) UL certification for 24V DC nominal. Rockwell Automation specified to 10...30V DC.
(2) Use this conductor category information for planning conductor routing as described in the system-level installation manual. See the Industrial Automation Wiring and Grounding Guidelines, publication 1770-4.1.

Environmental Specifications

Attribute	1756-OB16I, 1756-OB16IK
Temperature, operating IEC 60068-2-1 (Test Ae, Operating Cold), IEC 60068-2-2 (Test Be, Operating Dry Heat), IEC 60068-2-14 (Test Nb, Operating Thermal Shock)	0...60 °C (32...140 °F)
Temperature, nonoperating IEC 60068-2-1 (Test Ab, Unpackaged Nonoperating Cold), IEC 60068-2-2 (Test Bb, Unpackaged Nonoperating Dry Heat), IEC 60068-2-14 (Test Na, Unpackaged Nonoperating Thermal Shock)	-40...+85 °C (-40...+185 °F)
Relative humidity IEC 60068-2-30 (Test dB, Unpackaged Damp Heat)	5...95% noncondensing
Vibration IEC 60068-2-6 (Test Fc, Operating)	2 g @ 10...500 Hz
Shock, operating IEC 60068-2-27 (Test Ea, Unpackaged Shock)	30 g
Shock, nonoperating IEC 60068-2-27 (Test Ea, Unpackaged Shock)	50 g
Emissions	IEC 61000-6-4
ESD immunity IEC 61000-4-2	6 kV contact discharges 8 kV air discharges
Radiated RF immunity IEC 61000-4-3	10V/m with 1 kHz sine wave 80% AM from 80...2000 MHz 10V/m with 200 Hz 50% Pulse 100% AM @ 900 MHz 10V/m with 200 Hz 50% Pulse 100% AM @ 1890 MHz 3V/m with 1 kHz sine wave 80% AM from 2000...2700 MHz
EFT/B immunity IEC 61000-4-4	±4 kV at 5 kHz on signal ports
Surge transient immunity IEC 61000-4-5	±1 kV line-line (DM) and ±2 kV line-earth (CM) on signal ports
Conducted RF immunity IEC 61000-4-6	10V rms with 1 kHz sine wave 80% AM from 150 kHz...80 MHz

Certifications

Certification[1]	1756-OB16I, 1756-OB16IK
cULus	UL Listed Industrial Control Equipment, certified for US and Canada. See UL File E65584. UL Listed for Class I, Division 2 Group A,B,C,D Hazardous Locations, certified for U.S. and Canada. See UL File E194810.
CE	European Union 2014/30/EU EMC Directive, compliant with: • EN 61326-1; Meas./Control/Lab., Industrial Requirements • EN 61000-6-2; Industrial Immunity • EN 61000-6-4; Industrial Emissions • EN 61131-2; Programmable Controllers (Clause 8, Zone A & B) European Union 2014/35/EU LVD, compliant with EN 61131-2; Programmable Controllers (Clause 11)
RCM	Australian Radiocommunications Act, compliant with EN 61000-6-4; Industrial Emissions
Ex	European Union 2014/34/EU ATEX Directive, compliant with: • EN IEC 60079-0: Explosive atmospheres - Part 0: Equipment - General requirements • EN IEC 60079-7: Explosive atmospheres – Part 7: Equipment protection by increased safety "e" • II 3 G Ex ec IIC T4 Gc • UL22ATEX2820X
IECEx	IECEx System, compliant with: • IEC 60079-0: Explosive atmospheres - Part 0: Equipment - General requirements • IEC 60079-7: Explosive atmospheres – Part 7: Equipment protection by increased safety "e" • II 3 G Ex ec IIC T4 Gc • IECEx UL 22.0065X
UKex	In conformity with the following UKex Statutory Instruments and their amendments: • Schedule 1 of the UKEX Regulation 2016 No. 1107 • Equipment protection by increased safety "e", reference certificate number UL22UKEX2602X • Zone 2 classification according to UKEX Regulation 2016 No. 1107
FM	FM Approved Equipment for use in Class I Division 2 Group A,B,C,D Hazardous Locations
KC	Korean Registration of Broadcasting and Communications Equipment, compliant with Article 58-2 of Radio Waves Act, Clause 3
UKCA	In conformity with the following UK Statutory Instruments and their amendments: • 2016 No. 1091, Electromagnetic Compatibility Regulations • 2016 No. 1101, Electrical Equipment (Safety) Regulations • 2016 No. 1107, Equipment and Protective Systems Intended for Use in Potentially Explosive Atmospheres Regulations • 2012 No. 3032, Restriction of the Use of Certain Hazardous Substances in Electrical and Electronic Equipment
Morocco	In conformity with the following regulations: • Arrêté ministériel n° 6404-15 du 1 er muharram 1437 (15 octobre 2015) Équipements électriques destinés à être utilisés sous certaines limites de tension • Arrêté ministériel n° 6404-15 du 29 ramadan 1436 (16 juillet 2015) Compatibilité électromagnétique des équipements
CCC	CCC 2020122309111998 CNCA-C23-01 强制性产品认证实施规则 防爆电气 CNCA-C23-01 CCC Implementation Rule Explosion-Proof Electrical Products

(1) When product is marked. See the Product Certification link at rok.auto/certifications for Declarations of Conformity, Certificates, and other certification details.

1756-OB16IEF, 1756-OB16IEFK

ControlLogix DC (10...30V) electronically protected, sinking, or sourcing, isolated, fast output module

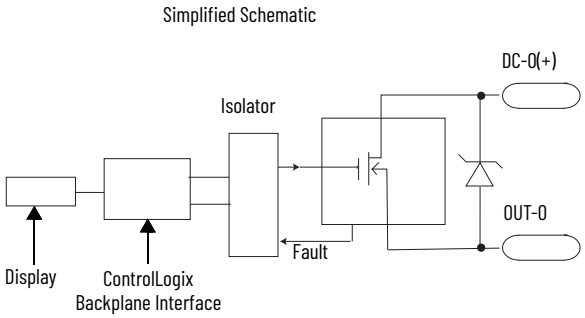

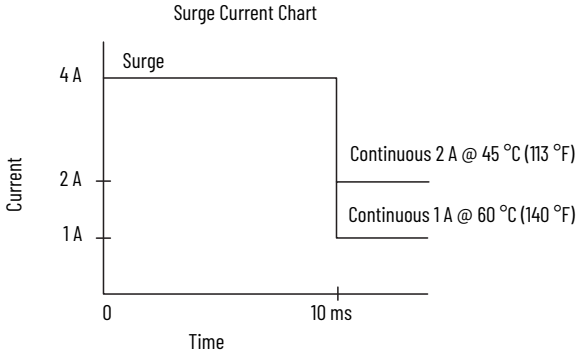

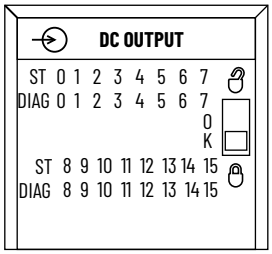

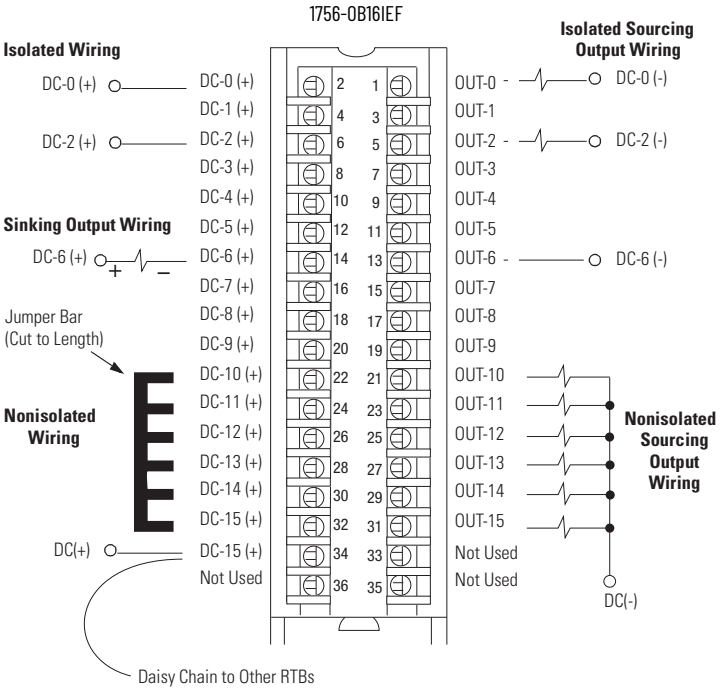

Additional jumper bars can be purchased by using catalog number 1756-JMPR.

Technical Specifications

Attribute	1756-OB16IEF, 1756-OB16IEFK
Outputs	16 individually isolated
Pilot duty	4 A inrush
Voltage category	12/24V DC sink/source
Operating voltage range	10...30V DC
Output delay time (backplane to screw) Off to On On to Off	 14 µs nom/23 µs max 14 µs nom/23 µs max
PWM cycle time	1 ms min/1 hour max
PWM On time	200 µs min/1 hour max
PWM On time accuracy	± 20 µs
Current draw @ 5.1V	320 mA
Current draw @ 24V	3 mA
Total backplane power	1.7 W
Power dissipation	4.9 W max (16 channels @ 1 A or 4 channels @ 2 A)
Thermal dissipation	16.71 BTU/hr
Off-state leakage current per point, max	< 0.1 mA per point
On-state voltage drop, max	0.2V DC @ 1 A 0.4V DC @ 2 A
Current per point, max	2 A @ 45 °C (113 °F) 4 channels max 1 A @ 60 °C (140 °F)
Current per module, max	16 A @ 60 °C (140 °F) 1 A max per channel 8 A @ 45 °C (113 °F) 2 A max per channel
Surge current per point	4 A for 10 ms per point, repeatable every 2 s
Load current, min	1 mA per point
Scheduled outputs	CIP Sync™ only
States in Fault mode per point	Hold last state, On or Off (Off is default)
Duration of Fault mode per point	1, 2, 5, 10 s, Forever (Forever is default)
Final state after Fault mode duration per point	On or Off (default is Off)
States in Program mode per point	Hold last state, On or Off (default is Off)
Isolation voltage	250V (continuous), reinforced insulation type, outputs-to-backplane 250V (continuous), basic insulation type, output-to-output
Module keying	Electronic, software configurable
Fusing	Electronically fused per point
Reverse polarity protection	No
Removable terminal block	1756-TBCH 1756-TBS6H
RTB keying	User-defined mechanical
Slot width	1
Wire category	1 on signal ports(1)
Enclosure type	None (open-style)
Temperature code	T4

(1) Use this conductor category information for planning conductor routing as described in the system-level installation manual. See the Industrial Automation Wiring and Grounding Guidelines, publication 1770-4.1.

Environmental Specifications

Attribute	1756-OB16IEF, 1756-OB16IEFK
Temperature, operating IEC 60068-2-1 (Test Ae, Operating Cold), IEC 60068-2-2 (Test Be, Operating Dry Heat), IEC 60068-2-14 (Test Nb, Operating Thermal Shock)	0...60 °C (32...140 °F)
Temperature, nonoperating IEC 60068-2-1 (Test Ab, Unpackaged Nonoperating Cold), IEC 60068-2-2 (Test Bb, Unpackaged Nonoperating Dry Heat), IEC 60068-2-14 (Test Na, Unpackaged Nonoperating Thermal Shock)	-40...+85 °C (-40...+185 °F)
Relative humidity IEC 60068-2-30 (Test dB, Unpackaged Damp Heat)	5...95% noncondensing
Vibration IEC 60068-2-6 (Test Fc, Operating)	2 g @ 10...500 Hz
Shock, operating IEC 60068-2-27 (Test Ea, Unpackaged Shock)	30 g
Shock, nonoperating IEC 60068-2-27 (Test Ea, Unpackaged Shock)	50 g
Emissions	IEC 61000-6-4
ESD immunity IEC 61000-4-2	6 kV contact discharges 8 kV air discharges
Radiated RF immunity IEC 61000-4-3	10V/m with 1 kHz sine wave 80% AM from 80...2000 MHz 10V/m with 200 Hz 50% Pulse 100% AM @ 900 MHz 10V/m with 200 Hz 50% Pulse 100% AM @ 1890 MHz 3V/m with 1 kHz sine wave 80% AM from 2000...2700 MHz
EFT/B immunity IEC 61000-4-4	±4 kV at 5 kHz on signal ports
Surge transient immunity IEC 61000-4-5	±1 kV line-line (DM) and ±2 kV line-earth (CM) on signal ports
Conducted RF immunity IEC 61000-4-6	10V rms with 1 kHz sine wave 80% AM from 150 kHz...80 MHz

Certifications

Certification[1]	1756-OB16IEF, 1756-OB16IEFK
cULus	UL Listed Industrial Control Equipment, certified for US and Canada. See UL File E65584. UL Listed for Class I, Division 2 Group A,B,C,D Hazardous Locations, certified for U.S. and Canada. See UL File E194810.
CE	European Union 2014/30/EU EMC Directive, compliant with: • EN 61326-1; Meas./Control/Lab., Industrial Requirements • EN 61000-6-2; Industrial Immunity • EN 61000-6-4; Industrial Emissions • EN 61131-2; Programmable Controllers (Clause 8, Zone A & B) European Union 2014/35/EU LVD, compliant with EN 61131-2; Programmable Controllers (Clause 11)
RCM	Australian Radiocommunications Act, compliant with EN 61000-6-4; Industrial Emissions
Ex	European Union 2014/34/EU ATEX Directive, compliant with: • EN IEC 60079-0: Explosive atmospheres - Part 0: Equipment - General requirements • EN IEC 60079-7: Explosive atmospheres – Part 7: Equipment protection by increased safety "e" • II 3 G Ex ec IIC T4 Gc • UL22ATEX2820X
IECEx	IECEx System, compliant with: • IEC 60079-0: Explosive atmospheres - Part 0: Equipment - General requirements • IEC 60079-7: Explosive atmospheres – Part 7: Equipment protection by increased safety "e" • II 3 G Ex ec IIC T4 Gc • IECEx UL 22.0065X
UKex	In conformity with the following UKex Statutory Instruments and their amendments: • Schedule 1 of the UKEX Regulation 2016 No. 1107 • Equipment protection by increased safety "e", reference certificate number UL22UKEX2602X • Zone 2 classification according to UKEX Regulation 2016 No. 1107
KC	Korean Registration of Broadcasting and Communications Equipment, compliant with Article 58-2 of Radio Waves Act, Clause 3
UKCA	In conformity with the following UK Statutory Instruments and their amendments: • 2016 No. 1091, Electromagnetic Compatibility Regulations • 2016 No. 1101, Electrical Equipment (Safety) Regulations • 2016 No. 1107, Equipment and Protective Systems Intended for Use in Potentially Explosive Atmospheres Regulations • 2012 No. 3032, Restriction of the Use of Certain Hazardous Substances in Electrical and Electronic Equipment
Morocco	In conformity with the following regulations: • Arrêté ministériel n° 6404-15 du 1 er muharram 1437 (15 octobre 2015) Équipements électriques destinés à être utilisés sous certaines limites de tension • Arrêté ministériel n° 6404-15 du 29 ramadan 1436 (16 juillet 2015) Compatibilité électromagnétique des équipements
CCC	CCC 2020122309111998 CNCA-C23-01 强制性产品认证实施规则 防爆电气 CNCA-C23-01 CCC Implementation Rule Explosion-Proof Electrical Products

(1) When product is marked. See the Product Certification link at rok.auto/certifications for Declarations of Conformity, Certificates, and other certification details.

1756-OB16IEFS, 1756-OB16IEFSK

ControlLogix DC (10...30V) scheduled, electronically protected, sinking, or sourcing, isolated, fast output module

Simplified Schematic

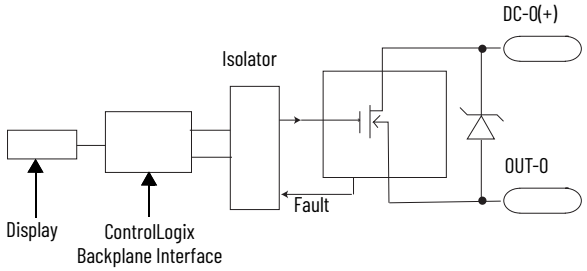

Surge Current Chart

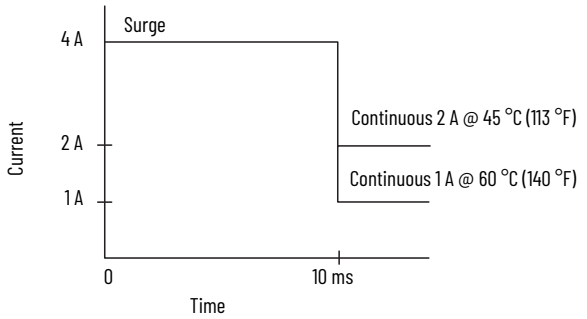

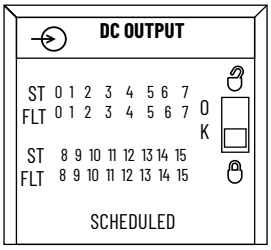

1756-OB16IEFS

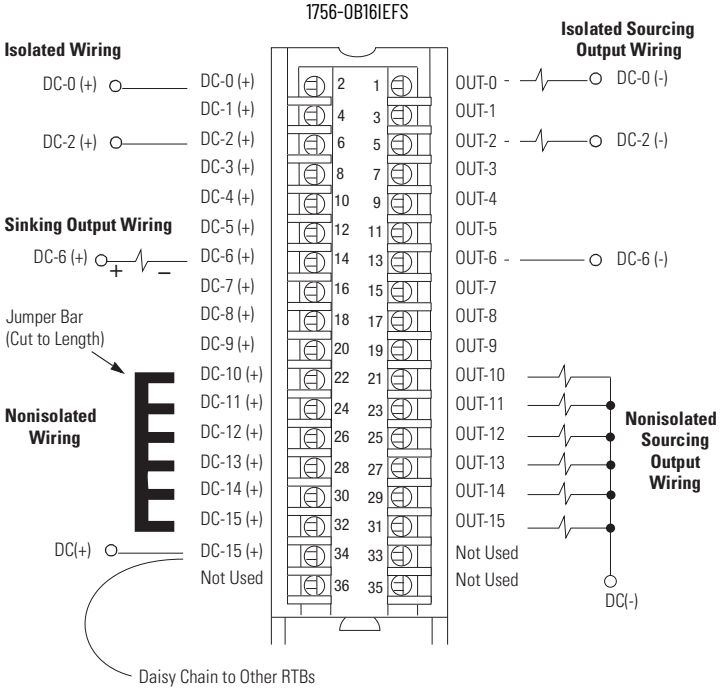

Additional jumper bars can be purchased by using catalog number 1756-JMPR.

Technical Specifications

Attribute	1756-OB16IEFS, 1756-OB16IEFSK
Outputs	16 scheduled, individually isolated
Pilot duty	4 A inrush
Voltage category	12/24V DC sink/source
Operating voltage range	10...30V DC
Unscheduled output delay time (backplane to screw) Off to On On to Off	 14 µs nom/23 µs max 14 µs nom/23 µs max
Schedule accuracy	± 10 µs nom when all components are synchronized to the current CIP Sync Grandmaster
PWM cycle time	1 ms min/1 hour max
PWM On time	200 µs min/1 hour max
PWM On-time accuracy	± 20 µs
Current draw @ 5.1V	320 mA
Current draw @ 24V	3 mA
Total backplane power	1.7 W
Power dissipation	4.9 W max (16 channels @ 1 A or 4 channels @ 2 A)
Thermal dissipation	16.71 BTU/hr
Off-state leakage current per point, max	< 0.1 mA per point
On-state voltage drop, max	0.2V DC @ 1 A 0.4V DC @ 2 A
Current per point, max	2 A @ 45 °C (113 °F) 4 channels max 1 A @ 60 °C (140 °F)
Current per module, max	16 A @ 60 °C (140 °F) 1 A max per channel 8 A @ 45 °C (113 °F) 2 A max per channel
Surge current per point	4 A for 10 ms per point, repeatable every 2 s
Load current, min	1 mA per point
Scheduled outputs	CIP Sync only
States in Fault mode per point	Hold last state, On or Off (Off is default)
Duration of Fault mode per point	1, 2, 5, 10 s, Forever (Forever is default)
Final state after Fault mode duration per point	On or Off (default is Off)
States in Program mode per point	Hold last state, On or Off (default is Off)
Isolation voltage	250V (continuous), reinforced insulation type, outputs-to-backplane 250V (continuous), basic insulation type, output-to-output
Module keying	Electronic, software configurable
Fusing	Electronically fused per point
Reverse polarity protection	No
Removable terminal block	1756-TBCH 1756-TBS6H
RTB keying	User-defined mechanical
Slot width	1
Wire category	1 on signal ports(1)
Enclosure type	None (open-style)
Temperature code	T4

(1) Use this conductor category information for planning conductor routing as described in the system-level installation manual. See the Industrial Automation Wiring and Grounding Guidelines, publication 1770-4.1.

Environmental Specifications

Attribute	1756-OB16IEFS, 1756-OB16IEFSK
Temperature, operating IEC 60068-2-1 (Test Ae, Operating Cold), IEC 60068-2-2 (Test Be, Operating Dry Heat), IEC 60068-2-14 (Test Nb, Operating Thermal Shock)	0...60 °C (32...140 °F)
Temperature, nonoperating IEC 60068-2-1 (Test Ab, Unpackaged Nonoperating Cold), IEC 60068-2-2 (Test Bb, Unpackaged Nonoperating Dry Heat), IEC 60068-2-14 (Test Na, Unpackaged Nonoperating Thermal Shock)	-40...+85 °C (-40...+185 °F)
Relative humidity IEC 60068-2-30 (Test dB, Unpackaged Damp Heat)	5...95% noncondensing
Vibration IEC 60068-2-6 (Test Fc, Operating)	2 g @ 10...500 Hz
Shock, operating IEC 60068-2-27 (Test Ea, Unpackaged Shock)	30 g
Shock, nonoperating IEC 60068-2-27 (Test Ea, Unpackaged Shock)	50 g
Emissions	IEC 61000-6-4
ESD immunity IEC 61000-4-2	6 kV contact discharges 8 kV air discharges
Radiated RF immunity IEC 61000-4-3	10V/m with 1 kHz sine wave 80% AM from 80...2000 MHz 10V/m with 200 Hz 50% Pulse 100% AM @ 900 MHz 10V/m with 200 Hz 50% Pulse 100% AM @ 1890 MHz 3V/m with 1 kHz sine wave 80% AM from 2000...2700 MHz
EFT/B immunity IEC 61000-4-4	±4 kV at 5 kHz on signal ports
Surge transient immunity IEC 61000-4-5	±1 kV line-line (DM) and ±2 kV line-earth (CM) on signal ports
Conducted RF immunity IEC 61000-4-6	10V rms with 1 kHz sine wave 80% AM from 150 kHz...80 MHz

Certifications

Certification[1]	1756-OB16IEFS, 1756-OB16IEFSK
cULus	UL Listed Industrial Control Equipment, certified for US and Canada. See UL File E65584. UL Listed for Class I, Division 2 Group A,B,C,D Hazardous Locations, certified for U.S. and Canada. See UL File E194810.
CE	European Union 2014/30/EU EMC Directive, compliant with: • EN 61326-1; Meas./Control/Lab., Industrial Requirements • EN 61000-6-2; Industrial Immunity • EN 61000-6-4; Industrial Emissions • EN 61131-2; Programmable Controllers (Clause 8, Zone A & B) European Union 2014/35/EU LVD, compliant with EN 61131-2; Programmable Controllers (Clause 11)
RCM	Australian Radiocommunications Act, compliant with EN 61000-6-4; Industrial Emissions
Ex	European Union 2014/34/EU ATEX Directive, compliant with: • EN IEC 60079-0: Explosive atmospheres - Part 0: Equipment - General requirements • EN IEC 60079-7: Explosive atmospheres – Part 7: Equipment protection by increased safety "e" • II 3 G Ex ec IIC T4 Gc • UL22ATEX2820X
IECEx	IECEx System, compliant with: • IEC 60079-0: Explosive atmospheres - Part 0: Equipment - General requirements • IEC 60079-7: Explosive atmospheres – Part 7: Equipment protection by increased safety "e" • II 3 G Ex ec IIC T4 Gc • IECEx UL 22.0065X
UKex	In conformity with the following UKex Statutory Instruments and their amendments: • Schedule 1 of the UKEX Regulation 2016 No. 1107 • Equipment protection by increased safety "e", reference certificate number UL22UKEX2602X • Zone 2 classification according to UKEX Regulation 2016 No. 1107
KC	Korean Registration of Broadcasting and Communications Equipment, compliant with Article 58-2 of Radio Waves Act, Clause 3
UKCA	In conformity with the following UK Statutory Instruments and their amendments: • 2016 No. 1091, Electromagnetic Compatibility Regulations • 2016 No. 1101, Electrical Equipment (Safety) Regulations • 2016 No. 1107, Equipment and Protective Systems Intended for Use in Potentially Explosive Atmospheres Regulations • 2012 No. 3032, Restriction of the Use of Certain Hazardous Substances in Electrical and Electronic Equipment
Morocco	In conformity with the following regulations: • Arrêté ministériel n° 6404-15 du 1 er muharram 1437 (15 octobre 2015) Équipements électriques destinés à être utilisés sous certaines limites de tension • Arrêté ministériel n° 6404-15 du 29 ramadan 1436 (16 juillet 2015) Compatibilité électromagnétique des équipements
CCC	CCC 2020122309111998 CNCA-C23-01 强制性产品认证实施规则 防爆电气 CNCA-C23-01 CCC Implementation Rule Explosion-Proof Electrical Products

(1) When product is marked. See the Product Certification link at rok.auto/certifications for Declarations of Conformity, Certificates, and other certification details.

1756-OB16IS

ControlLogix 24V DC scheduled, isolated output module

Simplified Schematic

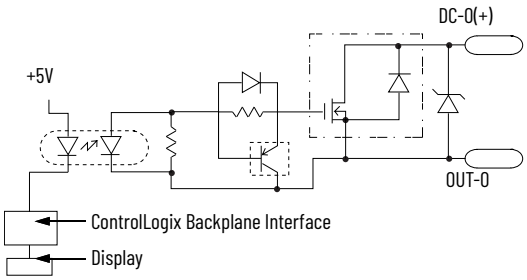

Surge Current Chart

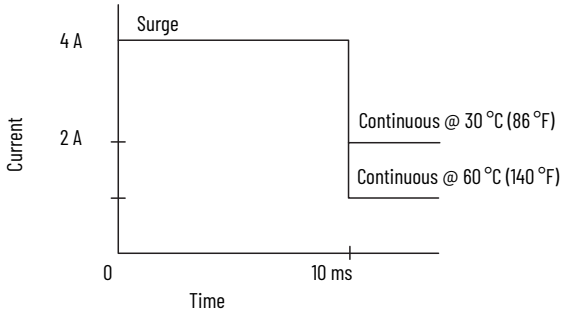

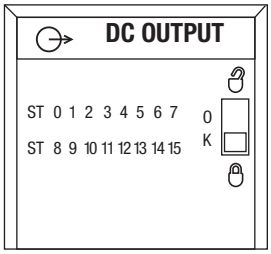

1756-OB16IS

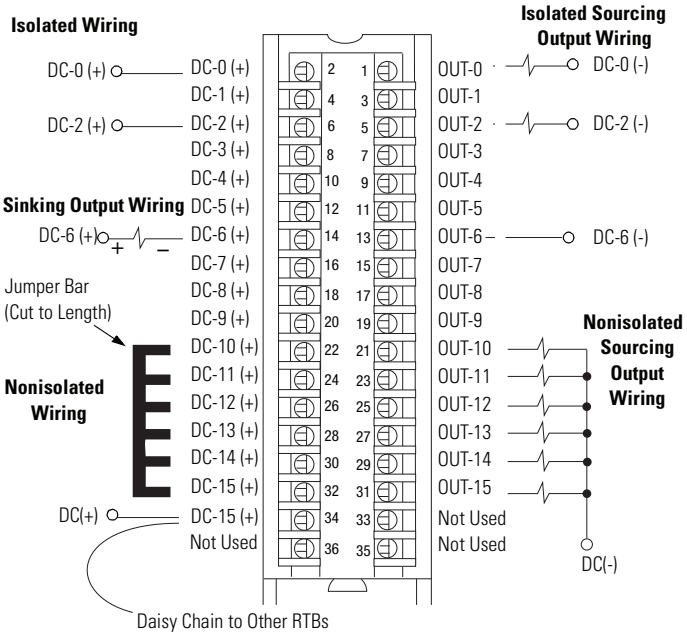

Additional jumper bars are available as catalog number 1756-JMPR.

Technical Specifications

Attribute	1756-OB16IS
Outputs	16 individually isolated, 8 scheduled
Pilot duty	2 A (DC-13SQ)
Voltage category	12/24V DC sink/source
Operating voltage range(1)	10...30V DC
Output delay time Off to On On to Off	 1 ms max 2 ms max
Current draw @ 5.1V	350 mA
Current draw @ 24V	2.5 mA
Total backplane power	1.8 W
Power dissipation, max	3.6 W @ 60 °C (140 °F)
Thermal dissipation	12.28 BTU/hr
Off-state leakage current per point, max	0.5 mA per point
On-state voltage drop, max	1.2V DC @ 2 A
Current per point, max	2 A @ 30 °C (86 °F) 1 A @ 60 °C (140 °F) (linear derating)
Current per module, max	8 A @ 30 °C (86 °F) 4 A @ 60 °C (140 °F) (linear derating)
Surge current per point	4 A for 10 ms per point, repeatable every 2 s
Load current, min	1 mA per point
Scheduled outputs	Synchronization within 16.7 s max, reference to the Coordinated System Time
States in Fault mode per point	Hold last state, On or Off (Off is default)
States in Program mode per point	Hold last state, On or Off (Off is default)
Isolation voltage	250V (continuous), basic insulation type, outputs-to-backplane, and output-to-output
Module keying	Electronic, software configurable
Fusing	Not protected. A fused IFM can be used to help protect outputs. See publication 1492-TD008. However, the ControlLogix system has been agency certified using only the ControlLogix RTBs, 1756-TBCH, 1756-TBNH, 1756-TBSH, and 1756-TBS6H. Any application that requires agency certification of the ControlLogix system that uses other wiring termination methods can require application-specific approval by the certifying agency.
Removable terminal block	1756-TBCH 1756-TBS6H
RTB keying	User-defined mechanical
Slot width	1
Wire category	1(2)
Wire type	Copper
Enclosure type	None (open-style)
Temperature code	T4

(1) UL certification for 24V DC nominal. Rockwell Automation specified to 10...30V DC
(2) Use this conductor category information for planning conductor routing as described in the system-level installation manual. See the Industrial Automation Wiring and Grounding Guidelines, publication 1770-4.1.

Environmental Specifications

Attribute	1756-OB16IS
Temperature, operating IEC 60068-2-1 (Test Ae, Operating Cold), IEC 60068-2-2 (Test Be, Operating Dry Heat), IEC 60068-2-14 (Test Nb, Operating Thermal Shock)	0...60 °C (32...140 °F)
Temperature, nonoperating IEC 60068-2-1 (Test Ab, Unpackaged Nonoperating Cold), IEC 60068-2-2 (Test Bb, Unpackaged Nonoperating Dry Heat), IEC 60068-2-14 (Test Na, Unpackaged Nonoperating Thermal Shock)	-40...+85 °C (-40...+185 °F)
Relative humidity IEC 60068-2-30 (Test dB, Unpackaged Damp Heat)	5...95% noncondensing
Vibration IEC 60068-2-6 (Test Fc, Operating)	2 g @ 10...500 Hz
Shock, operating IEC 60068-2-27 (Test Ea, Unpackaged Shock)	30 g
Shock, nonoperating IEC 60068-2-27 (Test Ea, Unpackaged Shock)	50 g
Emissions	IEC 61000-6-4
ESD immunity IEC 61000-4-2	6 kV contact discharges 8 kV air discharges
Radiated RF immunity IEC 61000-4-3	10V/m with 1 kHz sine wave 80% AM from 80...2000 MHz 10V/m with 200 Hz 50% Pulse 100% AM @ 900 MHz 10V/m with 200 Hz 50% Pulse 100% AM @ 1890 MHz 3V/m with 1 kHz sine wave 80% AM from 2000...2700 MHz
EFT/B immunity IEC 61000-4-4	±4 kV at 5 kHz on signal ports
Surge transient immunity IEC 61000-4-5	±1 kV line-line (DM) and ±2 kV line-earth (CM) on signal ports
Conducted RF immunity IEC 61000-4-6	10V rms with 1 kHz sine wave 80% AM from 150 kHz...80 MHz

Certifications

Certification[1]	1756-OB16IS
cULus	UL Listed Industrial Control Equipment, certified for US and Canada. See UL File E65584. UL Listed for Class I, Division 2 Group A,B,C,D Hazardous Locations, certified for U.S. and Canada. See UL File E194810.
CE	European Union 2014/30/EU EMC Directive, compliant with: • EN 61326-1; Meas./Control/Lab., Industrial Requirements • EN 61000-6-2; Industrial Immunity • EN 61000-6-4; Industrial Emissions • EN 61131-2; Programmable Controllers (Clause 8, Zone A & B) European Union 2014/35/EU LVD, compliant with EN 61131-2; Programmable Controllers (Clause 11)
RCM	Australian Radiocommunications Act, compliant with EN 61000-6-4; Industrial Emissions
Ex	European Union 2014/34/EU ATEX Directive, compliant with: • EN IEC 60079-0: Explosive atmospheres - Part 0: Equipment - General requirements • EN IEC 60079-7: Explosive atmospheres – Part 7: Equipment protection by increased safety "e" • II 3 G Ex ec IIC T4 Gc • UL22ATEX2820X
IECEx	IECEx System, compliant with: • IEC 60079-0: Explosive atmospheres - Part 0: Equipment - General requirements • IEC 60079-7: Explosive atmospheres – Part 7: Equipment protection by increased safety "e" • II 3 G Ex ec IIC T4 Gc • IECEx UL 22.0065X
UKex	In conformity with the following UKex Statutory Instruments and their amendments: • Schedule 1 of the UKEX Regulation 2016 No. 1107 • Equipment protection by increased safety "e", reference certificate number UL22UKEX2602X • Zone 2 classification according to UKEX Regulation 2016 No. 1107
KC	Korean Registration of Broadcasting and Communications Equipment, compliant with Article 58-2 of Radio Waves Act, Clause 3
UKCA	In conformity with the following UK Statutory Instruments and their amendments: • 2016 No. 1091, Electromagnetic Compatibility Regulations • 2016 No. 1101, Electrical Equipment (Safety) Regulations • 2016 No. 1107, Equipment and Protective Systems Intended for Use in Potentially Explosive Atmospheres Regulations • 2012 No. 3032, Restriction of the Use of Certain Hazardous Substances in Electrical and Electronic Equipment
Morocco	In conformity with the following regulations: • Arrêté ministériel n° 6404-15 du 1 er muharram 1437 (15 octobre 2015) Équipements électriques destinés à être utilisés sous certaines limites de tension • Arrêté ministériel n° 6404-15 du 29 ramadan 1436 (16 juillet 2015) Compatibilité électromagnétique des équipements
CCC	CCC 2020122309111998 CNCA-C23-01 强制性产品认证实施规则 防爆电气 CNCA-C23-01 CCC Implementation Rule Explosion-Proof Electrical Products

(1) When product is marked. See the Product Certification link at rok.auto/certifications for Declarations of Conformity, Certificates, and other certification details.

1756-OB32, 1756-OB32K, 1756-OB32XT

ControlLogix DC (10...31.2V) output module

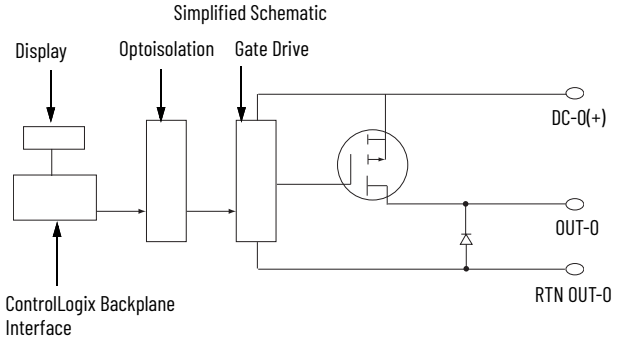

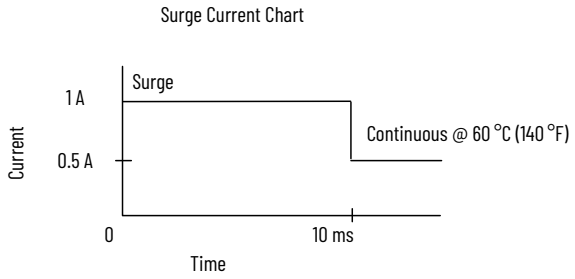

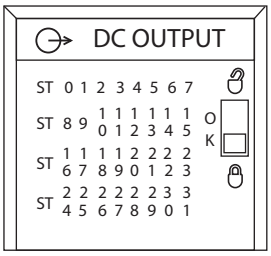

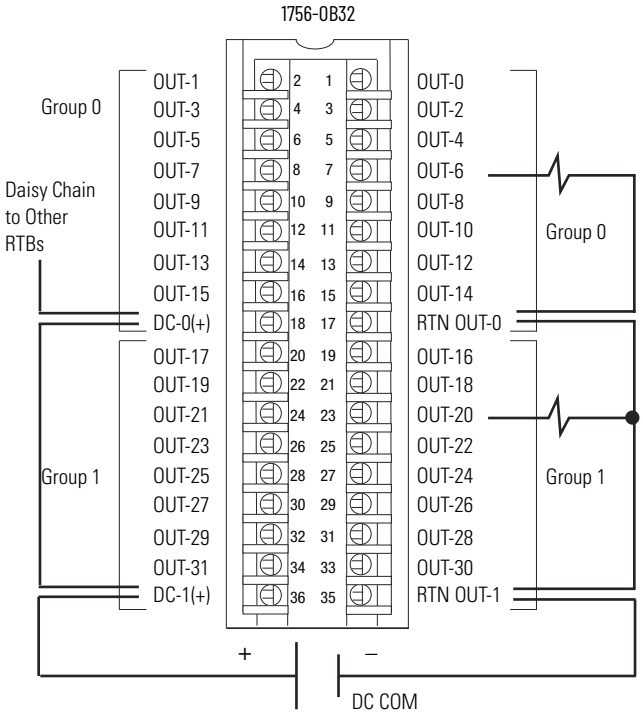

Technical Specifications

Attribute	1756-OB32, 1756-OB32K	1756-OB32XT
Outputs	32 (16 points/group)	
Voltage category	12/24V DC source	
Operating voltage range	10...31.2V DC	
Output delay time Off to On On to Off	60 µs nom/1 ms max 200 µs nom/1 ms max	
Current draw @ 5.1V	300 mA	
Current draw @ 24V	2 mA	
Total backplane power	1.58 W	
Power dissipation, max	4.8 W @ 60 °C (140 °F)	
Thermal dissipation	16.37 BTU/hr	
Off-state leakage current per point, max	0.5 mA per point	
On-state voltage drop, max	200 mV DC @ 0.5 A	
Current per point, max	0.5 A @ 50 °C (122 °F) linear derating 0.35 A @ 60 °C (140 °F)	
Current per module, max	16 A @ 50 °C (122 °F) linear derating 10 A @ 60 °C (140 °F)	
Surge current per point, max	1 A for 10 ms per point, repeatable every 2 s @ 60 °C (140 °F)	
Load current, min	3 mA per point	
Scheduled outputs	Synchronization within 16.7 s max, reference to the Coordinated System Time	
States in Fault mode per point	Hold last state, On or Off (Off is default)	
States in Program mode per point	Hold last state, On or Off (Off is default)	
Isolation voltage	250V (continuous), basic(1) insulation type, outputs to backplane. 125V (continuous), basic insulation type, outputs group to group. No isolation between individual outputs.	
Module keying	Electronic, software configurable	
Fusing	Not protected. A fused IFM can be used to help protect outputs. See publication 1492-TD008. However, the ControlLogix system has been agency certified using only the ControlLogix RTBs, that is, 1756-TBCH, 1756-TBNH, 1756-TBSH, and 1756-TBS6H. Any application that requires agency certification of the ControlLogix system that uses other wiring termination methods can require application-specific approval by the certifying agency.	
Removable terminal block	1756-TBCH 1756-TBS6H	1756-TBCHXT 1756-TBS6HXT
RTB keying	User-defined mechanical	
Slot width	1	
Wire category	1(2)	
Wire size	1756-TBCH	1756-TBCHXT
	Single wire connection: 0.33...2.1 mm^2 (22...14 AWG) solid or stranded copper wire rated at 105 °C (221 °F), or greater, 1.2 mm (3/64 in.) insulation max. Do not wire more than one conductor on any single terminal. Double wire connection: 0.33...1.3 mm^2 (22...16 AWG) solid or stranded copper wire rated at 105 °C (221 °F), or greater, 1.2 mm (3/64 in.) insulation max. Do not wire more than two conductors on any single terminal.	
	1756-TBS6H	1756-TBS6HXT
	Single wire connection: 0.33...2.1 mm^2 (22...14 AWG) solid or stranded shielded copper wire rated at 105 °C (221 °F), or greater, 1.2 mm (3/64 in.) insulation max.	
Terminal block torque specs	1756-TBCH, 1756-TBCHXT 0.5 N•m (4.4 lb•in)	
Enclosure type	None (open-style)	
Temperature code	T4	

(1) Per IEC 61010-1 terminology, the insulation type is basic. Per older UL508 terminology, the insulation type is reinforced.
(2) Use this conductor category information for planning conductor routing as described in the system-level installation manual. See the Industrial Automation Wiring and Grounding Guidelines, publication 1770-4.1.

Environmental Specifications

Attribute	1756-OB32, 1756-OB32K	1756-OB32XT
Temperature, operating IEC 60068-2-1 (Test Ae, Operating Cold), IEC 60068-2-2 (Test Be, Operating Dry Heat), IEC 60068-2-14 (Test Nb, Operating Thermal Shock)	0...60 °C (32...140 °F)	
Temperature, nonoperating IEC 60068-2-1 (Test Ab, Unpackaged Nonoperating Cold), IEC 60068-2-2 (Test Bb, Unpackaged Nonoperating Dry Heat), IEC 60068-2-14 (Test Na, Unpackaged Nonoperating Thermal Shock)	-40...+85 °C (-40...+185 °F)	
Relative humidity IEC 60068-2-30 (Test dB, Unpackaged Damp Heat)	5...95% noncondensing	
Conformal Coated(1)	Yes	
Corrosive Atmosphere(1) • ASTM B845-97 Method H Accelerated Test (20-Day Exposure)	Severity Level G3(2) per ANSI/ISA 71.04-2013, Airborne Contaminants—Gases Severity Level CX(2)(3) per IEC 60721-3-3:2019, Chemically Active Substances	–
Corrosive Atmosphere • ASTM B845-97 Method K Accelerated Test (30-Day Exposure) • Plus additional Rockwell Automation proprietary accelerated corrosive environment test protocol for specific industries with sources of gaseous sulfur compounds.	–	Severity Level GX(4)(5) per ANSI/ISA 71.04-2013, Airborne Contaminants—Gases Severity Level CX(4) per IEC 60721-3-3:2019, Chemically Active Substances
Vibration IEC 60068-2-6 (Test Fc, Operating)	2 g @ 10...500 Hz	
Shock, operating IEC 60068-2-27 (Test Ea, Unpackaged Shock)	30 g	
Shock, nonoperating IEC 60068-2-27 (Test Ea, Unpackaged Shock)	50 g	
Emissions	IEC 61000-6-4	
ESD immunity IEC 61000-4-2	6 kV contact discharges 8 kV air discharges	
Radiated RF immunity IEC 61000-4-3	10V/m with 1 kHz sine wave 80% AM from 80...2000 MHz 10V/m with 200 Hz 50% Pulse 100% AM @ 900 MHz 10V/m with 200 Hz 50% Pulse 100% AM @ 1890 MHz 3V/m with 1 kHz sine wave 80% AM from 2000...2700 MHz	
EFT/B immunity IEC 61000-4-4	±4 kV at 5 kHz on signal ports	
Surge transient immunity IEC 61000-4-5	±1 kV line-line (DM) and ±2 kV line-earth (CM) on signal ports	
Conducted RF immunity IEC 61000-4-6	10V rms with 1 kHz sine wave 80% AM from 150 kHz...80 MHz	

(1) Only applicable to modules that end with a 'K' or 'XT'.
(2) The module and the corresponding RTB must remain installed at all times and the RTB door must remain closed, for the product to maintain its corrosive atmosphere rating.
(3) Up to 9.6 microns per year, corrosion rate of copper.
(4) Port plugs/covers must remain installed in unused ports at all times, once the XT packaging seal is broken, for the product to maintain its corrosive atmosphere rating.
(5) Up to 2100 angstroms of film growth per 30 days of copper and/or silver reactivity.

Certifications

Certification[1]	1756-OB32, 1756-OB32K, 1756-OB32XT
cULus	UL Listed Industrial Control Equipment, certified for US and Canada. See UL File E65584. UL Listed for Class I, Division 2 Group A,B,C,D Hazardous Locations, certified for U.S. and Canada. See UL File E194810.
CE	European Union 2014/30/EU EMC Directive, compliant with: • EN 61326-1; Meas./Control/Lab., Industrial Requirements • EN 61000-6-2; Industrial Immunity • EN 61000-6-4; Industrial Emissions • EN 61131-2; Programmable Controllers (Clause 8, Zone A & B) European Union 2014/35/EU LVD, compliant with EN 61131-2; Programmable Controllers (Clause 11)
RCM	Australian Radiocommunications Act, compliant with EN 61000-6-4; Industrial Emissions
Ex	European Union 2014/34/EU ATEX Directive, compliant with: • EN IEC 60079-0: Explosive atmospheres - Part 0: Equipment - General requirements • EN IEC 60079-7: Explosive atmospheres – Part 7: Equipment protection by increased safety "e" • II 3 G Ex ec IIC T4 Gc • UL22ATEX2820X
IECEx	IECEx System, compliant with: • IEC 60079-0: Explosive atmospheres - Part 0: Equipment - General requirements • IEC 60079-7: Explosive atmospheres – Part 7: Equipment protection by increased safety "e" • II 3 G Ex ec IIC T4 Gc • IECEx UL 22.0065X
UKex	In conformity with the following UKex Statutory Instruments and their amendments: • Schedule 1 of the UKEX Regulation 2016 No. 1107 • Equipment protection by increased safety "e", reference certificate number UL22UKEX2602X • Zone 2 classification according to UKEX Regulation 2016 No. 1107
FM	FM Approved Equipment for use in Class I Division 2 Group A,B,C,D Hazardous Locations
KC	Korean Registration of Broadcasting and Communications Equipment, compliant with Article 58-2 of Radio Waves Act, Clause 3
UKCA	In conformity with the following UK Statutory Instruments and their amendments: • 2016 No. 1091, Electromagnetic Compatibility Regulations • 2016 No. 1101, Electrical Equipment (Safety) Regulations • 2016 No. 1107, Equipment and Protective Systems Intended for Use in Potentially Explosive Atmospheres Regulations • 2012 No. 3032, Restriction of the Use of Certain Hazardous Substances in Electrical and Electronic Equipment
Morocco	In conformity with the following regulations: • Arrêté ministériel n° 6404-15 du 1 er muharram 1437 (15 octobre 2015) Équipements électriques destinés à être utilisés sous certaines limites de tension • Arrêté ministériel n° 6404-15 du 29 ramadan 1436 (16 juillet 2015) Compatibilité électromagnétique des équipements
CCC	CCC 2020122309111998 CNCA-C23-01 强制性产品认证实施规则 防爆电气 CNCA-C23-01 CCC Implementation Rule Explosion-Proof Electrical Products

(1) When product is marked. See the Product Certification link at rok.auto/certifications for Declarations of Conformity, Certificates, and other certification details.

1756-OC8, 1756-OC8K

ControlLogix DC (30...60V) output module

Simplified Schematic

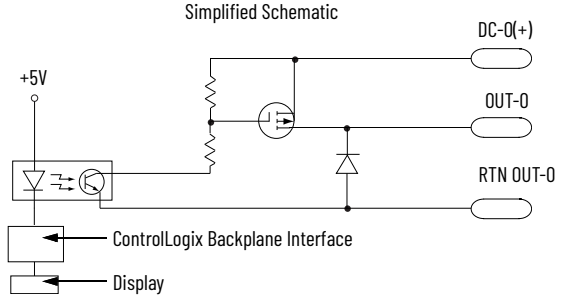

1756-OC8

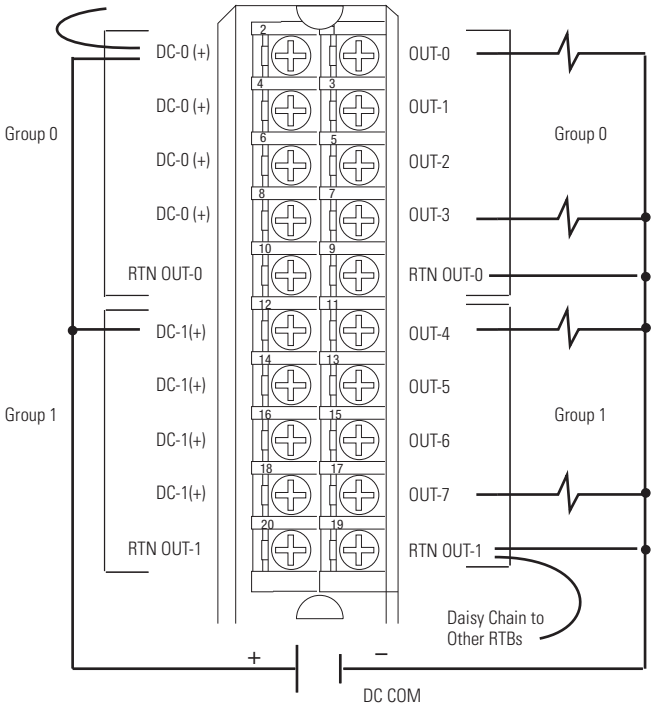

Surge Current Chart

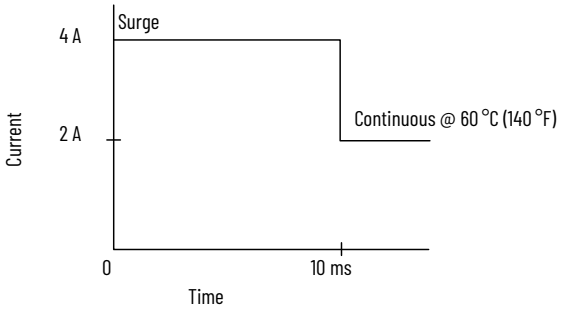

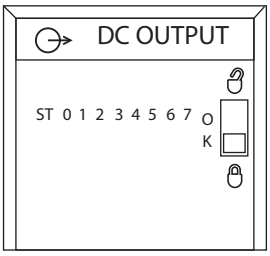

Technical Specifications

Attribute	1756-OC8, 1756-OC8K
Outputs	8 (4 points/group)
Pilot duty	2 A
Voltage category	48V DC source
Operating voltage range	30...60V DC
Output delay time Off to On On to Off	 1 ms, max 2 ms, max
Current draw @ 5.1V	165 mA
Current draw @ 24V	2 mA
Total backplane power	0.89 W
Power dissipation, max	4.9 W @ 60 °C (140 °F)
Thermal dissipation	16.71 BTU/hr
Off-state leakage current, max	1 mA per point
On-state voltage drop, max	2V DC @ 2 A
Current per point, max	2 A @ 60 °C (140 °F)
Current per module, max	8 A @ 60 °C (140 °F)
Surge current per point	4 A for 10 ms per point, repeatable every 1 s @ 60 °C (140 °F)
Load current, min	2 mA per point
Scheduled outputs	Synchronization within 16.7 s max, reference to the Coordinated System Time
States in Fault mode per point	Hold last state, On or Off (Off is default)
States in Program mode per point	Hold last state, On or Off (Off is default)
Isolation voltage	250V (continuous), basic insulation type, outputs-to-backplane, and output group-to-group No isolation between individual group outputs
Module keying	Electronic, software configurable
Fusing	Not protected. A fused IFM is recommended to help protect outputs
Removable terminal block	1756-TBNH 1756-TBSH
RTB keying	User-defined mechanical
Slot width	1
Wire category	1(1)
Enclosure type	None (open-style)
Temperature code	T4

(1) Use this conductor category information for planning conductor routing as described in the system-level installation manual. See the Industrial Automation Wiring and Grounding Guidelines, publication 1770-4.1.

Environmental Specifications

Attribute	1756-OC8, 1756-OC8K
Temperature, operating IEC 60068-2-1 (Test Ae, Operating Cold), IEC 60068-2-2 (Test Be, Operating Dry Heat), IEC 60068-2-14 (Test Nb, Operating Thermal Shock)	0...60 °C (32...140 °F)
Temperature, nonoperating IEC 60068-2-1 (Test Ab, Unpackaged Nonoperating Cold), IEC 60068-2-2 (Test Bb, Unpackaged Nonoperating Dry Heat), IEC 60068-2-14 (Test Na, Unpackaged Nonoperating Thermal Shock)	-40...+85 °C (-40...+185 °F)
Relative humidity IEC 60068-2-30 (Test dB, Unpackaged Damp Heat)	5...95% noncondensing
Vibration IEC 60068-2-6 (Test Fc, Operating)	2 g @ 10...500 Hz
Shock, operating IEC 60068-2-27 (Test Ea, Unpackaged Shock)	30 g
Shock, nonoperating IEC 60068-2-27 (Test Ea, Unpackaged Shock)	50 g
Emissions	IEC 61000-6-4
ESD immunity IEC 61000-4-2	6 kV contact discharges 8 kV air discharges
Radiated RF immunity IEC 61000-4-3	10V/m with 1 kHz sine wave 80% AM from 80...2000 MHz 10V/m with 200 Hz 50% Pulse 100% AM @ 900 MHz 10V/m with 200 Hz 50% Pulse 100% AM @ 1890 MHz 3V/m with 1 kHz sine wave 80% AM from 2000...2700 MHz
EFT/B immunity IEC 61000-4-4	±4 kV at 5 kHz on signal ports
Surge transient immunity IEC 61000-4-5	±1 kV line-line (DM) and ±2 kV line-earth (CM) on signal ports
Conducted RF immunity IEC 61000-4-6	10V rms with 1 kHz sine wave 80% AM from 150 kHz...80 MHz

Certifications

Certification[1]	1756-OC8, 1756-OC8K
cULus	UL Listed Industrial Control Equipment, certified for US and Canada. See UL File E65584. UL Listed for Class I, Division 2 Group A,B,C,D Hazardous Locations, certified for U.S. and Canada. See UL File E194810.
CE	European Union 2014/30/EU EMC Directive, compliant with: • EN 61326-1; Meas./Control/Lab., Industrial Requirements • EN 61000-6-2; Industrial Immunity • EN 61000-6-4; Industrial Emissions • EN 61131-2; Programmable Controllers (Clause 8, Zone A & B) European Union 2014/35/EU LVD, compliant with EN 61131-2; Programmable Controllers (Clause 11)
RCM	Australian Radiocommunications Act, compliant with EN 61000-6-4; Industrial Emissions
Ex	European Union 2014/34/EU ATEX Directive, compliant with: • EN IEC 60079-0: Explosive atmospheres - Part 0: Equipment - General requirements • EN IEC 60079-7: Explosive atmospheres – Part 7: Equipment protection by increased safety "e" • II 3 G Ex ec IIC T4 Gc • UL22ATEX2820X
IECEx	IECEx System, compliant with: • IEC 60079-0: Explosive atmospheres - Part 0: Equipment - General requirements • IEC 60079-7: Explosive atmospheres – Part 7: Equipment protection by increased safety "e" • II 3 G Ex ec IIC T4 Gc • IECEx UL 22.0065X
UKex	In conformity with the following UKex Statutory Instruments and their amendments: • Schedule 1 of the UKEX Regulation 2016 No. 1107 • Equipment protection by increased safety "e", reference certificate number UL22UKEX2602X • Zone 2 classification according to UKEX Regulation 2016 No. 1107
FM	FM Approved Equipment for use in Class I Division 2 Group A,B,C,D Hazardous Locations
KC	Korean Registration of Broadcasting and Communications Equipment, compliant with Article 58-2 of Radio Waves Act, Clause 3
UKCA	In conformity with the following UK Statutory Instruments and their amendments: • 2016 No. 1091, Electromagnetic Compatibility Regulations • 2016 No. 1101, Electrical Equipment (Safety) Regulations • 2016 No. 1107, Equipment and Protective Systems Intended for Use in Potentially Explosive Atmospheres Regulations • 2012 No. 3032, Restriction of the Use of Certain Hazardous Substances in Electrical and Electronic Equipment
Morocco	In conformity with the following regulations: • Arrêté ministériel n° 6404-15 du 1 er muharram 1437 (15 octobre 2015) Équipements électriques destinés à être utilisés sous certaines limites de tension • Arrêté ministériel n° 6404-15 du 29 ramadan 1436 (16 juillet 2015) Compatibilité électromagnétique des équipements
CCC	CCC 2020122309111998 CNCA-C23-01 强制性产品认证实施规则 防爆电气 CNCA-C23-01 CCC Implementation Rule Explosion-Proof Electrical Products

(1) When product is marked. See the Product Certification link at rok.auto/certifications for Declarations of Conformity, Certificates, and other certification details.

1756-OG16, 1756-OG16K

ControlLogix TTL output module

1756-OG16 Standard Wiring

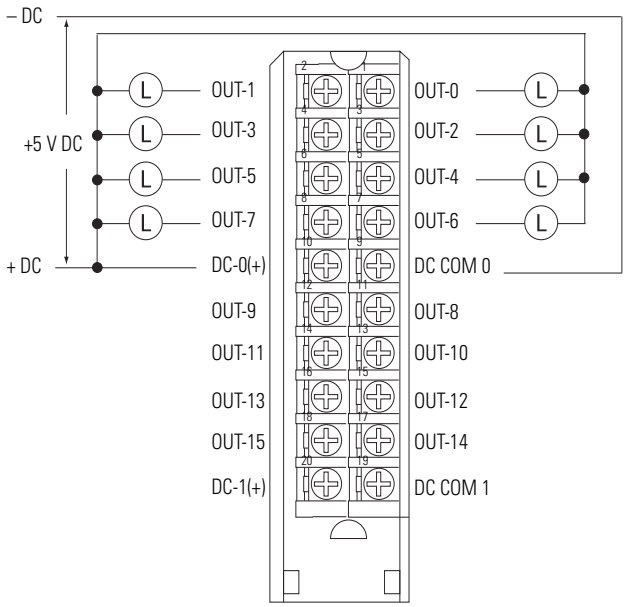

1756-OG16 CE Compliant Wiring

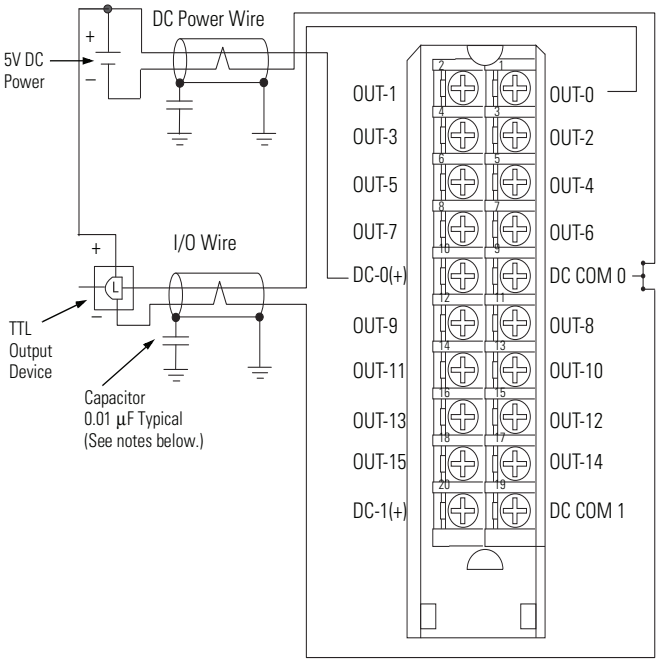

Simplified Schematic

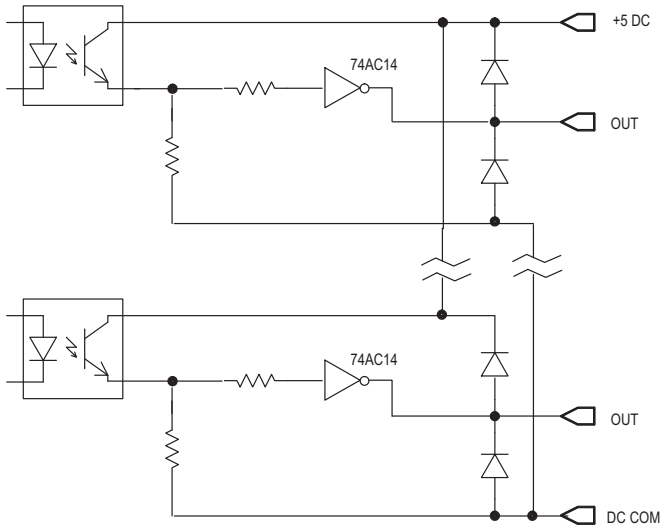

IMPORTANT: I/O cables must be shielded type and cable length must be <10 m (32.8 ft) for maximum EMI noise immunity.

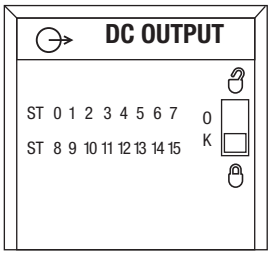

Low to True Format - 1756-OG16, 1756-OG16K

- 0...0.4V DC = Output guaranteed to be in on-state
- 0.4...4.5V DC = Output state not guaranteed
- 4.5...5.5V DC = Output guaranteed to be in off-state

Technical Specifications

Attribute	1756-OG16, 1756-OG16K
Outputs	16 (8 points/group)
Voltage category	5V DC TTL (Low=True)[1]
Operating voltage range	4.5...5.5V DC source, 50 mV P-P ripple max
Output delay time (resistive load) Off to On (5V-to-0V DC transition) On to Off (0V-to-5V DC transition)	 45 µs nom/450 µs max 145 µs nom/700 µs max
Current draw @ 5.1V	210 mA
Current draw @ 24V	2 mA
Total backplane power	1.12 W
Power dissipation, max	1.5 W @ 60 °C (140 °F)
Thermal dissipation	5.2 BTU/hr @ 60 °C (140 °F)
Off-state leakage current per point, max	0.1 mA per point
On-state voltage drop, max	0.4V DC
Continuous current, max	24 mA
Load current per point, max	24 mA
Load current per module, max	384 mA
Load current	0.15 mA
Scheduled outputs	Synchronization within 16.7 s max, reference to the Coordinated System Time
States in Fault mode per point	Hold last state, On or Off (Off is default)
States in Program mode per point	Hold last state, On or Off (Off is default)
Isolation voltage	250V (continuous), basic insulation type, outputs-to-backplane, and output group-to-group No isolation between individual group outputs
Module keying	Electronic, software configurable
Fusing	Not protected. A fused IFM is recommended to help protect outputs.
Removable terminal block	1756-TBNH 1756-TBSH
RTB keying	User-defined mechanical
Slot width	1
Wire category	2[2]
Enclosure type	None (open-style)
Temperature code	T4

(1) TTL outputs are inverted (0 to +0.4V DC = low voltage = True = On.) Use a NOT instruction in your program to convert to traditional True - High logic.
(2) Use this conductor category information for planning conductor routing as described in the system-level installation manual. See the Industrial Automation Wiring and Grounding Guidelines, publication 1770-4.1.

Environmental Specifications

Attribute	1756-OG16, 1756-OG16K
Temperature, operating IEC 60068-2-1 (Test Ae, Operating Cold), IEC 60068-2-2 (Test Be, Operating Dry Heat), IEC 60068-2-14 (Test Nb, Operating Thermal Shock)	0...60 °C (32...140 °F)
Temperature, nonoperating IEC 60068-2-1 (Test Ab, Unpackaged Nonoperating Cold), IEC 60068-2-2 (Test Bb, Unpackaged Nonoperating Dry Heat), IEC 60068-2-14 (Test Na, Unpackaged Nonoperating Thermal Shock)	-40...+85 °C (-40...+185 °F)
Relative humidity IEC 60068-2-30 (Test dB, Unpackaged Damp Heat)	5...95% noncondensing
Vibration IEC 60068-2-6 (Test Fc, Operating)	2 g @ 10...500 Hz
Shock, operating IEC 60068-2-27 (Test Ea, Unpackaged Shock)	30 g
Shock, nonoperating IEC 60068-2-27 (Test Ea, Unpackaged Shock)	50 g
Emissions	IEC 61000-6-4
ESD immunity IEC 61000-4-2	6 kV contact discharges 8 kV air discharges
Radiated RF immunity IEC 61000-4-3	10V/m with 1 kHz sine wave 80% AM from 80...2000 MHz 10V/m with 200 Hz 50% Pulse 100% AM @ 900 MHz 10V/m with 200 Hz 50% Pulse 100% AM @ 1890 MHz 3V/m with 1 kHz sine wave 80% AM from 2000...2700 MHz
EFT/B immunity IEC 61000-4-4	±4 kV at 5 kHz on signal ports
Conducted RF immunity IEC 61000-4-6	10V rms with 1 kHz sine wave 80% AM from 150 kHz...80 MHz

Certifications

Certification[1]	1756-OG16, 1756-OG16K
cULus	UL Listed Industrial Control Equipment, certified for US and Canada. See UL File E65584. UL Listed for Class I, Division 2 Group A,B,C,D Hazardous Locations, certified for U.S. and Canada. See UL File E194810.
CE	European Union 2014/30/EU EMC Directive, compliant with: • EN 61326-1; Meas./Control/Lab., Industrial Requirements • EN 61000-6-2; Industrial Immunity • EN 61000-6-4; Industrial Emissions • EN 61131-2; Programmable Controllers (Clause 8, Zone A & B)
RCM	Australian Radiocommunications Act, compliant with EN 61000-6-4; Industrial Emissions
Ex	European Union 2014/34/EU ATEX Directive, compliant with: • EN IEC 60079-0: Explosive atmospheres - Part 0: Equipment - General requirements • EN IEC 60079-7: Explosive atmospheres – Part 7: Equipment protection by increased safety "e" • II 3 G Ex ec IIC T4 Gc • UL22ATEX2820X
IECEx	IECEx System, compliant with: • IEC 60079-0: Explosive atmospheres - Part 0: Equipment - General requirements • IEC 60079-7: Explosive atmospheres – Part 7: Equipment protection by increased safety "e" • II 3 G Ex ec IIC T4 Gc • IECEx UL 22.0065X
UKex	In conformity with the following UKex Statutory Instruments and their amendments: • Schedule 1 of the UKEX Regulation 2016 No. 1107 • Equipment protection by increased safety "e", reference certificate number UL22UKEX2602X • Zone 2 classification according to UKEX Regulation 2016 No. 1107
KC	Korean Registration of Broadcasting and Communications Equipment, compliant with Article 58-2 of Radio Waves Act, Clause 3
UKCA	In conformity with the following UK Statutory Instruments and their amendments: • 2016 No. 1091, Electromagnetic Compatibility Regulations • 2016 No. 1101, Electrical Equipment (Safety) Regulations • 2016 No. 1107, Equipment and Protective Systems Intended for Use in Potentially Explosive Atmospheres Regulations • 2012 No. 3032, Restriction of the Use of Certain Hazardous Substances in Electrical and Electronic Equipment
Morocco	In conformity with the following regulations: • Arrêté ministériel n° 6404-15 du 1 er muharram 1437 (15 octobre 2015) Équipements électriques destinés à être utilisés sous certaines limites de tension • Arrêté ministériel n° 6404-15 du 29 ramadan 1436 (16 juillet 2015) Compatibilité électromagnétique des équipements
CCC	CCC 2020122309111998 CNCA-C23-01 强制性产品认证实施规则 防爆电气 CNCA-C23-01 CCC Implementation Rule Explosion-Proof Electrical Products

(1) When product is marked. See the Product Certification link at rok.auto/certifications for Declarations of Conformity, Certificates, and other certification details.

1756-OH8I

ControlLogix DC (90...146V) isolated output module

Simplified Schematic

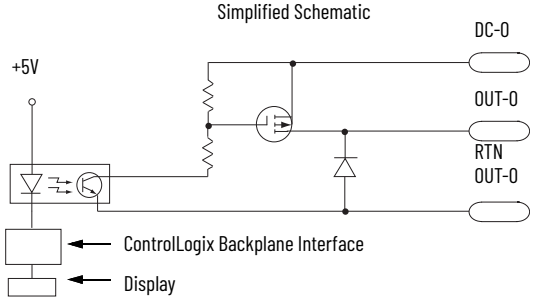

Surge Current Chart

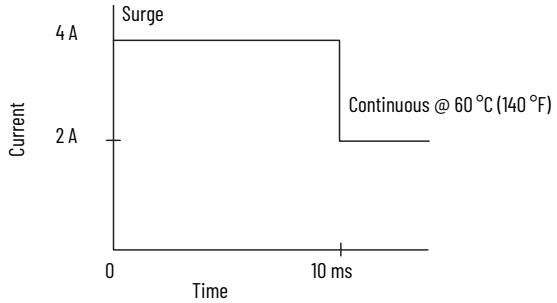

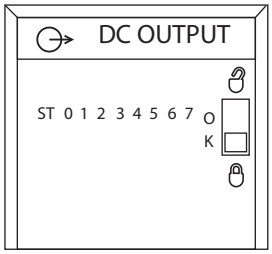

1756-OH8I

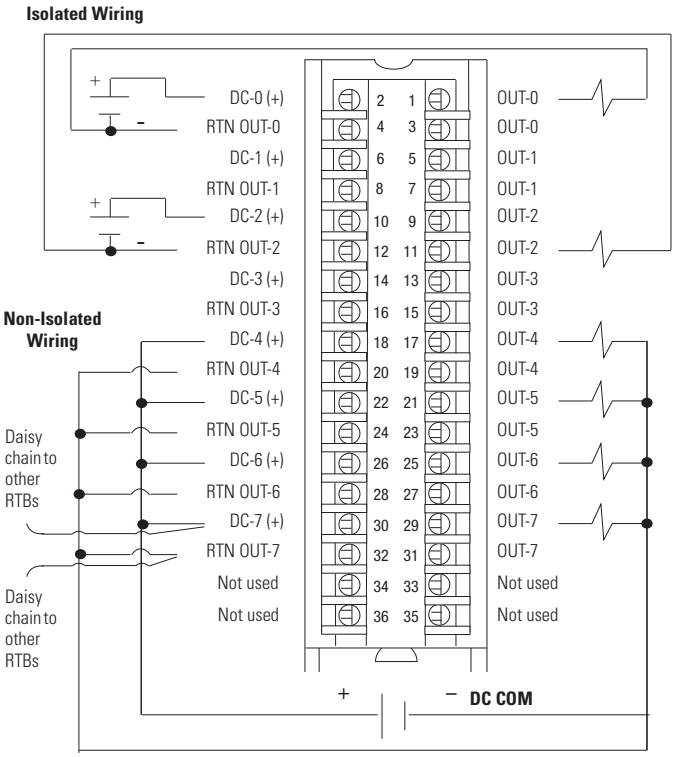

Technical Specifications

Attribute	1756-OH8I
Outputs	8 individually isolated
Voltage category	125V DC sink/source
Operating voltage range	90...146V DC
Output delay time Off to On On to Off	 2 ms max 2 ms max
Current draw @ 5.1V	210 mA
Current draw @ 24V	2 mA
Total backplane power	1.11 W
Power dissipation, max	3.3 W @ 60 °C (140 °F)
Thermal dissipation	11.25 BTU/hr
Off-state leakage current, max	1 mA per point
On-state voltage drop, max	2V DC @ 2 A
Current per point, max	2 A @ 60 °C (140 °F)
Current per module, max	8 A @ 60 °C (140 °F)
Surge current per point	4 A for 10 ms per point, repeatable every 1 s @ 60 °C (140 °F)
Load current, min	2 mA per point
Scheduled outputs	Synchronization within 16.7 s max, reference to the Coordinated System Time
States in Fault mode per point	Hold last state, On or Off (Off is default)
States in Program mode per point	Hold last state, On or Off (Off is default)
Isolation voltage	250V (continuous), basic insulation type, outputs-to-backplane, and output-to-output
Module keying	Electronic, software configurable
Fusing	Not protected. A fused IFM is recommended to help protect outputs.
Removable terminal block	1756-TBCH 1756-TBS6H
RTB keying	User-defined mechanical
Slot width	1
Wire category	1(1)
Enclosure type	None (open-style)
North American temperature code	T4A

(1) Use this conductor category information for planning conductor routing as described in the system-level installation manual. See the Industrial Automation Wiring and Grounding Guidelines, publication 1770-4.1.

Environmental Specifications

Attribute	1756-OH8I
Temperature, operating IEC 60068-2-1 (Test Ae, Operating Cold), IEC 60068-2-2 (Test Be, Operating Dry Heat), IEC 60068-2-14 (Test Nb, Operating Thermal Shock)	0...60 °C (32...140 °F)
Temperature, nonoperating IEC 60068-2-1 (Test Ab, Unpackaged Nonoperating Cold), IEC 60068-2-2 (Test Bb, Unpackaged Nonoperating Dry Heat), IEC 60068-2-14 (Test Na, Unpackaged Nonoperating Thermal Shock)	-40...+85 °C (-40...+185 °F)
Relative humidity IEC 60068-2-30 (Test dB, Unpackaged Damp Heat)	5...95% noncondensing
Vibration IEC 60068-2-6 (Test Fc, Operating)	2 g @ 10...500 Hz
Shock, operating IEC 60068-2-27 (Test Ea, Unpackaged Shock)	30 g
Shock, nonoperating IEC 60068-2-27 (Test Ea, Unpackaged Shock)	50 g
Emissions	IEC 61000-6-4
ESD immunity IEC 61000-4-2	6 kV contact discharges 8 kV air discharges
Radiated RF immunity IEC 61000-4-3	10V/m with 1 kHz sine wave 80% AM from 80...2000 MHz 10V/m with 200 Hz 50% Pulse 100% AM @ 900 MHz 10V/m with 200 Hz 50% Pulse 100% AM @ 1890 MHz 1V/m with 1 kHz sine wave 80% AM from 2000...2700 MHz
EFT/B immunity IEC 61000-4-4	±4 kV at 5 kHz on signal ports
Surge transient immunity IEC 61000-4-5	±1 kV line-line (DM) and ±2 kV line-earth (CM) on signal ports
Conducted RF immunity IEC 61000-4-6	10V rms with 1 kHz sine wave 80% AM from 150 kHz...80 MHz

Certifications

Certification(1)	1756-OH8I
cULus	UL Listed Industrial Control Equipment, certified for US and Canada. See UL File E65584. UL Listed for Class I, Division 2 Group A,B,C,D Hazardous Locations, certified for U.S. and Canada. See UL File E194810.
CE	European Union 2014/30/EU EMC Directive, compliant with: • EN 61326-1; Meas./Control/Lab., Industrial Requirements • EN 61000-6-2; Industrial Immunity • EN 61000-6-4; Industrial Emissions • EN 61131-2; Programmable Controllers (Clause 8, Zone A & B) European Union 2014/35/EU LVD, compliant with EN 61131-2; Programmable Controllers (Clause 11)
RCM	Australian Radiocommunications Act, compliant with EN 61000-6-4; Industrial Emissions
FM	FM Approved Equipment for use in Class I Division 2 Group A,B,C,D Hazardous Locations
KC	Korean Registration of Broadcasting and Communications Equipment, compliant with Article 58-2 of Radio Waves Act, Clause 3
UKCA	In conformity with the following UK Statutory Instruments and their amendments: • 2016 No. 1091, Electromagnetic Compatibility Regulations • 2016 No. 1101, Electrical Equipment (Safety) Regulations • 2016 No. 1107, Equipment and Protective Systems Intended for Use in Potentially Explosive Atmospheres Regulations • 2012 No. 3032, Restriction of the Use of Certain Hazardous Substances in Electrical and Electronic Equipment
Morocco	In conformity with the following regulations: • Arrêté ministériel n° 6404-15 du 1 er muharram 1437 (15 octobre 2015) Équipements électriques destinés à être utilisés sous certaines limites de tension • Arrêté ministériel n° 6404-15 du 29 ramadan 1436 (16 juillet 2015) Compatibilité électromagnétique des équipements

(1) When product is marked. See the Product Certification link at rok.auto/certifications for Declarations of Conformity, Certificates, and other certification details.

1756-OV16E

ControlLogix DC (10...30V) electronically fused, sinking output module

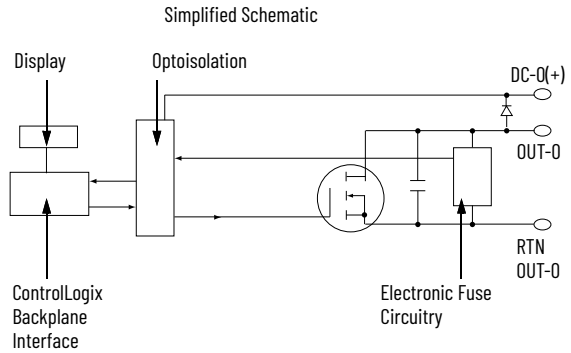

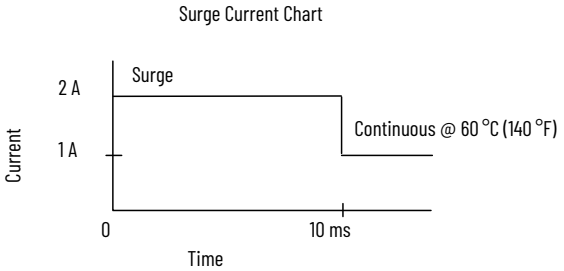

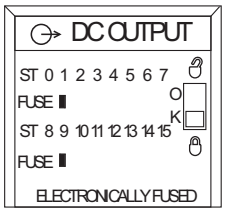

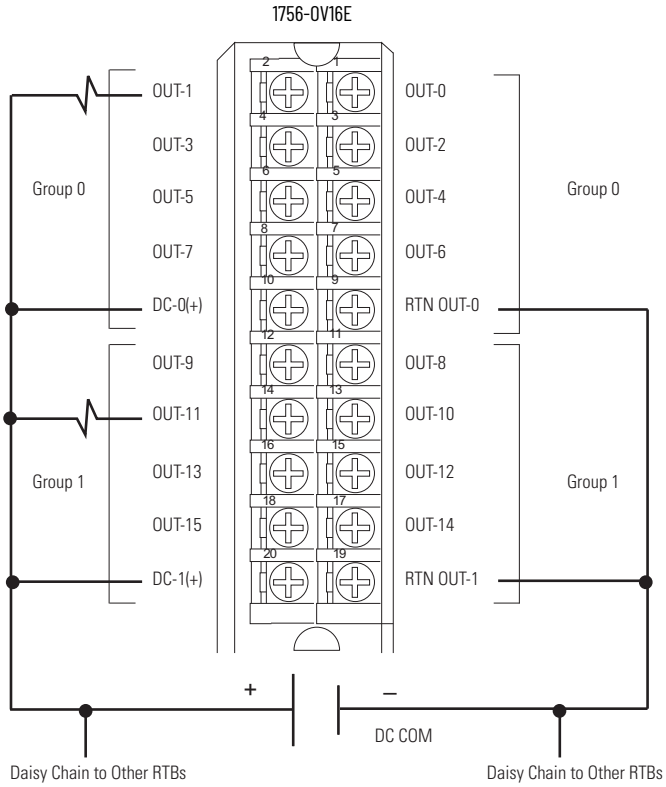

Diagnostic Specifications

Attribute	1756-OV16E
Short trip	5 A for 20 ms @ 24V DC (output on, then short) 5 A for 20 ms @ 24V DC (output on into short)
Time stamp of diagnostics	±1 ms

Technical Specifications

Attribute	1756-OV16E
Outputs	16 electronically fused (8 points/group)
Pilot duty	1 A (DC-13/SR)
Voltage category	12/24V DC sink
Output delay time Off to On On to Off	 75 µs nom/1 ms max 360 µs nom/1 ms max
Operating voltage range	10...30V DC
Current draw @ 5.1V	210 mA
Current draw @ 24V	2 mA
Total backplane power	1.12 W
Power dissipation, max	6.72 W @ 60 °C (140 °F)
Thermal dissipation	22.94 BTU/hr
Off-state leakage current per point, max	1 mA per point
On-state voltage drop, max	700 mV DC @ 1 A
Current per point, max	1 A @ 60 °C (140 °F)
Current per module, max	8 A @ 60 °C (140 °F)
Surge current per point	2 A for 10 ms per Point, repeatable every 2 s @ 60 °C (140 °F)
Load current, min	2 mA per point
Scheduled outputs	Synchronization within 16.7 s max, reference to the Coordinated System Time
States in Fault mode per point	Hold last state, On or Off (Off is default)
States in Program mode per point	Hold last state, On or Off (Off is default)
Isolation voltage	250V (continuous), basic insulation type, outputs-to-backplane, and output group-to-group No isolation between individual group outputs
Module keying	Electronic, software configurable
Fusing	Electronically fused per group
Removable terminal block	1756-TBNH 1756-TBSH
RTB keying	User-defined mechanical
Slot width	1
Wire category	1(1)
Enclosure type	None (open-style)
Temperature code	T4

(1) Use this conductor category information for planning conductor routing as described in the system-level installation manual. See the Industrial Automation Wiring and Grounding Guidelines, publication 1770-4.1.

Environmental Specifications

Attribute	1756-OV16E
Temperature, operating IEC 60068-2-1 (Test Ae, Operating Cold), IEC 60068-2-2 (Test Be, Operating Dry Heat), IEC 60068-2-14 (Test Nb, Operating Thermal Shock)	0...60 °C (32...140 °F)
Temperature, nonoperating IEC 60068-2-1 (Test Ab, Unpackaged Nonoperating Cold), IEC 60068-2-2 (Test Bb, Unpackaged Nonoperating Dry Heat), IEC 60068-2-14 (Test Na, Unpackaged Nonoperating Thermal Shock)	-40...+85 °C (-40...+185 °F)
Relative humidity IEC 60068-2-30 (Test dB, Unpackaged Damp Heat)	5...95% noncondensing
Vibration IEC 60068-2-6 (Test Fc, Operating)	2 g @ 10...500 Hz
Shock, operating IEC 60068-2-27 (Test Ea, Unpackaged Shock)	30 g
Shock, nonoperating IEC 60068-2-27 (Test Ea, Unpackaged Shock)	50 g
Emissions	IEC 61000-6-4
ESD immunity IEC 61000-4-2	6 kV contact discharges 8 kV air discharges
Radiated RF immunity IEC 61000-4-3	10V/m with 1 kHz sine wave 80% AM from 80...2000 MHz 10V/m with 200 Hz 50% Pulse 100% AM @ 900 MHz 10V/m with 200 Hz 50% Pulse 100% AM @ 1890 MHz 3V/m with 1 kHz sine wave 80% AM from 2000...2700 MHz
EFT/B immunity IEC 61000-4-4	±4 kV at 5 kHz on signal ports
Surge transient immunity IEC 61000-4-5	±1 kV line-line (DM) and ±2 kV line-earth (CM) on signal ports
Conducted RF immunity IEC 61000-4-6	10V rms with 1 kHz sine wave 80% AM from 150 kHz...80 MHz

Certifications

Certification[1]	1756-OV16E
cULus	UL Listed Industrial Control Equipment, certified for US and Canada. See UL File E65584. UL Listed for Class I, Division 2 Group A,B,C,D Hazardous Locations, certified for U.S. and Canada. See UL File E194810.
CE	European Union 2014/30/EU EMC Directive, compliant with: • EN 61326-1; Meas./Control/Lab., Industrial Requirements • EN 61000-6-2; Industrial Immunity • EN 61000-6-4; Industrial Emissions • EN 61131-2; Programmable Controllers (Clause 8, Zone A & B) European Union 2014/35/EU LVD, compliant with EN 61131-2; Programmable Controllers (Clause 11)
RCM	Australian Radiocommunications Act, compliant with EN 61000-6-4; Industrial Emissions
Ex	European Union 2014/34/EU ATEX Directive, compliant with: • EN IEC 60079-0: Explosive atmospheres - Part 0: Equipment - General requirements • EN IEC 60079-7: Explosive atmospheres – Part 7: Equipment protection by increased safety "e" • II 3 G Ex ec IIC T4 Gc • UL22ATEX2820X
IECEx	IECEx System, compliant with: • IEC 60079-0: Explosive atmospheres - Part 0: Equipment - General requirements • IEC 60079-7: Explosive atmospheres – Part 7: Equipment protection by increased safety "e" • II 3 G Ex ec IIC T4 Gc • IECEx UL 22.0065X
UKex	In conformity with the following UKex Statutory Instruments and their amendments: • Schedule 1 of the UKEX Regulation 2016 No. 1107 • Equipment protection by increased safety "e", reference certificate number UL22UKEX2602X • Zone 2 classification according to UKEX Regulation 2016 No. 1107
FM	FM Approved Equipment for use in Class I Division 2 Group A,B,C,D Hazardous Locations
KC	Korean Registration of Broadcasting and Communications Equipment, compliant with Article 58-2 of Radio Waves Act, Clause 3
UKCA	In conformity with the following UK Statutory Instruments and their amendments: • 2016 No. 1091, Electromagnetic Compatibility Regulations • 2016 No. 1101, Electrical Equipment (Safety) Regulations • 2016 No. 1107, Equipment and Protective Systems Intended for Use in Potentially Explosive Atmospheres Regulations • 2012 No. 3032, Restriction of the Use of Certain Hazardous Substances in Electrical and Electronic Equipment
Morocco	In conformity with the following regulations: • Arrêté ministériel n° 6404-15 du 1 er muharram 1437 (15 octobre 2015) Équipements électriques destinés à être utilisés sous certaines limites de tension • Arrêté ministériel n° 6404-15 du 29 ramadan 1436 (16 juillet 2015) Compatibilité électromagnétique des équipements
CCC	CCC 2020122309111998 CNCA-C23-01 强制性产品认证实施规则 防爆电气 CNCA-C23-01 CCC Implementation Rule Explosion-Proof Electrical Products

(1) See the Product Certification link at rok.auto/certifications for Declarations of Conformity, Certificates, and other certification details.

1756-OV32E, 1756-OV32EK

ControlLogix DC (10...30V) electronically fused, sinking output module

Simplified Schematic

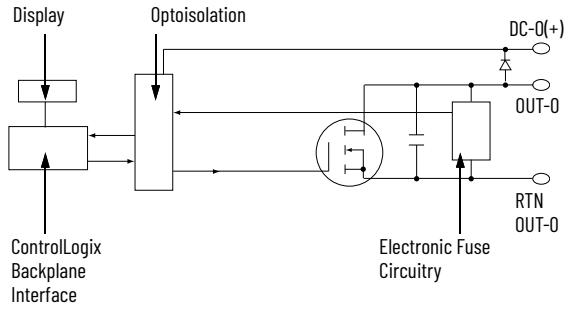

1756-OV32E

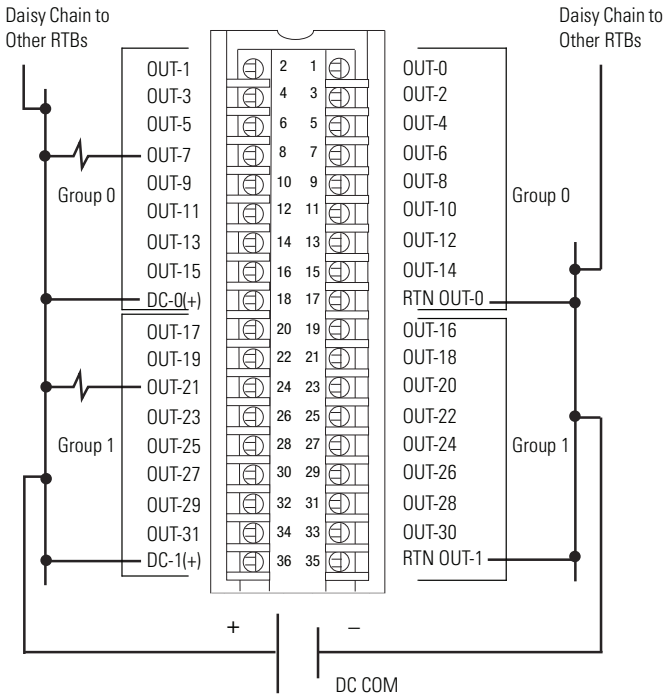

Surge Current Chart

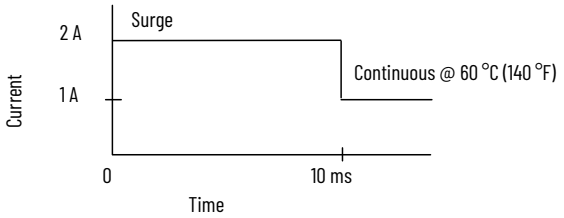

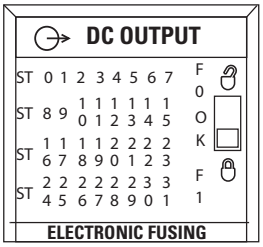

Diagnostic Specifications

Attribute	1756-OV32E, 1756-OV32EK
Short trip	5 A for 20 ms @ 24V DC (output on then short) 5 A for 20 ms @ 24V DC (output into short)
Time stamp of diagnostics	±1 ms

Technical Specifications

Attribute	1756-OV32E, 1756-OV32EK
Outputs	32 electronically fused (16 points/group)
Voltage category	12/24V DC sink
Operating voltage range	10...30V DC
Output delay time (24V to 0V DC transition) Off to On On to Off	 75 µs nom/300 µs max 230 µs nom/1 ms max
Current draw @ 5.1V	390 mA
Current draw @ 24V	2 mA
Total backplane power	2.04 W
Power dissipation, max	5.88 W @ 60 °C (140 °F)
Thermal dissipation	20.1 BTU/hr
Off-state leakage current per point, max	1 mA per point
On-state voltage drop, max	350 mV DC @ 0.5 A
Current per point, max	0.5 A @ 50 °C (122 °F) linear derating 0.35 A @ 60 °C (140 °F)
Current per group, max	8 A @ 50 °C (122 °F) linear derating 5 A @ 60 °C (140 °F)
Current per module, max	16 A @ 50 °C (122 °F) linear derating 10 A @ 60 °C (140 °F)
Surge current per point	2 A for 10 ms per point, repeatable every 2 s @ 60 °C (140 °F)
Load current, min	2 mA per output
Scheduled outputs	Synchronization within 16.7 s max, reference to the Coordinated System Time
States in Fault mode per point	Hold last state, On or Off (Off is default)
States in Program mode per point	Hold last state, On or Off (Off is default)
Isolation voltage	250V (continuous), basic insulation type, outputs-to-backplane, and output group-to-group No isolation between individual group outputs
Module keying	Electronic, software configurable
Fusing	Electronically fused per group
Removable terminal block	1756-TBCH 1756-TBS6H
RTB keying	User-defined mechanical
Slot width	1
Wire category	1(1)
Enclosure type	None (open-style)
Temperature code	T4

(1) Use this conductor category information for planning conductor routing as described in the system-level installation manual. See the Industrial Automation Wiring and Grounding Guidelines, publication 1770-4.1.

Environmental Specifications

Attribute	1756-OV32E, 1756-OV32EK
Temperature, operating IEC 60068-2-1 (Test Ae, Operating Cold), IEC 60068-2-2 (Test Be, Operating Dry Heat), IEC 60068-2-14 (Test Nb, Operating Thermal Shock)	0...60 °C (32...140 °F)
Temperature, nonoperating IEC 60068-2-1 (Test Ab, Unpackaged Nonoperating Cold), IEC 60068-2-2 (Test Bb, Unpackaged Nonoperating Dry Heat), IEC 60068-2-14 (Test Na, Unpackaged Nonoperating Thermal Shock)	-40...+85 °C (-40...+185 °F)
Relative humidity IEC 60068-2-30 (Test dB, Unpackaged Damp Heat)	5...95% noncondensing
Vibration IEC 60068-2-6 (Test Fc, Operating)	2 g @ 10...500 Hz
Shock, operating IEC 60068-2-27 (Test Ea, Unpackaged Shock)	30 g
Shock, nonoperating IEC 60068-2-27 (Test Ea, Unpackaged Shock)	50 g
Emissions	IEC 61000-6-4
ESD immunity IEC 61000-4-2	6 kV contact discharges 8 kV air discharges
Radiated RF immunity IEC 61000-4-3	10V/m with 1 kHz sine wave 80% AM from 80...2000 MHz 10V/m with 200 Hz 50% Pulse 100% AM @ 900 MHz 10V/m with 200 Hz 50% Pulse 100% AM @ 1890 MHz 3V/m with 1 kHz sine wave 80% AM from 2000...2700 MHz
EFT/B immunity IEC 61000-4-4	±4 kV at 5 kHz on signal ports
Surge transient immunity IEC 61000-4-5	±1 kV line-line (DM) and ±2 kV line-earth (CM) on signal ports
Conducted RF immunity IEC 61000-4-6	10V rms with 1 kHz sine wave 80% AM from 150 kHz...80 MHz

Certifications

Certification[1]	1756-OV32E, 1756-OV32EK
cULus	UL Listed Industrial Control Equipment, certified for US and Canada. See UL File E65584. UL Listed for Class I, Division 2 Group A,B,C,D Hazardous Locations, certified for U.S. and Canada. See UL File E194810.
CE	European Union 2014/30/EU EMC Directive, compliant with: • EN 61326-1; Meas./Control/Lab., Industrial Requirements • EN 61000-6-2; Industrial Immunity • EN 61000-6-4; Industrial Emissions • EN 61131-2; Programmable Controllers (Clause 8, Zone A & B) European Union 2014/35/EU LVD, compliant with EN 61131-2; Programmable Controllers (Clause 11)
RCM	Australian Radiocommunications Act, compliant with EN 61000-6-4; Industrial Emissions
Ex	European Union 2014/34/EU ATEX Directive, compliant with: • EN IEC 60079-0: Explosive atmospheres - Part 0: Equipment - General requirements • EN IEC 60079-7: Explosive atmospheres – Part 7: Equipment protection by increased safety "e" • II 3 G Ex ec IIC T4 Gc • UL22ATEX2820X
IECEx	IECEx System, compliant with: • IEC 60079-0: Explosive atmospheres - Part 0: Equipment - General requirements • IEC 60079-7: Explosive atmospheres – Part 7: Equipment protection by increased safety "e" • II 3 G Ex ec IIC T4 Gc • IECEx UL 22.0065X
UKex	In conformity with the following UKex Statutory Instruments and their amendments: • Schedule 1 of the UKEX Regulation 2016 No. 1107 • Equipment protection by increased safety "e", reference certificate number UL22UKEX2602X • Zone 2 classification according to UKEX Regulation 2016 No. 1107
KC	Korean Registration of Broadcasting and Communications Equipment, compliant with Article 58-2 of Radio Waves Act, Clause 3
UKCA	In conformity with the following UK Statutory Instruments and their amendments: • 2016 No. 1091, Electromagnetic Compatibility Regulations • 2016 No. 1101, Electrical Equipment (Safety) Regulations • 2016 No. 1107, Equipment and Protective Systems Intended for Use in Potentially Explosive Atmospheres Regulations • 2012 No. 3032, Restriction of the Use of Certain Hazardous Substances in Electrical and Electronic Equipment
Morocco	In conformity with the following regulations: • Arrêté ministériel n° 6404-15 du 1 er muharram 1437 (15 octobre 2015) Équipements électriques destinés à être utilisés sous certaines limites de tension • Arrêté ministériel n° 6404-15 du 29 ramadan 1436 (16 juillet 2015) Compatibilité électromagnétique des équipements
CCC	CCC 2020122309111998 CNCA-C23-01 强制性产品认证实施规则 防爆电气 CNCA-C23-01 CCC Implementation Rule Explosion-Proof Electrical Products

(1) When product is marked. See the Product Certification link at rok.auto/certifications for Declarations of Conformity, Certificates, and other certification details.

Notes:

1756-IB16S

ControlLogix DC (18...32V) sinking safety input module.

You must connect a 24V DC SELV/PELV power source to the DC+/- terminals to provide field-side power.

IMPORTANT
- The 24V (DC+ and DC-) power connections are used to supply field-side power to the module.
- All terminals with the same name are connected together on the module. For example, DC+ can be connected to either terminal marked DC +.
- Do not physically connect more than two wires to a single RTB terminal.
- All other I/O modules in the same chassis must use an SELV/PELV power supply.
- The 1756-IB16S module is compatible with a series C ControlLogix chassis.
- Do not install the module in a series B ControlLogix chassis.

1756-IB16S Simplified Schematic

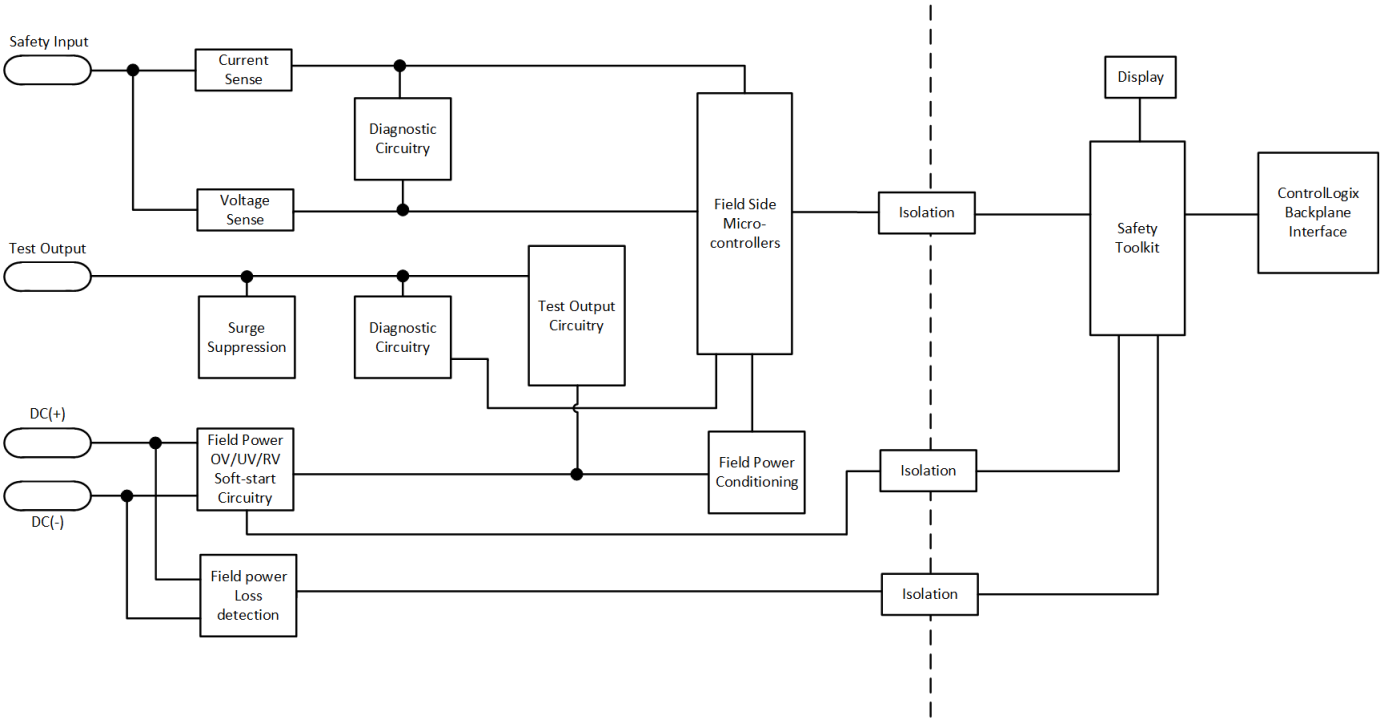

When the module is wired as shown, it is suitable for applications that are rated up to, and including, **Category 2** and **PLd** as defined in ISO 13849-1. To achieve that suitability rating, you may have to perform diagnostic testing of the safety function.

One diagnostic test method is to configure the safety input channel for Safety Pulse Test to test the circuit for short circuits to 24V DC.

Channel Connections
The diagram shows devices that are connected to safety input channel 0 and test output channel 0. You can connect devices to all 16 channels.

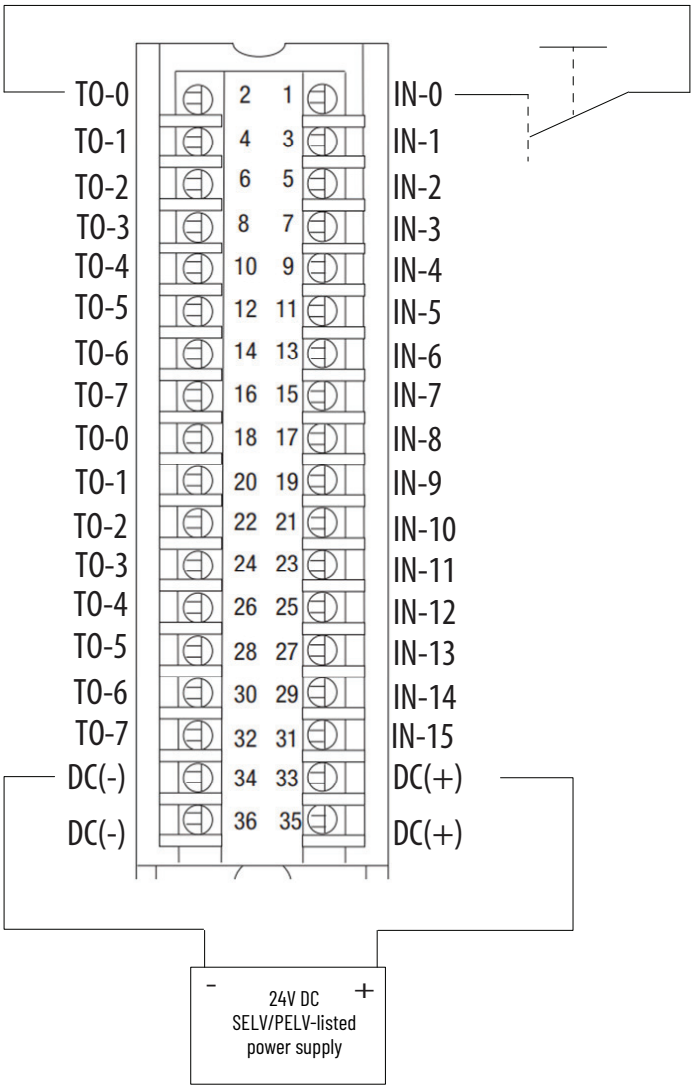

When the module is wired as shown, it is suitable for applications that are rated up to, and including, **Category 3** and **PLd** as defined in ISO 13849-1.

IMPORTANT	Switches are suitable for applications that are rated up to, and including SIL 3 CL3, PLd, Cat 3.

Channel Connections
This diagram shows devices that are connected to safety input channels 0 and 1.
You can connect devices to all 16 channels.

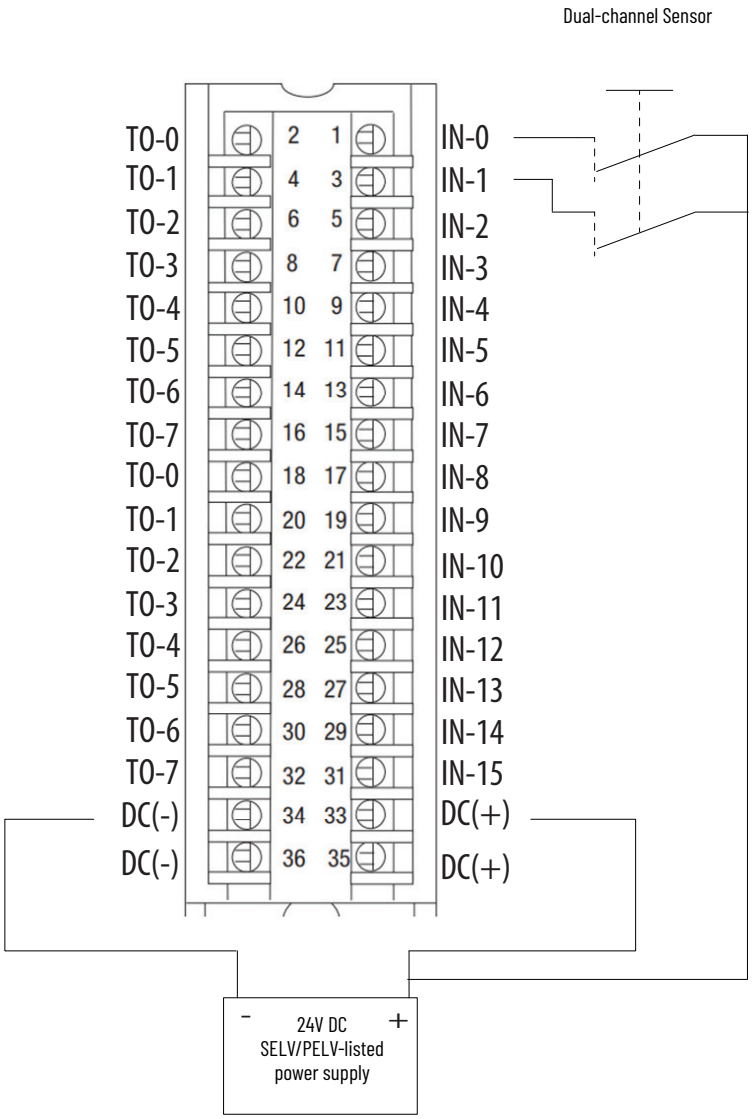

When the module is wired as shown, it is suitable for applications that are rated up to, and including, **Category 4** and **PLe** as defined in ISO 13849-1. To achieve that suitability rating, you may have to perform diagnostic testing of the safety function.

One diagnostic test method is to configure the safety input channel for Safety Pulse Test to test the circuit for short circuits to 24V DC. Safety input pairs must be associated with different Test Output sources.

Channel Connections
This diagram shows devices that are connected to safety input channels 0 and 1; and to test outputs 0 and 1.
You can connect devices to all 16 channels.
Because of the pre-configured relationships between test outputs and input channels, wiring a dual channel device to input channels 0 and 8 is not supported if pulse testing is required, the same holds true for 1/9, 2/10, 3/11, 4/12, 5/13, 6/14, 7/15.

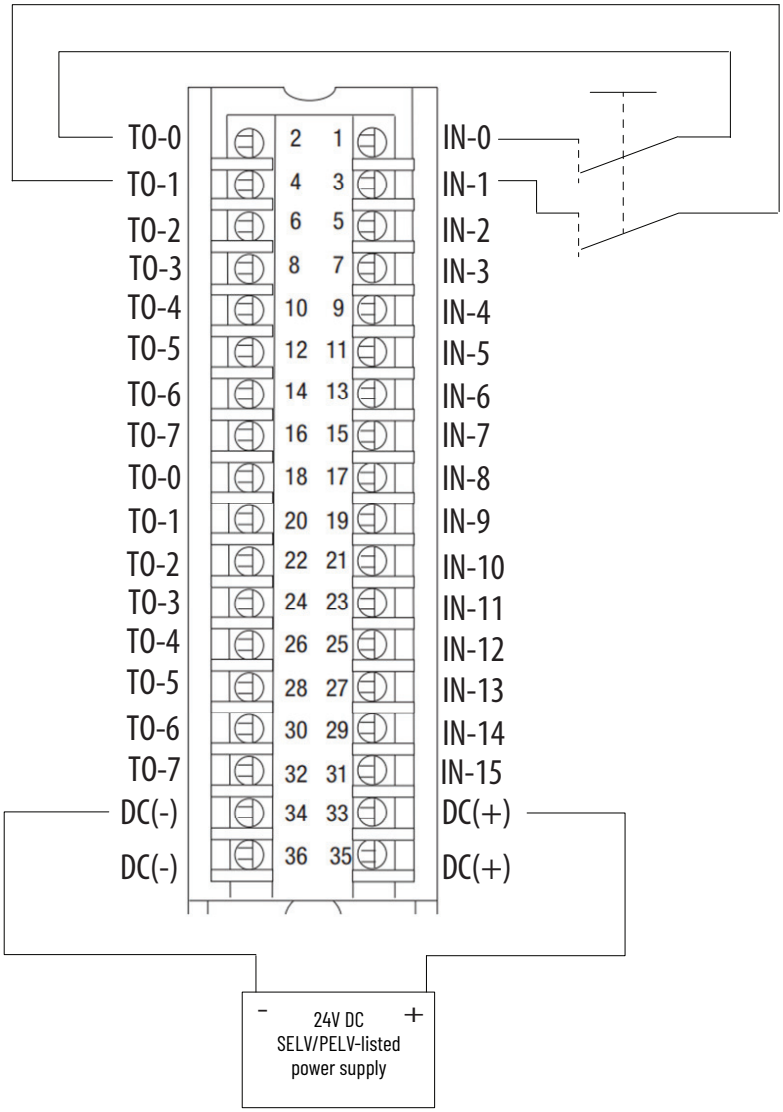

Technical Specifications

Attribute	1756-IB16S
On-state voltage range	10...32V DC
On-state current, @ on-state min voltage	2.4 mA @ 10V
On-state current, @ on-state nom voltage	2.5 mA @ 24V
On-state current, @ on-state max voltage	2.8 mA @ 32V
Off-state voltage, max	5V DC
Off-state current, max	1.5 mA
Input delay time (screw to backplane), max Off to On On to Off	6 ms @ RPI of 2 ms
Safety Integrity Level	Up to and including Cat. 4 / PLe acc. to EN ISO 13849-1, SIL CL 3 acc. to IEC 62061, SIL 3 acc. to IEC 61508. (1)
Safety Reaction Time (SRT)	6 ms @ RPI of 2 ms
Test output current per point	0.2 A

Technical Specifications (Continued)

Attribute	1756-IB16S
Number of test outputs	8
Test output pulse width, max	600 µs
Test output pulse period, typical	100 ms
Test output max field capacitance	100 nF
Test output short circuit protection	Yes
Test output leakage current, max	0.5 mA
Module over-temperature detection	Yes
DC supply reverse voltage protection	Yes
DC supply overvoltage protection, max	60V
Input delay time Off to On, user-selectable filter time On to Off, user-selectable filter time	 0...50 ms 0...50 ms
Timestamp of inputs	No
CIP Sync	Yes

(1) See the 1756 ControlLogix Digital Safety I/O Modules User Manual, publication 1756-UM013, for Safety Application Suitability Levels and Safety Data for Safety I/O Modules.

General Specifications

Attribute	1756-IB16S
Inputs	16 channels (1 group of 16), sinking
Current draw @ 5.1V	280 mA
Total backplane power	1.43 W
Field Power voltage range	18...32V DC SELV/PELV
Field Power current, max	1.8 A SELV/PELV
Input Power, voltage range	10...32V
Input Power current, max	2.5 mA SELV/PELV 150VA
Test Output Power, voltage range	18...32V DC
Test Output Power current, max	200 mA
Power dissipation, max	6 W
Thermal dissipation, max	20.47 BTU/hr
Isolation voltage	60V (continuous), basic insulation type, channels-to-backplane No isolation between DC power and channels No isolation between individual ports
Module keying	Electronic, software configurable
Removable terminal block housing	1756-TBCHS 1756-TBS6HS
RTB keying	User-defined mechanical
Wire category(1)	2 - on power ports
Wire size	1756-TBCHS
	Single wire connection: 0.33...2.1 mm^2 (22...14 AWG) solid or stranded copper wire rated at 105 °C (221 °F), or greater, 1.2 mm (3/64 in.) insulation max. Double wire connection: 0.33...1.3 mm^2 (22...16 AWG) solid or stranded copper wire rated at 105 °C (221 °F), or greater, 1.2 mm (3/64 in.) insulation max.
	1756-TBS6HS
	Single wire connection: 0.33...2.1 mm^2 (22...14 AWG) solid or stranded shielded copper wire rated at 105 °C (221 °F), or greater, 1.2 mm (3/64 in.) insulation max.
Terminal block torque specs	1756-TBCHS: 0.5 N•m (4.4 lb·in)
Enclosure type	None (open-style)
Temperature code	T4

(1) Use this Conductor Category information for planning conductor routing. See the Industrial Automation Wiring and Grounding Guidelines, publication 1770-4.1.
Use this Conductor Category information for planning conductor routing as described in the appropriate System Level Installation Manual.

Environmental Specifications

Attribute	1756-IB16S
Temperature, operating IEC 60068-2-1 (Test Ae, Operating Cold), IEC 60068-2-2 (Test Be, Operating Dry Heat), IEC 60068-2-14 (Test Nb, Operating Thermal Shock)	0 °C ≤ Ta ≤ 60 °C (32 °F ≤ Ta ≤ 140 °F)
Temperature, nonoperating IEC 60068-2-1 (Test Ab, Unpackaged Nonoperating Cold), IEC 60068-2-2 (Test Bb, Unpackaged Nonoperating Dry Heat), IEC 60068-2-14 (Test Na, Unpackaged Nonoperating Thermal Shock)	-40...+85 °C (-40...+185 °F)
Relative humidity IEC 60068-2-30 (Test Db, Unpackaged Damp Heat)	5...95% noncondensing
Vibration IEC 60068-2-6 (Test Fc, Operating)	2 g @ 10...500 Hz
Shock, operating IEC 60068-2-27 (Test Ea, Unpackaged Shock)	30 g
Shock, nonoperating IEC 60068-2-27 (Test Ea, Unpackaged Shock)	30 g
Emissions	IEC 61000-6-4
ESD immunity IEC 61000-4-2	6 kV contact discharges 8 kV air discharges
Radiated RF immunity IEC 61000-4-3	10V/m with 1 kHz sine wave 80% AM from 80...2000 MHz 3V/m with 1 kHz sine wave 80% AM from 2000...2700 MHz 3V/m with 1 kHz sine wave 80% AM from 2000...6000 MHz
EFT/B immunity IEC 61000-4-4	±2 kV @ 5 kHz on signal ports
Surge transient immunity IEC 61000-4-5	±1 kV line-line (DM) and ±2 kV line-earth (CM) on signal ports
Conducted RF immunity IEC 61000-4-6	10V rms with 1 kHz sine wave 80% AM from 150 kHz...80 MHz

Certifications

Certification[1]	1756-IB16S
cULus	UL Listed for Class I, Division 2 Group A,B,C,D Hazardous Locations, certified for U.S. and Canada. See UL File E194810.
CE	European Union 2014/30/EU EMC Directive, compliant with: • EN 61326-1; Meas./Control/Lab., Industrial Requirements • EN 61000-6-2; Industrial Immunity • EN 61000-6-4; Industrial Emissions • EN 61131-2; Programmable Controllers (Clause 8, Zone A & B)
FM	FM Approved Equipment for use in Class I Division 2 Group A,B,C,D Hazardous Locations
RCM	Australian Radiocommunications Act, compliant with: • EN 61000-6-4; Industrial Emissions
Ex	European Union 2014/34/EU ATEX Directive, compliant with: • EN/IEC 60079-0; Explosive Atmospheres, General Requirements • EN 60079-7; Explosive Atmospheres, Equipment protection by increased safety • Ex ec IIC T4 Gc • DEMKO 19 ATEX 2189X
IECEx	IECEx System, compliant with: • IEC 60079-0; Explosive Atmospheres, General Requirements • IEC 60079-7; Explosive Atmospheres, Equipment protection by increased safety • Ex ec IIC T4 Gc • IECEx UL 19.0021X
UKex	In conformity with the following UKex Statutory Instruments and their amendments: • Schedule 1 of the UKEX Regulation 2016 No. 1107 • Equipment protection by increased safety "e", reference certificate number UL22UKEX2603X • Zone 2 classification according to UKEX Regulation 2016 No. 1107
TÜV	TÜV Certified for Functional Safety;[2] Capable of Cat. 4/PL e according to EN ISO 13849-1 and SIL 3 according to EN 62061/IEC 61508 when used as described in the GuardLogix® 5580 and Compact GuardLogix 5380 Controller Systems Safety Reference Manual, publication 1756-RM012
KC	Korean Registration of Broadcasting and Communications Equipment, compliant with: • Article 58-2 of Radio Waves Act, Clause 3
UKCA	In conformity with the following UK Statutory Instruments and their amendments: • 2016 No. 1091, Electromagnetic Compatibility Regulations • 2016 No. 1101, Electrical Equipment (Safety) Regulations • 2016 No. 1107, Equipment and Protective Systems Intended for Use in Potentially Explosive Atmospheres Regulations • 2012 No. 3032, Restriction of the Use of Certain Hazardous Substances in Electrical and Electronic Equipment
Morocco	In conformity with the following regulations: • Arrêté ministériel n° 6404-15 du 1 er muharram 1437 (15 octobre 2015) Équipements électriques destinés à être utilisés sous certaines limites de tension • Arrêté ministériel n° 6404-15 du 29 ramadan 1436 (16 juillet 2015) Compatibilité électromagnétique des équipements
CCC	CCC 2020122309111998 CNCA-C23-01 强制性产品认证实施规则 防爆电气 CNCA-C23-01 CCC Implementation Rule Explosion-Proof Electrical Products

(1) When product is marked. See the Product Certification link at rok.auto/certifications for Declarations of Conformity, Certificates, and other certification details.
(2) When used with specified firmware revisions.

1756-OBV8S

ControlLogix DC (18...32V) safety bipolar/sourcing output module

You can use the 1756-OBV8S module in Bipolar mode or Sourcing mode.

IMPORTANT
- The 24V (DC+ and DC-) power connections are used to supply field-side power to the module.
- All terminals with the same name are connected together on the module. For example, DC+ can be connected to either terminal marked DC +.
- Do not physically connect more than two wires to one RTB terminal.
- All other I/O modules in the same chassis must use an SELV/PELV power supply.
- The 1756-OBV8S module is compatible with a series C ControlLogix chassis.
- Do not install the output module in a series B ControlLogix chassis.
- Because of the higher internal power dissipation of the output module, do not install a 1756-OBV8S module next to any controller or communication module.

1756-OBV8S Simplified Schematic

This schematic represents EVEN channels. ODD channels would reverse which micro controller controls P and M.

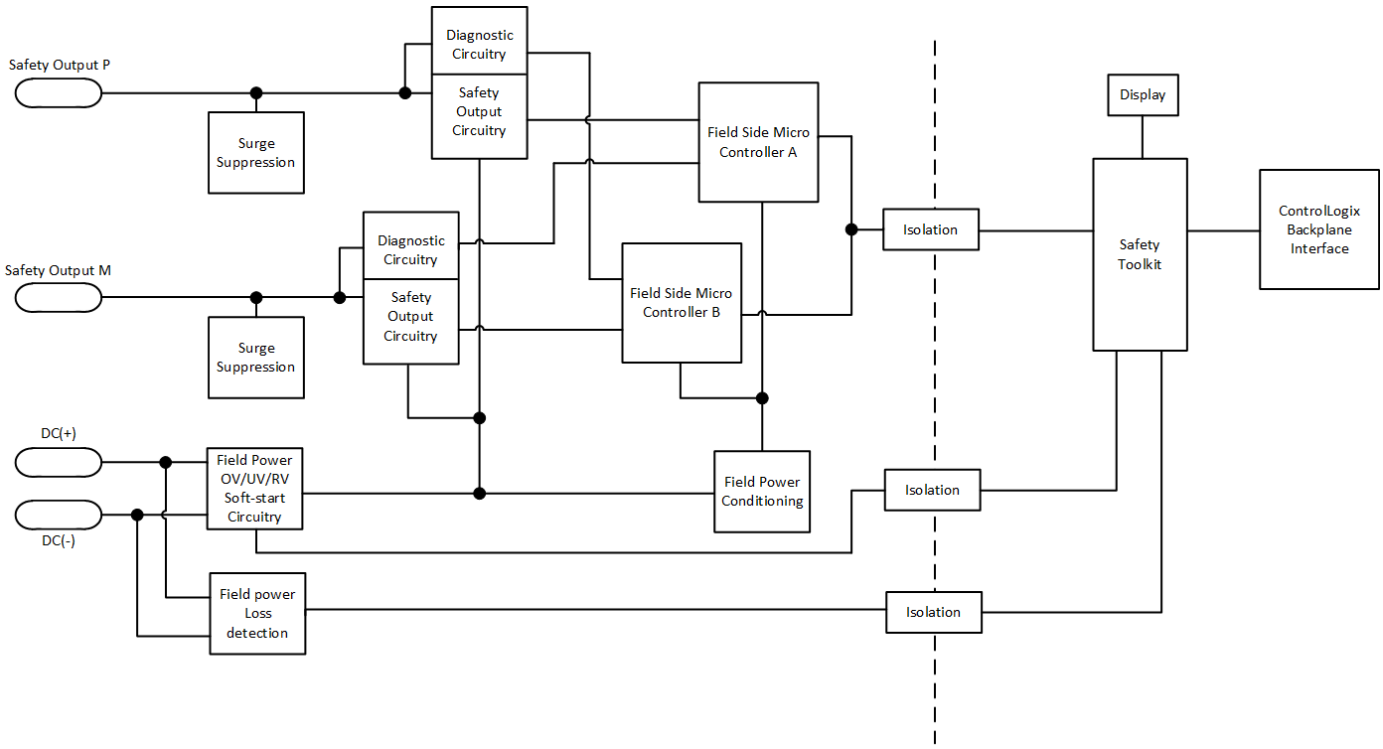

Bipolar Mode

When the module is wired as shown, it is suitable for applications that are rated up to, and including, **Category 2** and **PLd** as defined in ISO 13849-1.

To achieve that suitability rating, you may have to perform diagnostic testing and monitoring of the safety function. One diagnostic test method is to configure the safety output channel for Safety Pulse Test to test the circuit for short circuits to 24V DC.

Channel Connections

This wiring example shows connections to Safety Output 0. You are not limited to using channel 0 in this mode. You can use all channels as determined by your application.

We **strongly recommend** that, if you have a direct connection between the safety output module and an input module and those modules are powered by separate power supplies, you connect module DC- and actuator DC- together. This practice helps to eliminate grounding float from disrupting diagnostics.

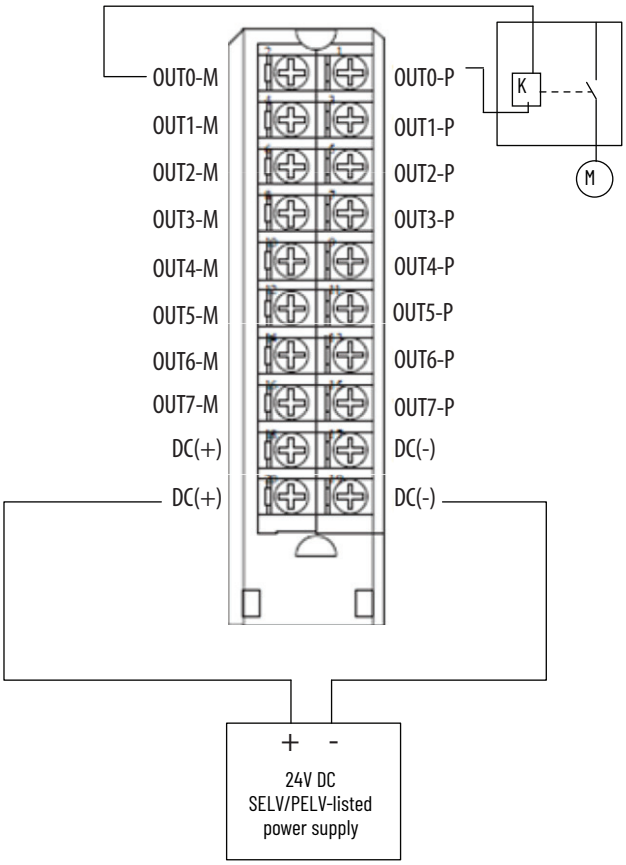

When the module is wired as shown, it is suitable for applications that are rated up to, and including, **Category 4** and **PLe** as defined in ISO 13849-1.

To achieve that suitability rating, you may have to perform diagnostic testing and monitoring of the safety function. One diagnostic test method is to configure the safety output channel for Safety Pulse Test to test the circuit for short circuits to 24V DC.

The application is configured so that a No Load fault can only be detected if the wires from **both** the P- terminal and the M-terminal are disconnected.

For Cat.4 applications, if your application remains in safe state, that is, the output is off, for a prolonged duration, we recommend that you take one of these actions:

- Apply output monitoring at the actuator. The monitoring can be direct or indirect.
- Limit the safe state to no more than 24 hours.
- Conduct functional test if safe state dwell time increases.

Connection Pairs

The terminals for each channel function as a Bipolar connection pair when you use a 1756-OBV8S module in Bipolar switching mode. For example, the Safety Output 0 P (Sourcing) terminal and Safety Output 0 M (Sinking) terminal are a Bipolar connection pair. That is, they are a P-M pair. When the module is in Bipolar switching mode, you must connect the device to both terminals.

Channel Connections

This wiring example shows connections to the P-M pair for Safety Output 0. You are not limited to using channel 0 in this mode. You can use all channel pairs as determined by your application.

We **strongly recommend** that, if you have a direct connection between the safety output module and an input module and those modules are powered by separate power supplies, you connect the DC- terminals together. This practice helps to eliminate grounding float from disrupting diagnostics.

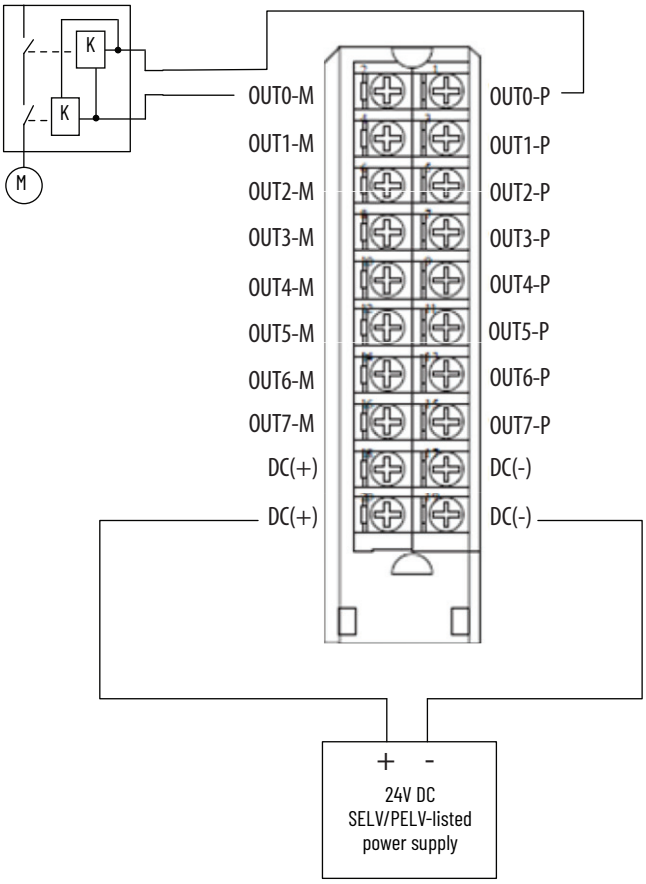

When the module is wired as shown, it is suitable for applications that are rated up to, and including, **Category 4** and **PLe** as defined in ISO 13849-1.

To achieve that suitability rating, you may have to perform diagnostic testing and monitoring of the safety function. One diagnostic test method is to configure the safety output channel for Safety Pulse Test to test the circuit for short circuits to 24V DC.

- We **strongly recommend** that you connect separate shielded cables to the P terminal and the M terminal to reduce possibility of a short between these terminals. If a short is detected across the P-M pair, the module outputs are turned off, but the actuator that is connected to the output pair remains on.
- No Load and Overload conditions are only detectable at the P terminal.

For Cat.4 applications, if your application remains in safe state, that is, the output is off, for a prolonged duration, we recommend that you take one of these actions:

- Apply output monitoring at the actuator. The monitoring can be direct or indirect.
- Limit the safe state to no more than 24 hours.
- Conduct functional test if safe state dwell time increases.

Actuator DC Power

In this wiring configuration, you must connect the **DC+ terminal to an SELV/PELV-listed** power supply.
The DC+ and DC- on the actuator must be connected to the same power supply as the DC+ and DC- on the module.

Connection Pairs

The terminals for each channel function as a Bipolar connection pair when you use a 1756-OBV8S module in Bipolar switching mode. For example, the Safety Output 0 P (Sourcing) terminal and
Safety Output 0 M (Sinking) terminal are a Bipolar connection pair. That is, they are a P-M pair.
When the module is in Bipolar switching mode, you must connect the device to both terminals.

Channel Connections

This wiring example shows connections to the P-M pair for Safety Output 0. You are not limited to using channel 0 in this mode. You can use all channel pairs as determined by your application.

We **strongly recommend** that, if you have a direct connection between the safety output module and an input module and those modules are powered by separate power supplies, you connect the DC- terminals together. This practice helps to eliminate grounding float from disrupting diagnostics.

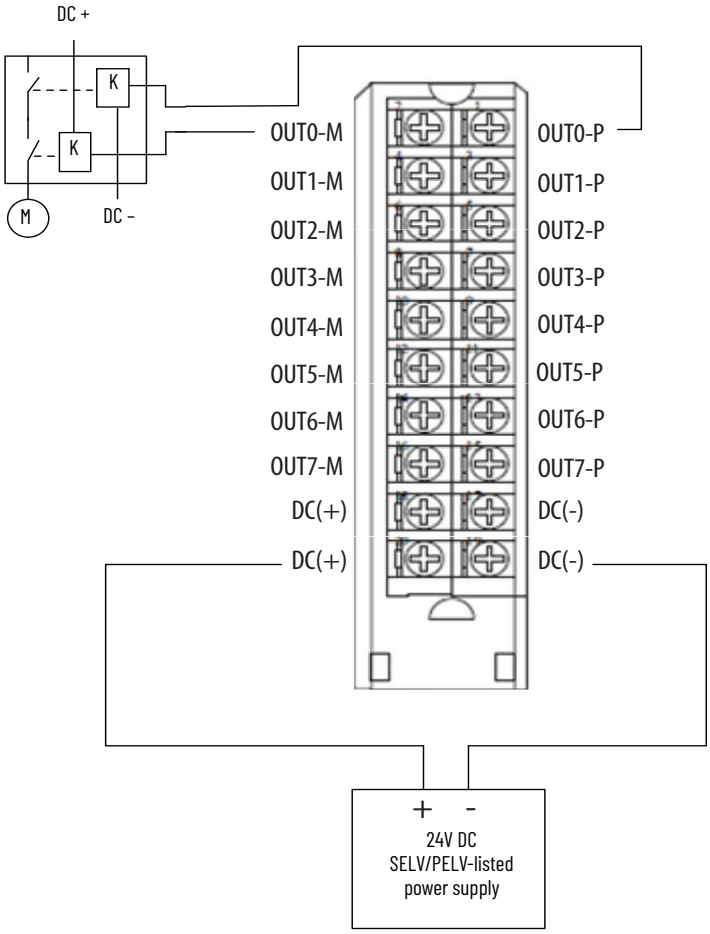

Sourcing Mode

When the module is wired as shown, it is suitable for applications that are rated up to, and including, **Category 2** and **PLd** as defined in ISO 13849-1.

To achieve that suitability rating, you may have to perform diagnostic testing and monitoring of the safety function. One diagnostic test method is to configure the safety output channel for Safety Pulse Test to test the circuit for short circuits to 24V DC.

Channel Connections

This wiring example shows connections to Safety Output 0. You are not limited to using channel 0 in this mode. You can use all channels as determined by your application.

We **strongly recommend** that, if you have a direct connection between the safety output module and an input module and those modules are powered by separate power supplies, you connect module DC- and actuator DC- together. This practice helps to eliminate grounding float from disrupting diagnostics.

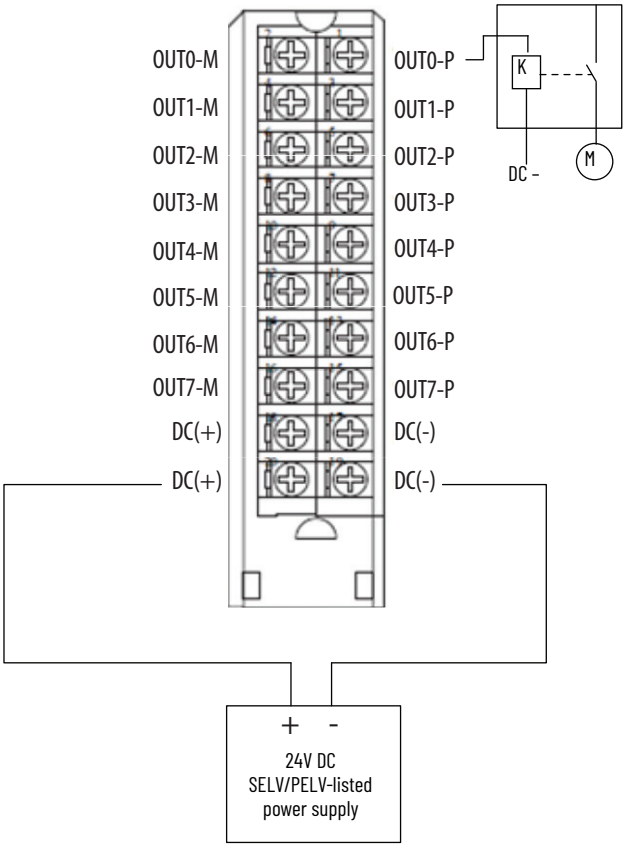

When the module is wired as shown, it is suitable for applications that are rated up to, and including, **Category 4** and **PLe** as defined in ISO 13849-1.

To achieve that suitability rating, you may have to perform diagnostic testing and monitoring of the safety function. One diagnostic test method is to configure the safety output channel for Safety Pulse Test to test the circuit for short circuits to 24V DC.

For Cat.4 applications, if your application remains in safe state, that is, the output is off, for a prolonged duration, we recommend that you take one of these actions:

- Apply output monitoring at the actuator. The monitoring can be direct or indirect.
- Limit the safe state to no more than 24 hours.
- Conduct functional test if safe state dwell time increases.

Connection Pairs

When you use dual-channel sourcing wiring on the 1756-OBV8S module, you must connect the devices to dual-channel connection pairs. For example, the devices are connected to channels 4 and 5 because they are a connection pair. These channels are dual-channel connection pairs:

- Channels 0 and 1 (shown)
- Channels 2 and 3
- Channels 4 and 5
- Channels 6 and 7

Channel Connections

This wiring example shows connections to Safety Output 0 P and Safety Output 1P. You are not limited to using channels 0 and 1 in this mode. You can use all channel pairs as determined by your application.

We **strongly recommend** that, if you have a direct connection between the safety output module and an input module and those modules are powered by separate power supplies, you connect module DC- and actuator DC- together. This practice helps to eliminate grounding float from disrupting diagnostics.

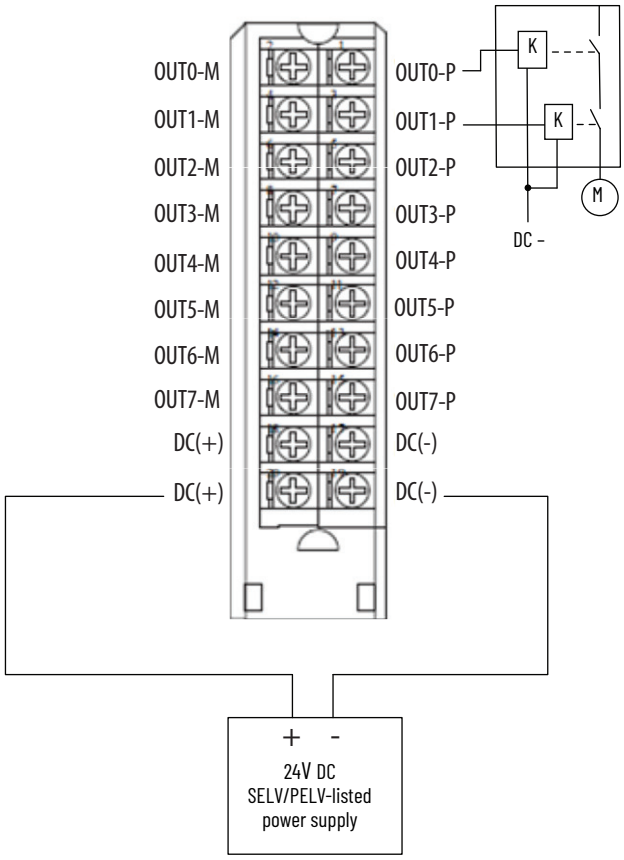

Technical Specifications

Attribute	1756-OBV8S
On-state voltage, min(1)	17.5V DC
On-state voltage, nom(1)	24V DC
On-state voltage, max(1)	32V DC
On-state voltage drop, max(1)	0.5V DC
On-state current per channel, max(1)	1 A
Off-state voltage, max(1)	0.5V DC
Off-state leakage current per point, max(2)	1.5 mA
Output current rating per channel	1 A
Surge current per point, max	1.5 A
Output delay time (backplane to screw)	
Off to On	4 ms, max
On to Off	4 ms, max
Safety Integrity Level	Up to and including Cat. 4 / PLe acc. to EN ISO 13849-1, SIL CL 3 acc. to IEC 62061, SIL 3 acc. to IEC 61508.(3)

Technical Specifications (Continued)

Attribute	1756-OBV8S
Safety reaction time (SRT)	4.5 ms
Pulse width, max	750 µs
Field power loss detection	Yes (per point)
No load detection diagnostics	Yes (per point)
Output short circuit/overload detection	Yes (per point)
Output short circuit/overload protection	Yes (per point)
Output overtemperature detection	Yes (per point)
Output overtemperature protection	Yes (per point)
Reverse voltage protection	Yes
Overvoltage protection, max	Yes
CIP Sync	Yes
Output control in fault mode per point	Yes
Output states in program mode per point	Off (default), Hold
Output states in fault mode per point	Off (default), Hold

(1) Field Power related attributes.
(2) Recommended Loading Resistor - To limit the effects of leakage current through solid-state outputs, you can connect a loading resistor in parallel with your load. For 24V DC operation, use a 5.6 KΩ, 0.5 W resistor for transistor operation.
(3) See the 1756 ControlLogix Digital Safety I/O Modules User Manual, publication 1756-UM013, for Safety Application Suitability Levels and Safety Data for Safety I/O Modules.

General Specifications

Attribute	1756-OBV8S
Outputs	8
Voltage category	24V DC
Current draw @ 5.1V	280 mA
Total backplane power	1.43 W
Field Power voltage range	18...32V DC SELV/PELV
Field Power current, max	8.1 A SELV/PELV
Output Power voltage range	18...32V
Output Power current, max	1 A SELV/PELV 150VA
Field Power	1 A per channel @ 18...32V DC 8.1 A per module @ 18...32V DC
Pilot Duty	2.4 A inrush
Power dissipation, max	8 W
Thermal dissipation, max	27.28 BTU/hr
Isolation voltage	60V (continuous), basic insulation type, channels-to-backplane No isolation between DC power and channels No isolation between individual ports
Module keying	Electronic keying via programming software
Removable terminal block housing	1756-TBNHS 1756-TBSHS
RTB keying	User-defined mechanical
Wire category(1)	2 - power ports
Wire size	1756-TBNHS
	Single wire connection: 0.33...2.1 mm^2 (22...14 AWG) solid or stranded shielded copper wire rated at 105 °C (221 °F), or greater, 1.2 mm (3/64 in.) insulation max. Double wire connection: 0.33...1.3 mm^2 (22...16 AWG) solid or stranded copper wire rated at 105 °C (221 °F), or greater, 1.2 mm (3/64 in.) insulation max. Use only the same size wires with no intermixing of solid and stranded wire types.
	1756-TBSHS
	Single wire connection: 0.33...2.1 mm^2 (22...14 AWG) solid or stranded shielded copper wire rated at 105 °C (221 °F), or greater, 1.2 mm (3/64 in.) insulation max.
Terminal block torque specs	1756-TBNHS: 1.36 N•m (12 lb·in)
Enclosure type rating	None (open-style)
Temperature code	T4

(1) Use this Conductor Category information for planning conductor routing. See the Industrial Automation Wiring and Grounding Guidelines, publication 1770-4.1.

Environmental Specifications

Attribute	1756-OBV8S
Temperature, operating IEC 60068-2-1 (Test Ab, Operating Cold), IEC 60068-2-2 (Test Bb, Unpackaged Nonoperating Dry Heat), IEC 60068-2-14 (Test Na, Operating Thermal Shock)	0 °C < Ta < +60 °C (+32 °F < Ta < +140 °F)
Temperature, nonoperating IEC 60068-2-1 (Test Ab, Unpackaged Nonoperating Cold), IEC 60068-2-2 (Test Bb, Unpackaged Nonoperating Dry Heat), IEC 60068-2-14 (Test Na, Unpackaged Nonoperating Thermal Shock)	-40...+85 °C (-40...+185 °F)
Relative humidity IEC 60068-2-30 (Test Db, Unpackaged Damp Heat)	5...95% noncondensing
Vibration IEC 60068-2-6 (Test Fc, Operating)	2 g @ 10...500 Hz
Shock, operating IEC 60068-2-27 (Test Ea, Unpackaged Shock)	30 g
Shock, nonoperating IEC 60068-2-27 (Test Ea, Unpackaged Shock)	30 g
Emissions	IEC 61000-6-4
ESD immunity IEC 61000-4-2	6 kV contact discharges 8 kV air discharges
Radiated RF immunity IEC 61000-4-3	10V/m with 1 kHz sine wave 80% AM from 80...2000 MHz 3V/m with 1 kHz sine wave 80% AM from 2000...2700 MHz 3V/m with 1 kHz sine wave 80% AM from 2700...6000 MHz
EFT/B immunity IEC 61000-4-4	±2 kV @ 5 kHz on signal ports
Surge transient immunity IEC 61000-4-5	±1 kV line-line (DM) and ±2 kV line-earth (CM) on signal ports
Conducted RF immunity IEC 61000-4-6	10V rms with 1 kHz sine wave 80% AM from 150 kHz...80 MHz

Certifications

Certification[1]	1756-OBV8S
cULus	UL Listed for Class I, Division 2 Group A,B,C,D Hazardous Locations, certified for U.S. and Canada. See UL File E194810.
FM	FM Approved Equipment for use in Class I Division 2 Group A,B,C,D Hazardous Locations
CE	European Union 2014/30/EU EMC Directive, compliant with: • EN 61326-1; Meas./Control/Lab., Industrial Requirements • EN 61000-6-2; Industrial Immunity • EN 61000-6-4; Industrial Emissions • EN 61131-2; Programmable Controllers (Clause 8, Zone A & B)
RCM	Australian Radiocommunications Act, compliant with EN 61000-6-4; Industrial Emissions
Ex	European Union 2014/34/EU ATEX Directive, compliant with: • EN/IEC 60079-0; Explosive Atmospheres, General Requirements • EN 60079-7; Explosive Atmospheres, Equipment protection by increased safety • Ex ec IIC T4 Gc • DEMKO 19 ATEX 2189X
IECEx	IECEx System, compliant with: • IEC 60079-0; Explosive Atmospheres, General Requirements • IEC 60079-7; Explosive Atmospheres, Equipment protection by increased safety • Ex ec IIC T4 Gc • IECEx UL 19.0021X
UKex	In conformity with the following UKex Statutory Instruments and their amendments: • Schedule 1 of the UKEX Regulation 2016 No. 1107 • Equipment protection by increased safety "e", reference certificate number UL22UKEX2603X • Zone 2 classification according to UKEX Regulation 2016 No. 1107
TÜV	TÜV Certified for Functional Safety;[2] Capable of Cat. 4/PL e according to EN ISO 13849-1 and SIL 3 according to EN 62061/IEC 61508 when used as described in the GuardLogix 5580 and Compact GuardLogix 5380 Controller Systems Safety Reference Manual, publication 1756-RM012
KC	Korean Registration of Broadcasting and Communications Equipment, compliant with Article 58-2 of Radio Waves Act, Clause 3
UKCA	In conformity with the following UK Statutory Instruments and their amendments: • 2016 No. 1091, Electromagnetic Compatibility Regulations • 2016 No. 1101, Electrical Equipment (Safety) Regulations • 2016 No. 1107, Equipment and Protective Systems Intended for Use in Potentially Explosive Atmospheres Regulations • 2012 No. 3032, Restriction of the Use of Certain Hazardous Substances in Electrical and Electronic Equipment
Morocco	In conformity with the following regulations: • Arrêté ministériel n° 6404-15 du 1 er muharram 1437 (15 octobre 2015) Équipements électriques destinés à être utilisés sous certaines limites de tension • Arrêté ministériel n° 6404-15 du 29 ramadan 1436 (16 juillet 2015) Compatibilité électromagnétique des équipements
CCC	CCC 2020122309111998 CNCA-C23-01 强制性产品认证实施规则 防爆电气 CNCA-C23-01 CCC Implementation Rule Explosion-Proof Electrical Products

(1) When product is marked. See the Product Certification link at rok.auto/certifications for Declarations of Conformity, Certificates, and other certification details.
(2) When used with specified firmware revisions.

1756-OX8I, 1756-OX8IK

ControlLogix AC (10...240V) DC (5...125V) isolated contact module

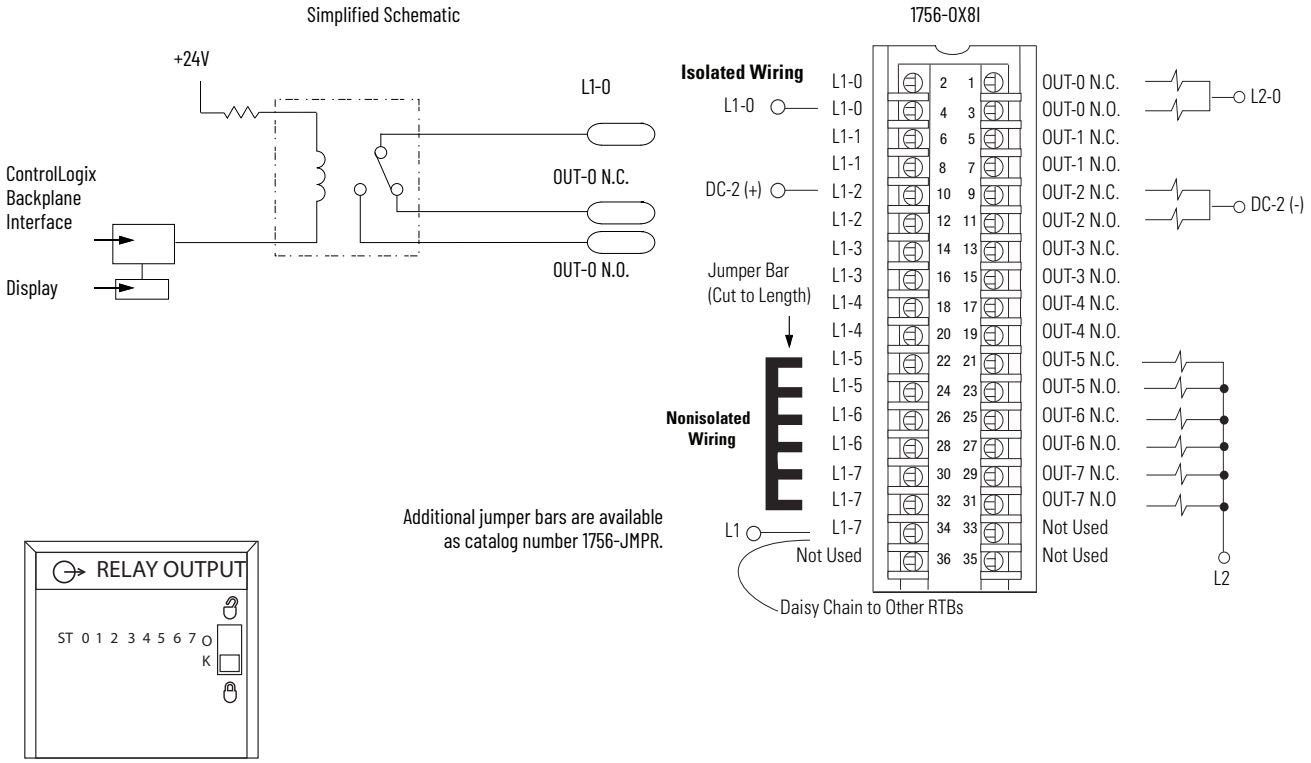

Technical Specifications

Attribute	1756-OX8I, 1756-OX8IK
Outputs	8 N.O. 8 N.C. individually isolated (two points per group)
Pilot duty	C300/R150
Operating voltage range	5...125V DC 10...240V AC
Contact current rating	1 A @ 5...30V DC 0.5 A @ 48V DC 0.22 A @ 125V DC 1.5 A @ 120V AC 50/60 Hz 0.75 A @ 240VAC 50/60 Hz
Output delay time Off to On On to Off	 13 ms max 13 ms max
Current draw @ 5.1V	100 mA
Current draw @ 24V	100 mA
Total backplane power	2.9 W
Power dissipation, max	3.1 W @ 60 °C (140 °F)
Thermal dissipation	10.57 BTU/hr
Off-state leakage current per point, max	0 mA
Minimum load current	10 mA per point
Initial contact resistance, max	100 mΩ @ 6V 1 A
Switching frequency, max	1 operation/3 s (0.3 Hz at rated load)
Bounce time, mean	1.2 ms
Expected contact life	300,000 cycles resistive 100,000 cycles inductive
Scheduled outputs	Synchronization within 16.7 s max, reference to the Coordinated System Time
States in Fault mode per point	Hold last state, On or Off (Off is default)
States in Program mode per point	Hold last state, On or Off (Off is default)
Isolation voltage	250V (continuous), basic insulation type, outputs-to-backplane, and output-to-output
Module keying	Electronic, software configurable
Fusing	Not protected. A fused IFM is recommended to help protect outputs.
Removable terminal block	1756-TBCH 1756-TBS6H
RTB keying	User-defined mechanical
Slot width	1
Wire category	1[1]
Enclosure type	None (open-style)
North American temperature code	T4A

(1) Use this conductor category information for planning conductor routing as described in the system-level installation manual. See the Industrial Automation Wiring and Grounding Guidelines, publication 1770-4.1.

Environmental Specifications

Attribute	1756-OX8I, 1756-OX8IK
Temperature, operating IEC 60068-2-1 (Test Ae, Operating Cold), IEC 60068-2-2 (Test Be, Operating Dry Heat), IEC 60068-2-14 (Test Nb, Operating Thermal Shock)	0...60 °C (32...140 °F)
Temperature, nonoperating IEC 60068-2-1 (Test Ab, Unpackaged Nonoperating Cold), IEC 60068-2-2 (Test Bb, Unpackaged Nonoperating Dry Heat), IEC 60068-2-14 (Test Na, Unpackaged Nonoperating Thermal Shock)	-40...+85 °C (-40...+185 °F)
Relative humidity IEC 60068-2-30 (Test dB, Unpackaged Damp Heat)	5...95% noncondensing
Vibration IEC 60068-2-6 (Test Fc, Operating)	2 g @ 10...500 Hz
Shock, operating IEC 60068-2-27 (Test Ea, Unpackaged Shock)	30 g
Shock, nonoperating IEC 60068-2-27 (Test Ea, Unpackaged Shock)	50 g
Emissions	IEC 61000-6-4
ESD immunity IEC 61000-4-2	6 kV contact discharges 8 kV air discharges
Radiated RF immunity IEC 61000-4-3	10V/m with 1 kHz sine wave 80% AM from 80...2000 MHz 10V/m with 200 Hz 50% Pulse 100% AM @ 900 MHz 10V/m with 200 Hz 50% Pulse 100% AM @ 1890 MHz 3V/m with 1 kHz sine wave 80% AM from 2000...2700 MHz
EFT/B immunity IEC 61000-4-4	±4 kV at 5 kHz on signal ports
Surge transient immunity IEC 61000-4-5	±1 kV line-line (DM) and ±2 kV line-earth (CM) on signal ports
Conducted RF immunity IEC 61000-4-6	10V rms with 1 kHz sine wave 80% AM from 150 kHz...80 MHz

Certifications

Certification(1)	1756-OX8I, 1756-OX8IK
cULus	UL Listed Industrial Control Equipment, certified for US and Canada. See UL File E65584. UL Listed for Class I, Division 2 Group A,B,C,D Hazardous Locations, certified for U.S. and Canada. See UL File E194810.
CE	European Union 2014/30/EU EMC Directive, compliant with: • EN 61326-1; Meas./Control/Lab., Industrial Requirements • EN 61000-6-2; Industrial Immunity • EN 61000-6-4; Industrial Emissions • EN 61131-2; Programmable Controllers (Clause 8, Zone A & B) European Union 2014/35/EU LVD, compliant with EN 61131-2; Programmable Controllers (Clause 11)
RCM	Australian Radiocommunications Act, compliant with EN 61000-6-4; Industrial Emissions
FM	FM Approved Equipment for use in Class I Division 2 Group A,B,C,D Hazardous Locations
KC	Korean Registration of Broadcasting and Communications Equipment, compliant with Article 58-2 of Radio Waves Act, Clause 3
UKCA	In conformity with the following UK Statutory Instruments and their amendments: • 2016 No. 1091, Electromagnetic Compatibility Regulations • 2016 No. 1101, Electrical Equipment (Safety) Regulations • 2016 No. 1107, Equipment and Protective Systems Intended for Use in Potentially Explosive Atmospheres Regulations • 2012 No. 3032, Restriction of the Use of Certain Hazardous Substances in Electrical and Electronic Equipment
Morocco	In conformity with the following regulations: • Arrêté ministériel n° 6404-15 du 1 er muharram 1437 (15 octobre 2015) Équipements électriques destinés à être utilisés sous certaines limites de tension • Arrêté ministériel n° 6404-15 du 29 ramadan 1436 (16 juillet 2015) Compatibilité électromagnétique des équipements

(1) When product is marked. See the Product Certification link at rok.auto/certifications for Declarations of Conformity, Certificates, and other certification details.

1756-OW16I, 1756-OW16IK

ControlLogix AC (10...240V) DC (5...125V) isolated contact module

Simplified Schematic

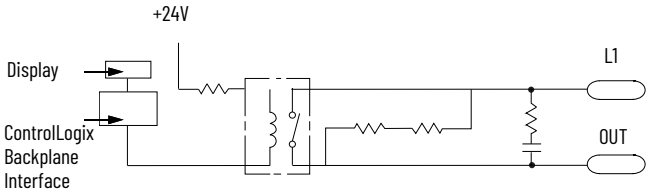

1756-OW16I

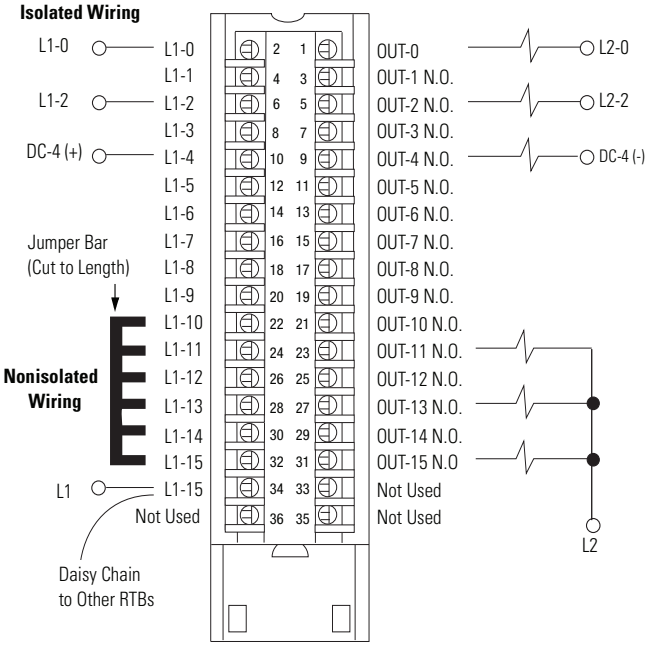

Additional jumper bars are available as catalog number 1756-JMPR.

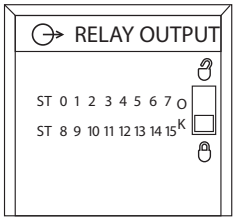

Technical Specifications

Attribute	1756-OW16I, 1756-OW16IK
Outputs	16 N.O. individually isolated
Pilot duty	C300/R150
Operating voltage range	5...125V DC 10...240V AC
Output voltage range (load dependent)	1 A @ 5...30V DC 0.5 A @ 48V DC 0.22 A @ 125V DC 1.5 A @ 120V AC 50/60 Hz 0.75 A @ 240V AC 50/60 Hz
Output delay time Off to On On to Off	 10 ms max 10 ms max
Current draw @ 5.1V	150 mA
Current draw @ 24V	150 mA
Total backplane power	4.4 W
Power dissipation, max	4.5 W @ 60 °C (140 °F)
Thermal dissipation	15.35 BTU/hr
Off-state leakage current per point, max	1.5 mA per point
Minimum load current	10 mA per point
Initial contact resistance, max	100 mΩ @ 6V 1 A
Switching frequency, max	1 operation/3 s (0.3 Hz at rated load)
Bounce time, mean	1.2 ms
Expected contact life	300,000 cycles resistive 100,000 cycles inductive
Scheduled outputs	Synchronization within 16.7 s max, reference to the Coordinated System Time
States in Fault mode per point	Hold last state, On or Off (Off is default)
States in Program mode per point	Hold last state, On or Off (Off is default)
Isolation voltage	250V (continuous), basic insulation type, outputs-to-backplane, and output-to-output
Module keying	Electronic, software configurable
Fusing	Not protected. A fused IFM can be used to help protect outputs. See publication 1492-TD008. However, the ControlLogix system has been agency certified using only the ControlLogix RTBs, that is, 1756-TBCH, 1756-TBNH, 1756-TBSH, and 1756-TBS6H. Any application that requires agency certification of the ControlLogix system using other wiring termination methods can require application-specific approval by the certifying agency.
Removable terminal block	1756-TBCH 1756-TBS6H
RTB keying	User-defined mechanical
Slot width	1
Wire category	1(1)
Enclosure type	None (open-style)
North American temperature code	T4A

(1) Use this conductor category information for planning conductor routing as described in the system-level installation manual. See the Industrial Automation Wiring and Grounding Guidelines, publication 1770-4.1.

Environmental Specifications

Attribute	1756-OW16I, 1756-OW16IK
Temperature, operating IEC 60068-2-1 (Test Ae, Operating Cold), IEC 60068-2-2 (Test Be, Operating Dry Heat), IEC 60068-2-14 (Test Nb, Operating Thermal Shock)	0...60 °C (32...140 °F)
Temperature, nonoperating IEC 60068-2-1 (Test Ab, Unpackaged Nonoperating Cold), IEC 60068-2-2 (Test Bb, Unpackaged Nonoperating Dry Heat), IEC 60068-2-14 (Test Na, Unpackaged Nonoperating Thermal Shock)	-40...+85 °C (-40...+185 °F)
Relative humidity IEC 60068-2-30 (Test dB, Unpackaged Damp Heat)	5...95% noncondensing
Vibration IEC 60068-2-6 (Test Fc, Operating)	2 g @ 10...500 Hz
Shock, operating IEC 60068-2-27 (Test Ea, Unpackaged Shock)	30 g
Shock, nonoperating IEC 60068-2-27 (Test Ea, Unpackaged Shock)	50 g
Emissions	IEC 61000-6-4
ESD immunity IEC 61000-4-2	6 kV contact discharges 8 kV air discharges
Radiated RF immunity IEC 61000-4-3	10V/m with 1 kHz sine wave 80% AM from 80...2000 MHz 10V/m with 200 Hz 50% Pulse 100% AM @ 900 MHz 10V/m with 200 Hz 50% Pulse 100% AM @ 1890 MHz 3V/m with 1 kHz sine wave 80% AM from 2000...2700 MHz
EFT/B immunity IEC 61000-4-4	±4 kV at 5 kHz on signal ports
Surge transient immunity IEC 61000-4-5	±1 kV line-line (DM) and ±2 kV line-earth (CM) on signal ports
Conducted RF immunity IEC 61000-4-6	10V rms with 1 kHz sine wave 80% AM from 150 kHz...80 MHz

Certifications

Certification(1)	1756-OW16I, 1756-OW16IK
cULus	UL Listed Industrial Control Equipment, certified for US and Canada. See UL File E65584. UL Listed for Class I, Division 2 Group A,B,C,D Hazardous Locations, certified for U.S. and Canada. See UL File E194810.
CE	European Union 2014/30/EU EMC Directive, compliant with: • EN 61326-1; Meas./Control/Lab., Industrial Requirements • EN 61000-6-2; Industrial Immunity • EN 61000-6-4; Industrial Emissions • EN 61131-2; Programmable Controllers (Clause 8, Zone A & B) European Union 2014/35/EU LVD, compliant with EN 61131-2; Programmable Controllers (Clause 11)
RCM	Australian Radiocommunications Act, compliant with EN 61000-6-4; Industrial Emissions
FM	FM Approved Equipment for use in Class I Division 2 Group A,B,C,D Hazardous Locations
KC	Korean Registration of Broadcasting and Communications Equipment, compliant with Article 58-2 of Radio Waves Act, Clause 3
UKCA	In conformity with the following UK Statutory Instruments and their amendments: • 2016 No. 1091, Electromagnetic Compatibility Regulations • 2016 No. 1101, Electrical Equipment (Safety) Regulations • 2016 No. 1107, Equipment and Protective Systems Intended for Use in Potentially Explosive Atmospheres Regulations • 2012 No. 3032, Restriction of the Use of Certain Hazardous Substances in Electrical and Electronic Equipment
Morocco	In conformity with the following regulations: • Arrêté ministériel n° 6404-15 du 1 er muharram 1437 (15 octobre 2015) Équipements électriques destinés à être utilisés sous certaines limites de tension • Arrêté ministériel n° 6404-15 du 29 ramadan 1436 (16 juillet 2015) Compatibilité électromagnétique des équipements

(1) When product is marked. See the Product Certification link at rok.auto/certifications for Declarations of Conformity, Certificates, and other certification details.

1756-IF4FXOF2F, 1756-IF4FXOF2FK

ControlLogix high-speed input/output analog module

1756-IF4FXOF2F Current

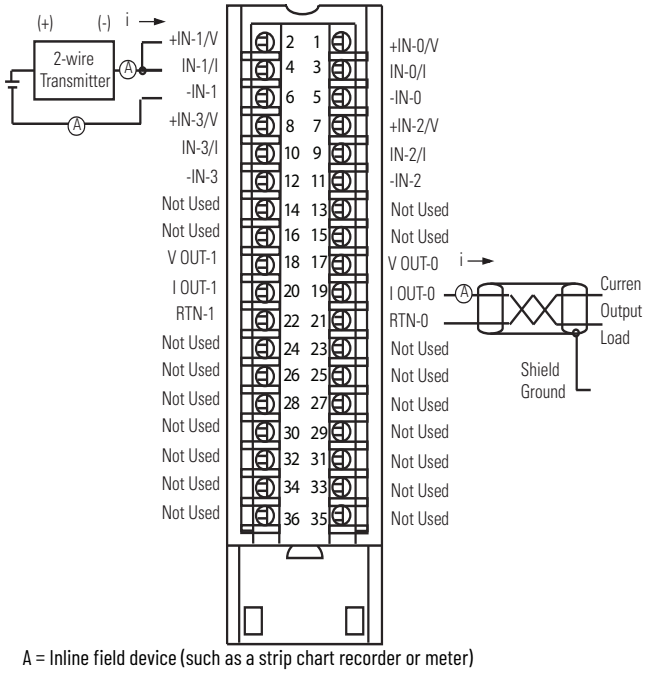

A = Inline field device (such as a strip chart recorder or meter)

1756-IF4FXOF2F Voltage

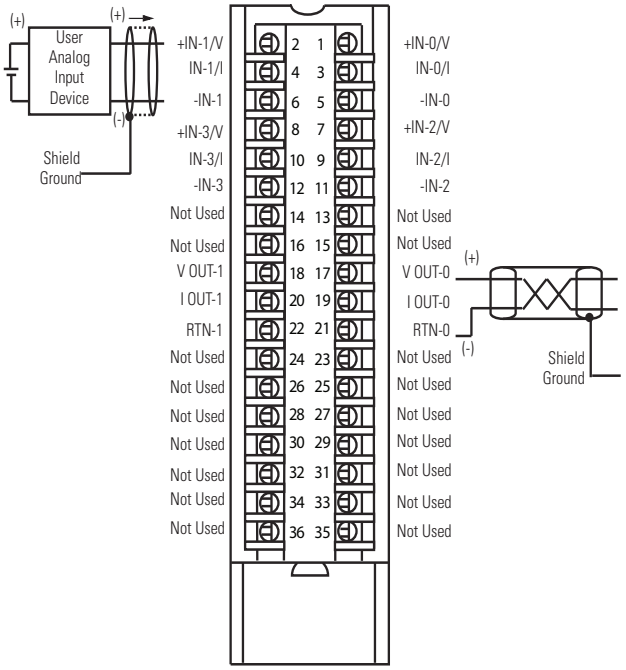

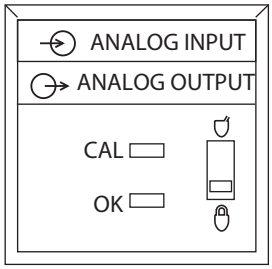

Technical Specifications

Attribute	1756-IF4FXOF2F, 1756-IF4FXOF2FK
Current draw at 5.1V	375 mA
Current draw at 24V	100 mA
Voltage and current ratings	Backplane: 375 mA @ 5.1V DC, 100 mA @ 24V DC Analog inputs: -10...+10V, 4...20 mA Analog outputs: -10...+10V, 4...20 mA
Power consumption	4.3 W
Power dissipation	Voltage: 4.3 W Current: 4.7 W
Thermal dissipation	Voltage: 14.66 BTU/hr Current: 16.02 BTU/hr
Data format	IEEE 32-bit floating point
Isolation voltage	250V (continuous) Reinforced insulation type, inputs and outputs to backplane No isolation between individual inputs or outputs
Module keying	Electronic, software configurable
Removable terminal block	1756-TBCH 1756-TBS6H
RTB keying	User-defined mechanical
Slot width	1
Wire size	1756-TBCH Single wire connection: 0.33...2.1 mm^2 (22...14 AWG) solid or stranded shielded copper wire rated at 105 °C (221 °F), or greater, 1.2 mm (3/64 in.) insulation max. Double wire connection: 0.33...1.3 mm^2 (22...16 AWG) solid or stranded copper wire rated at 105 °C (221 °F), or greater, 1.2 mm (3/64 in.) insulation max. Use only the same size wires with no intermixing of solid and stranded wire types. 1756-TBS6H Single wire connection: 0.33...2.1 mm^2 (22...14 AWG) solid or stranded shielded copper wire rated at 105 °C (221 °F), or greater, 1.2 mm (3/64 in.) insulation max.
Terminal block torque specs	1756-TBCH: 0.5 Nm (4.4 pound-inches)
Wiring category(1)	2 - on signal ports
Enclosure type	None (open-style)
Temperature code	T4

(1) Use this Conductor Category information for planning conductor routing. See the Industrial Automation Wiring and Grounding Guidelines, publication 1770-4.1.

Input Specifications

Attribute	1756-IF4FXOF2F, 1756-IF4FXOF2FK
Number	4 high-speed, submillisecond, differential
Input range	± 10V 0...10V 0...5V 0...20 mA (Overrange indication when exceeded)
Resolution	Approx 14 bits across ±10.5V DC (21V total) ±10.5V range: 1.3 mV/bit, 14 bit effective 0...10.5V range: 1.3 mV/bit, 13 bit effective 0...5.25V range: 1.3 mV/bit, 12 bit effective Approx 12 bits across 21 mA 0...21 mA range: 5.25 µA/bit
Repeatability	±1 Least Significant Bit (LSB)(1)
Input impedance	Voltage: >1 MΩ Current: 249 Ω
Open circuit detection	Positive full-scale reading within 1 s
Overvoltage protection	Voltage: 30V DC Current: 8V AC/DC
Calibrated accuracy @ 25 °C (77 °F)	0.05% of range immediately after calibration Better than 0.1% of range within calibration interval
Calibration interval	12 months
Gain drift with temperature	Voltage: 25 ppm/°C max Current: 35 ppm/°C max
Module error	0.2% of range
Module scan time	300 µs min(2)
Input conversion method	Successive approximation

(1) Repeatability is defined as the stability of the input channel reading when a steady state signal is applied, for example, ±1 LSB is one count (1.3 mV) from the nominal reading.
(2) 300 µs min for 1756-IF4FXOF2F/B, firmware revision 3 or greater. 400 µs min for 1756-IF4FXOF2F/A, firmware revision 1.

Output Specifications

Attribute	1756-IF4FXOF2F, 1756-IF4FXOF2FK
Number	Two high-speed voltage or current
Output range	± 10V 0...20 mA
Resolution	13 bits across 21 mA = 2.8 µA/bit 14 bits across 21.8V = 1.3 mV/bit
Open circuit detection	Current output only (Output must be set to >0.1 mA)
Overvoltage protection	24V DC
Short circuit protection	Electronically current limited to 21 mA or less
Drive capability	Voltage: >2000 Ω Current: 0...750 Ω
Output settling time	< 2 ms to 95% of final value with resistive loads
Calibrated accuracy @ 25 °C (77 °F)	0.05% of range immediately after calibration Better than 0.1% of range within calibration interval
Calibration interval	12 months
Offset drift	50 µV/° C 1 µA/° C
Gain drift with temperature	Voltage: 25 ppm/°C max Current: 50 ppm/°C max
Module error	Voltage: 0.2% of range Current: 0.3% of range
Update period for all channels (RPI), min	1 ms
Output conversion method	R-Ladder DAC, monotonicity with no missing codes

Environmental Specifications

Attribute	1756-IF4FXOF2F, 1756-IF4FXOF2FK
Temperature, operating IEC 60068-2-1 (Test Ae, Operating Cold), IEC 60068-2-2 (Test Be, Operating Dry Heat), IEC 60068-2-14 (Test Nb, Operating Thermal Shock)	0 °C ≤ Ta ≤ +60 °C (+32 °F ≤ Ta ≤ +140 °F)
Temperature, nonoperating IEC 60068-2-1 (Test Ab, Unpackaged Nonoperating Cold), IEC 60068-2-2 (Test Bb, Unpackaged Nonoperating Dry Heat), IEC 60068-2-14 (Test Na, Unpackaged Nonoperating Thermal Shock)	-40...+85 °C (-40...+185 °F)
Relative humidity IEC 60068-2-30 (Test dB, Unpackaged Damp Heat)	5...95% noncondensing
Vibration IEC 60068-2-6 (Test Fc, Operating)	2 g @ 10...500 Hz
Shock, operating IEC 60068-2-27 (Test Ea, Unpackaged Shock)	30 g
Shock, nonoperating IEC 60068-2-27 (Test Ea, Unpackaged Shock)	50 g
Emissions	IEC 61000-6-4
ESD immunity IEC 61000-4-2	6 kV contact discharges 8 kV air discharges
Radiated RF immunity IEC 61000-4-3	10V/m with 1 kHz sine wave 80% AM from 80...2000 MHz 10V/m with 200 Hz 50% Pulse 100% AM @ 900 MHz 10V/m with 200 Hz 50% Pulse 100% AM @ 1890 MHz 3V/m with 1 kHz sine wave 80% AM from 2000...2700 MHz 3V/m with 1 kHz sine wave 80% AM from 2700...6000 MHz
EFT/B immunity IEC 61000-4-4	±2 kV at 5 kHz and 100 kHz on shielded signal ports
Surge transient immunity IEC 61000-4-5	±2 kV line-earth (CM) on shielded signal ports
Conducted RF immunity IEC 61000-4-6	10V rms with 1 kHz sine wave 80% AM from 150 kHz...80 MHz

Certifications

Certification[1]	1756-IF4FXOF2F, 1756-IF4FXOF2FK
cULus	UL Listed Industrial Control Equipment, certified for US and Canada. See UL File E65584. UL Listed for Class I, Division 2 Group A,B,C,D Hazardous Locations, certified for U.S. and Canada. See UL File E194810.
FM	FM Approved Equipment for use in Class I Division 2 Group A,B,C,D Hazardous Locations
CE	European Union 2014/30/EU EMC Directive, compliant with: • EN 61326-1; Meas./Control/Lab., Industrial Requirements • EN 61000-6-2; Industrial Immunity • EN 61000-6-4; Industrial Emissions • EN 61131-2; Programmable Controllers (Clause 8, Zone A & B) European Union 2014/35/EU LVD, compliant with EN 61131-2; Programmable Controllers (Clause 11)
RCM	Australian Radiocommunications Act, compliant with EN 61000-6-4; Industrial Emissions
Ex	European Union 2014/34/EU ATEX Directive, compliant with: • IEC 60079-0 Edition 7; General Requirements • EN IEC 60079-7; Potentially Explosive Atmospheres, Protection "e" • II 3 G Ex ec IIC T4 X Gc • UL22ATEX2820
IECEx	IECEx System, compliant with: • IEC 60079-0 Edition 7; General Requirements • IEC 60079-7; Potentially Explosive Atmospheres, Protection "e" • II 3 G Ex ec IIC T4 Gc • IECEx UL 22.0039X
UKex	In conformity with the following UKex Statutory Instruments and their amendments: • Schedule 1 of the UKEX Regulation 2016 No. 1107 • Equipment protection by increased safety "e", reference certificate number UL22UKEX2499X • Zone 2 classification according to UKEX Regulation 2016 No. 1107
KC	Korean Registration of Broadcasting and Communications Equipment, compliant with Article 58-2 of Radio Waves Act, Clause 3
UKCA	In conformity with the following UK Statutory Instruments and their amendments: • 2016 No. 1091, Electromagnetic Compatibility Regulations • 2016 No. 1101, Electrical Equipment (Safety) Regulations • 2016 No. 1107, Equipment and Protective Systems Intended for Use in Potentially Explosive Atmospheres Regulations • 2012 No. 3032, Restriction of the Use of Certain Hazardous Substances in Electrical and Electronic Equipment
Morocco	In conformity with the following regulations: • Arrêté ministériel n° 6404-15 du 1 er muharram 1437 (15 octobre 2015) Équipements électriques destinés à être utilisés sous certaines limites de tension • Arrêté ministériel n° 6404-15 du 29 ramadan 1436 (16 juillet 2015) Compatibilité électromagnétique des équipements
CCC	CCC 2020122309111998 CNCA-C23-01 强制性产品认证实施规则 防爆电气 CNCA-C23-01 CCC Implementation Rule Explosion-Proof Electrical Products

(1) When product is marked. See the Product Certification link at rok.auto/certifications for Declarations of Conformity, Certificates, and other certification details.

1756-IF8, 1756-IF8K

ControlLogix current/voltage analog input module

1756-IF8 Differential Current

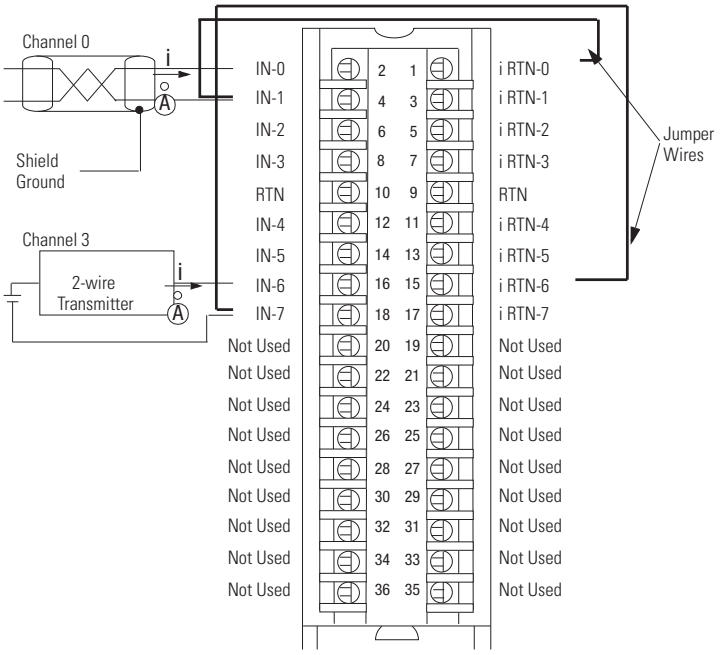

1756-IF8 Differential Voltage

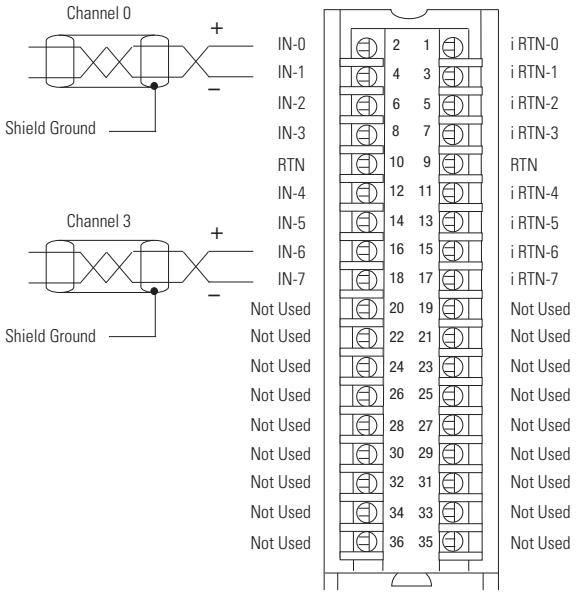

Use this table when wiring your module in Differential Current mode.

This Channel	Uses these terminals
Channel 0	IN-0 (+), IN-1 (-), i RTN-0
Channel 1	IN-2 (+), IN-3 (-), i RTN-2
Channel 2	IN-4 (+), IN-5 (-), i RTN-4
Channel 3	IN-6 (+), IN-7 (-), i RTN-6

- All terminals marked RTN are connected internally.
- A 249 Ω current loop resistor is located between IN-*x* and i RTN-*x* terminals.
- If multiple (+) or multiple (-) terminals are tied together, connect that tie point to an RTN terminal to maintain the module accuracy.
- Place additional loop devices (such as strip chart recorders) at the A location in the current loop.

IMPORTANT: When operating in 2-channel, High-Speed mode, only use channels 0 and 2.

Use this table when wiring your module in Differential Voltage mode.

This Channel	Uses these terminals
Channel 0	IN-0 (+), IN-1 (-)
Channel 1	IN-2 (+), IN-3 (-)
Channel 2	IN-4 (+), IN-5 (-)
Channel 3	IN-6 (+), IN-7 (-)

- All terminals marked RTN are connected internally.
- If multiple (+) or multiple (-) terminals are tied together, connect that tie point to an RTN terminal to maintain the module accuracy.
- Terminals marked RTN or i RTN are not used for differential voltage wiring.

IMPORTANT: When operating in 2-channel, High-Speed mode, only use channels 0 and 2.

1756-IF8 Single-ended Current

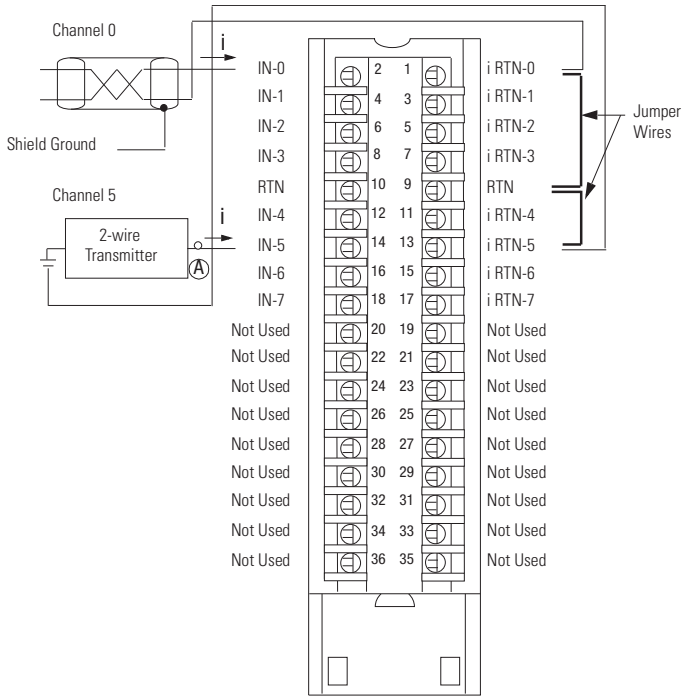

- All terminals marked RTN are connected internally.
- For current applications, all terminals marked i RTN must be wired to terminals marked RTN.
- A 249 Ω current loop resistor is located between IN-*x* and i RTN-*x* terminals.
- Place additional loop devices (such as strip chart recorders) at the A location in the current loop.

1756-IF8 Single-ended Voltage

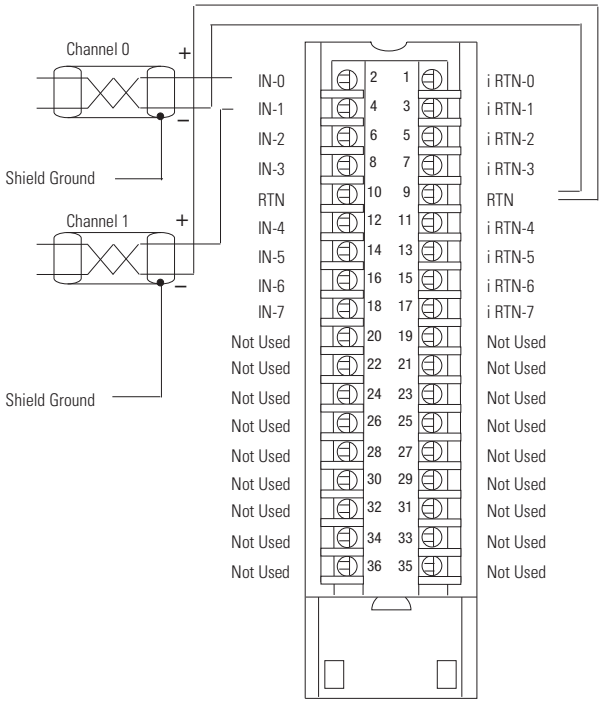

- All terminals marked RTN are connected internally.
- Terminals marked i RTN are not used for single-ended voltage wiring.

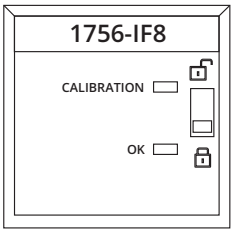

Technical Specifications

Attribute	1756-IF8, 1756-IF8K
Inputs	Eight single-ended Four differential Two high-speed differential
Input range	±10V 0...10V 0...5V 0...20 mA
Resolution	±10.25V: 320 µV/count (15 bits plus sign bipolar) 0...10.25V: 160 µV/count (16 bits) 0...5.125V: 80 µ/V count (16 bits) 0...20.5mA: 0.32 µA/count (16 bits)
Current draw @ 5.1V	200 mA
Current draw @ 24V	30 mA
Total backplane power	1.74 W

Technical Specifications (Continued)

Attribute	1756-IF8, 1756-IF8K
Voltage and current ratings	Backplane: 5.1V DC, 200 mA max, 24V DC, 30 mA max Input voltage range: -10...+10V Input current range: 0...20mA Limited to 100VA
Power consumption	1.73 W
Power dissipation	Voltage: 1.74 W Current 2.58 W
Thermal dissipation	Voltage: 5.94 BTU/hr Current: 8.79 BTU/hr
Input impedance	Voltage: ≥10 MΩ Current: 249 Ω
Open circuit detection time	Differential current or differential voltage: Positive full-scale reading within 5 s Single-ended current or single-ended voltage: Even-numbered channels go to positive full scale reading within 5 s, odd-numbered channels go to negative full scale reading within 5 s
Overvoltage protection, max	Voltage: 30V DC Current: 8V DC
Normal mode noise rejection	>80 dB @ 50/60 Hz(1)
Common mode noise rejection	>100 dB @ 50/60 Hz
Calibrated accuracy 25 °C (77 °F)	Voltage: Better than 0.05% of range Current: Better than 0.15% of range
Offset drift	45 µV/°C
Gain drift with temperature	Voltage: 15 ppm/°C Current: 20 ppm/°C
Module error	Voltage: 0.1% of range Current: 0.3% of range
Module input scan time, min(1)	8 pt single-ended (floating point): 16...488 ms 4 pt differential (floating point): 8...244 ms 2 pt differential (floating point): 5...122 m
Onboard data alarming	Yes
Scaling to engineering units	Yes
Real-time channel sampling	Yes
Data format	Integer mode (left justified, 2 s complement) IEEE 32-bit floating point
Module conversion method	Sigma-Delta
Isolation voltage	250V (continuous), Basic(2) insulation type, Inputs to Backplane. No isolation between individual Inputs.
Module keying	Electronic, software configurable
Removable terminal block	1756-TBCH 1756-TBS6H
RTB keying	User-defined mechanical
Slot width	1
Wire size	1756-TBCH
	Single wire connection: 0.33...2.1 mm^2 (22...14 AWG) solid or stranded shielded copper wire, rated at 105 °C (221 °F) or greater, 1.2 mm (3/64 in.) insulation max. Double wire connection: 0.33...1.3 mm^2 (22...16 AWG) solid or stranded copper wire, rated at 105 °C (221 °F) or greater, 1.2 mm (3/64 in.) insulation max.
	1756-TBS6H
	Single wire connection: 0.33...2.1 mm^2 (22...14 AWG) solid or stranded shielded copper wire, rated at 105 °C (221 °F) or greater, 1.2 mm (3/64 in.) insulation max.
Terminal block torque specs	1756-TBCH: 0.5 N•m (4.4 lb•in)
Wiring category	2 - on signal ports(3)
Enclosure type	None (open-style)
Temperature code	T4

(1) Notch filter dependent.
(2) Series A modules were specified to Reinforced Insulation based on UL508 terminology. Series B modules are type-type tested to the same Dielectric strength voltage as series A modules but use updated terminology based on IEC 61010-1, Basic Insulation.
(3) Use this Conductor Category information for planning conductor routing. See the Industrial Automation Wiring and Grounding Guidelines, publication 1770-4.1.

Environmental Specifications

Attribute	1756-IF8, 1756-IF8K
Temperature, operating IEC 60068-2-1 (Test Ae, Operating Cold), IEC 60068-2-2 (Test Be, Operating Dry Heat), IEC 60068-2-14 (Test Nb, Operating Variation of Temperature)	0 °C ≤ Ta ≤ +60 °C (+32 °F ≤ Ta ≤ +140 °F)
Temperature, nonoperating IEC 60068-2-1 (Test Ab, Unpackaged Nonoperating Cold), IEC 60068-2-2 (Test Bb, Unpackaged Nonoperating Dry Heat), IEC 60068-2-14 (Test Na, Unpackaged Nonoperating Thermal Shock)	-40...+85 °C (-40...+185 °F)
Relative humidity IEC 60068-2-30 (Test Db, Unpackaged Damp Heat)	5...95% noncondensing
Conformal Coated(1)	Yes
Corrosive Atmosphere(1) • ASTM B845-97 Method H Accelerated Test (20-Day Exposure)	Severity Level G3(2) per ANSI/ISA 71.04–2013, Airborne Contaminants—Gases Severity Level CX(2)(3) per IEC 60721-3-3:2019, Chemically Active Substances
Vibration IEC 60068-2-6 (Test Fc, Operating)	2 g @ 10...500 Hz
Shock, operating IEC 60068-2-27 (Test Ea, Unpackaged Shock)	30 g
Shock, nonoperating IEC 60068-2-27 (Test Ea, Unpackaged Shock)	30 g
Emissions	IEC 61000-6-4
ESD immunity IEC 61000-4-2	6 kV contact discharges 8 kV air discharges
Radiated RF immunity IEC 61000-4-3	10V/m with 1 kHz sine wave 80% AM from 80...2000 MHz 10V/m with 200 Hz 50% Pulse 100% AM @ 900 MHz 10V/m with 200 Hz 50% Pulse 100% AM @ 1890 MHz 3V/m with 1 kHz sine wave 80% AM from 2000...2700 MHz
EFT/B immunity IEC 61000-4-4	±2 kV at 5 kHz on signal ports
Surge transient immunity IEC 61000-4-5	±2 kV line-earth (CM) on shielded ports
Conducted RF immunity IEC 61000-4-6	10V rms with 1 kHz sine wave 80% AM from 150 kHz...80 MHz

(1) Only applicable to modules that end with a 'K' or 'XT'.
(2) The module and the corresponding RTB must remain installed at all times and the RTB door must remain closed, for the product to maintain its corrosive atmosphere rating.
(3) Up to 9.6 microns per year, corrosion rate of copper.

Certifications

Certification[1]	1756-IF8, 1756-IF8K
cULus	UL Listed Industrial Control Equipment, certified for US and Canada. See UL File E65584. UL Listed for Class I, Division 2 Group A,B,C,D Hazardous Locations, certified for U.S. and Canada. See UL File E194810.
FM	FM Approved Equipment for use in Class I Division 2 Group A, B, C, D Hazardous Locations
CE	European Union 2014/30/EU EMC Directive, compliant with: • EN 61326-1; Meas./Control/Lab., Industrial Requirements • EN 61000-6-2; Industrial Immunity • EN 61000-6-4; Industrial Emissions • EN 61131-2; Programmable Controllers (Clause 8, Zone A & B) European Union 2014/35/EU LVD, compliant with EN 61131-2; Programmable Controllers (Clause 11)
RCM	Australian Radiocommunications Act, compliant with EN 61000-6-4; Industrial Emissions
Ex	European Union 2014/34/EU ATEX Directive, compliant with: • EN IEC 60079-0; General Requirements • EN IEC 60079-7; Potentially Explosive Atmospheres, Protection "e" • II 3 G Ex ec IIC T4 Gc • UL 22 ATEX 2772X
IECEx	IECEx System, compliant with: • IEC 60079-0; General Requirements • IEC 60079-7; Potentially Explosive Atmospheres, Protection "e" • II 3 G Ex ec IIC T4 Gc • IECEx UL 22.0039X
KC	Korean Registration of Broadcasting and Communications Equipment, compliant with Article 58-2 of Radio Waves Act, Clause 3
UKex	In conformity with the following UKex Statutory Instruments and their amendments: • Schedule 1 of the UKEX Regulation 2016 No. 1107 • Equipment protection by increased safety "e", reference certificate number UL22UKEX2499X • Zone 2 classification according to UKEX Regulation 2016 No. 1107
UKCA	In conformity with the following UK Statutory Instruments and their amendments: • 2016 No. 1091, Electromagnetic Compatibility Regulations • 2016 No. 1101, Electrical Equipment (Safety) Regulations • 2016 No. 1107, Equipment and Protective Systems Intended for Use in Potentially Explosive Atmospheres Regulations • 2012 No. 3032, Restriction of the Use of Certain Hazardous Substances in Electrical and Electronic Equipment
Morocco	In conformity with the following regulations: • Arrêté ministériel n° 6404-15 du 1 er muharram 1437 (15 octobre 2015) Équipements électriques destinés à être utilisés sous certaines limites de tension • Arrêté ministériel n° 6404-15 du 29 ramadan 1436 (16 juillet 2015) Compatibilité électromagnétique des équipements
CCC	CCC 2020122309111998 CNCA-C23-01 强制性产品认证实施规则 防爆电气 CNCA-C23-01 CCC Implementation Rule Explosion-Proof Electrical Products

(1) When product is marked. See the Product Certification link at rok.auto/certifications for Declarations of Conformity, Certificates, and other certification details.

1756-IF8I, 1756-IF8IK

ControlLogix isolated voltage/current analog input module

1756-IF8I Module Wiring Diagram -Current Mode with External Loop Power

IMPORTANT: Remember the following:
- In this wiring diagram, an external, user-provided power supply provides 24V DC loop power.
- If separate power sources are used, do not exceed the specific isolation voltage as listed in the specifications.
- Place additional loop devices, for example, strip chart recorders, at either 'A' location in the current loop.

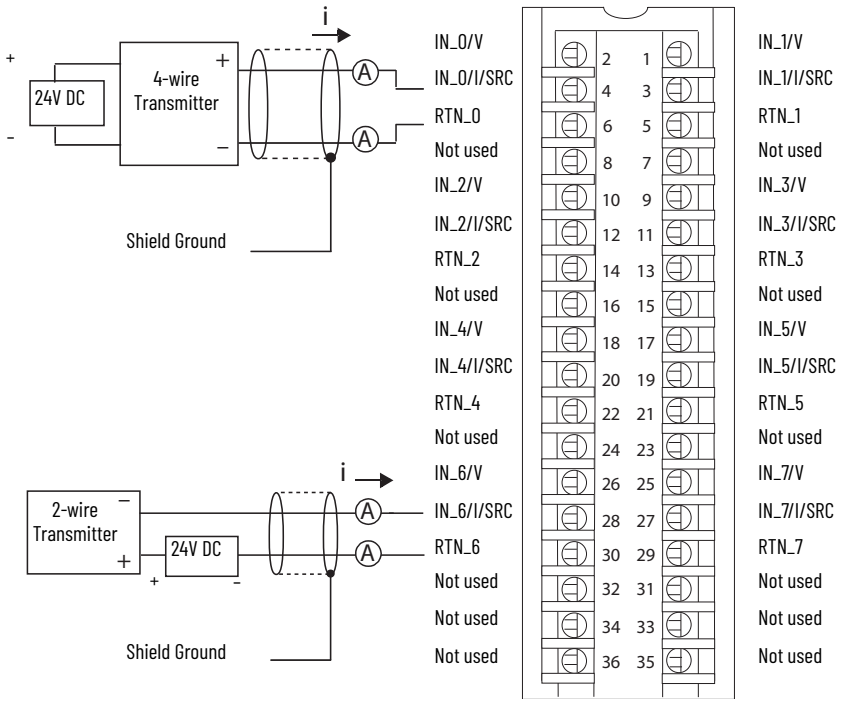

1756-IF8I Module Wiring Diagram -Current Mode with Internal Loop Power

IMPORTANT: Remember the following:
- In this wiring diagram, the module provides 24V DC loop power.
- If separate power sources are used, do not exceed the specific isolation voltage as listed in the specifications.
- Place additional loop devices, for example, strip chart recorders, at either 'A' location in the current loop.

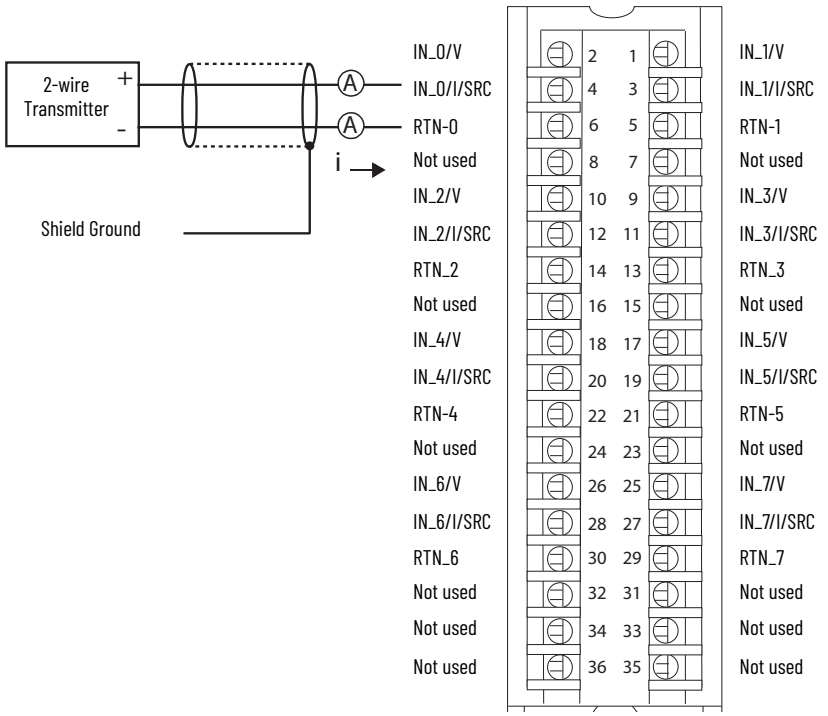

1756-IF8I Module Wiring Diagram - Voltage Mode

IMPORTANT: If separate power sources are used, do not exceed the specific isolation voltage as listed in the specifications.

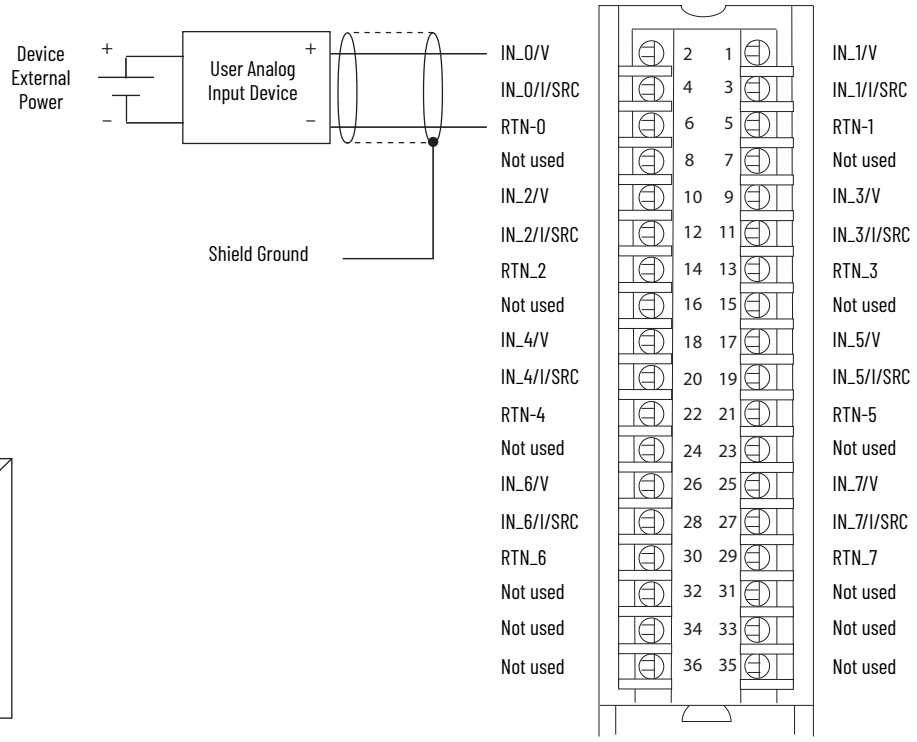

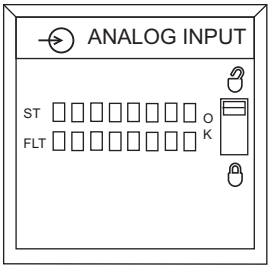

Technical Specifications

Attribute	1756-IF8I, 1756-IF8IK
Inputs	Eight isolated channels - Any combination of Voltage or Current mode
Voltage and current ratings	Backplane: 5.1V DC 200 mA, 24V DC 400 mA Input Voltage: -10V to +10V, 0V to 10V, 0V to 5V Input Current: 0...20 mA Output Current: 0...20 mA
Input ranges	-10...10V 0...10V 0...5V 0...20 mA
Resolution	24-bit ±10.5V (1.49 µV/count) 0...10.5V (1.49 µV/count) 0...5.25V (1.49 µV/count) 0...21 mA (2.99 nA/count)
Current draw @ 5.1V	200 mA
Current draw @ 24V	Voltage/Non-sourcing Current mode: 150 mA Sourcing Current mode: 400 mA (In Sourcing Current mode, the channel provides loop power.)
Total backplane power	Voltage/Non-sourcing Current mode: 4.6 W Sourcing Current mode: 10.6 W
Power dissipation	Voltage mode: 4.6 W (15.7 BTU/hr) Non-sourcing Current mode: 5.1 W (17.4 BTU/hr) Sourcing Current mode: 7.3 W (24.9 BTU/hr)
Thermal dissipation	Voltage mode: 15.7 BTU/hr Non-sourcing Current mode: 17.4 BTU/hr Sourcing Current mode: 24.9 BTU/hr
Input impedance, approx	Voltage mode: 1 G Ω (powered); 7500 Ω (unpowered) Current mode: 125 Ω
Sourcing voltage, min	20V DC
Sourcing voltage, max	36V DC (open circuit)
Sourcing current, max	Current Limited < 45 mA (IN_x/I/SRC to RTN_x)

Technical Specifications (Continued)

Attribute	1756-IF8I, 1756-IF8IK
Open circuit detection time	5 s
Overvoltage protection, max	±30V DC
Normal mode noise rejection	80 dB @ 60 Hz(1)
Common mode noise rejection	120 dB @ 50/60 Hz
Channel bandwidth	Notch filter configuration dependent See publication 1756-UM540 for possible values.
Settling time	Notch filter configuration dependent See publication 1756-UM540 for possible values.
Calibrated accuracy 25 °C (77 °F)	0.05%
Module error over full temperature range	0.1%
Module input scan time, min	1 ms
Onboard data alarming	Yes
Scaling to engineering units	Yes
Real-time channel sampling	Yes - Rate set by Requested Packet Interval rate
Data format	IEEE 32-bit floating point
Module conversion method	Sigma-Delta
Isolation voltage	250V (continuous), reinforced insulation type, inputs to backplane 250V (continuous), basic insulation type, input to input Type tested at 3000V AC for 60 s, inputs to backplane Type tested at 1500V AC for 60 s, input to input
Module keying	Electronic, software configurable
Removable terminal block	1756-TBCH 1756-TBS6H
RTB keying	User-defined mechanical
Slot width	1
Wire size	1756-TBCH
	Single wire connection: 0.33...2.1 mm^2 (22...14 AWG) solid or stranded shielded copper wire rated at 105 °C (221 °F), or greater, 1.2 mm (3/64 in.) insulation max. Double wire connection: 0.33...1.3 mm^2 (22...16 AWG) solid or stranded copper wire rated at 105 °C (221 °F), or greater, 1.2 mm (3/64 in.) insulation max.
	1756-TBS6H
	Single wire connection: 0.33...2.1 mm^2 (22...14 AWG) solid or stranded shielded copper wire rated at 105 °C (221 °F), or greater, 1.2 mm (3/64 in.) insulation max.
Terminal block torque specs	1756-TBCH: 0.5 N•m (4.4 lb•in)
Wire category	2 on signal ports(2)
Enclosure type	None (open-style)
Temperature code	T4

(1) Notch filter dependent.
(2) Use this conductor category information for planning conductor routing as described in the system-level installation manual. See the Industrial Automation Wiring and Grounding Guidelines, publication 1770-4.1.

Environmental Specifications

Attribute	1756-IF8I, 1756-IF8IK
Temperature, operating IEC 60068-2-1 (Test Ae, Operating Cold), IEC 60068-2-2 (Test Be, Operating Dry Heat), IEC 60068-2-14 (Test Nb, Operating Thermal Shock)	0 °C ≤ Ta ≤ +60 °C (+32 °F ≤ Ta ≤ +140 °F)
Temperature, nonoperating IEC 60068-2-1 (Test Ab, Unpackaged Nonoperating Cold), IEC 60068-2-2 (Test Bb, Unpackaged Nonoperating Dry Heat), IEC 60068-2-14 (Test Na, Unpackaged Nonoperating Thermal Shock)	-40...+85 °C (-40...+185 °F)
Relative humidity IEC 60068-2-30 (Test dB, Unpackaged Damp Heat)	5...95% noncondensing
Conformal Coated(1)	Yes
Corrosive Atmosphere(1) ASTM B845-97 Method H Accelerated Test (20-Day Exposure)	Severity Level G3(2) per ANSI/ISA 71.04-2013, Airborne Contaminants—Gases Severity Level CX(2)(3) per IEC 60721-3-3:2019, Chemically Active Substances
Vibration IEC 60068-2-6 (Test Fc, Operating)	2 g @ 10...500 Hz
Shock, operating IEC 60068-2-27 (Test Ea, Unpackaged Shock)	30 g
Shock, nonoperating IEC 60068-2-27 (Test Ea, Unpackaged Shock)	50 g
Emissions	IEC 61000-6-4
ESD immunity IEC 61000-4-2	±8 kV contact discharges ±8 kV air discharges
Radiated RF immunity IEC 61000-4-3	20V/m with 1 kHz sine wave 80% AM from 80...1000 MHz 10V/m with 1 kHz sine wave 80% AM from 1000...2000 MHz 3V/m with 1 kHz sine wave 80% AM from 2000...6000 MHz
EFT/B immunity IEC 61000-4-4	±4 kV at 5 kHz and 100 kHz on shielded signal ports
Surge transient immunity IEC 61000-4-5	±2 kV line-earth (CM) on shielded signal ports
Conducted RF immunity IEC 61000-4-6	20V rms with 1 kHz sine wave 80% AM from 150 kHz...80 MHz

(1) Only applicable to modules that end with a 'K' or 'XT'.
(2) The module and the corresponding RTB must remain installed at all times and the RTB door must remain closed, for the product to maintain its corrosive atmosphere rating.
(3) Up to 9.6 microns per year, corrosion rate of copper.

Certifications

Certification[1]	1756-IF8I, 1756-IF8IK
cULus	UL Listed Industrial Control Equipment, certified for US and Canada. See UL File E65584. UL Listed for Class I, Division 2 Group A,B,C,D Hazardous Locations, certified for U.S. and Canada. See UL File E194810.
CE	European Union 2014/30/EU EMC Directive, compliant with: • EN 61326-1; Meas./Control/Lab., Industrial Requirements • EN 61000-6-2; Industrial Immunity • EN 61000-6-4; Industrial Emissions • EN 61131-2; Programmable Controllers (Clause 8, Zone A & B) European Union 2014/35/EU LVD, compliant with EN 61131-2; Programmable Controllers (Clause 11)
RCM	Australian Radiocommunications Act, compliant with EN 61000-6-4; Industrial Emissions
Ex	European Union 2014/34/EU ATEX Directive, compliant with: • EN IEC 60079-0 Edition 7; General Requirements • EN IEC 60079-7; Potentially Explosive Atmospheres, Protection "e" • II 3 G Ex ec IIC T4 Gc • UL 22 ATEX 2772X
IECEx	IECEx System, compliant with: • IEC 60079-0 Edition 7; General Requirements • IEC 60079-7; Potentially Explosive Atmospheres, Protection "e" • II 3 G Ex ec IIC T4 Gc • IECEx UL 22.0039X
UKex	In conformity with the following UKex Statutory Instruments and their amendments: • Schedule 1 of the UKEX Regulation 2016 No. 1107 • Equipment protection by increased safety "e", reference certificate number UL22UKEX2499X • Zone 2 classification according to UKEX Regulation 2016 No. 1107
KC	Korean Registration of Broadcasting and Communications Equipment, compliant with Article 58-2 of Radio Waves Act, Clause 3
UKCA	In conformity with the following UK Statutory Instruments and their amendments: • 2016 No. 1091, Electromagnetic Compatibility Regulations • 2016 No. 1101, Electrical Equipment (Safety) Regulations • 2016 No. 1107, Equipment and Protective Systems Intended for Use in Potentially Explosive Atmospheres Regulations • 2012 No. 3032, Restriction of the Use of Certain Hazardous Substances in Electrical and Electronic Equipment
Morocco	In conformity with the following regulations: • Arrêté ministériel n° 6404-15 du 1 er muharram 1437 (15 octobre 2015) Équipements électriques destinés à être utilisés sous certaines limites de tension • Arrêté ministériel n° 6404-15 du 29 ramadan 1436 (16 juillet 2015) Compatibilité électromagnétique des équipements
CCC	CCC 2020122309111998 CNCA-C23-01 强制性产品认证实施规则 防爆电气 CNCA-C23-01 CCC Implementation Rule Explosion-Proof Electrical Products

(1) When product is marked. See the Product Certification link at rok.auto/certifications for Declarations of Conformity, Certificates, and other certification details.

1756-IF16, 1756-IF16K

ControlLogix current/voltage analog input module

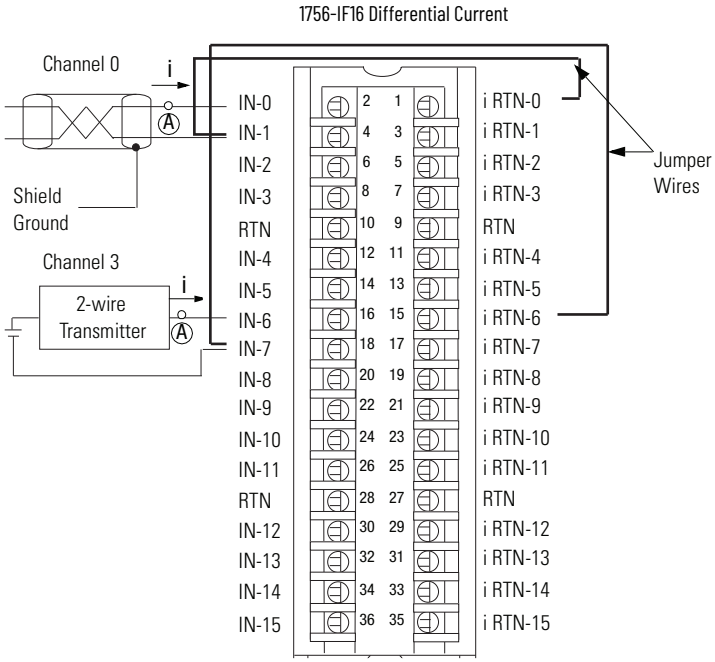

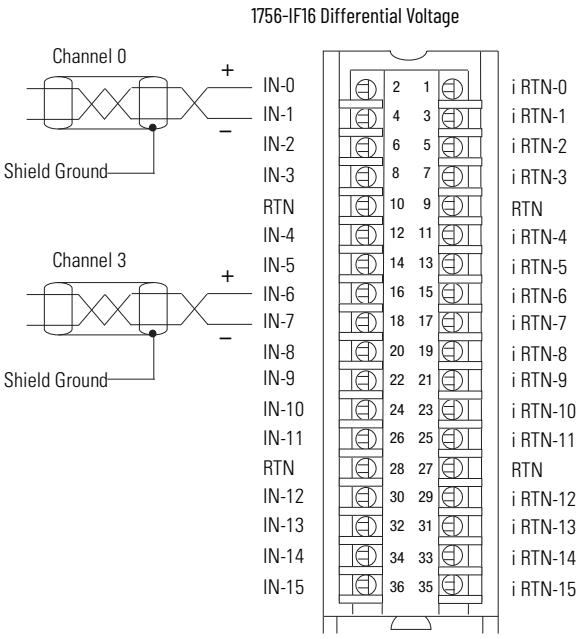

Use this table when wiring your module in Differential Current mode.

This Channel	Uses these terminals
Channel 0	IN-0 (+), IN-1 (-), i RTN-0
Channel 1	IN-2 (+), IN-3 (-), i RTN-2
Channel 2	IN-4 (+), IN-5 (-), i RTN-4
Channel 3	IN-6 (+), IN-7 (-), i RTN-6
Channel 4	IN-8 (+), IN-9 (-), i RTN-8
Channel 5	IN-10 (+), IN-11 (-), i RTN-10
Channel 6	IN-12 (+), IN-13 (-), i RTN-12
Channel 7	IN-14 (+), IN-15 (-), i RTN-14

- All terminals marked RTN are connected internally.
- A 249 Ω current loop resistor is located between IN-*x* and i RTN-*x* terminals.
- If multiple (+) or multiple (-) terminals are tied together, connect that tie point to an RTN terminal to maintain the accuracy of the module.
- Place additional loop devices (such as strip chart recorders) at the A location in the current loop.

IMPORTANT: When operating in 4-channel, High-Speed mode, only use channels 0, 2, 4, and 6.

Use this table when wiring your module in Differential Voltage mode.

This Channel	Uses these terminals
Channel 0	IN-0 (+), IN-1 (-)
Channel 1	IN-2 (+), IN-3 (-)
Channel 2	IN-4 (+), IN-5 (-)
Channel 3	IN-6 (+), IN-7 (-)
Channel 4	IN-8 (+), IN-9 (-)
Channel 5	IN-10 (+), IN-11 (-)
Channel 6	IN-12 (+), IN-13 (-)
Channel 7	IN-14 (+), IN-15 (-)

- All terminals marked RTN are connected internally.
- If multiple (+) or multiple (-) terminals are tied together, connect that tie point to an RTN terminal to maintain the accuracy of the module.
- Terminals marked RTN or i RTN are not used for differential voltage wiring.

IMPORTANT: When operating in 4-channel, High-Speed mode, only use channels 0, 2, 4, and 6.

1756-IF16 Single-ended Current

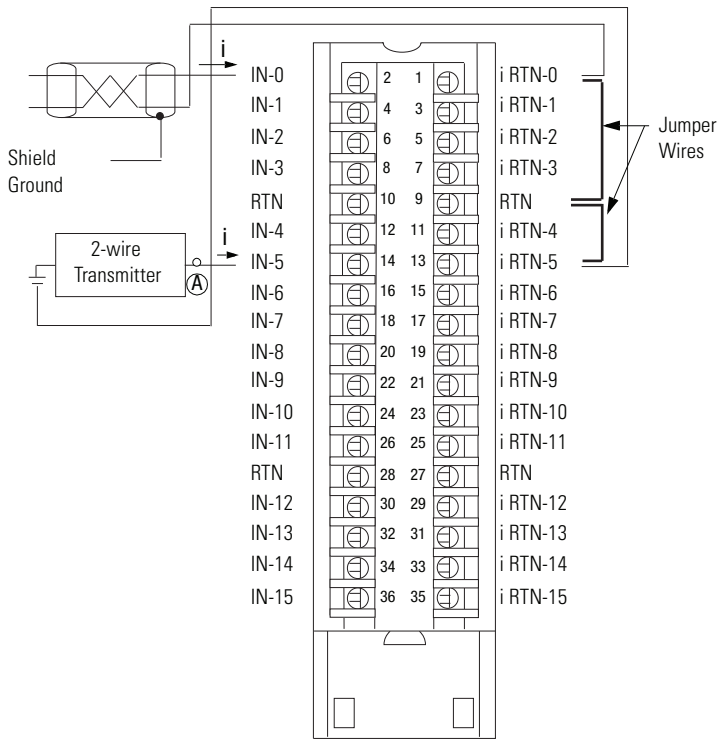

- All terminals marked RTN are connected internally.
- For current applications, all terminals marked i RTN must be wired to terminals marked RTN.
- A 249 Ω current loop resistor is located between IN-*x* and i RTN-*x* terminals.
- Place additional loop devices (such as strip chart recorders) at the A location in the current loop.

1756-IF16 Single-ended Voltage

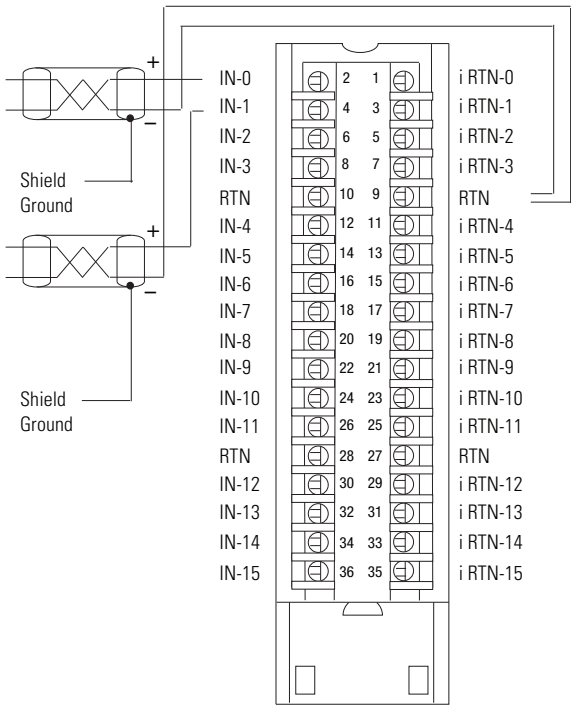

- All terminals marked RTN are connected internally.
- Terminals marked i RTN are not used for single-ended voltage wiring.

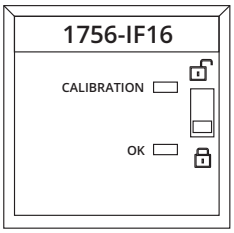

Technical Specifications

Attribute	1756-IF16, 1756-IF16K
Inputs	16 single ended, 8 differential or 4 differential (high speed)
Input range	±10V 0...10V 0...5V 0...20 mA
Resolution	320 µV/count (15 bits + sign bipolar) @ ±10.25V 160 µV/count (16 bits) @ 0...10.25V 80 µV/count (16 bits) @ 0...5.125V 0.32 µA/count (16 bits) @ 0...20.5 mA
Current draw @ 5.1V	200 mA
Current draw @ 24V	35 mA
Total backplane power	1.86 W

Technical Specifications (Continued)

Attribute	1756-IF16, 1756-IF16K
Voltage and current ratings	Backplane: 5.1V DC, 200 mA max 24V DC, 35 mA max Input Voltage Range: -10...+10V Input Current Range: 0...20mA Limited to 100VA
Power consumption	2.33 W
Power dissipation	Voltage: 1.86 W Current: 3.53 W
Thermal dissipation	Voltage: 6.35 BTU/hr Current: 12.06 BTU/hr
Input impedance	Voltage: ≥10 MΩ Current: 249 Ω
Open circuit detection time	Differential current or differential voltage: Positive full-scale reading within 5 s Single-ended current or single-ended voltage: Even-numbered channels go to positive full scale reading within 5 s, odd-numbered channels go to negative full scale reading within 5 s
Overvoltage protection, max	Voltage: 30V DC Current: 8V DC
Normal mode noise rejection	>80 dB @ 50/60 Hz(1)
Common mode noise rejection	>100 dB @ 50/60 Hz
Channel bandwidth	15 Hz (-3 dB)(1)
Calibrated accuracy 25 °C (77 °F)	Voltage: Better than 0.05% of range Current: Better than 0.15% of range
Offset drift	45 µV/°C
Gain drift with temperature	Voltage: 15 ppm/°C Current: 20 ppm/°C
Module error	Voltage: 0.1% of range Current: 0.3% of range
Module input scan time, min(1)	16 pt single-ended: 16...488 ms 8 pt differential: 8...244 ms 4 pt differential: 5...122 ms
Onboard data alarming	Yes
Scaling to engineering units	Yes
Real-time channel sampling	Yes
Data format	Integer mode (left justified, 2 s complement) IEEE 32-bit floating point
Module conversion method	Sigma-Delta
Isolation voltage	250V (continuous), Basic(2) insulation type, Inputs-to-Backplane. No isolation between individual Inputs.
Module keying	Electronic, software configurable
Removable terminal block	1756-TBCH 1756-TBS6H
RTB keying	User-defined mechanical
Slot width	1
Wire size	1756-TBCH
	Single wire connection: 0.33...2.1 mm^2 (22...14 AWG) solid or stranded shielded copper wire rated at 105 °C (221 °F), or greater, 1.2 mm (3/64 in.) insulation max. Double wire connection: 0.33...1.3 mm^2 (22...16 AWG) solid or stranded copper wire rated at 105 °C (221 °F), or greater, 1.2 mm (3/64 in.) insulation max.
	1756-TBS6H
	Single wire connection: 0.33...2.1 mm^2 (22...14 AWG) solid or stranded shielded copper wire rated at 105 °C (221 °F), or greater, 1.2 mm (3/64 in.) insulation max.
Terminal block torque specs	1756-TBCH 0.5 N•m (4.4 lb•in)
Wire category(3)	2 - on signal ports
Enclosure type	None (open-style)
Temperature code	T4

(1) Notch filter dependent.
(2) Series A modules were specified to Reinforced Insulation based on UL508 terminology. Series B modules are type-type tested to the same Dielectric strength voltage as series A modules but use updated terminology based on IEC 61010-1, Basic Insulation.
(3) Use this Conductor Category information for planning conductor routing. See the Industrial Automation Wiring and Grounding Guidelines, publication 1770-4.1.

Environmental Specifications

Attribute	1756-IF16, 1756-IF16K
Temperature, operating IEC 60068-2-1 (Test Ae, Operating Cold), IEC 60068-2-2 (Test Be, Operating Dry Heat), IEC 60068-2-14 (Test Nb, Operating Variation of Temperature)	0 °C ≤ Ta ≤ +60 °C (+32 °F ≤ Ta ≤ +140 °F)
Temperature, nonoperating IEC 60068-2-1 (Test Ab, Unpackaged Nonoperating Cold), IEC 60068-2-2 (Test Bb, Unpackaged Nonoperating Dry Heat), IEC 60068-2-14 (Test Na, Unpackaged Nonoperating Thermal Shock)	-40...+85 °C (-40...+185 °F)
Relative humidity IEC 60068-2-30 (Test Db, Unpackaged Damp Heat)	5...95% noncondensing
Conformal Coated(1)	Yes
Corrosive Atmosphere(1) ASTM B845-97 Method H Accelerated Test (20-Day Exposure)	Severity Level G3(2) per ANSI/ISA 71.04-2013, Airborne Contaminants—Gases Severity Level CX(2)(3) per IEC 60721-3-3:2019, Chemically Active Substances
Vibration IEC 60068-2-6 (Test Fc, Operating)	2 g @ 10...500 Hz
Shock, operating IEC 60068-2-27 (Test Ea, Unpackaged Shock)	30 g
Shock, nonoperating IEC 60068-2-27 (Test Ea, Unpackaged Shock)	30 g
Emissions	IEC 61000-6-4
ESD immunity IEC 61000-4-2	6 kV contact discharges 8 kV air discharges
Radiated RF immunity IEC 61000-4-3	10V/m with 1 kHz sine wave 80% AM from 80...2000 MHz 10V/m with 200 Hz 50% Pulse 100% AM @ 900 MHz 10V/m with 200 Hz 50% Pulse 100% AM @ 1890 MHz 3V/m with 1 kHz sine wave 80% AM from 2000...2700 MHz
EFT/B immunity IEC 61000-4-4	±2 kV at 5 kHz on signal ports
Surge transient immunity IEC 61000-4-5	±2 kV line-earth (CM) on shielded ports
Conducted RF immunity IEC 61000-4-6	10V rms with 1 kHz sine wave 80% AM from 150 kHz...80 MHz

(1) Only applicable to modules that end with a 'K' or 'XT'.
(2) The module and the corresponding RTB must remain installed at all times and the RTB door must remain closed, for the product to maintain its corrosive atmosphere rating.
(3) Up to 9.6 microns per year, corrosion rate of copper.

Certifications

Certification[1]	1756-IF16, 1756-IF16K
cULus	UL Listed Industrial Control Equipment, certified for US and Canada. See UL File E65584. UL Listed for Class I, Division 2 Group A,B,C,D Hazardous Locations, certified for U.S. and Canada. See UL File E194810.
FM	FM Approved Equipment for use in Class I Division 2 Group A, B, C, D Hazardous Locations
CE	European Union 2014/30/EU EMC Directive, compliant with: • EN 61326-1; Meas./Control/Lab., Industrial Requirements • EN 61000-6-2; Industrial Immunity • EN 61000-6-4; Industrial Emissions • EN 61131-2; Programmable Controllers (Clause 8, Zone A & B) European Union 2014/35/EU LVD, compliant with EN 61131-2; Programmable Controllers (Clause 11)
RCM	Australian Radiocommunications Act, compliant with EN 61000-6-4; Industrial Emissions
Ex	European Union 2014/34/EU ATEX Directive, compliant with: • EN IEC 60079-0; General Requirements • EN IEC 60079-7; Potentially Explosive Atmospheres, Protection "e" • II 3 G Ex ec IIC T4 Gc • UL 22 ATEX 2772X
IECEx	IECEx System, compliant with: • IEC 60079-0; General Requirements • IEC 60079-7; Potentially Explosive Atmospheres, Protection "e" • II 3 G Ex ec IIC T4 Gc • IECEx UL 22.0039X
KC	Korean Registration of Broadcasting and Communications Equipment, compliant with Article 58-2 of Radio Waves Act, Clause 3
UKex	In conformity with the following UKex Statutory Instruments and their amendments: • Schedule 1 of the UKEX Regulation 2016 No. 1107 • Equipment protection by increased safety "e", reference certificate number UL22UKEX2499X • Zone 2 classification according to UKEX Regulation 2016 No. 1107
UKCA	In conformity with the following UK Statutory Instruments and their amendments: • 2016 No. 1091, Electromagnetic Compatibility Regulations • 2016 No. 1101, Electrical Equipment (Safety) Regulations • 2016 No. 1107, Equipment and Protective Systems Intended for Use in Potentially Explosive Atmospheres Regulations • 2012 No. 3032, Restriction of the Use of Certain Hazardous Substances in Electrical and Electronic Equipment
Morocco	In conformity with the following regulations: • Arrêté ministériel n° 6404-15 du 1 er muharram 1437 (15 octobre 2015) Équipements électriques destinés à être utilisés sous certaines limites de tension • Arrêté ministériel n° 6404-15 du 29 ramadan 1436 (16 juillet 2015) Compatibilité électromagnétique des équipements
CCC	CCC 2020122309111998 CNCA-C23-01 强制性产品认证实施规则 防爆电气 CNCA-C23-01 CCC Implementation Rule Explosion-Proof Electrical Products

(1) When product is marked. See the Product Certification link at rok.auto/certifications for Declarations of Conformity, Certificates, and other certification details.

1756-IRT8I, 1756-IRT8IK

ControlLogix isolated RTD/Thermocouple analog input module.

1756-IRT8I Module Wiring Diagram - 3-wire RTD Input

IMPORTANT: Remember the following:
- If separate power sources are used, do not exceed the specific isolation voltage as listed in the specifications.
- Terminals 1, 2, 35, and 36 are not used in RTD applications.
- For 2-wire resistor applications including calibration, make sure IN_x(-)/B and IN_x/RTD C are shorted together.

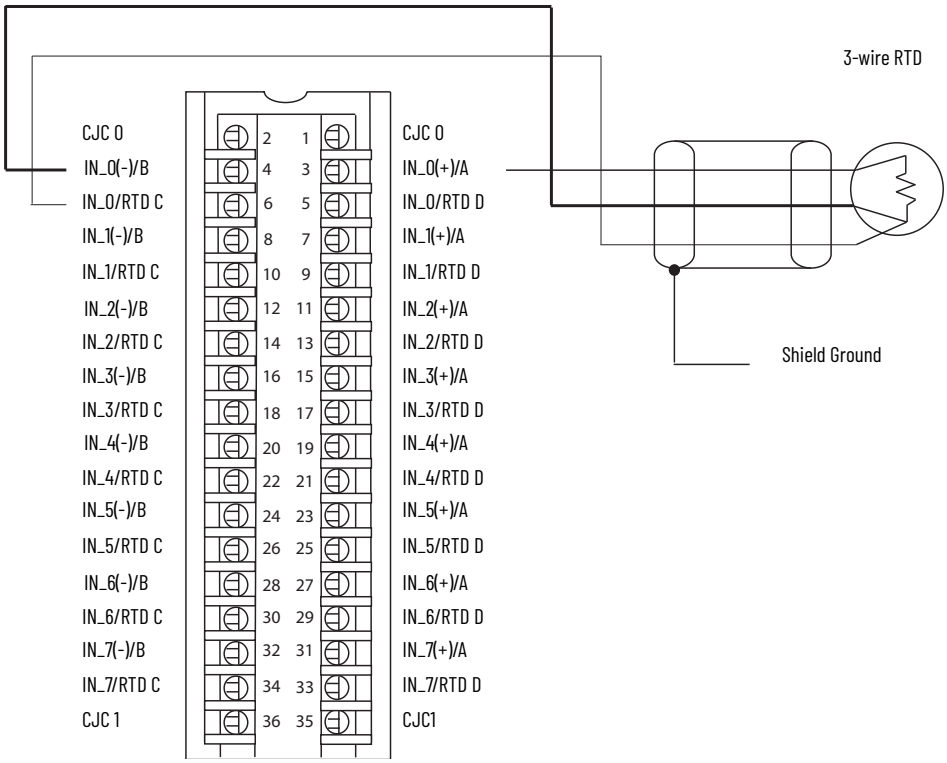

1756-IRT8I Module Wiring Diagram - 4-wire RTD Input

IMPORTANT: Remember the following:
- If separate power sources are used, do not exceed the specific isolation voltage as listed in the specifications.
- Terminals 1, 2, 35, and 36 are not used in RTD applications.

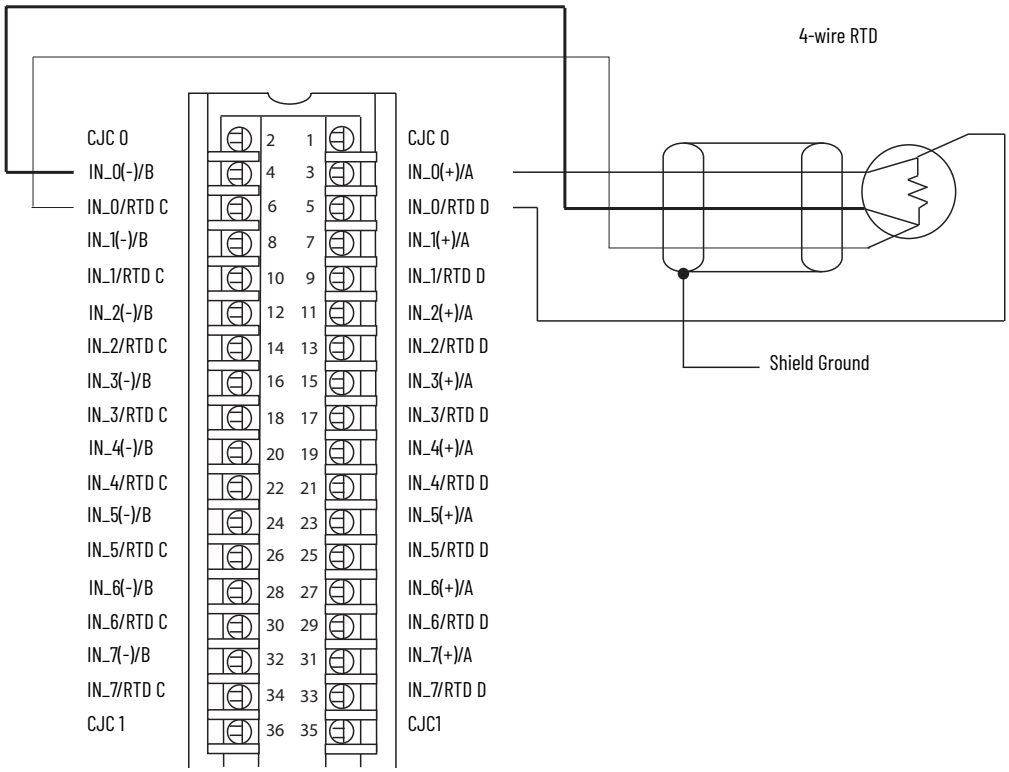

1756-IRT8I Module Wiring Diagram - Thermocouple Input

IMPORTANT: Remember the following:

- Connect the white end of the CJC sensor to the even-numbered terminal. Connect the orange end of the CJC sensor to the odd-numbered terminals.

  For CJC 0:
  - White end - Connected to terminal number 2
  - Orange end - Connected to terminal number 1

  For CJC 1:
  - White end - Connected to terminal number 36
  - Orange end - Connected to terminal number 35

- CJC sensors do not come with the module. You must order the sensors, product catalog number 1756-CJC, separately.
- If separate power sources are used, do not exceed the specific isolation voltage as listed in the specifications.
- CJC sensors are only required with use of the Thermocouple input type and when channel wiring is connected via an RTB.
- CJC sensors are not needed when using IFM as it has built-in CJC sensor.
- You cannot use CJC and connect a CJC sensor to only one channel.

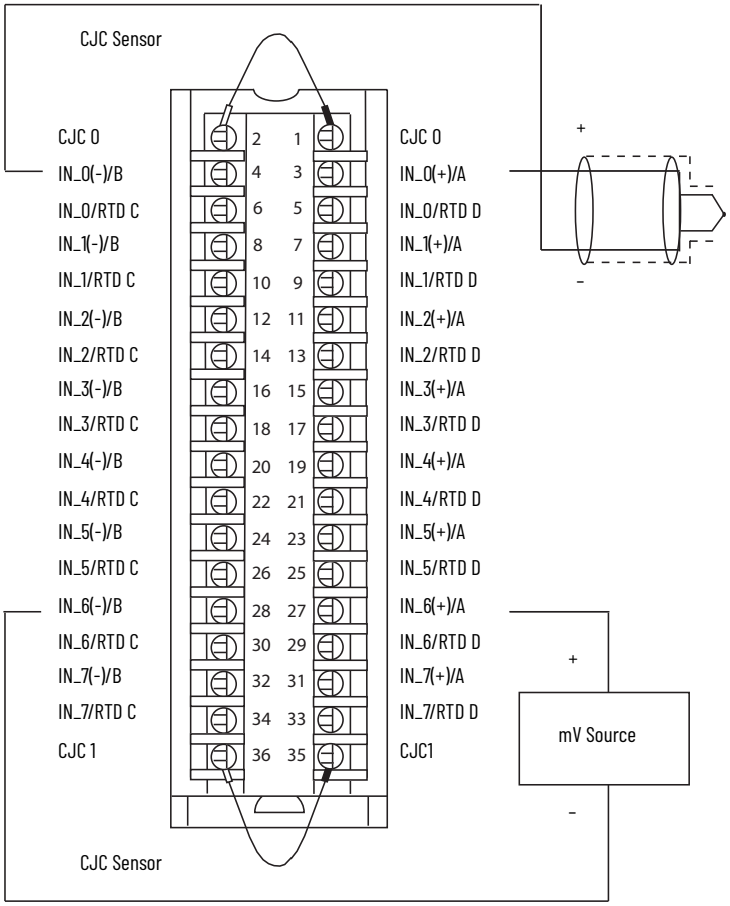

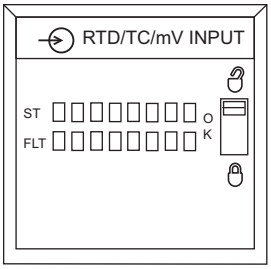

Technical Specifications

Attribute	1756-IRT8I/A, 1756-IRT8IK/A	1756-IRT8I/B, 1756-IRT8IK/B
Inputs	Eight isolated channels - Any combination of RTD or Thermocouple mode Two CJC sensors for Thermocouple use. The CJC sensors, product catalog number 1756-CJC, do not come with the module. You must order the sensors separately.	
Input range	1...500 Ω 2...1000 Ω 4...2000 Ω 8...4000 Ω -100...+100 mV	
Resolution	24 bits 0...510 Ω: 0.06 mΩ/count 0...1020 Ω: 0.12 mΩ/count 0...2040 Ω: 0.25 mΩ/count 0...4080 Ω: 0.50 mΩ/count -101...+101 mV: 0.01 µV/count	
RTD sensors supported	100, 200, 500, 1000 Ω Platinum, alpha=385 100, 200, 500, 1000 Ω Platinum, alpha=3916 120 Ω Nickel, alpha=672 100, 120, 200, 500 Ω Nickel, alpha=618 10 Ω Copper, alpha=427	
Thermocouple types	B, C, D, E, J, K, N, R, S, T, TXK/XK (L)	
Thermocouple linearization	ITS-90	
Current draw @ 5.1V	200 mA	210 mA
Current draw @ 24V	150 mA	
Total backplane power	4.6 W	4.67 W

Technical Specifications (Continued)

Attribute	1756-IRT8I/A, 1756-IRT8IK/A	1756-IRT8I/B, 1756-IRT8IK/B
Voltage and current ratings	Backplane: 5.IV DC, 200 mA, 24V DC, I50 mA Input: 1...4000 Ohms, +/—I00 mV, Thermocouple; B,C,E,J,K,R,S,T,N,D,L	Backplane: 5.1V DC, 210 mA, 24V DC, 150 mA Input: 1...4000 Ohms, +/-100 mV, Thermocouple; B,C,E,J,K,R,S,T,N,D,L
Power dissipation, max	4.6 W(15.7 BTU/hr)	4.67 W (15.9 BTU/hr)
Thermal dissipation	15.7 BTU/hr	15.9 BTU/hr
RTD excitation current	600 µA	
Input impedance, approx	1 GΩ	
Open circuit detection time	Thermocouple input and 3-wire RTD input = 2 s 4-wire RTD input = 5 s **IMPORTANT**: **No Open Circuit Detection** when wires are simultaneously disconnected from the IN_*x*/RTD C and IN_*x*/RTD D terminals on same channel; where *x* represents the channel number.	
Overvoltage protection, max	±30V DC	
Normal mode noise rejection	75 dB at 60 Hz(1)	
Common mode noise rejection	125 dB @ 60 Hz 1000 Ω differential 120 dB @ 50 Hz 1000 Ω differential 160 dB @ 600V 100 Ω differential	
Channel bandwidth	Notch filter configuration dependent See publication 1756-UM540 for possible values.	
Settling time		
Calibrated accuracy @ 25 °C	0.05%	
Module error over full temperature range	0.1%	
Local CJC sensor accuracy	± 0.3 °C	
Remote CJC sensor, accuracy	± 0.3 °C	
Module input scan time, min	1 ms	
Data format	IEEE 32-bit floating point	
Module conversion method	Sigma-Delta	
Isolation voltage	250V (continuous), reinforced insulation type, inputs to backplane 250V (continuous), basic insulation type, input to input Compliant and tested according to IEC/UL 61010-1	
RTD sensor types/temperature range (Each sensor type in a cell supports all temperature ranges in the corresponding column to the right.)		
100 ΩPT 385 20 Ω PT 385 500 Ω PT 385 1000 Ω PT 385	-200...+870 °C (-328...+1598 °F) 73...1143 °K 132...2058 °R	
100 Ω PT 3916 20 Ω PT 3916 500 Ω PT 3916 1000 Ω PT 3916	-200...+630 °C (-328...+1166 °F) 73...903 °K 132...1626 °R	
10 ΩCU 427	-200...+260 °C (-328...+500 °F) 73...533 °K 132...960 °R	
120 ΩNI 672	-80...+320 °C (-112...+608 °F) 193...593 °K 348...1068 °R	
100 Ω NI 618 120 Ω NI 618 200 Ω NI 618 500 Ω NI 618	-60...+250 °C (-76...+482 °F) 213...523 °K 384...942 °R	
Thermocouple type/temperature range		
Thermocouple Type B	21...1820 °C (68...3308 °F) 293...2093 °K 528...3768 °R	
Thermocouple Type C	0...2320 °C (32...4208 °F) 273...2593 °K 492...4668 °R	
Thermocouple Type D	0...2320 °C (32...4208 °F) 273...2593 °K 492...4668 °R	
Thermocouple Type E	-270...+1000 °C (-454...+1832 °F) 3...1273 °K 6...2292 °R	

Technical Specifications (Continued)

Attribute	1756-IRT8I/A, 1756-IRT8IK/A	1756-IRT8I/B, 1756-IRT8IK/B
Thermocouple Type J	-210...+1200 °C (-346...+2192 °F) 63...1473 °K 114...2652 °R	
Thermocouple Type K	-270...+1372 °C (-454...+2502 °F) 3...1645 °K 6...2961 °R	
Thermocouple Type N	-270...+1300 °C (-454...+2372 °F) 3...1573 °K 6...2832 °R	
Thermocouple Type R	-50...+1768 °C (-58...+3215 °F) 223...2041 °K 402...3674 °R	
Thermocouple Type S	-50...+1768 °C (-58...+3215 °F) 223...2041 °K 402...3674 °R	
Thermocouple Type T	-270...+400 °C (-454...+752 °F) 3...673 °K 6...1212 °R	
Thermocouple Type TXK/XK (L)	-200...+800 °C (-328...+1472 °F) 73...1073 °K 132...1932 °R	
Thermocouple type/resolution, nom		
Type C, R	~0.03 °C (~0.05 °F)	
Type B, S	~0.04 °C (~0.07 °F)	
Type E, J, K, N, T, TXK/XK (L)	~0.01 °C (~0.02 °F)	
Type D	~0.02 °C (~0.04 °F)	
Module keying	Electronic, software configurable	
Removable terminal block	1756-TBCH 1756-TBS6H	
RTB keying	User-defined mechanical	
Slot width	1	
Wire size	1756-TBCH Single wire connection: 0.33...2.1 mm^2 (22...14 AWG) solid or stranded shielded copper wire rated at 105 °C (221 °F), or greater, 1.2 mm (3/64 in.) insulation max. Double wire connection: 0.33...1.3 mm^2 (22...16 AWG) solid or stranded copper wire rated at 105 °C (221 °F), or greater, 1.2 mm (3/64 in.) insulation max. 1756-TBS6H Single wire connection: 0.33...2.1 mm^2 (22...14 AWG) solid or stranded shielded copper wire rated at 105 °C (221 °F), or greater, 1.2 mm (3/64 in.) insulation max.	
Wire category(2)	2 - on signal ports	
Enclosure type	None (open-style)	
Temperature code	T4	

(1) Notch filter dependent.
(2) Use this conductor category information for planning conductor routing as described in the system-level installation manual. See the Industrial Automation Wiring and Grounding Guidelines, publication 1770-4.1.

Environmental Specifications

Attribute	1756-IRT8I/A, 1756-IRT8IK/A	1756-IRT8I/B, 1756-IRT8IK/B
Temperature, operating IEC 60068-2-1 (Test Ae, Operating Cold), IEC 60068-2-2 (Test Be, Operating Dry Heat), IEC 60068-2-14 (Test Nb, Operating Thermal Shock)	0 °C ≤ Ta ≤ +60 °C (+32 °F ≤ Ta ≤ +140 °F)	
Temperature, nonoperating IEC 60068-2-1 (Test Ab, Unpackaged Nonoperating Cold), IEC 60068-2-2 (Test Bb, Unpackaged Nonoperating Dry Heat), IEC 60068-2-14 (Test Na, Unpackaged Nonoperating Thermal Shock)	-40...+85 °C (-40...+185 °F)	
Relative humidity IEC 60068-2-30 (Test dB, Unpackaged Damp Heat)	5...95% noncondensing	
Vibration IEC 60068-2-6 (Test Fc, Operating)	2 g @ 10...500 Hz	
Shock, operating IEC 60068-2-27 (Test Ea, Unpackaged Shock)	30 g	
Shock, nonoperating IEC 60068-2-27 (Test Ea, Unpackaged Shock)	50 g	
Emissions	IEC 61000-6-4	
ESD immunity IEC 61000-4-2	Shielded thermocouple cable recommended 6 kV contact discharges 8 kV air discharges	Shielded thermocouple cable recommended ±8 kV contact discharges ±8 kV air discharges
Radiated RF immunity IEC 61000-4-3	10V/m with 1 kHz sine wave 80% AM from 80...2000 MHz 10V/m with 200 Hz 50% Pulse 100% AM @ 900 MHz 10V/m with 200 Hz 50% Pulse 100% AM @ 1890 MHz 3V/m with 1 kHz sine wave 80% AM from 2000...2700 MHz	20V/m with 1 kHz sine wave 80% AM from 80...1000 MHz 10V/m with 1 kHz sine wave 80% AM from 1000...6000 MHz
EFT/B immunity IEC 61000-4-4	Shielded thermocouple cable recommended ±4 kV at 5 kHz on shielded signal ports	Shielded thermocouple cable recommended ±4 kV at 5 kHz and 100 kHz on shielded signal ports
Surge transient immunity IEC 61000-4-5	±2 kV line-earth (CM) on shielded signal ports	
Conducted RF immunity IEC 61000-4-6	10V rms with 1 kHz sine wave 80% AM from 150 kHz...80 MHz	

Certifications

Certification[1]	1756-IRT8I, 1756-IRT8IK
cULus	UL Listed Industrial Control Equipment, certified for US and Canada. See UL File E65584. UL Listed for Class I, Division 2 Group A,B,C,D Hazardous Locations, certified for U.S. and Canada. See UL File E194810.
CE	European Union 2014/30/EU EMC Directive, compliant with: • EN 61326-1; Meas./Control/Lab., Industrial Requirements • EN 61000-6-2; Industrial Immunity • EN 61000-6-4; Industrial Emissions • EN 61131-2; Programmable Controllers (Clause 8, Zone A & B) European Union 2014/35/EU LVD, compliant with EN 61131-2; Programmable Controllers (Clause 11)
RCM	Australian Radiocommunications Act, compliant with EN 61000-6-4; Industrial Emissions
Ex	European Union 2014/34/EU ATEX Directive, compliant with: • IEN IEC 60079-0 Edition 7; General Requirements • EN IEC 60079-7; Potentially Explosive Atmospheres, Protection "e" • II 3 G Ex ec IIC T4 Gc • UL 22 ATEX 2772X
IECEx	IECEx System, compliant with: • IEC 60079-0 Edition 7; General Requirements • IEC 60079-7; Potentially Explosive Atmospheres, Protection "e" • II 3 G Ex ec IIC T4 Gc • IECEx UL 22.0039X
UKex	In conformity with the following UKex Statutory Instruments and their amendments: • Schedule 1 of the UKEX Regulation 2016 No. 1107 • Equipment protection by increased safety "e", reference certificate number UL22UKEX2499X • Zone 2 classification according to UKEX Regulation 2016 No. 1107
KC	Korean Registration of Broadcasting and Communications Equipment, compliant with Article 58-2 of Radio Waves Act, Clause 3
UKCA	In conformity with the following UK Statutory Instruments and their amendments: • 2016 No. 1091, Electromagnetic Compatibility Regulations • 2016 No. 1101, Electrical Equipment (Safety) Regulations • 2016 No. 1107, Equipment and Protective Systems Intended for Use in Potentially Explosive Atmospheres Regulations • 2012 No. 3032, Restriction of the Use of Certain Hazardous Substances in Electrical and Electronic Equipment
Morocco	In conformity with the following regulations: • Arrêté ministériel n° 6404-15 du 1 er muharram 1437 (15 octobre 2015) Équipements électriques destinés à être utilisés sous certaines limites de tension • Arrêté ministériel n° 6404-15 du 29 ramadan 1436 (16 juillet 2015) Compatibilité électromagnétique des équipements
CCC	CCC 2020122309111998 CNCA-C23-01 强制性产品认证实施规则 防爆电气 CNCA-C23-01 CCC Implementation Rule Explosion-Proof Electrical Products

(1) When product is marked. See the Product Certification link at rok.auto/certifications for Declarations of Conformity, Certificates, and other certification details.

1756-IR12, 1756-IR12K

ControlLogix RTD analog input module

IMPORTANT: Remember the following:
- If separate power sources are used, do not exceed the specific isolation voltage as listed in the specifications.
- For 2-wire resistor applications including calibration, make sure IN_x/B and RTN_x/C are shorted together.

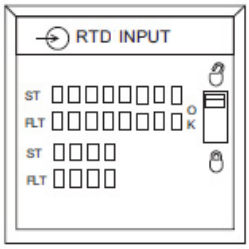

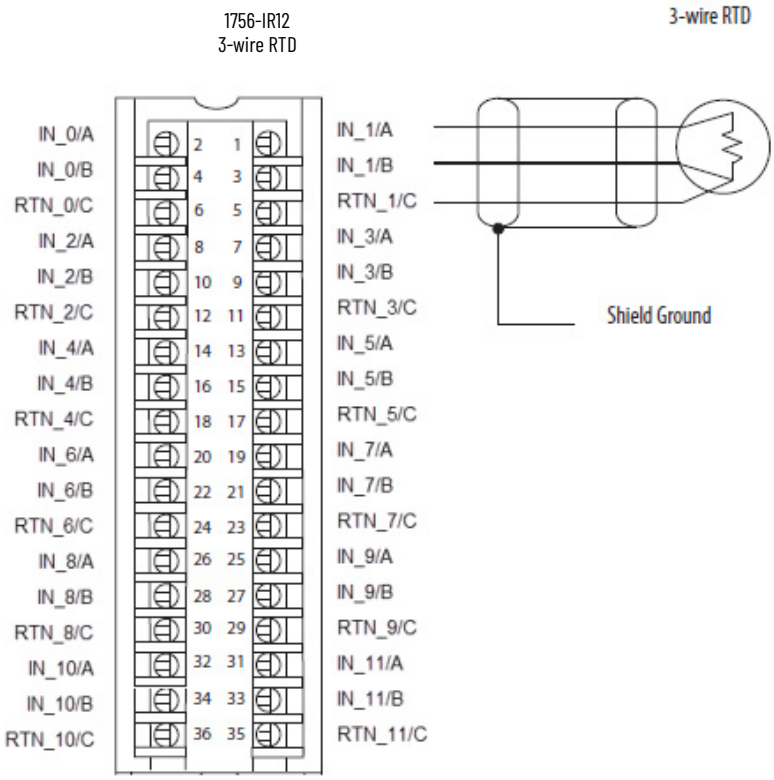

Technical Specifications

Attribute	1756-IR12, 1756-IR12K
Inputs	12 channels RTD mode
Input range	1...500 Ω 2...1000 Ω 4...2000 Ω 8...4000 Ω
Resolution	24 bits 0...510 Ω: 0.06 mΩ/count 0...1020 Ω: 0.12 mΩ/count 0...2040 Ω: 0.25 mΩ/count 0...4080 Ω: 0.50 mΩ/count
RTD sensors supported	100, 200, 500, 1000 Ω Platinum, alpha=385 100, 200, 500, 1000 Ω Platinum, alpha=3916 120 Ω Nickel, alpha=672 100, 120, 200, 500 Ω Nickel, alpha=618 10 Ω Copper, alpha=427
Current draw @ 5.1V	Series B 210 mA Series A 200 mA
Current draw @ 24V	70 mA
Total backplane power	Series B 2.75 W Series A 2.7 W

Technical Specifications (Continued)

Attribute	1756-IR12, 1756-IR12K
Power dissipation, max	Series B 2.75 W Series A 2.7 W
Thermal dissipation	Series B 9.38 BTU/hr Series A 9.2 BTU/hr
RTD excitation current	600 µA
Overvoltage protection, max	±30V DC
Common mode noise rejection	120 dB @ 60 Hz 1000 Ω differential 100 dB @ 50 Hz 1000 Ω differential
Channel bandwidth	Notch filter configuration dependent See publication 1756-UM540 for possible values.
Settling time	Notch filter configuration dependent See publication 1756-UM540 for possible values.
Open circuit detection	Positive full-scale reading within 2 s
Calibrated accuracy @ 25 °C	0...510 Ωrange: 0.1% Other Ω ranges: 0.25%
Module error over full temperature range	0...510 Ω range: 0.2% Other Ω ranges: 0.5%
Module input scan time, min	50 ms
Data format	IEEE 32-bit floating point
Module conversion method	Sigma-Delta
Isolation Voltage	250V (continuous), reinforced insulation type, inputs to backplane No isolation between individual inputs Compliant and tested according to IEC/UL 61010-1
RTD sensor types/temperature range (Each sensor type in a cell supports all temperature ranges in the corresponding column to the right.)	
100 ΩPT 385 20 Ω PT 385 500 Ω PT 385 1000 Ω PT 385	-200...+870 °C (-328...+1598 °F) 73...1143 °K 132...2058 °R
100 Ω PT 3916 20 Ω PT 3916 500 Ω PT 3916 1000 Ω PT 3916	-200...+630 °C (-328...+1166 °F) 73...903 °K 132...1626 °R
10ΩCU 427	-200...+260 °C (-328...+500 °F) 73...533 °K 132...960 °R
120 Ω NI 672	-80...+320 °C (-112...+608 °F) 193...593 °K 348...1068 °R
100 Ω NI 618 120 Ω NI 618 200 Ω NI 618 500 Ω NI 618	-60...+250 °C (-76...+482 °F) 213...523 °K 384...942 °R
Module keying	Electronic, software configurable
Removable terminal block	1756-TBCH 1756-TBS6H
RTB keying	User-defined mechanical
Slot width	1

Technical Specifications (Continued)

Attribute	1756-IR12, 1756-IR12K
Wire size	1756-TBCH Single wire connection: 0.33...2.1 mm^2 (22...14 AWG) solid or stranded shielded copper wire rated at 105 °C (221 °F), or greater, 1.2 mm (3/64 in.) insulation max. Double wire connection: 0.33...1.3 mm^2 (22...16 AWG) solid or stranded copper wire rated at 105 °C (221 °F), or greater, 1.2 mm (3/64 in.) insulation max. 1756-TBS6H Single wire connection: 0.33...2.1 mm^2 (22...14 AWG) solid or stranded shielded copper wire rated at 105 °C (221 °F), or greater, 1.2 mm (3/64 in.) insulation max.
Wire category	2 on signal ports(1)
Enclosure type	None (open-style)
Temperature Code	T4

(1) Use this conductor category information for planning conductor routing as described in the system-level installation manual. See the Industrial Automation Wiring and Grounding Guidelines, publication 1770-4.1.

Environmental Specifications

Attribute	1756-IR12, 1756-IR12K
Temperature, operating IEC 60068-2-1 (Test Ae, Operating Cold), IEC 60068-2-2 (Test Be, Operating Dry Heat), IEC 60068-2-14 (Test Nb, Operating Thermal Shock)	0 °C ≤ Ta ≤ +60 °C (+32 °F ≤ Ta ≤ +140 °F)
Temperature, nonoperating IEC 60068-2-1 (Test Ab, Unpackaged Nonoperating Cold), IEC 60068-2-2 (Test Bb, Unpackaged Nonoperating Dry Heat), IEC 60068-2-14 (Test Na, Unpackaged Nonoperating Thermal Shock)	-40...+85 °C (-40...+185 °F)
Relative humidity IEC 60068-2-30 (Test dB, Unpackaged Damp Heat)	5...95% noncondensing
Vibration	2 g @ 10...500 Hz
Shock, operating IEC 60068-2-27 (Test Ea, Unpackaged Shock)	30 g
Shock, nonoperating IEC 60068-2-27 (Test Ea, Unpackaged Shock)	50 g
Emissions IEC 61000-6-4	IEC 61000-6-4
ESD Immunity IEC 61000-4-2	Series B ±8 kV contact discharges ±8 kV air discharges Series A 6 kV contact discharges 8 kV air discharges
Radiated RF Immunity IEC 61000-4-3	Series B 10V/m with 1 kHz sine wave 80% AM from 80...1000 MHz 10V/m with 1 kHz sine wave 80% AM from 1000...6000 MHz Series A 10V/m with 1 kHz sine wave 80% AM from 80...2000 MHz 10V/m with 200 Hz 50% Pulse 100% AM at 900 MHz 10V/m with 200 Hz 50% Pulse 100% AM at 1890 MHz 3V/m with 1 kHz sine wave 80% AM from 2000...2700 MHz
EFT/B Immunity IEC 61000-4-4	Series B ±4 kV at 5 kHz and 100 kHz on shielded signal ports Series A ±2 kV at 5/100kHz on shielded ports
Surge Transient Immunity IEC 61000-4-5	±2 kV line-earth (CM) on shielded ports
Conducted RF Immunity IEC 61000-4-6	10V rms with 1 kHz sine wave 80% AM from 150 kHz...80 MHz

Certifications

Certification[1]	1756-IR12, 1756-IR12K
cULus	UL Listed Industrial Control Equipment, certified for US and Canada. See UL File E65584. UL Listed for Class I, Division 2 Group A,B,C,D Hazardous Locations, certified for U.S. and Canada. See UL File E194810.
CE	European Union 2004/108/EC EMC Directive, compliant with: • EN 61326-1; Meas./Control/Lab., Industrial Requirements • EN 61000-6-2; Industrial Immunity • EN 61000-6-4; Industrial Emissions • EN 61131-2; Programmable Controllers (Clause 8, Zone A & B) European Union 2014/35/EU LVD, compliant with EN 61010-2-201; Control Equipment Safety Requirements
RCM	Australian Radiocommunications Act, compliant with EN 61000-6-4; Industrial Emissions
Ex	European Union 2014/34/EU ATEX Directive, compliant with: • EN IEC 60079-0 Edition 7; General Requirements • EN IEC 60079-7; Potentially Explosive Atmospheres, Protection "e" • II 3 G Ex ec IIC T4 Gc • UL 22 ATEX 2772X
IECEx	IECEx System, compliant with: • IEC 60079-0 Edition 7; General Requirements • IEC 60079-7; Potentially Explosive Atmospheres, Protection "e" • II 3 G Ex ec IIC T4 Gc • IECEx UL 22.0039X
UKex	In conformity with the following UKex Statutory Instruments and their amendments: • Schedule 1 of the UKEX Regulation 2016 No. 1107 • Equipment protection by increased safety "e", reference certificate number UL22UKEX2499X • Zone 2 classification according to UKEX Regulation 2016 No. 1107
KC	Korean Registration of Broadcasting and Communications Equipment, compliant with Article 58-2 of Radio Waves Act, Clause 3
UKCA	In conformity with the following UK Statutory Instruments and their amendments: • 2016 No. 1091, Electromagnetic Compatibility Regulations • 2016 No. 1101, Electrical Equipment (Safety) Regulations • 2016 No. 1107, Equipment and Protective Systems Intended for Use in Potentially Explosive Atmospheres Regulations • 2012 No. 3032, Restriction of the Use of Certain Hazardous Substances in Electrical and Electronic Equipment
Morocco	In conformity with the following regulations: • Arrêté ministériel n° 6404-15 du 1 er muharram 1437 (15 octobre 2015) Équipements électriques destinés à être utilisés sous certaines limites de tension • Arrêté ministériel n° 6404-15 du 29 ramadan 1436 (16 juillet 2015) Compatibilité électromagnétique des équipements
CCC	CCC 2020122309111998 CNCA-C23-01 强制性产品认证实施规则 防爆电气 CNCA-C23-01 CCC Implementation Rule Explosion-Proof Electrical Products

(1) When product is marked. See the Product Certification link at rok.auto/certifications for Declarations of Conformity, Certificates, and other certification details.

1756-IT16, 1756-IT16K

ControlLogix thermocouple analog input module.

IMPORTANT: Remember the following:

- Connect the white end of the CJC sensor to the even-numbered terminal. Connect the orange end of the CJC sensor to the odd-numbered terminals.

  For CJC 0:
  - White end - Connected to terminal number 2
  - Orange end - Connected to terminal number 1

  For CJC 1:
  - White end - Connected to terminal number 36
  - Orange end - Connected to terminal number 35

- CJC sensors do not come with the module. You must order the sensors, product catalog number 1756-CJC, separately.
- If separate power sources are used, do not exceed the specific isolation voltage as listed in the specifications.
- CJC sensors are only required when channel wiring is connected via an RTB.
- CJC sensors are not needed when using IFM as it has built-in CJC sensor.
- You cannot use CJC and connect a CJC sensor to only one channel.

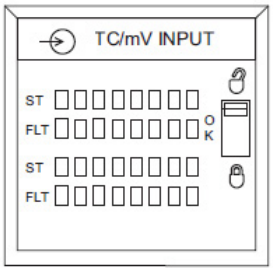

1756-IT16

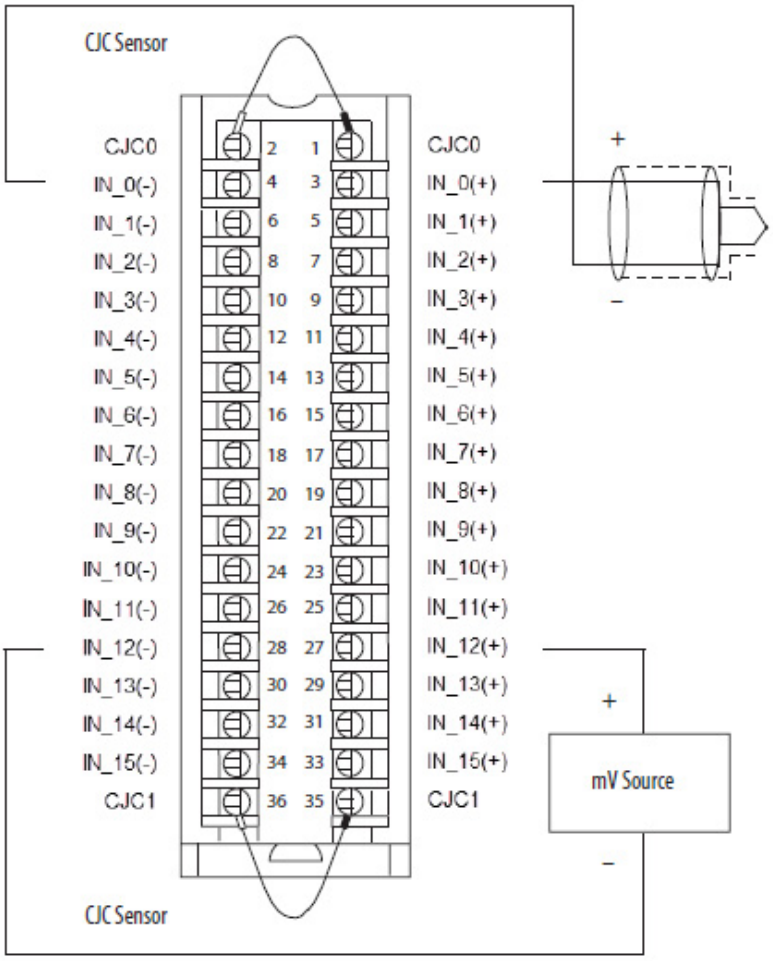

Technical Specifications

Attribute	1756-IT16, 1756-IT16K
Inputs	16 channels, thermocouple mode Two CJC sensors for Thermocouple use. The CJC sensors, product catalog number 1756-CJC, do not come with the module. You must order the sensors separately.
Input range	-100...+100 mV Max 5VA
Resolution	24 bits -101...+101 mV: 0.01 µV/count
Thermocouple types	B, C, D, E, J, K, N, R, S, T, TXK/XK (L)
Thermocouple linearization	ITS-90
Current draw @ 5.1V	Series B 210 mA Series A 200 mA
Current draw @ 24V	80 mA
Total backplane power	3 W
Power dissipation, max	3 W
Thermal dissipation	Series B 10.20 BTU/hr Series A 9.9 BTU/hr
Input impedance, approx	1 GΩ
Overvoltage protection, max	±30V DC
Normal mode noise rejection	75 dB at 60 Hz[1]
Common mode noise rejection	120 dB @ 60 Hz 1000 Ω differential 100 dB @ 50 Hz 1000 Ω differential
Channel bandwidth	Notch filter configuration dependent See publication 1756-UM540 for possible values.
Settling time	Notch filter configuration dependent See publication 1756-UM540 for possible values.
Open circuit detection	Positive full-scale reading within 2 s
Calibrated accuracy @ 25 °C	0.1%
Module error over full temperature range	0.2%
Local CJC sensor accuracy	± 0.3 °C
Remote CJC sensor, accuracy	± 0.3 °C
Module input scan time, min	50 ms
Data format	IEEE 32-bit floating point
Module conversion method	Sigma-Delta
Isolation voltage	250V (continuous), reinforced insulation type, inputs to backplane No isolation between individual inputs Compliant and tested according to IEC/UL 61010-1
Thermocouple type/temperature range	
Thermocouple Type B	21...1820 °C (68...3308 °F) 293...2093 °K 528...3768 °R
Thermocouple Type C	0...2320 °C (32...4208 °F) 273...2593 °K 492...4668 °R
Thermocouple Type D	0...2320 °C (32...4208 °F) 273...2593 °K 492...4668 °R
Thermocouple Type E	-270...+1000 °C (-454...+1832 °F) 3...1273 °K 6...2292 °R
Thermocouple Type J	-210...+1200 °C (-346...+2192 °F) 63...1473 °K 114...2652 °R

Technical Specifications (Continued)

Attribute	1756-IT16, 1756-IT16K
Thermocouple Type K	-270...+1372 °C (-454...+2502 °F) 3...1645 °K 6...2961 °R
Thermocouple Type N	-270...+1300 °C (-454...+2372 °F) 3...1573 °K 6...2832 °R
Thermocouple Type R	-50...+1768 °C (-58...+3215 °F) 223...2041 °K 402...3674 °R
Thermocouple Type S	-50...+1768 °C (-58...+3215 °F) 223...2041 °K 402...3674 °R
Thermocouple Type T	-270...+400 °C (-454...+752 °F) 3...673 °K 6...1212 °R
Thermocouple Type TXK/XK (L)	-200...+800 °C (-328...+1472 °F) 73...1073 °K 132...1932 °R
Thermocouple type/resolution, nom	
Type C, R	~0.03 °C (~0.05 °F)
Type B, S	~0.04 °C (~0.07 °F)
Type E, J, K, N, T, TXK/XK (L)	~0.01 °C (~0.02 °F)
Type D	~0.02 °C (~0.04 °F)
Module keying	Electronic, software configurable
Removable terminal block	1756-TBCH 1756-TBS6H
RTB keying	User-defined mechanical
Slot width	1
Wire size	1756-TBCH Single wire connection: 0.33...2.1 mm^2 (22...14 AWG) solid or stranded shielded copper wire rated at 105 °C (221 °F), or greater, 1.2 mm (3/64 in.) insulation max. Do not wire more than one conductor on any single terminal. Double wire connection: 0.33...1.3 mm^2 (22...16 AWG) solid or stranded copper wire rated at 105 °C (221 °F), or greater, 1.2 mm (3/64 in.) insulation max. Do not wire more than two conductors on any single terminal. 1756-TBS6H Single wire connection: 0.33...2.1 mm^2 (22...14 AWG) solid or stranded shielded copper wire rated at 105 °C (221 °F), or greater, 1.2 mm (3/64 in.) insulation max. Do not wire more than one conductor on any single terminal.
Wire category	2 on shielded signal ports(2)
Enclosure type	None (open-style)
Enclosure type rating	None (open-style)
Temperature Code	T4

(1) Notch filter dependent.
(2) Use this conductor category information for planning conductor routing as described in the system-level installation manual. See the Industrial Automation Wiring and Grounding Guidelines, publication 1770-4.1.

Environmental Specifications

Attribute	1756-IT16, 1756-IT16K
Temperature, operating IEC 60068-2-1 (Test Ae, Operating Cold), IEC 60068-2-2 (Test Be, Operating Dry Heat), IEC 60068-2-14 (Test Nb, Operating Thermal Shock)	0 °C ≤ Ta ≤ +60 °C (+32 °F ≤ Ta ≤ +140 °F)
Temperature, nonoperating IEC 60068-2-1 (Test Ab, Unpackaged Nonoperating Cold), IEC 60068-2-2 (Test Bb, Unpackaged Nonoperating Dry Heat), IEC 60068-2-14 (Test Na, Unpackaged Nonoperating Thermal Shock)	-40...+85 °C (-40...+185 °F)
Relative humidity IEC 60068-2-30 (Test dB, Unpackaged Damp Heat)	5...95% noncondensing
Vibration IEC 60068-2-6 (Test Fc, Operating)	2 g @ 10...500 Hz
Shock, operating IEC 60068-2-27 (Test Ea, Unpackaged Shock)	30 g
Shock, nonoperating IEC 60068-2-27 (Test Ea, Unpackaged Shock)	50 g
Emissions IEC 61000-6-4	IEC 61000-6-4
ESD Immunity IEC 61000-4-2	Series B +/-8 kV contact discharges +/-8 kV air discharges Series A 6 kV contact discharges 8 kV air discharges
Radiated RF Immunity IEC 61000-4-3	Series B 10V/m with 1 kHz sine wave 80% AM from 80...1000 MHz 10V/m with 1 kHz sine wave 80% AM from 1000...6000 MHz Series A 10V/m with 1 kHz sine wave 80% AM from 80...2000 MHz 10V/m with 200 Hz 50% Pulse 100% AM at 900 MHz 10V/m with 200 Hz 50% Pulse 100% AM at 1890 MHz 3V/m with 1 kHz sine wave 80% AM from 2000...2700 MHz
EFT/B Immunity IEC 61000-4-4	Series B ±4 kV at 5 kHz and 100 kHz on shielded signal ports Series A ±2 kV at 5/100kHz on shielded ports
Surge Transient Immunity IEC 61000-4-5	±2 kV line-earth (CM) on shielded signal ports
Conducted RF Immunity IEC 61000-4-6	10V rms with 1 kHz sine wave 80% AM from 150 kHz...80 MHz

Certifications

Certification [1]	1756-IT16, 1756-IT16K
cULus	UL Listed Industrial Control Equipment, certified for US and Canada. See UL File E65584. UL Listed for Class I, Division 2 Group A,B,C,D Hazardous Locations, certified for U.S. and Canada. See UL File E194810.
CE	European Union 2004/108/EC EMC Directive, compliant with: • EN 61326-1; Meas./Control/Lab., Industrial Requirements • EN 61000-6-2; Industrial Immunity • EN 61000-6-4; Industrial Emissions • EN 61131-2; Programmable Controllers (Clause 8, Zone A & B) European Union 2014/35/EU LVD, compliant with EN 61010-2-201; Control Equipment Safety Requirements
RCM	Australian Radiocommunications Act, compliant with EN 61000-6-4; Industrial Emissions
Ex	European Union 2014/34/EU ATEX Directive, compliant with: • EN IEC 60079-0 Edition 7; General Requirements • EN IEC 60079-7; Potentially Explosive Atmospheres, Protection "e" • II 3 G Ex ec IIC T4 Gc • UL 22 ATEX 2772X
IECEx	IECEx System, compliant with: • IEC 60079-0 Edition 7; General Requirements • IEC 60079-7; Potentially Explosive Atmospheres, Protection "e" • II 3 G Ex ec IIC T4 Gc • IECEx UL 22.0039X
UKex	In conformity with the following UKex Statutory Instruments and their amendments: • Schedule 1 of the UKEX Regulation 2016 No. 1107 • Equipment protection by increased safety "e", reference certificate number UL22UKEX2499X • Zone 2 classification according to UKEX Regulation 2016 No. 1107
KC	Korean Registration of Broadcasting and Communications Equipment, compliant with Article 58-2 of Radio Waves Act, Clause 3
UKCA	In conformity with the following UK Statutory Instruments and their amendments: • 2016 No. 1091, Electromagnetic Compatibility Regulations • 2016 No. 1101, Electrical Equipment (Safety) Regulations • 2016 No. 1107, Equipment and Protective Systems Intended for Use in Potentially Explosive Atmospheres Regulations • 2012 No. 3032, Restriction of the Use of Certain Hazardous Substances in Electrical and Electronic Equipment
Morocco	In conformity with the following regulations: • Arrêté ministériel n° 6404-15 du 1 er muharram 1437 (15 octobre 2015) Équipements électriques destinés à être utilisés sous certaines limites de tension • Arrêté ministériel n° 6404-15 du 29 ramadan 1436 (16 juillet 2015) Compatibilité électromagnétique des équipements
CCC	CCC 2020122309111998 CNCA-C23-01 强制性产品认证实施规则 防爆电气 CNCA-C23-01 CCC Implementation Rule Explosion-Proof Electrical Products

(1) See the Product Certification link at rok.auto/certifications for Declarations of Conformity, Certificates, and other certification details.

1756-OF4, 1756-OF4K

ControlLogix voltage/current output analog module

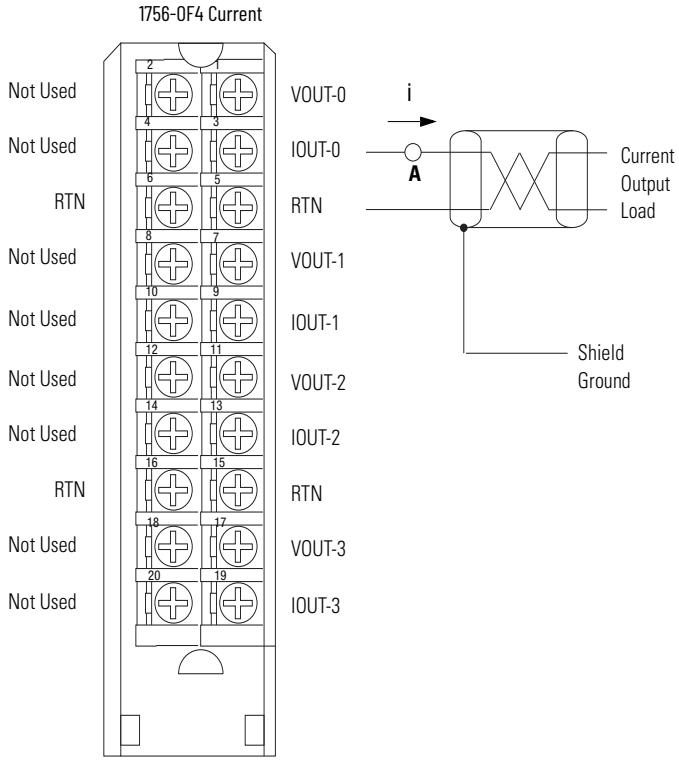

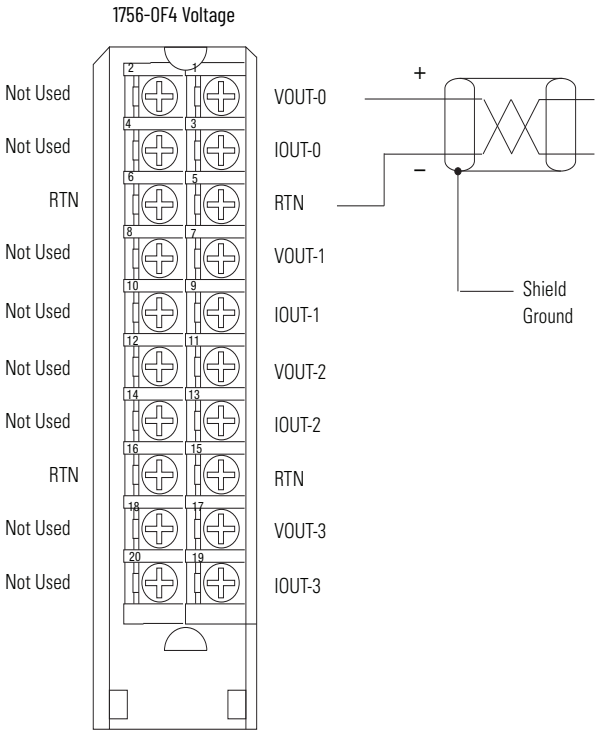

- Place additional loop devices (such as strip chart recorders) at the A location noted in the drawing.
- All terminals marked RTN are connected internally.

All terminals marked RTN are connected internally.

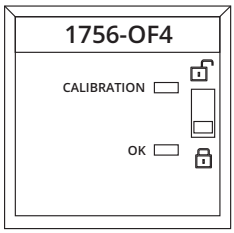

Signal and User Counts

Range	Low Signal and User Counts	High Signal and User Counts
0...20 mA	0 mA -32,768 counts	21.2916 mA 32,767 counts
±10V	-10.4336V -32,768 counts	10.4336V 32,767 counts

Technical Specifications

Attribute	1756-OF4, 1756-OF4K
Outputs	Four voltage or current outputs
Output range	±10V 0...20 mA
Resolution	Voltage: 15 bits across 10.5V, 320 µV/bit Current: 16 bits across 21 mA, 325 nA/bit
Voltage and current ratings	Backplane: 5.1V DC, 200 mA max; 24V DC, 155 mA max Output voltage: -10...+10V Output current: 0...20 mA

Technical Specifications (Continued)

Attribute	1756-OF4, 1756-OF4K
Current draw @ 5.1V	200 mA max
Current draw @ 24V	155 mA max
Total backplane power	4.74 W max
Power dissipation, max	4.74...1.74 W; 0...750 ohm load
Thermal dissipation	16.17 BTU/hr
Open circuit detection	Current output only (Output must be set to >0.1 mA)
Overvoltage protection	±24V DC
Short circuit protection	Electronically current limited to 21 mA or less
Drive capability	Voltage: >2000 Ω Current: 0...750 Ω
Settling time	<2 ms to 95% of final value with resistive loads
Calibrated accuracy	Better than 0.05% of range from 0...21 mA, -10.4...10.4V
Offset drift	20 µV/ °C 80 nA/°C
Gain drift with temperature, max	Voltage: 6 ppm/°C, 125 µV/°C Current: 30 ppm/°C, 630 µA/°C
Module error	Voltage: 0.1% of range Current: 0.2% of range
Module scan time	12 ms floating point 8 ms integer
Data format	Integer mode (left justified, 2 s complement) IEEE 32-bit floating point
Module conversion method	R-Ladder DAC, monotonicity with no missing codes
Isolation voltage	250V (continuous), Basic(1) insulation type, output channels to backplane No isolation between individual output channels
Module keying	Electronic, software configurable
Removable terminal block	1756-TBNH 1756-TBSH
RTB keying	User-defined mechanical
Slot width	1
Wire size	1756-TBNH
	Single wire connection: 0.33...2.1 mm^2 (22...14 AWG) solid or stranded copper wire, rated at 105 °C (221 °F) or greater, 1.2 mm (3/64 in.) insulation max. Do not wire more than one conductor on any terminal. Double wire connection: 0.33...1.3 mm^2 (22...16 AWG) solid or stranded copper wire, rated at 105 °C (221 °F) or greater, 1.2 mm (3/64 in.) insulation max. Do not wire more than two conductors on any terminal.
	1756-TBSH
	Single wire connection: 0.33...2.1 mm^2 (22...14 AWG) solid or stranded shielded copper wire, rated at 105 °C (221 °F) or greater, 1.2 mm (3/64 in.) insulation max. Do not wire more than one conductor on any terminal.
Terminal block torque specs	1756-TBNH: 1.36 N•m (12 lb•in)
Wiring category(2)	1 - on signal ports
Enclosure type	None (open-style)
Temperature code	T4

(1) Series A modules were specified to Reinforced Insulation based on UL508 terminology. Series B and series C modules are type tested to the same Dielectric strength voltage as series A modules but use updated terminology based on IEC 61010-1, Basic Insulation.
(2) Use this conductor category information for planning conductor routing. See the Industrial Automation Wiring and Grounding Guidelines, publication 1770-4.1.

Environmental Specifications

Attribute	1756-OF4, 1756-OF4K
Temperature, operating IEC 60068-2-1 (Test Ae, Operating Cold), IEC 60068-2-2 (Test Be, Operating Dry Heat), IEC 60068-2-14 (Test Nb, Operating Variation of Temperature)	Chassis Series C 0 °C ≤ Ta ≤ +60 °C (+32 °F ≤ Ta ≤ +140 °F) Chassis Series B 0 °C ≤ Ta ≤ +55 °C (+32 °F ≤ Ta ≤ +131 °F)
Temperature, nonoperating IEC 60068-2-1 (Test Ab, Unpackaged Nonoperating Cold), IEC 60068-2-2 (Test Bb, Unpackaged Nonoperating Dry Heat), IEC 60068-2-14 (Test Na, Unpackaged Nonoperating Thermal Shock)	-40...+85 °C (-40...+185 °F)
Relative humidity IEC 60068-2-30 (Test Db, Unpackaged Damp Heat)	5...95% noncondensing
Conformal Coated(1)	Yes
Corrosive Atmosphere(1) ASTM B845-97 Method H Accelerated Test (20-Day Exposure)	Severity Level G3(2) per ANSI/ISA 71.04-2013, Airborne Contaminants—Gases Severity Level CX(2)(3) per IEC 60721-3-3:2019, Chemically Active Substances
Shock, nonoperating IEC 60068-2-27 (Test Ea, Unpackaged Shock)	30 g
Emissions	IEC 61000-6-4
ESD immunity IEC 61000-4-2	6 kV contact discharges 8 kV air discharges
Radiated RF immunity IEC 61000-4-3	10V/m with 1 kHz sine wave 80% AM from 80...6000 MHz 10V/m with 200 Hz 50% Pulse 100% AM @ 900 MHz 10V/m with 200 Hz 50% Pulse 100% AM @ 1890 MHz
EFT/B immunity IEC 61000-4-4	±4 kV at 5/100 kHz on signal ports
Surge transient immunity IEC 61000-4-5	±1 kV line-line (DM) and ±2 kV line-earth (CM) on signal ports
Conducted RF immunity IEC 61000-4-6	10V rms with 1 kHz sine wave 80% AM from 150 kHz...100 MHz

(1) Only applicable to modules that end with a 'K or 'XT'.
(2) The module and the corresponding RTB must remain installed at all times and the RTB door must remain closed, for the product to maintain its corrosive atmosphere rating.
(3) Up to 9.6 microns per year, corrosion rate of copper.

Certifications

Certification(1)	1756-OF4, 1756-OF04K
cULus	UL Listed Industrial Control Equipment, certified for US and Canada. See UL File E65584. UL Listed for Class I, Division 2 Group A,B,C,D Hazardous Locations, certified for U.S. and Canada. See UL File E194810.
FM	FM Approved Equipment for use in Class I Division 2 Group A, B, C, D Hazardous Locations
CE	European Union 2014/30/EU EMC Directive, compliant with: • EN 61326-1; Meas./Control/Lab., Industrial Requirements • EN 61000-6-2; Industrial Immunity • EN 61000-6-4; Industrial Emissions • EN 61131-2; Programmable Controllers (Clause 8, Zone A & B) European Union 2014/35/EU LVD, compliant with EN 61131-2; Programmable Controllers (Clause 11)
RCM	Australian Radiocommunications Act, compliant with EN 61000-6-4; Industrial Emissions
Ex	European Union 2014/34/EU ATEX Directive, compliant with: • EN IEC 60079-0; General Requirements • EN IEC 60079-7; Potentially Explosive Atmospheres, Protection "e" • II 3 G Ex ec IIC T4 Gc • UL 22 ATEX 2772X
IECEx	IECEx System, compliant with: • IEC 60079-0; General Requirements • IEC 60079-7; Potentially Explosive Atmospheres, Protection "e" • II 3 G Ex ec IIC T4 Gc • IECEx UL 22.0039X
KC	Korean Registration of Broadcasting and Communications Equipment, compliant with Article 58-2 of Radio Waves Act, Clause 3
UKex	In conformity with the following UKex Statutory Instruments and their amendments: • Schedule 1 of the UKEX Regulation 2016 No. 1107 • Equipment protection by increased safety "e", reference certificate number UL22UKEX2499X • Zone 2 classification according to UKEX Regulation 2016 No. 1107

Certifications (Continued)

Certification[1]	1756-OF4, 1756-OF04K
UKCA	In conformity with the following UK Statutory Instruments and their amendments: • 2016 No. 1091, Electromagnetic Compatibility Regulations • 2016 No. 1101, Electrical Equipment (Safety) Regulations • 2016 No. 1107, Equipment and Protective Systems Intended for Use in Potentially Explosive Atmospheres Regulations • 2012 No. 3032, Restriction of the Use of Certain Hazardous Substances in Electrical and Electronic Equipment
Morocco	In conformity with the following regulations: • Arrêté ministériel n° 6404-15 du 1 er muharram 1437 (15 octobre 2015) Équipements électriques destinés à être utilisés sous certaines limites de tension • Arrêté ministériel n° 6404-15 du 29 ramadan 1436 (16 juillet 2015) Compatibilité électromagnétique des équipements
CCC	CCC 2020122309111998 CNCA-C23-01 强制性产品认证实施规则 防爆电气 CNCA-C23-01 CCC Implementation Rule Explosion-Proof Electrical Products

(1) When product is marked. See the Product Certification link at rok.auto/certifications for Declarations of Conformity, Certificates, and other certification details.

1756-OF8, 1756-OF8K

ControlLogix voltage/current output analog module

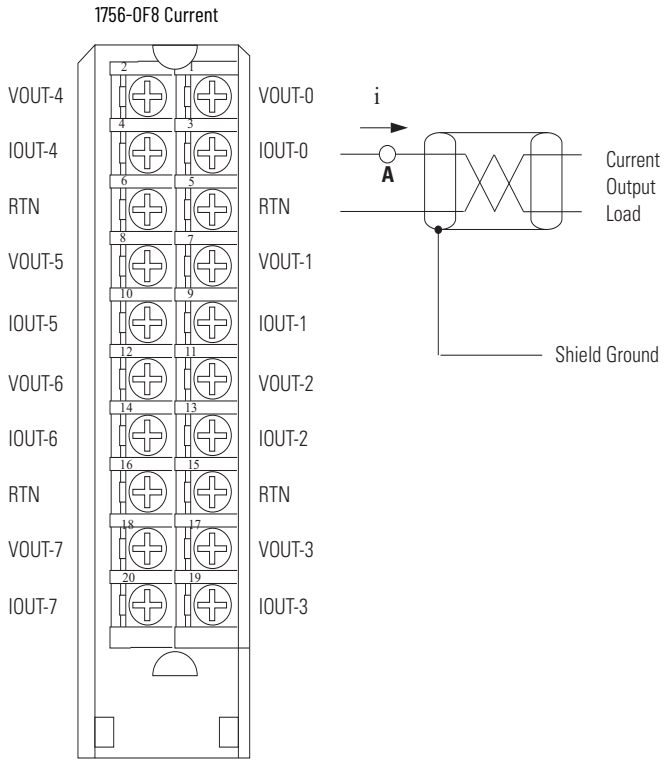

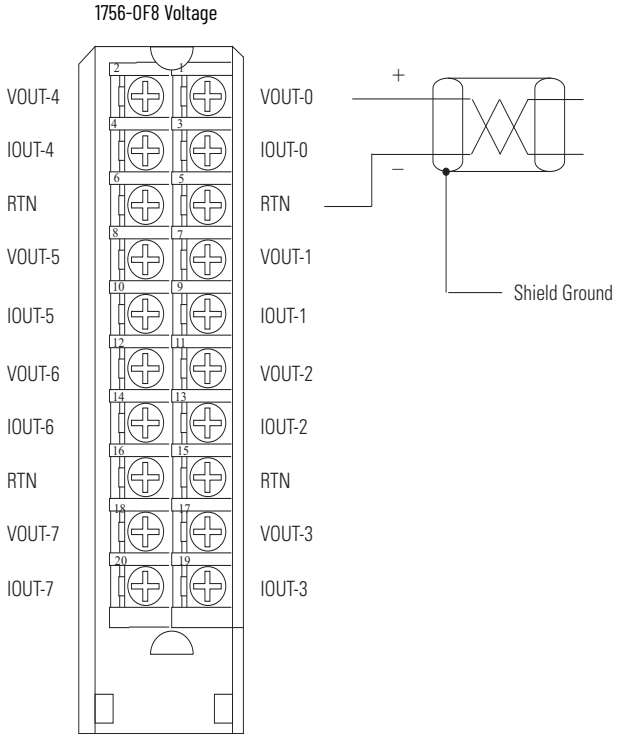

- Place additional loop devices (such as strip chart recorders) at the A location noted in the drawing.
- All terminals marked RTN are connected internally.

All terminals marked RTN are connected internally.

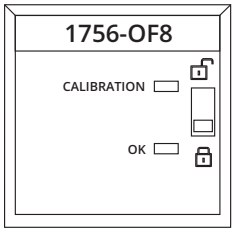

Signal and User Counts

Range	Low Signal and User Counts	High Signal and User Counts
0...20 mA	0 mA -32,768 counts	21.2916 mA 32,767 counts
±10V	-10.4336V -32,768 counts	10.4336V 32,767 counts

Technical Specifications

Attribute	1756-OF8, 1756-OF8K
Outputs	Eight voltages or current
Output range	± 10V 0...20 mA
Resolution	Voltage: 15 bits across 10.5V - 320 µV/bit Current: 16 bits across 21 mA - 325 nA/bit
Current draw @ 5.1V	200 mA
Current draw @ 24V	300 mA

Technical Specifications (Continued)

Attribute	1756-OF8, 1756-OF8K	
Total backplane power	8.22 W	
Voltage and current ratings	Backplane: 5.1V DC, 200 mA max; 24V DC, 300 mA max Output Voltage: -10...+10V Output Current: 0...20mA	
Power dissipation	8.22...2 W; 0...750 ohm loads	
Thermal dissipation	28.03 BTU/hr	
Open circuit detection	Current output only (Output must be set to >0.1 mA)	
Overvoltage protection	± 24V DC	
Short circuit protection	Electronically current limited to 21 mA or less	
Drive capability	Voltage: > 2000 Ω Current: 0...750 Ω	
Settling time	< 2 ms to 95% of final value with resistive loads	
Calibrated accuracy @ 25 °C (77 °F)	Better than 0.05% of range from 0...21 mA, -10.4...10.4V	
Offset drift	20 µV/ °C 80 nA/°C	
Gain drift with temperature, max	Voltage: 6 ppm/°C, 125 µV/°C Current: 30 ppm/°C, 630 µA/°C	
Module error	Voltage: 0.1% of range Current: 0.2% of range	
Module scan time, min	12 ms floating point 8 ms integer	
Data format	Integer mode (left justified, 2 s complement) IEEE 32-bit floating point	
Module conversion method	R-Ladder DAC, monotonicity with no missing codes	
Isolation voltage	250V (continuous), Basic[1] insulation type, Output Channels to Backplane No isolation between individual output channels	250V (continuous), Basic Insulation Type, Output Channels to Backplane No isolation between individual output channels
Module keying	Electronic, software configurable	
Removable terminal block	1756-TBNH 1756-TBSH	
RTB keying	User-defined mechanical	
Slot width	1	
Wire size	1756-TBNH	
	Single wire connection: 0.33...2.1 mm^2 (22...14 AWG) solid or stranded copper wire, rated at 105 °C (221 °F) or greater, 1.2 mm (3/64 in.) insulation max. Do not wire more than one conductor on any terminal. Double wire connection: 0.33...1.3 mm^2 (22...16 AWG) solid or stranded copper wire, rated at 105 °C (221 °F) or greater, 1.2 mm (3/64 in.) insulation max. Do not wire more than two conductors on any terminal	
	1756-TBSH	
	Single wire connection, 0.33...2.1 mm^2 (22...14 AWG) solid, or stranded shielded copper wire rated at 105 °C (221 °F), or greater, 1.2 mm (3/64 in.) insulation max. Do not wire multiple conductors on any terminal	
Terminal block torque specs	1756-TBNH: 1.36 N•m (12 lb•in)	
Wiring category[2]	1 - on signal ports	
Enclosure type	None (open-style)	
Temperature code	T4	

(1) Series A modules were specified to Reinforced Insulation based on UL508 terminology. Series B and series C modules are type tested to the same Dielectric strength voltage as series A modules but use updated terminology based on IEC 61010-1, Basic Insulation.
(2) Use this Conductor Category information for planning conductor routing. See the Industrial Automation Wiring and Grounding Guidelines, publication 1770-4.1.

Environmental Specifications

Attribute	1756-OF8, 1756-OF8K
Temperature, operating IEC 60068-2-1 (Test Ae, Operating Cold), IEC 60068-2-2 (Test Be, Operating Dry Heat), IEC 60068-2-14 (Test Nb, Operating Thermal Shock)	Chassis Series C 0 °C ≤ Ta ≤ +60 °C (+32 °F ≤ Ta ≤ +140 °F) Chassis Series B 0 °C ≤ Ta ≤ +55 °C (+32 °F ≤ Ta ≤ +131 °F)
Temperature, nonoperating IEC 60068-2-1 (Test Ab, Unpackaged Nonoperating Cold), IEC 60068-2-2 (Test Bb, Unpackaged Nonoperating Dry Heat), IEC 60068-2-14 (Test Na, Unpackaged Nonoperating Thermal Shock)	-40...+85 °C (-40...+185 °F)
Relative humidity IEC 60068-2-30 (Test Db, Unpackaged Damp Heat)	5...95% noncondensing
Conformal Coated(1)	Yes
Corrosive Atmosphere(1) ASTM B845-97 Method H Accelerated Test (20-Day Exposure)	Severity Level G3(2) per ANSI/ISA 71.04-2013, Airborne Contaminants—Gases Severity Level CX(2)(3) per IEC 60721-3-3:2019, Chemically Active Substances
Vibration IEC 60068-2-6 (Test Fc, Operating)	2 g @ 10...500 Hz
Shock, operating IEC 60068-2-27 (Test Ea, Unpackaged Shock)	30 g
Shock, nonoperating IEC 60068-2-27 (Test Ea, Unpackaged Shock)	30 g
Emissions	IEC 61000-6-4
ESD immunity IEC 61000-4-2	6 kV contact discharges 8 kV air discharges
Radiated RF immunity IEC 61000-4-3	10V/m with 1 kHz sine wave 80% AM from 80...6000 MHz 10V/m with 200 Hz 50% Pulse 100% AM @ 900 MHz 10V/m with 200 Hz 50% Pulse 100% AM @ 1890 MHz
EFT/B immunity IEC 61000-4-4	±4 kV at 5/100 kHz on signal ports
Surge transient immunity IEC 61000-4-5	±1 kV line-line (DM) and ±2 kV line-earth (CM) on signal ports
Conducted RF immunity IEC 61000-4-6	10V rms with 1 kHz sine wave 80% AM from 150 kHz...100 MHz

(1) Only applicable to modules that end with a 'K or 'XT'.
(2) The module and the corresponding RTB must remain installed at all times and the RTB door must remain closed, for the product to maintain its corrosive atmosphere rating.
(3) Up to 9.6 microns per year, corrosion rate of copper.

Certifications

Certification[1]	1756-OF8, 1756-OF8K
cULus	UL Listed Industrial Control Equipment, certified for US and Canada. See UL File E65584. UL Listed for Class I, Division 2 Group A,B,C,D Hazardous Locations, certified for U.S. and Canada. See UL File E194810.
FM	FM Approved Equipment for use in Class I Division 2 Group A, B, C, D Hazardous Locations
CE	European Union 2014/30/EU EMC Directive, compliant with: • EN 61326-1; Meas./Control/Lab., Industrial Requirements • EN 61000-6-2; Industrial Immunity • EN 61000-6-4; Industrial Emissions • EN 61131-2; Programmable Controllers (Clause 8, Zone A & B) European Union 2014/35/EU LVD, compliant with EN 61131-2; Programmable Controllers (Clause 11)
RCM	Australian Radiocommunications Act, compliant with EN 61000-6-4; Industrial Emissions
Ex	European Union 2014/34/EU ATEX Directive, compliant with: • EN IEC 60079-0; General Requirements • EN IEC 60079-7; Potentially Explosive Atmospheres, Protection "e" • II 3 G Ex ec IIC T4 Gc • UL 22 ATEX 2772X
IECEx	IECEx System, compliant with: • IEC 60079-0; General Requirements • IEC 60079-7; Potentially Explosive Atmospheres, Protection "e" • II 3 G Ex ec IIC T4 Gc • IECEx UL 22.0039X
KC	Korean Registration of Broadcasting and Communications Equipment, compliant with Article 58-2 of Radio Waves Act, Clause 3
UKex	In conformity with the following UKex Statutory Instruments and their amendments: • Schedule 1 of the UKEX Regulation 2016 No. 1107 • Equipment protection by increased safety "e", reference certificate number UL22UKEX2499X • Zone 2 classification according to UKEX Regulation 2016 No. 1107
UKCA	In conformity with the following UK Statutory Instruments and their amendments: • 2016 No. 1091, Electromagnetic Compatibility Regulations • 2016 No. 1101, Electrical Equipment (Safety) Regulations • 2016 No. 1107, Equipment and Protective Systems Intended for Use in Potentially Explosive Atmospheres Regulations • 2012 No. 3032, Restriction of the Use of Certain Hazardous Substances in Electrical and Electronic Equipment
Morocco	In conformity with the following regulations: • Arrêté ministériel n° 6404-15 du 1 er muharram 1437 (15 octobre 2015) Équipements électriques destinés à être utilisés sous certaines limites de tension • Arrêté ministériel n° 6404-15 du 29 ramadan 1436 (16 juillet 2015) Compatibilité électromagnétique des équipements
CCC	CCC 2020122309111998 CNCA-C23-01 强制性产品认证实施规则 防爆电气 CNCA-C23-01 CCC Implementation Rule Explosion-Proof Electrical Products

(1) When product is marked. See the Product Certification link at rok.auto/certifications for Declarations of Conformity, Certificates, and other certification details.

1756-OF8I, 1756-OF8IK

ControlLogix isolated voltage/current output analog module.

1756-OF8I Module Wiring Diagram - Current Mode

IMPORTANT: Remember the following:
- If separate power sources are used, do not exceed the specific isolation voltage as listed in the specifications.
- Place additional devices anywhere in the loop.

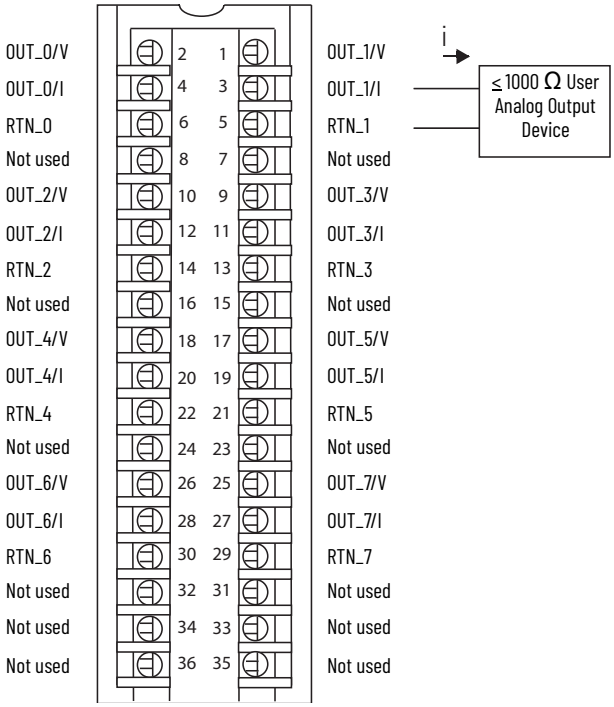

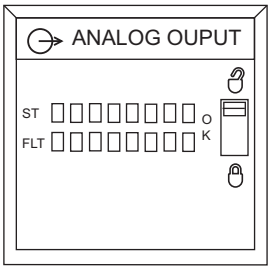

1756-OF8I Module Wiring Diagram - Voltage Mode

IMPORTANT: Remember the following:
- If separate power sources are used, do not exceed the specific isolation voltage as listed in the specifications.
- Place additional devices anywhere in the loop.

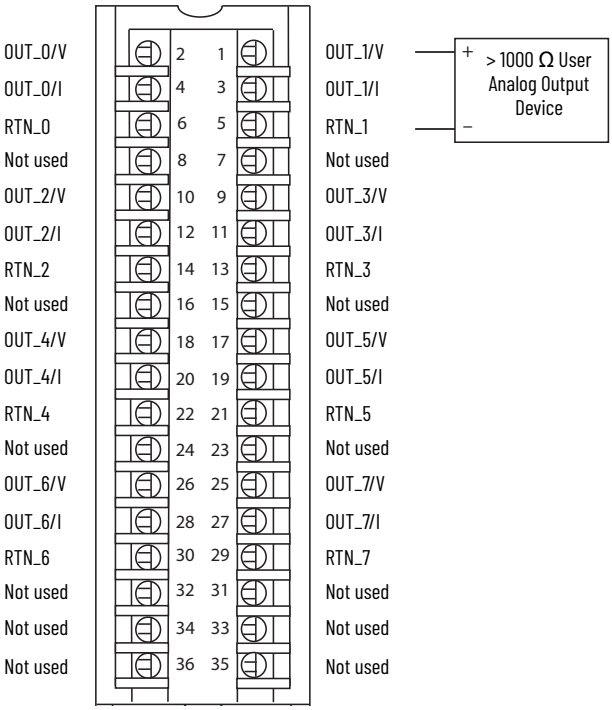

Technical Specifications

Attribute	1756-OF8I, 1756-OF8IK
Outputs	Eight isolated channels - Any combination of voltage or current mode
Output range	-10...10V 0...10V 0...5V 0...20 mA
Resolution	16-bit ±10.5V (0.32 mV/count) 0...10.5V (0.16 mV/count) 0...5.25V (0.08 mV/count) 0...21 mA (0.32 µA/count)
Current draw @ 5.1V	200 mA
Current draw @ 24V	Voltage or Current mode with 250 Ω loads = 220 mA Current mode with 500 Ω loads = 275 mA Current mode with 750 Ω loads = 340 mA Current mode with 1000 Ω loads = 385 mA
Total backplane power	Voltage mode = 6.3 W Current mode with 250 Ω loads = 6.3 W Current mode with 500 Ω loads = 7.6 W Current mode with 750 Ω loads = 9.2 W Current mode with 1000 Ω loads = 10.2 W
Power dissipation	Voltage mode: 5.4 W (18.4 BTU/hr) Current mode with 250 Ω loads: 5.4 W (18.4 BTU/hr) Current mode with 500 Ω loads: 5.8 W (19.8 BTU/hr) Current mode with 750 Ω loads: 6.5 W (22.2 BTU/hr) Current mode with 1000 Ω loads: 6.7 W (22.9 BTU/hr)
Thermal dissipation	Voltage mode = 18.4 BTU/hr Current mode with 250 Ω loads = 18.4 BTU/hr Current mode with 500 Ω loads = 19.8 BTU/hr Current mode with 750 Ω loads = 22.2 BTU/hr Current mode with 1000 Ω loads = 22.9 BTU/hr
Output impedance	46 Ω (Current output)
Open circuit detection	Current output = Yes
Short circuit detection	Voltage output = Yes
Overvoltage protection	±30V DC (voltage/current)
Drive capability	Current output = 0...1000 Ω Voltage output = >1000 Ω
Settling time	< 2 ms to 95% of final value with Resistive loads
Calibrated accuracy @ 25 °C (77 °F)	0.05%
Module error over full temperature range	0.1%
Module scan time, min	1 ms
Data format	IEEE 32-bit floating point
Module conversion method	R-Ladder DAC, monotonicity with no missing codes
Isolation voltage	250V (continuous), reinforced insulation type, outputs to backplane 250V (continuous), basic insulation type, output to output Compliant and tested according to IEC/UL 61010-1
Module keying	Electronic, software configurable
Removable terminal block	1756-TBCH 1756-TBS6H
RTB keying	User-defined mechanical
Slot width	1
Wire size	1756-TBCH Single wire connection: 0.33...2.1 mm^2 (22...14 AWG) solid or stranded shielded copper wire rated at 105 °C (221 °F), or greater, 1.2 mm (3/64 in.) insulation max. Do not wire more than one conductor on any single terminal. Double wire connection: 0.33...1.3 mm^2 (22...16 AWG) solid or stranded copper wire rated at 105 °C (221 °F), or greater, 1.2 mm (3/64 in.) insulation max. Do not wire more than two conductors on any single terminal. 1756-TBS6H Single wire connection: 0.33...2.1 mm^2 (22...14 AWG) solid or stranded shielded copper wire rated at 105 °C (221 °F), or greater, 1.2 mm (3/64 in.) insulation max. Do not wire more than one conductor on any single terminal.

Technical Specifications (Continued)

Attribute	1756-OF8I, 1756-OF8IK
Wire category[1]	2 - on signal ports
Enclosure type	None (open-style)
Temperature code	T4

(1) Use this conductor category information for planning conductor routing as described in the system-level installation manual. See the Industrial Automation Wiring and Grounding Guidelines, publication 1770-4.1.

Environmental Specifications

Attribute	1756-OF8I, 1756-OF8IK
Temperature, operating IEC 60068-2-1 (Test Ae, Operating Cold), IEC 60068-2-2 (Test Be, Operating Dry Heat), IEC 60068-2-14 (Test Nb, Operating Thermal Shock)	0 °C ≤ Ta ≤ +60 °C (+32 °F ≤ Ta ≤ +140 °F)
Temperature, nonoperating IEC 60068-2-1 (Test Ab, Unpackaged Nonoperating Cold), IEC 60068-2-2 (Test Bb, Unpackaged Nonoperating Dry Heat), IEC 60068-2-14 (Test Na, Unpackaged Nonoperating Thermal Shock)	-40...+85 °C (-40...+185 °F)
Relative humidity IEC 60068-2-30 (Test dB, Unpackaged Damp Heat)	5...95% noncondensing
Conformal Coated[1]	Yes
Corrosive Atmosphere[1] ASTM B845-97 Method H Accelerated Test (20-Day Exposure)	Severity Level G3[2] per ANSI/ISA 71.04-2013, Airborne Contaminants—Gases Severity Level CX[2][3] per IEC 60721-3-3:2019, Chemically Active Substances
Vibration IEC 60068-2-6 (Test Fc, Operating)	2 g @ 10...500 Hz
Shock, operating IEC 60068-2-27 (Test Ea, Unpackaged Shock)	30 g
Shock, nonoperating IEC 60068-2-27 (Test Ea, Unpackaged Shock)	50 g
Emissions	IEC 61000-6-4
ESD immunity IEC 61000-4-2	Series B ±8 kV contact discharges ±8 kV air discharges Series A 6 kV contact discharges 8 kV air discharges
Radiated RF immunity IEC 61000-4-3	Series B 20V/m with 1 kHz sine wave 80% AM from 80...1000 MHz 10V/m with 1 kHz sine wave 80% AM from 1000...2000 MHz 3V/m with 1 kHz sine wave 80% AM from 2000...6000 MHz Series A 10V/m with 1 kHz sine wave 80% AM from 80...2000 MHz 10V/m with 200 Hz 50% Pulse 100% AM @ 900 MHz 10V/m with 200 Hz 50% Pulse 100% AM @ 1890 MHz 3V/m with 1 kHz sine wave 80% AM from 2000...2700 MHz
EFT/B immunity IEC 61000-4-4	Series B ±4 kV at 5 kHz and 100 kHz on shielded signal ports Series A ±4 kV at 5 kHz on shielded signal ports
Surge transient immunity IEC 61000-4-5	±2 kV line-earth (CM) on shielded signal ports
Conducted RF immunity IEC 61000-4-6	Series B 20V rms with 1 kHz sine wave 80% AM from 150 kHz...80 MHz Series A 10V rms with 1 kHz sine wave 80% AM from 150 kHz...80 MHz

(1) Only applicable to modules that end with a 'K or 'XT'.
(2) The module and the corresponding RTB must remain installed at all times and the RTB door must remain closed, for the product to maintain its corrosive atmosphere rating.
(3) Up to 9.6 microns per year, corrosion rate of copper.

Certifications

Certification[1]	1756-OF8I, 1756-OF8IK
cULus	UL Listed Industrial Control Equipment, certified for US and Canada. See UL File E65584. UL Listed for Class I, Division 2 Group A,B,C,D Hazardous Locations, certified for U.S. and Canada. See UL File E194810.
CE	European Union 2014/30/EU EMC Directive, compliant with: • EN 61326-1; Meas./Control/Lab., Industrial Requirements • EN 61000-6-2; Industrial Immunity • EN 61000-6-4; Industrial Emissions • EN 61131-2; Programmable Controllers (Clause 8, Zone A & B) European Union 2014/35/EU LVD, compliant with EN 61131-2; Programmable Controllers (Clause 11)
RCM	Australian Radiocommunications Act, compliant with EN 61000-6-4; Industrial Emissions
Ex	European Union 2014/34/EU ATEX Directive, compliant with: • EN IEC 60079-0 Edition 7; General Requirements • EN IEC 60079-7; Potentially Explosive Atmospheres, Protection "e" • II 3 G Ex ec IIC T4 Gc • UL 22 ATEX 2772X
IECEx	IECEx System, compliant with: • IEC 60079-0 Edition 7; General Requirements • IEC 60079-7; Potentially Explosive Atmospheres, Protection "e" • II 3 G Ex ec IIC T4 Gc • IECEx UL 22.0039X
UKex	In conformity with the following UKex Statutory Instruments and their amendments: • Schedule 1 of the UKEX Regulation 2016 No. 1107 • Equipment protection by increased safety "e", reference certificate number UL22UKEX2499X • Zone 2 classification according to UKEX Regulation 2016 No. 1107
KC	Korean Registration of Broadcasting and Communications Equipment, compliant with Article 58-2 of Radio Waves Act, Clause 3
UKCA	In conformity with the following UK Statutory Instruments and their amendments: • 2016 No. 1091, Electromagnetic Compatibility Regulations • 2016 No. 1101, Electrical Equipment (Safety) Regulations • 2016 No. 1107, Equipment and Protective Systems Intended for Use in Potentially Explosive Atmospheres Regulations • 2012 No. 3032, Restriction of the Use of Certain Hazardous Substances in Electrical and Electronic Equipment
Morocco	In conformity with the following regulations: • Arrêté ministériel n° 6404-15 du 1 er muharram 1437 (15 octobre 2015) Équipements électriques destinés à être utilisés sous certaines limites de tension • Arrêté ministériel n° 6404-15 du 29 ramadan 1436 (16 juillet 2015) Compatibilité électromagnétique des équipements
CCC	CCC 2020122309111998 CNCA-C23-01 强制性产品认证实施规则 防爆电气 CNCA-C23-01 CCC Implementation Rule Explosion-Proof Electrical Products

(1) When product is marked. See the Product Certification link at rok.auto/certifications for Declarations of Conformity, Certificates, and other certification details.

Notes:

1756-IF8H, 1756-IF8HK

ControlLogix voltage/current analog input module with HART protocol

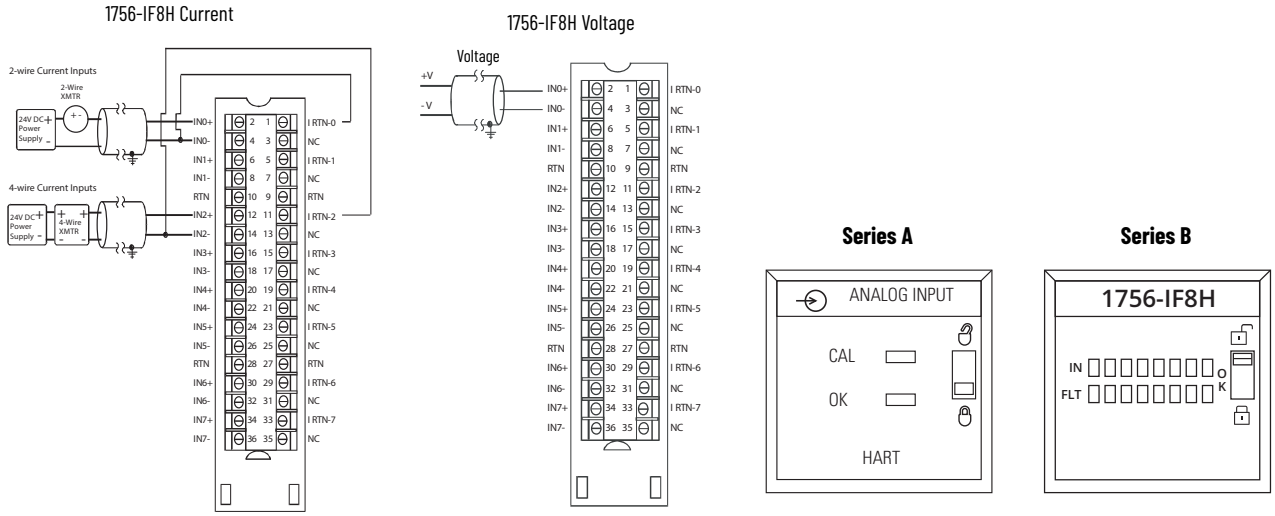

Technical Specifications

Attribute	1756-IF8H/A, 1756-IF8HK/A	1756-IF8H/B, 1756-IF8HK/B
Inputs	Eight differential voltage or current inputs, one HART modem per **module**	Eight differential voltage or current inputs, one HART modem per **channel**
Input range	±10V 0...5V 1...5V 0...10V 0...20 mA 4...20 mA	
Resolution	16...21 bits	
Voltage and current ratings	Backplane: 5.1V DC, 300 mA, 24V DC, 135 mA Input voltage range: -10...+10V Input current range: 0...20 mA, 4...20mA	Backplane: 5.1V DC, 230 mA, 24V DC, 80 mA Input voltage range: -10...+10V Input current range: 0...20 mA, 4...20mA
Total backplane power	4.77 W	3.1 W
Power dissipation	Voltage: 3.21 W Current: 4.01 W	Voltage: 3.1 W Current: 3.9 W
Thermal dissipation	Voltage: 11.0 BTU/hr Current: 13.7 BTU/hr	
Input impedance	–	
Open circuit detection time	Positive full-scale reading within 5 s	
Overvoltage protection, max	Voltage: 30V DC Current: 8V DC	
Normal mode noise rejection	> 80 dB @ 50/60 Hz	> 33 dB @ 50 Hz, > 80 dB @ 50/60 Hz
Common mode noise rejection	> 100 dB @ 50/60 Hz	> 100 dB @ 50/60 Hz (10 Hz filter)
Calibrated accuracy	Voltage: Better than 0.05% of range Current: Better than 0.15% of range	
Calibration interval	12 months	
Offset drift	90 µV/°C	

Technical Specifications (Continued)

Attribute	1756-IF8H/A, 1756-IF8HK/A	1756-IF8H/B, 1756-IF8HK/B
Gain drift with temperature	Voltage: 10 ppm/°C Current: 20 ppm/°C	
Module error	Voltage: 0.1% of range Current: 0.3% of range	
Module I/O scan time	Analog: 18...488 ms (filter dependent)	Analog: 18...488 ms (filter dependent)
Module HART scan time	Typically 1 s per HART channel enabled Estimate 10 s if all 8 channels have HART enabled Pass through messages, handheld communicators, secondary masters, communication errors, or configuration changes can significantly increase the update time	Estimate 1 s if all 8 channels have HART enabled (scan time does not increase with enabling additional channels because one HART modem is assigned per channel.) Pass through messages, handheld communicators, secondary masters, communication errors, or configuration changes can significantly increase the update time
Data format	IEEE 32-bit floating point	
Input conversion method	Sigma-Delta	
Isolation voltage	50V (continuous), Basic insulation type, input channels to backplane No isolation between individual input channels	250V (continuous), Reinforced Insulation Type, inputs to backplane. Basic Insulation Type, inputs to ground.
Module keying	Electronic, software configurable	
Removable terminal block	1756-TBCH 1756-TBS6H	
RTB keying	User-defined mechanical	
Slot width	1	
Wire size	1756-TBCH Single wire connection: 0.33...2.1 mm^2 (22...14 AWG) solid or stranded shielded copper wire rated at 105 °C (221 °F), or greater, 1.2 mm (3/64 in.) insulation max. Double wire connection: 0.33...1.3 mm^2 (22...16 AWG) solid or stranded copper wire rated at 105 °C (221 °F), or greater, 1.2 mm (3/64 in.) insulation max. 1756-TBS6H Single wire connection: 0.33...2.1 mm^2 (22...14 AWG) solid or stranded shielded copper wire rated at 105 °C (221 °F), or greater, 1.2 mm (3/64 in.) insulation max.	
Terminal block torque specs	1756-TBCH 0.5 N•m (4.4 lb•in)	
Wire category(1)	2 - on signal ports	
Wire type	Copper	
Enclosure type rating	None (open-style)	
Temperature code	T4	

(1) Use this conductor category information for planning conductor routing as described in the system-level installation manual. See the Industrial Automation Wiring and Grounding Guidelines, publication 1770-4.1.

Environmental Specifications

Attribute	1756-IF8H/A, 1756-IF8HK/A	1756-IF8H/B, 1756-IF8HK/B
Temperature, operating IEC 60068-2-1 (Test Ae, Operating Cold), IEC 60068-2-2 (Test Be, Operating Dry Heat), IEC 60068-2-14 (Test Nb, Operating Thermal Shock)	0 °C ≤ Ta ≤ +60 °C (+32 °F ≤ Ta ≤ +140 °F)	
Temperature, nonoperating IEC 60068-2-1 (Test Ab, Unpackaged Nonoperating Cold), IEC 60068-2-2 (Test Bb, Unpackaged Nonoperating Dry Heat), IEC 60068-2-14 (Test Na, Unpackaged Nonoperating Thermal Shock)	-40...+85 °C (-40...+185 °F)	
Relative humidity IEC 60068-2-30 (Test Db, Unpackaged Damp Heat)	5...95% noncondensing	
Conformal coated(1)	Yes	
Vibration IEC 60068-2-6 (Test Fc, Operating)	2 g @ 10...500 Hz	
Shock, operating IEC 60068-2-27 (Test Ea, Unpackaged Shock)	30 g	
Shock, nonoperating IEC 60068-2-27 (Test Ea, Unpackaged Shock)	50 g	
Emissions	IEC 61000-6-4	
ESD immunity IEC 61000-4-2	6 kV contact discharges 8 kV air discharges	
Radiated RF immunity IEC 61000-4-3	10V/m with 1 kHz sine wave 80% AM from 80...2000 MHz 10V/m with 200 Hz 50% Pulse 100% AM @ 900 MHz 10V/m with 200 Hz 50% Pulse 100% AM @ 1890 MHz 1V/m with 1 kHz sine wave 80% AM from 2000...2700 MHz	10V/m with 1 kHz sine wave 80% AM from 80...2000 MHz 10V/m with 200 Hz 50% Pulse 100% AM @ 900 MHz 10V/m with 200 Hz 50% Pulse 100% AM @ 1890 MHz 10V/m with 1 kHz sine wave 80% AM from 2000...6000 MHz
EFT/B immunity IEC 61000-4-4	±2 kV at 5 kHz on signal ports	
Surge transient immunity IEC 61000-4-5	±2 kV line-earth (CM) on shielded ports	
Conducted RF immunity IEC 61000-4-6	10V rms with 1 kHz sine wave 80% AM from 150 kHz...80 MHz	

(1) Only applicable to modules that end with a 'K'.

Certifications

Certification[1]	1756-IF8H, 1756-IF8HK
cULus	UL Listed Industrial Control Equipment, certified for US and Canada. See UL File E65584. UL Listed for Class I, Division 2 Group A,B,C,D Hazardous Locations, certified for U.S. and Canada. See UL File E194810.
CE	European Union 2014/30/EU EMC Directive, compliant with: • EN 61326-1; Meas./Control/Lab., Industrial Requirements • EN 61000-6-2; Industrial Immunity • EN 61000-6-4; Industrial Emissions • EN 61131-2; Programmable Controllers (Clause 8, Zone A & B) European Union 2014/35/EU LVD, compliant with EN 61131-2; Programmable Controllers (Clause 11)
RCM	Australian Radiocommunications Act, compliant with EN 61000-6-4; Industrial Emissions
Ex	European Union 2014/34/EU ATEX Directive, compliant with: • EN 60079-0; General Requirements • EN 60079-7; Potentially Explosive Atmospheres, Protection "e" • II 3 G Ex ec IIC T4 Gc • UL 20 ATEX 2408X
IECEx	IECEx System, compliant with: • IEC 60079-0; General Requirements • IEC 60079-7; Potentially Explosive Atmospheres, Protection "e" • II 3 G Ex ec IIC T4 Gc • IECEx UL 20.0084X
KC	Korean Registration of Broadcasting and Communications Equipment, compliant with Article 58-2 of Radio Waves Act, Clause 3
UKex	In conformity with the following UKex Statutory Instruments and their amendments: • Schedule 1 of the UKEX Regulation 2016 No. 1107 • Equipment protection by increased safety "e", reference certificate number UL22UKEX2489X • Zone 2 classification according to UKEX Regulation 2016 No. 1107
UKCA	In conformity with the following UK Statutory Instruments and their amendments: • 2016 No. 1091, Electromagnetic Compatibility Regulations • 2016 No. 1101, Electrical Equipment (Safety) Regulations • 2016 No. 1107, Equipment and Protective Systems Intended for Use in Potentially Explosive Atmospheres Regulations • 2012 No. 3032, Restriction of the Use of Certain Hazardous Substances in Electrical and Electronic Equipment
Morocco	In conformity with the following regulations: • Arrêté ministériel n° 6404-15 du 1 er muharram 1437 (15 octobre 2015) Équipements électriques destinés à être utilisés sous certaines limites de tension • Arrêté ministériel n° 6404-15 du 29 ramadan 1436 (16 juillet 2015) Compatibilité électromagnétique des équipements
CCC	CCC 2020122309111998 CNCA-C23-01 强制性产品认证实施规则 防爆电气 CNCA-C23-01 CCC Implementation Rule Explosion-Proof Electrical Products

(1) When product is marked. See the Product Certification link at rok.auto/certifications for Declarations of Conformity, Certificates, and other certification details.

1756-IF8IH, 1756-IF8IHK

ControlLogix isolated current analog input module with HART protocol

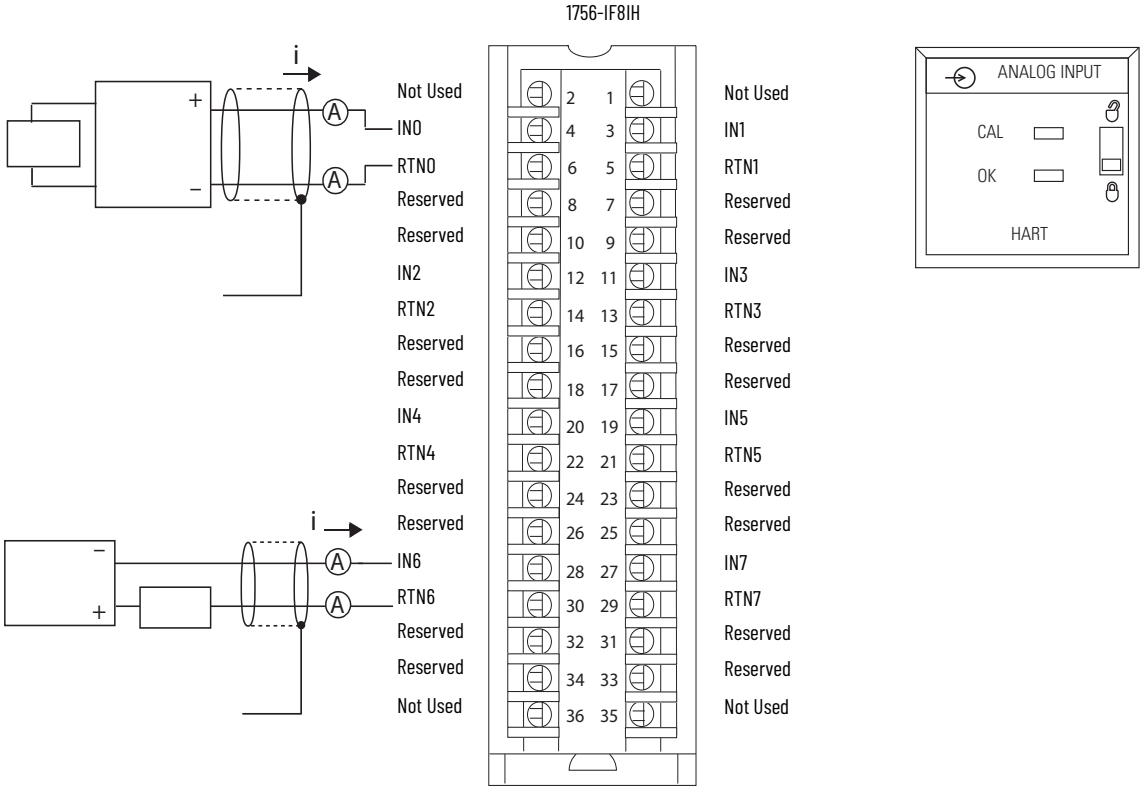

Technical Specifications

Attribute	1756-IF8IH, 1756-IF8IHK
Inputs	Eight current inputs
Input range	0...20 mA (0...20.58 mA) 4...20 mA (3.42...20.58 mA)
Resolution	16...21 bits
Voltage and current ratings	Backplane: 210 mA @ 5.1V DC, 110 mA @ 24V DC Input voltage range: 5...30V DC Input current range: 0...20 mA, 4...20 mA
Power dissipation within module	4 W
Inrush current	400 mA @ 5V 450 mA @ 24V
Isolation voltage	250V (continuous) Reinforced Insulation Type, inputs to backplane. Basic Insulation Type, input to input, and inputs to ground.
Input impedance	250 Ω ±5 Ω
Open circuit detection time	5 s (4...20 mA range only)
Input overvoltage protection	+28.8V DC
Normal mode noise rejection	> 90 dB @ 50 Hz and 60 Hz with 10 Hz filter > 74 dB @ 50 Hz and 60 Hz with 15 Hz filter > 33 dB @ 50 Hz and > 90 dB @ 60 Hz with 20 Hz filter
Common mode noise rejection	> 90 dB @ 50 Hz and 60 Hz (10 Hz, 15 Hz, or 20 Hz filters only)
Calibrated accuracy at 25 °C with HART disabled	0.15...1.5% of full-scale, filter dependent
Calibrated accuracy at 25 °C with HART enabled	1.5% of full-scale with 250 Hz filter 0.5% of full-scale with 100 Hz filter 0.2% of full-scale with 50 Hz or 60 Hz filter 0.15% of full-scale with 15 Hz or 20 Hz filter Monotonicity not guaranteed

Technical Specifications (Continued)

Attribute	1756-IF8IH, 1756-IF8IHK
Calibrated accuracy over full temperature range with HART enabled	1.8% of full-scale with 250 Hz filter 0.8% of full-scale with 100 Hz filter 0.5% of full-scale with 50 Hz or 60 Hz filter 0.4% of full-scale with 15 Hz or 20 Hz filter Monotonicity not guaranteed
Calibration interval	12 months typical
Input offset drift with temperature	≤ 300 µA/°C
Gain drift with temperature	20 ppm/°C
Module error over full temperature range with HART disabled	0.3% of range (all filters)
Module I/O scan time	Analog: 15...488 ms (filter dependent)
Module HART scan time	Estimate 1 s if all 8 channels have HART enabled (scan time does not increase with enabling additional channels because one HART modem is assigned per channel.) Pass through messages, handheld communicators, secondary masters, communication errors, or configuration changes can significantly increase the update time
Data format	32-bit floating point
Input conversion method	Sigma-Delta ADC (24-bit converter)
Module keying	Electronic, software configurable
Removable terminal block	1756-TBCH 1756-TBS6H
RTB keying	User-defined mechanical
Slot width	1
Wire Size	1756-TBCH Single wire connection: 0.33...2.1 mm^2 (22...14 AWG) solid or stranded shielded copper wire rated at 105 °C (221 °F), or greater, 1.2 mm (3/64 in.) insulation max. Double wire connection: 0.33...1.3 mm^2 (22...16 AWG) solid or stranded copper wire rated at 105 °C (221 °F), or greater, 1.2 mm (3/64 in.) insulation max. 1756-TBS6H Single wire connection: 0.33...2.1 mm^2 (22...14 AWG) solid or stranded shielded copper wire rated at 105 °C (221 °F), or greater, 1.2 mm (3/64 in.) insulation max.
Terminal block torque specs	1756-TBCH 0.4 N•m (4. 4 lb•in)
Wire category	2 - on signal ports(1)
Wire type	Copper
Enclosure type	None (open-style)
Temperature code	T4

(1) Use this conductor category information for planning conductor routing. See Industrial Automation Wiring and Grounding Guidelines, publication 1770-4.1.

Environmental Specifications

Attribute	1756-IF8IH, 1756-IF8IHK
Temperature, operating IEC 60068-2-1 (Test Ae, Operating Cold), IEC 60068-2-2 (Test Be, Operating Dry Heat), IEC 60068-2-14 (Test Nb, Operating Thermal Shock)	0 °C ≤ Ta ≤ +60 °C (+32 °F ≤ Ta ≤ +140 °F)
Temperature, nonoperating IEC 60068-2-1 (Test Ab, Unpackaged Nonoperating Cold), IEC 60068-2-2 (Test Bb, Unpackaged Nonoperating Dry Heat), IEC 60068-2-14 (Test Na, Unpackaged Nonoperating Thermal Shock)	-40...+85 °C (-40...+185 °F)
Relative humidity IEC 60068-2-30 (Test dB, Unpackaged Damp Heat)	5...95% noncondensing
Conformal coated(1)	Yes
Vibration IEC 60068-2-6 (Test Fc, Operating)	2 g @ 10...500 Hz
Shock, operating IEC 60068-2-27 (Test Ea, Unpackaged Shock)	30 g
Shock, nonoperating IEC 60068-2-27 (Test Ea, Unpackaged Shock)	50 g
Emissions	IEC 61000-6-4
ESD immunity IEC 61000-4-2	6 kV contact discharges 8 kV air discharges
Radiated RF immunity IEC 61000-4-3	10V/m with 1 kHz sine wave 80% AM from 80...2000 MHz 10V/m with 200 Hz 50% Pulse 100% AM @ 900 MHz 10V/m with 200 Hz 50% Pulse 100% AM @ 1890 MHz 10V/m with 1 kHz sine wave 80% AM from 2000...2700 MHz
EFT/B immunity IEC 61000-4-4	±2 kV at 5 kHz on signal ports
Surge transient immunity IEC 61000-4-5	±2 kV line-earth (CM) on shielded ports
Conducted RF immunity IEC 61000-4-6	10V rms with 1 kHz sine wave 80% AM from 150 kHz...80 MHz

(1) Only applicable to modules that end with a 'K'.

Certifications

Certification[1]	1756-IF8IH, 1756-IF8IHK
cULus	UL Listed Industrial Control Equipment, certified for US and Canada. See UL File E65584. UL Listed for Class I, Division 2 Group A,B,C,D Hazardous Locations, certified for U.S. and Canada. See UL File E194810.
CE	European Union 2014/30/EU EMC Directive, compliant with: • EN 61326-1; Meas./Control/Lab., Industrial Requirements • EN 61000-6-2; Industrial Immunity • EN 61000-6-4; Industrial Emissions • EN 61131-2; Programmable Controllers (Clause 8, Zone A & B) European Union 2014/35/EU LVD, compliant with EN 61131-2; Programmable Controllers (Clause 11)
RCM	Australian Radiocommunications Act, compliant with EN 61000-6-4; Industrial Emissions
Ex	European Union 2014/34/EU ATEX Directive, compliant with: • EN 60079-0; General Requirements • EN 60079-7; Potentially Explosive Atmospheres, Protection "e" • II 3 G Ex ec IIC T4 Gc • UL 20 ATEX 2408X
IECEx	IECEx System, compliant with: • IEC 60079-0; General Requirements • IEC 60079-7; Potentially Explosive Atmospheres, Protection "e" • II 3 G Ex ec IIC T4 Gc • IECEx UL 20.0084X
KC	Korean Registration of Broadcasting and Communications Equipment, compliant with Article 58-2 of Radio Waves Act, Clause 3
UKex	In conformity with the following UKex Statutory Instruments and their amendments: • Schedule 1 of the UKEX Regulation 2016 No. 1107 • Equipment protection by increased safety "e", reference certificate number UL22UKEX2489X • Zone 2 classification according to UKEX Regulation 2016 No. 1107
UKCA	In conformity with the following UK Statutory Instruments and their amendments: • 2016 No. 1091, Electromagnetic Compatibility Regulations • 2016 No. 1101, Electrical Equipment (Safety) Regulations • 2016 No. 1107, Equipment and Protective Systems Intended for Use in Potentially Explosive Atmospheres Regulations • 2012 No. 3032, Restriction of the Use of Certain Hazardous Substances in Electrical and Electronic Equipment
Morocco	In conformity with the following regulations: • Arrêté ministériel n° 6404-15 du 1 er muharram 1437 (15 octobre 2015) Équipements électriques destinés à être utilisés sous certaines limites de tension • Arrêté ministériel n° 6404-15 du 29 ramadan 1436 (16 juillet 2015) Compatibilité électromagnétique des équipements
CCC	CCC 2020122309111998 CNCA-C23-01 强制性产品认证实施规则 防爆电气 CNCA-C23-01 CCC Implementation Rule Explosion-Proof Electrical Products

(1) When product is marked. See the Product Certification link at rok.auto/certifications for Declarations of Conformity, Certificates, and other certification details.

1756-IF16H, 1756-IF16HK

ControlLogix current analog input module with HART protocol

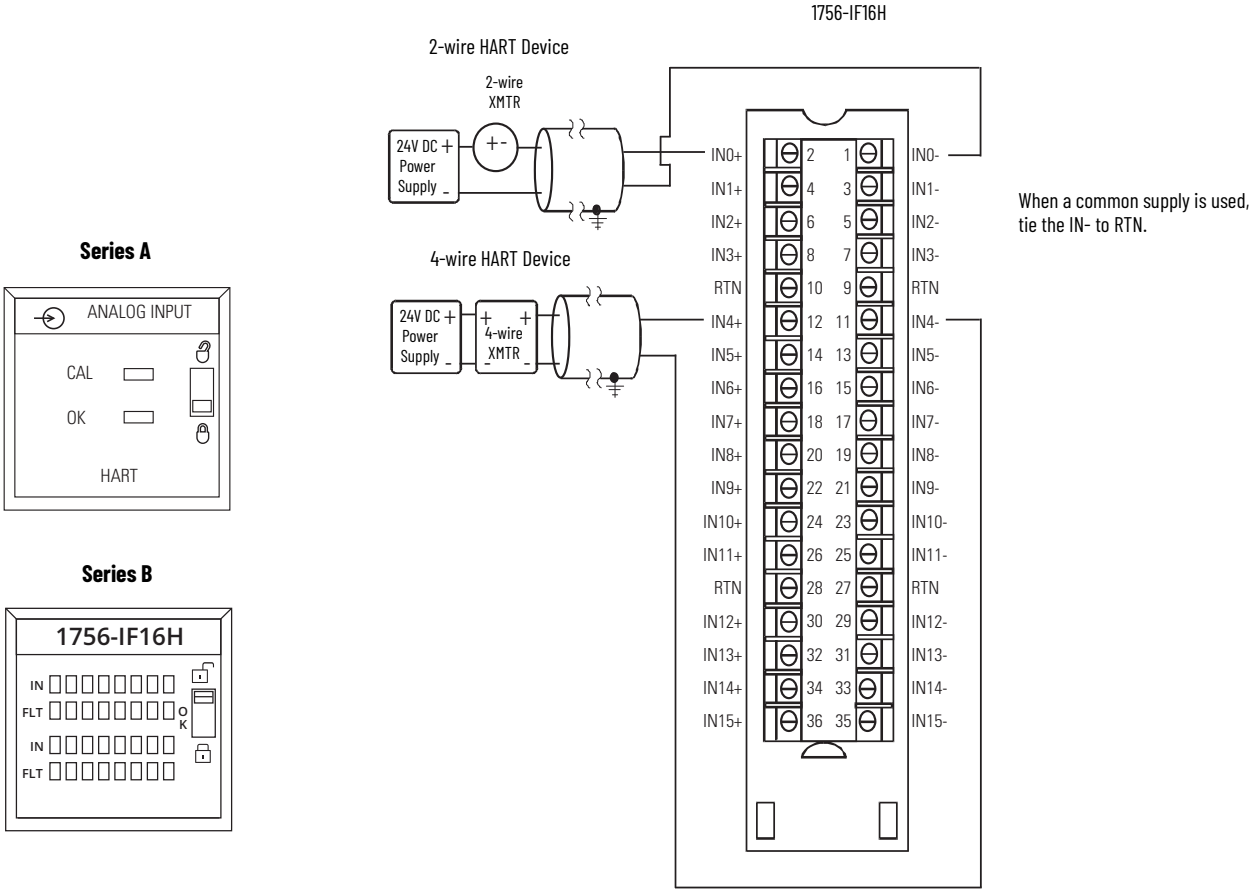

Technical Specifications

Attribute	1756-IF16H/A, 1756-IF16HK/A	1756-IF16H/B, 1756-IF16HK/B
Inputs	Sixteen differential, current Dedicated HART modem per channel	
Input range	0...20 mA 4...20 mA	
Resolution	16...21 bits	
Voltage and current ratings	Backplane: 5.1V DC @ 200 mA, 24V DC @ 125 mA Input current range: 0...20 mA, 4...20 mA	Backplane: 5.1V DC @ 230 mA, 24V DC @ 100 mA Input current range: 0...20 mA, 4...20 mA
Total backplane power	4.02 W	3.58 W
Power dissipation, max	6 W	
Isolation voltage	50V (continuous), Basic insulation type, Input Channels to Backplane No isolation between individual Input Channels	250V (continuous), Reinforced Insulation Type, inputs to backplane. Basic Insulation Type inputs to ground.
Thermal dissipation	12 BTU/hr	
Input impedance	249 Ω	
Open circuit detection time	Positive full-scale reading within 5 s	
Overvoltage protection, max	8V DC	
Normal mode noise rejection	74 dB @ 50/60 Hz (15 Hz filter) 90 dB @ 60 Hz (20 Hz filter)	
Common mode noise rejection	> 90 dB @ 50/60 Hz (15 Hz and 20 Hz filters only)	> 100 dB @ 50/60 Hz (15 Hz and 20 Hz filters)
Repeatability	Better than 0.01% of range (15 Hz and 20 Hz filters only)	
Calibrated accuracy	Better than 0.13% of range (all filters)	
Calibration interval	12 months typical	

Technical Specifications (Continued)

Attribute	1756-IF16H/A, 1756-IF16HK/A	1756-IF16H/B, 1756-IF16HK/B
Offset drift	27 µV/°C	15PPM/C
Gain drift with temperature	11 ppm/°C	
Module error	0.3% of range	
Module I/O scan time	Analog: 11...328 ms (filter dependent)	
Module HART scan time	Estimate 1 s if all 16 channels have HART enabled (scan time does not increase with enabling additional channels because one HART modem is assigned per channel.) Pass through messages, handheld communicators, secondary masters, communication errors, or configuration changes can significantly increase the update time	
Data format	IEEE 32-bit floating point	
Input conversion method	Sigma-Delta	
Module keying	Electronic, software configurable	
Removable terminal block	1756-TBCH 1756-TBS6H	
RTB keying	User-defined mechanical	
Slot width	1	
Wire size	1756-TBCH Single wire connection: 0.33...2.1 mm^2 (22...14 AWG) solid or stranded shielded copper wire rated at 105 °C (221 °F), or greater, 1.2 mm (3/64 in.) insulation max. Double wire connection: 0.33...1.3 mm^2 (22...16 AWG) solid or stranded copper wire rated at 105 °C (221 °F), or greater, 1.2 mm (3/64 in.) insulation max. 1756-TBS6H Single wire connection: 0.33...2.1 mm^2 (22...14 AWG) solid or stranded shielded copper wire rated at 105 °C (221 °F), or greater, 1.2 mm (3/64 in.) insulation max.	
Terminal block torque spec	1756-TBCH 0.5 N•m (4.4 lb•in)	
Wire category(1)	2 - on signal ports	
Wire type	Copper	
Enclosure type rating	None (open-style)	
Temperature code	T4	

(1) Use this Conductor Category information for planning conductor routing. See the Industrial Automation Wiring and Grounding Guidelines, publication 1770-4.1.

Environmental Specifications

Attribute	1756-IF16H/A, 1756-IF16HK/A	1756-IF16H/B, 1756-IF16HK/B
Temperature, operating IEC 60068-2-1 (Test Ae, Operating Cold), IEC 60068-2-2 (Test Be, Operating Dry Heat), IEC 60068-2-14 (Test Nb, Operating Thermal Shock)	0 °C ≤ Ta ≤ +60 °C (+32 °F ≤ Ta ≤ +140 °F)	
Temperature, nonoperating IEC 60068-2-1 (Test Ab, Unpackaged Nonoperating Cold), IEC 60068-2-2 (Test Bb, Unpackaged Nonoperating Dry Heat), IEC 60068-2-14 (Test Na, Unpackaged Nonoperating Thermal Shock)	-40...+85 °C (-40...+185 °F)	
Relative humidity IEC 60068-2-30 (Test dB, Unpackaged Damp Heat)	5...95% noncondensing	
Conformal coated(1)	Yes	
Vibration IEC 60068-2-6 (Test Fc, Operating)	2 g @ 10...500 Hz	
Shock, operating IEC 60068-2-27 (Test Ea, Unpackaged Shock)	30 g	
Shock, nonoperating IEC 60068-2-27 (Test Ea, Unpackaged Shock):	50 g	
Emissions	IEC 61000-6-4	
ESD immunity IEC 61000-4-2	6 kV contact discharges 8 kV air discharges	
Radiated RF immunity IEC 61000-4-3	10V/m with 1 kHz sine wave 80% AM from 80...2000 MHz 10V/m with 200 Hz 50% Pulse 100% AM @ 900 MHz 10V/m with 200 Hz 50% Pulse 100% AM @ 1890 MHz 1V/m with 1 kHz sine wave 80% AM from 2000...2700 MHz	10V/m with 1 kHz sine wave 80% AM from 80...2000 MHz 10V/m with 200 Hz 50% Pulse 100% AM @ 900 MHz 10V/m with 200 Hz 50% Pulse 100% AM @ 1890 MHz 10V/m with 1 kHz sine wave 80% AM from 2000...6000 MHz
EFT/B immunity IEC 61000-4-4	±2 kV at 5 kHz on signal ports	
Surge transient immunity IEC 61000-4-5	±2 kV line-earth (CM) on shielded ports	
Conducted RF immunity IEC 61000-4-6	10V rms with 1 kHz sine wave 80% AM from 150 kHz...80 MHz	

(1) Only applicable to modules that end with a 'K'.

Certifications

Certification[1]	1756-IF16H, 1756-IF16HK
cULus	UL Listed Industrial Control Equipment, certified for US and Canada. See UL File E65584. UL Listed for Class I, Division 2 Group A,B,C,D Hazardous Locations, certified for U.S. and Canada. See UL File E194810.
CE	European Union 2014/30/EU EMC Directive, compliant with: • EN 61326-1; Meas./Control/Lab., Industrial Requirements • EN 61000-6-2; Industrial Immunity • EN 61000-6-4; Industrial Emissions • EN 61131-2; Programmable Controllers (Clause 8, Zone A & B) European Union 2014/35/EU LVD, compliant with EN 61131-2; Programmable Controllers (Clause 11)
RCM	Australian Radiocommunications Act, compliant with EN 61000-6-4; Industrial Emissions
Ex	European Union 2014/34/EU ATEX Directive, compliant with: • EN 60079-0; General Requirements • EN 60079-7; Potentially Explosive Atmospheres, Protection "e" • II 3 G Ex ec IIC T4 Gc • UL 20 ATEX 2408X
IECEx	IECEx System, compliant with: • IEC 60079-0; General Requirements • IEC 60079-7; Potentially Explosive Atmospheres, Protection "e" • II 3 G Ex ec IIC T4 Gc • IECEx UL 20.0084X
KC	Korean Registration of Broadcasting and Communications Equipment, compliant with Article 58-2 of Radio Waves Act, Clause 3
UKex	In conformity with the following UKex Statutory Instruments and their amendments: • Schedule 1 of the UKEX Regulation 2016 No. 1107 • Equipment protection by increased safety "e", reference certificate number UL22UKEX2489X • Zone 2 classification according to UKEX Regulation 2016 No. 1107
UKCA	In conformity with the following UK Statutory Instruments and their amendments: • 2016 No. 1091, Electromagnetic Compatibility Regulations • 2016 No. 1101, Electrical Equipment (Safety) Regulations • 2016 No. 1107, Equipment and Protective Systems Intended for Use in Potentially Explosive Atmospheres Regulations • 2012 No. 3032, Restriction of the Use of Certain Hazardous Substances in Electrical and Electronic Equipment
Morocco	In conformity with the following regulations: • Arrêté ministériel n° 6404-15 du 1 er muharram 1437 (15 octobre 2015) Équipements électriques destinés à être utilisés sous certaines limites de tension • Arrêté ministériel n° 6404-15 du 29 ramadan 1436 (16 juillet 2015) Compatibilité électromagnétique des équipements
CCC	CCC 2020122309111998 CNCA-C23-01 强制性产品认证实施规则 防爆电气 CNCA-C23-01 CCC Implementation Rule Explosion-Proof Electrical Products

(1) When product is marked. See the Product Certification link at rok.auto/certifications for Declarations of Conformity, Certificates, and other certification details.

1756-IF16IH, 1756-IF16IHK

ControlLogix current analog input module with HART protocol

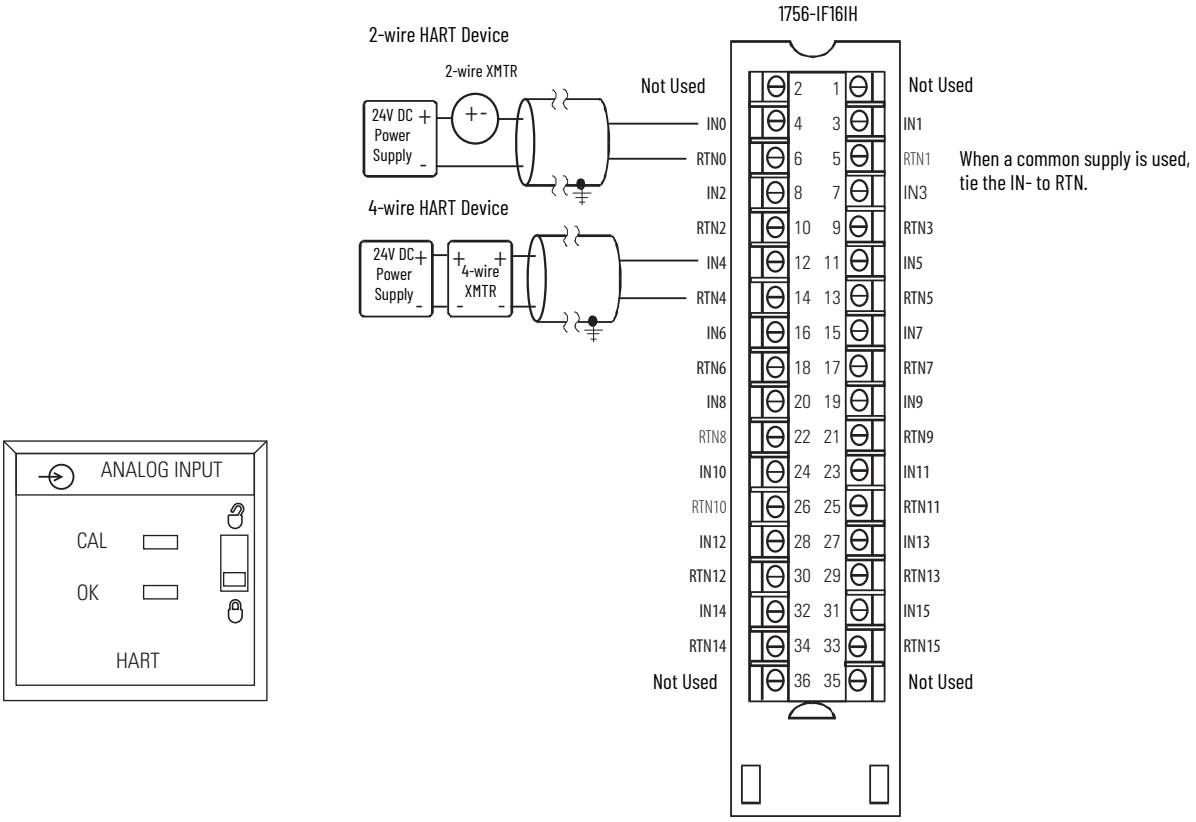

Technical Specifications

Attribute	1756-IF16IH, 1756-IF16IHK
Voltage and current ratings	Backplane: 225 mA @ 5.1V DC, 200 mA @ 24V DC 16 Inputs Input current range: 0...20 mA, 4...20 mA
Resolution	16...21 bits
Power dissipation	5.30 W
Inrush current	400 mA @ 5.1V DC 450 mA @ 24V DC
Isolation voltage	250V (continuous), reinforced insulation type, inputs to backplane Basic insulation type, input to input, and inputs to ground Compliant and tested according to IEC/UL 61010-1
Input impedance	250 Ω (±5 Ω)
Open circuit detection time	5 s, 4...20 mA range only
Input overvoltage protection	28.8V DC
Normal mode noise rejection	90 dB @ 50/60 Hz (10 Hz filter) 74 dB @ 50/60 Hz (15 Hz filter) 33 dB @ 60 Hz, 90 dB @60 Hz (20 Hz filter)
Common mode noise rejection	> 90 dB @ 50/60 Hz (10 Hz, 15 Hz, and 20 Hz filters only)
Calibrated accuracy at 25 °C with HART disabled	0.15...1.5% of full-scale, dependent on selected filter
Calibrated accuracy at 25 °C with HART enabled	1.5% of full-scale with 250 Hz filter 0.5% of full-scale with 100 Hz filter 0.2% of full-scale with 50 Hz or 60 Hz filter 0.15% of full-scale with 15 Hz or 20 Hz filter Monotonicity not guaranteed
Calibrated accuracy over full temperature range with HART enabled	1.8% of full-scale with 250 Hz filter 0.8% of full-scale with 100 Hz filter 0.5% of full-scale with 50 Hz or 60 Hz filter 0.4% of full-scale with 15 Hz or 20 Hz filter Monotonicity not guaranteed

Technical Specifications (Continued)

Attribute	1756-IF16IH, 1756-IF16IHK
Calibration interval	12 months typical
Input offset drift with temperature	300 µA/°C
Gain drift with temperature	20 ppm/°C
Module error over full temperature range with HART disabled	0.3% of range (all filters)
Module I/O scan time	Analog: 11...328 ms (filter dependent)
Module HART scan time	Estimate 1 s if all 16 channels have HART enabled (scan time does not increase with enabling additional channels because one HART modem is assigned per channel.) Pass through messages, handheld communicators, secondary masters, communication errors, or configuration changes can significantly increase the update time
Data format	IEEE 32-bit floating point
Input conversion method	Sigma-Delta ADC (24-bit converter)
Output conversion method	Sigma-Delta ADC (24-bit converter)
Module keying	ASIC does not support module keying
Removable terminal block	1756-TBCH 1756-TBS6H
RTB keying	User-defined mechanical
Slot width	1
Wire size	1756-TBCH Single wire connection: 0.33...2.1 mm^2 (22...14 AWG) solid or stranded shielded copper wire rated at 105 °C (221 °F), or greater, 1.2 mm (3/64 in.) insulation max. Double wire connection: 0.33...1.3 mm^2 (22...16 AWG) solid or stranded copper wire rated at 105 °C (221 °F), or greater, 1.2 mm (3/64 in.) insulation max. 1756-TBS6H Single wire connection: 0.33...2.1 mm^2 (22...14 AWG) solid or stranded shielded copper wire rated at 105 °C (221 °F), or greater, 1.2 mm (3/64 in.) insulation max.
Terminal block torque specs	1756-TBCH 0.5 N•m (4.4 lb·in)
Wiring category(1)	2 - on signal ports
Wire type	Copper
Enclosure type rating	None (open-style)
Temperature code	T4

(1) Use this conductor category information for planning conductor routing. See Industrial Automation Wiring and Grounding Guidelines, publication 1770-4.1.

Environmental Specifications

Attribute	1756-IF16IH, 1756-IF16IHK
Temperature, operating IEC 60068-2-1 (Test Ae, Operating Cold), IEC 60068-2-2 (Test Be, Operating Dry Heat), IEC 60068-2-14 (Test Nb, Operating Thermal Shock)	0 °C ≤ Ta ≤ +60 °C (+32 °F ≤ Ta ≤ +140 °F)
Temperature, nonoperating IEC 60068-2-1 (Test Ab, Unpackaged Nonoperating Cold), IEC 60068-2-2 (Test Bb, Unpackaged Nonoperating Dry Heat), IEC 60068-2-14 (Test Na, Unpackaged Nonoperating Thermal Shock)	-40...+85 °C (-40...+185 °F)
Relative humidity IEC 60068-2-30 (Test Db, Unpackaged Damp Heat)	5...95% noncondensing
Conformal coated[1]	Yes
Vibration IEC 60068-2-6 (Test Fc, Operating)	2 g @ 10...500 Hz
Shock, operating IEC 60068-2-27 (Test Ea, Unpackaged Shock)	30 g
Shock, nonoperating IEC 60068-2-27 (Test Ea, Unpackaged Shock)	50 g
Emissions	IEC 61000-6-4
ESD immunity IEC 61000-4-2	6 kV contact discharges 8 kV air discharges
Radiated RF immunity IEC 61000-4-3	10V/m with 1 kHz sine wave 80% AM from 80...2000 MHz 10V/m with 200 Hz 50% Pulse 100% AM @ 900 MHz 10V/m with 200 Hz 50% Pulse 100% AM @ 1890 MHz 3V/m with 1 kHz sine wave 80% AM from 2000...6000 MHz
EFT/B immunity IEC 61000-4-4	±2 kV at 5 kHz on signal ports
Surge transient immunity IEC 61000-4-5	±2 kV line-earth (CM) on shielded ports
Conducted RF immunity IEC 61000-4-6	10V rms with 1 kHz sine wave 80% AM from 150 kHz...80 MHz

(1) Only applicable to modules that end with a 'K'.

Certifications

Certification[1]	1756-IF16IH, 1756-IF16IHK
cULus	UL Listed Industrial Control Equipment, certified for US and Canada. See UL File E65584. UL Listed for Class I, Division 2 Group A,B,C,D Hazardous Locations, certified for U.S. and Canada. See UL File E194810.
CE	European Union 2014/30/EU EMC Directive, compliant with: • EN 61326-1; Meas./Control/Lab., Industrial Requirements • EN 61000-6-2; Industrial Immunity • EN 61000-6-4; Industrial Emissions • EN 61131-2; Programmable Controllers (Clause 8, Zone A & B) European Union 2014/35/EU LVD, compliant with EN 61131-2; Programmable Controllers (Clause 11)
RCM	Australian Radiocommunications Act, compliant with EN 61000-6-4; Industrial Emissions
Ex	European Union 2014/34/EU ATEX Directive, compliant with: • EN 60079-0; General Requirements • EN 60079-7; Potentially Explosive Atmospheres, Protection "e" • II 3 G Ex ec IIC T4 Gc • UL 20 ATEX 2408X
IECEx	IECEx System, compliant with: • IEC 60079-0; General Requirements • IEC 60079-7; Potentially Explosive Atmospheres, Protection "e" • II 3 G Ex ec IIC T4 Gc • IECEx UL 20.0084X
KC	Korean Registration of Broadcasting and Communications Equipment, compliant with Article 58-2 of Radio Waves Act, Clause 3
UKex	In conformity with the following UKex Statutory Instruments and their amendments: • Schedule 1 of the UKEX Regulation 2016 No. 1107 • Equipment protection by increased safety "e", reference certificate number UL22UKEX2489X • Zone 2 classification according to UKEX Regulation 2016 No. 1107
UKCA	In conformity with the following UK Statutory Instruments and their amendments: • 2016 No. 1091, Electromagnetic Compatibility Regulations • 2016 No. 1101, Electrical Equipment (Safety) Regulations • 2016 No. 1107, Equipment and Protective Systems Intended for Use in Potentially Explosive Atmospheres Regulations • 2012 No. 3032, Restriction of the Use of Certain Hazardous Substances in Electrical and Electronic Equipment
Morocco	In conformity with the following regulations: • Arrêté ministériel n° 6404-15 du 1 er muharram 1437 (15 octobre 2015) Équipements électriques destinés à être utilisés sous certaines limites de tension • Arrêté ministériel n° 6404-15 du 29 ramadan 1436 (16 juillet 2015) Compatibilité électromagnétique des équipements
CCC	CCC 2020122309111998 CNCA-C23-01 强制性产品认证实施规则 防爆电气 CNCA-C23-01 CCC Implementation Rule Explosion-Proof Electrical Products

(1) When product is marked. See the Product Certification link at rok.auto/certifications for Declarations of Conformity, Certificates, and other certification details.

1756-OF8H, 1756-OF8HK

ControlLogix voltage/current output analog module with HART protocol

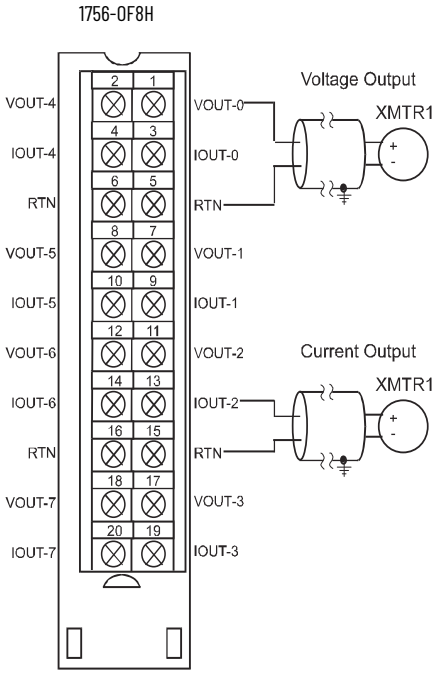

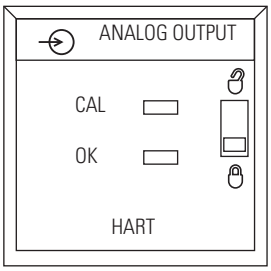

Signal and User Counts

Range	Low Signal and User Counts	High Signal and User Counts
0...20 mA	0 mA -32,768 counts	21.2916 mA 32,767 counts
±10V	-10.4336V -32,768 counts	10.4336V 32,767 counts

Technical Specifications

Attribute	1756-OF8H, 1756-OF8HK
Outputs	Eight voltages or current, one HART modem per module
Output range	±10V 0...20 mA 4...20 mA
Resolution	15...16 bits for all ranges
Voltage and current ratings	Backplane: 5.1V DC, 230 mA, 24V DC, 230 mA Output voltage range: -10...10.4V Output current range: 0...20 mA, 4...20 mA
Total backplane power	6.54 W
Power dissipation	4.92 W
Thermal dissipation	16.78 BTU/hr
Isolation voltage	50V (continuous), Basic insulation type, Output Channels to Backplane No isolation between individual output Channels
Output impedance	–
Open circuit detection time	Current output only (output must be set to < 0.1 mA)
Overvoltage protection, max	±24V DC
Drive capability	50...750 Ω with short circuit survival
Load reactance, max	Voltage: 1 µF Current: 10 µH
Settling time	Current (no HART): < 23 ms to 95% with resistive loads Current (with HART): < 37 ms to 95% with resistive loads Voltage: < 8.5 ms to 95% with resistive loads

Technical Specifications (Continued)

Attribute	1756-OF8H, 1756-OF8HK
Calibrated accuracy @ 25 °C (77 °F) with HART disabled	Voltage: Better than 0.1% of range Current: Better than 0.15% of range
Calibration interval	12 months typical
Offset drift	100 µV/°C typical 200 nA/°C typical
Gain drift with temperature	Voltage: 20 ppm/°C Current: 35 ppm/°C
Module error	Voltage: 0.15% of range Current: 0.3% of range
Module I/O scan time	Analog: 10...750 ms (RPI dependent)
Module HART scan time	Typically 1 s per HART channel enabled Estimate 10 s if all 8 channels have HART enabled Pass through messages, handheld communicators, secondary masters, communication errors, or configuration changes can significantly increase the update time
Data format	IEEE 32-bit floating point
Input conversion method	Successive approximation
Output conversion method	R-Ladder DAC, monotonicity with no missing codes
Module keying	Electronic, software configurable
Removable terminal block	1756-TBNH 1756-TBSH
RTB keying	User-defined mechanical
Slot width	1
Wire size	1756-TBNH Single wire connection: 0.33...2.1 mm^2 (22...14 AWG) solid or stranded shielded copper wire, rated at 105 °C (221 °F) or greater, 1.2 mm (3/64 in.) insulation max. Double wire connection: 0.33...1.3 mm^2 (22...16 AWG) solid or stranded copper wire, rated at 105 °C (221 °F) or greater, 1.2 mm (3/64 in.) insulation max. 1756-TBSH Single wire connection: 0.33...2.1 mm^2 (22...14 AWG) solid or stranded shielded copper wire, rated at 105 °C (221 °F) or greater, 1.2 mm (3/64 in.) insulation max.
Terminal block torque specs	1756-TBNH 1.36 N•m (12 lb·in)
Wire category(1)	2 - on signal ports
Wire type	Copper
Enclosure type rating	None (open-style)
Temperature code	T4

(1) Use this Conductor Category information for planning conductor routing. See the Industrial Automation Wiring and Grounding Guidelines, publication 1770-4.1.

Environmental Specifications

Attribute	1756-OF8H, 1756-OF8HK
Temperature, operating IEC 60068-2-1 (Test Ae, Operating Cold), IEC 60068-2-2 (Test Be, Operating Dry Heat), IEC 60068-2-14 (Test Nb, Operating Thermal Shock)	0 °C < Ta < +60 °C (+32 °F < Ta < +140 °F)
Temperature, nonoperating IEC 60068-2-1 (Test Ab, Unpackaged Nonoperating Cold), IEC 60068-2-2 (Test Bb, Unpackaged Nonoperating Dry Heat), IEC 60068-2-14 (Test Na, Unpackaged Nonoperating Thermal Shock)	-40...+85 °C (-40...+185 °F)
Relative humidity IEC 60068-2-30 (Test dB, Unpackaged Damp Heat)	5...95% noncondensing
Conformal coated(1)	Yes
Vibration IEC 60068-2-6 (Test Fc, Operating)	2 g @ 10...500 Hz
Shock, operating IEC 60068-2-27 (Test Ea, Unpackaged Shock)	30 g
Shock, nonoperating IEC 60068-2-27 (Test Ea, Unpackaged Shock)	50 g
Emissions	IEC 61000-6-4
ESD immunity IEC 61000-4-2	6 kV contact discharges 8 kV air discharges
Radiated RF immunity IEC 61000-4-3	10V/m with 1 kHz sine wave 80% AM from 80...2000 MHz 10V/m with 200 Hz 50% Pulse 100% AM @ 900 MHz 10V/m with 200 Hz 50% Pulse 100% AM @ 1890 MHz 1V/m with 1 kHz sine wave 80% AM from 2000...2700 MHz
EFT/B immunity IEC 61000-4-4	±2 kV at 5 kHz on signal ports
Surge transient immunity IEC 61000-4-5	±2 kV line-earth (CM) on shielded ports
Conducted RF immunity IEC 61000-4-6	10V rms with 1 kHz sine wave 80% AM from 150 kHz...80 MHz

(1) Only applicable to modules that end with a 'K'.

Certifications

Certification[1]	1756-OF8H, 1756-OF8HK
cULus	UL Listed Industrial Control Equipment, certified for US and Canada. See UL File E65584. UL Listed for Class I, Division 2 Group A,B,C,D Hazardous Locations, certified for U.S. and Canada. See UL File E194810.
CE	European Union 2014/30/EU EMC Directive, compliant with: • EN 61326-1; Meas./Control/Lab., Industrial Requirements • EN 61000-6-2; Industrial Immunity • EN 61000-6-4; Industrial Emissions • EN 61131-2; Programmable Controllers (Clause 8, Zone A & B) European Union 2014/35/EU LVD, compliant with EN 61131-2; Programmable Controllers (Clause 11)
RCM	Australian Radiocommunications Act, compliant with EN 61000-6-4; Industrial Emissions
Ex	European Union 2014/34/EU ATEX Directive, compliant with: • EN 60079-0; General Requirements • EN 60079-7; Potentially Explosive Atmospheres, Protection "e" • II 3 G Ex ec IIC T4 Gc • UL 20 ATEX 2408X
IECEx	IECEx System, compliant with: • IEC 60079-0; General Requirements • IEC 60079-7; Potentially Explosive Atmospheres, Protection "e" • II 3 G Ex ec IIC T4 Gc • IECEx UL 20.0084X
KC	Korean Registration of Broadcasting and Communications Equipment, compliant with Article 58-2 of Radio Waves Act, Clause 3
UKex	In conformity with the following UKex Statutory Instruments and their amendments: • Schedule 1 of the UKEX Regulation 2016 No. 1107 • Equipment protection by increased safety "e", reference certificate number UL22UKEX2489X • Zone 2 classification according to UKEX Regulation 2016 No. 1107
UKCA	In conformity with the following UK Statutory Instruments and their amendments: • 2016 No. 1091, Electromagnetic Compatibility Regulations • 2016 No. 1101, Electrical Equipment (Safety) Regulations • 2016 No. 1107, Equipment and Protective Systems Intended for Use in Potentially Explosive Atmospheres Regulations • 2012 No. 3032, Restriction of the Use of Certain Hazardous Substances in Electrical and Electronic Equipment
Morocco	In conformity with the following regulations: • Arrêté ministériel n° 6404-15 du 1 er muharram 1437 (15 octobre 2015) Équipements électriques destinés à être utilisés sous certaines limites de tension • Arrêté ministériel n° 6404-15 du 29 ramadan 1436 (16 juillet 2015) Compatibilité électromagnétique des équipements
CCC	CCC 2020122309111998 CNCA-C23-01 强制性产品认证实施规则 防爆电气 CNCA-C23-01 CCC Implementation Rule Explosion-Proof Electrical Products

(1) When product is marked. See the Product Certification link at rok.auto/certifications for Declarations of Conformity, Certificates, and other certification details.

1756-OF8IH, 1756-OF8IHK

ControlLogix isolated HART current analog output module

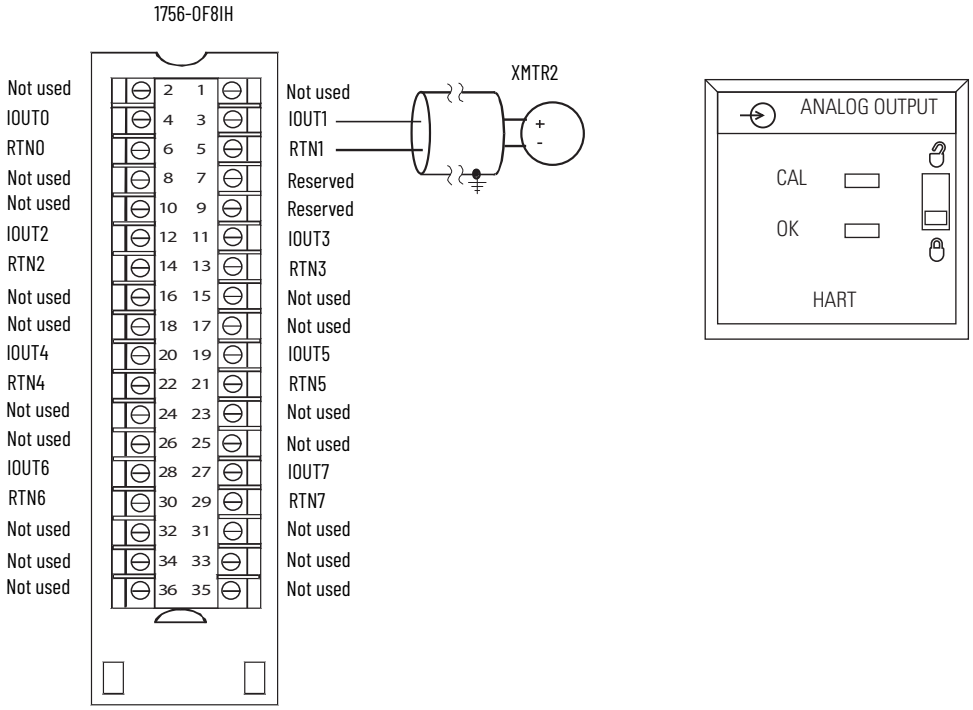

Signal and User Counts

Range	Low Signal	High Signal
0...21 mA	0 mA	21.2916 mA

Technical Specifications

Attribute	1756-OF8IH, 1756-OF8IHK
Outputs	8 current
Output range	0...20 mA 4...20 mA
Resolution	15 bits across 24 mA, 732 nA per bit
Voltage and current ratings	Backplane: 220 mA @ 5.1V DC, 360 mA @ 24V DC Output voltage range: 5...30V DC Output current range: 0...20 mA, 4...20 mA
Current draw @ 24V	400 mA (estimated)
Power dissipation, max	6.5 W nominal (< 6.4 W with 50 Ω load on all channels) (< 6.5 W with 250 Ω load on all channels) (< 6.7 W with 750 Ω load on all channels)
Open circuit detection	Current output only (output must be set ≥ 0.1 mA)
Overvoltage protection, max	±24V DC
Output short circuit protection	Current electronically limited to ≤ 21 mA with no damage
Drive capability	50...750 Ω with short circuit survival
Load reactance, max	10 µH
Settling time	HART not enabled: < 23 ms to 95% with resistive loads HART enabled: < 100 ms to 95% with resistive loads
Calibrated accuracy @ 25 °C (77 °F)	0.15% @ 4...20 mA
Calibration interval	12 months typical
Offset drift	±3 ppm of full-scale range/°C (72 nA/°C typical)
Gain drift with temperature	±4 ppm of full-scale range/°C
Module error	0.3% @ 4...20 mA
Module I/O scan time	Analog: 11...750 ms (RPI dependent)

Technical Specifications (Continued)

Attribute	1756-OF8IH, 1756-OF8IHK
Module HART scan time	Estimate 1 s if all 8 channels have HART enabled (scan time does not increase with enabling additional channels because one HART modem is assigned per channel.) Pass through messages, handheld communicators, secondary masters, communication errors, or configuration changes can significantly increase the update time
Data format	IEEE 32-bit floating point
Output conversion method	R-Ladder DAC
Isolation voltage	250V (continuous) Reinforced Insulation Type, outputs to backplane. Basic Insulation Type, output to output, and outputs to ground.
Module keying	Electronic, software configurable
Removable terminal block	1756-TBCH 1756-TBS6H
RTB keying	User-defined mechanical
Slot width	1
Wire size	1756-TBCH Single wire connection: 0.33...2.1 mm^2 (22...14 AWG) solid or stranded shielded copper wire rated at 105 °C (221 °F), or greater, 1.2 mm (3/64 in.) insulation max. Double wire connection: 0.33...1.3 mm^2 (22...16 AWG) solid or stranded copper wire rated at 105 °C (221 °F), or greater, 1.2 mm (3/64 in.) insulation max. 1756-TBS6H Single wire connection: 0.33...2.1 mm^2 (22...14 AWG) solid or stranded shielded copper wire rated at 105 °C (221 °F), or greater, 1.2 mm (3/64 in.) insulation max.
Terminal block torque specs	1756-TBCH 0.5 N•m (4.4 lb•in)
Wiring category(1)	2 - on signal ports
Wire type	Copper
Enclosure type rating	None (open-style)
Temperature code	T4

(1) Use this Conductor Category information for planning conductor routing. See the Industrial Automation Wiring and Grounding Guidelines, publication 1770-4.1.

Environmental Specifications

Attribute	1756-OF8IH, 1756-OF8IHK
Temperature, operating IEC 60068-2-1 (Test Ae, Operating Cold), IEC 60068-2-2 (Test Be, Operating Dry Heat), IEC 60068-2-14 (Test Nb, Operating Thermal Shock)	0 °C ≤ Ta ≤ +60 °C (+32 °F ≤ Ta ≤ +140 °F)
Temperature, nonoperating IEC 60068-2-1 (Test Ab, Unpackaged Nonoperating Cold), IEC 60068-2-2 (Test Bb, Unpackaged Nonoperating Dry Heat), IEC 60068-2-14 (Test Na, Unpackaged Nonoperating Thermal Shock)	-40...+85 °C (-40...+185 °F)
Relative humidity IEC 60068-2-30 (Test dB, Unpackaged Damp Heat)	5...95% noncondensing
Conformal coated(1)	Yes
Vibration (operating) IEC 60068-2-6 (Test Fc, Operating)	2 g @ 10...500 Hz
Shock, operating IEC 60068-2-27 (Test Ea, Unpackaged Shock)	30 g
Shock, nonoperating IEC 60068-2-27 (Test Ea, Unpackaged Shock)	30 g
Emissions	IEC 61000-6-4
ESD immunity IEC 61000-4-2	6 kV contact discharges 8 kV air discharges
Radiated RF immunity IEC 61000-4-3	10V/m with 1 kHz sine-wave 80% AM from 80...2000 MHz 10V/m with 200 Hz square wave 50% Pulse 100% AM @ 900 MHz 10V/m with 200 Hz square wave 50% Pulse 100% AM @ 1890 MHz 10V/m with 1 kHz sine-wave 80% AM from 2000...2700 MHz
EFT/B immunity IEC 61000-4-4	±2 kV @ 5 kHz on signal ports
Surge transient immunity IEC 61000-4-5	±2 kV line-earth (CM) on shielded ports
Conducted RF immunity IEC 61000-4-6	10V rms with 1 kHz sine wave 80% AM from 150 kHz...80 MHz

(1) Only applicable to modules that end with a 'K'.

Certifications

Certification[1]	1756-OF8IH, 1756-OF8IHK
cULus	UL Listed Industrial Control Equipment, certified for US and Canada. See UL File E65584. UL Listed for Class I, Division 2 Group A,B,C,D Hazardous Locations, certified for U.S. and Canada. See UL File E194810.
CE	European Union 2014/30/EU EMC Directive, compliant with: • EN 61326-1; Meas./Control/Lab., Industrial Requirements • EN 61000-6-2; Industrial Immunity • EN 61000-6-4; Industrial Emissions • EN 61131-2; Programmable Controllers (Clause 8, Zone A & B) European Union 2014/35/EU LVD, compliant with EN 61131-2; Programmable Controllers (Clause 11)
RCM	Australian Radiocommunications Act, compliant with EN 61000-6-4; Industrial Emissions
Ex	European Union 2014/34/EU ATEX Directive, compliant with: • EN 60079-0; General Requirements • EN 60079-7; Potentially Explosive Atmospheres, Protection "e" • II 3 G Ex ec IIC T4 Gc • UL 20 ATEX 2408X
IECEx	IECEx System, compliant with: • IEC 60079-0; General Requirements • IEC 60079-7; Potentially Explosive Atmospheres, Protection "e" • II 3 G Ex ec IIC T4 Gc • IECEx UL 20.0084X
KC	Korean Registration of Broadcasting and Communications Equipment, compliant with Article 58-2 of Radio Waves Act, Clause 3
UKex	In conformity with the following UKex Statutory Instruments and their amendments: • Schedule 1 of the UKEX Regulation 2016 No. 1107 • Equipment protection by increased safety "e", reference certificate number UL22UKEX2489X • Zone 2 classification according to UKEX Regulation 2016 No. 1107
UKCA	In conformity with the following UK Statutory Instruments and their amendments: • 2016 No. 1091, Electromagnetic Compatibility Regulations • 2016 No. 1101, Electrical Equipment (Safety) Regulations • 2016 No. 1107, Equipment and Protective Systems Intended for Use in Potentially Explosive Atmospheres Regulations • 2012 No. 3032, Restriction of the Use of Certain Hazardous Substances in Electrical and Electronic Equipment
Morocco	In conformity with the following regulations: • Arrêté ministériel n° 6404-15 du 1 er muharram 1437 (15 octobre 2015) Équipements électriques destinés à être utilisés sous certaines limites de tension • Arrêté ministériel n° 6404-15 du 29 ramadan 1436 (16 juillet 2015) Compatibilité électromagnétique des équipements
CCC	CCC 2020122309111998 CNCA-C23-01 强制性产品认证实施规则 防爆电气 CNCA-C23-01 CCC Implementation Rule Explosion-Proof Electrical Products

(1) When product is marked. See the Product Certification link at rok.auto/certifications for Declarations of Conformity, Certificates, and other certification details.

1756-CMEE1Y1

The 1756-CMEE1Y1 ControlLogix Embedded Edge Compute module is a chassis-based module that lets you communicate directly with a Logix controller via the system backplane and over a network. The Embedded Edge Compute module offers FactoryTalk® Optix Studio™ to create custom applications.

Technical Specifications

Attribute	1756-CMEE1Y1
Embedded operating system	Linux Yocto 64-bit
Onboard memory	4 GB
eMMC memory	20 GB
microSD™ card capacity(1)	32 GB
Voltage and current ratings	5.1V DC @ 1.40 A
Power consumption	12 W
Power dissipation, max	7 W
Thermal dissipation	23.88 BTU/hr
Weight, approx	0.470 kg (1.036 lb)
Slot width	1
Module location	ControlLogix chassis, any slot
Chassis	1756-A4, 1756-A7, 1756-A10, 1756-A13, 1756-A17 Series B, Series C
Wire size	Ethernet connections Ethernet cabling and installation according to IEC 61918 and IEC 61784-5-2
Wiring category(2)	Category 3, USB port
	Category 2, Ethernet ports
Temperature code	T5
Enclosure type rating	None (open-style)

(1) See microSD Card on page 242.

(2) Use this Conductor Category information for planning conductor routing. See Industrial Automation Wiring and Grounding Guidelines, publication 1770-4.1.

Environmental Specifications

Attribute	1756-CMEE1Y1
Temperature, surrounding air, max	60 °C (140 °F) Standard Chassis, Series C 50 °C (122 °F) Standard Chassis, Series B
Vibration IEC 60068-2-6 (Test Fc, Operating)	2 g @ 10...500 Hz
Shock, nonoperating and operating IEC 60068-2-27 (Test Ea, Unpackaged Shock)	30 g
Emissions	IEC 61000-6-4
ESD immunity IEC 61000-4-2	4 kV contact discharges 8 kV air discharges
Radiated RF immunity IEC 61000-4-3	10V/m with 1 kHz sine wave 80% AM from 80...1000 MHz 3V/m with 1 kHz sine wave 80% AM from 1400...6000 MHz
EFT/B immunity IEC 61000-4-4	±1 kV at 5 kHz on Ethernet ports
Surge transient immunity IEC 61000-4-5	±1 kV line-earth (CM) on Ethernet ports
Conducted RF immunity IEC 61000-4-6	10V rms with 1 kHz sine wave 80% AM from 150 kHz...80 MHz

Certifications

Certification[1]	1756-CMEE1Y1
cULus	UL Listed Industrial Control Equipment, certified for US and Canada.
CE	European Union 2014/30/EU EMC Directive, compliant with: • EN 61326-1; Meas./Control/Lab., Industrial Requirements • EN 61000-6-2; Industrial Immunity • EN 61000-6-4; Industrial Emissions • EN 61131-2; Programmable Controllers (Clause 8, Zone A & B) European Union 2014/35/EU LVD, compliant with EN 61131-2; Programmable Controllers (Clause 11)
RCM	Australian Radiocommunications Act, compliant with EN 61000-6-4; Industrial Emissions
KC	Korean Registration of Broadcasting and Communications Equipment, compliant with Article 58-2 of Radio Waves Act, Clause 3
UKCA	In conformity with the following UK Statutory Instruments and their amendments: • 2016 No. 1091, Electromagnetic Compatibility Regulations • 2016 No. 1101, Electrical Equipment (Safety) Regulations • 2016 No. 1107, Equipment and Protective Systems Intended for Use in Potentially Explosive Atmospheres Regulations • 2012 No. 3032, Restriction of the Use of Certain Hazardous Substances in Electrical and Electronic Equipment
Morocco	In conformity with the following regulations: • Arrêté ministériel n° 6404-15 du 1 er muharram 1437 (15 octobre 2015) Équipements électriques destinés à être utilisés sous certaines limites de tension • Arrêté ministériel n° 6404-15 du 29 ramadan 1436 (16 juillet 2015) Compatibilité électromagnétique des équipements
EtherNet/IP	ODVA conformance tested to EtherNet/IP specifications.

(1) When product is marked. See the Product Certification link at rok.auto/certifications for Declarations of Conformity, Certificates, and other certification details.

microSD Card

The ControlLogix Embedded Edge Compute module has a microSD card that is installed on the rear of the module. You can purchase replacement cards separately.

Technical Specifications - 1784 Memory Cards[1]

Cat. No.	Description
1784-MSDHC32	32 GB microSD card

(1) To help reduce the chance of corruption when you use a microSD card with the Embedded Edge Compute module, Rockwell Automation recommends that you only use the catalog number in this table.

1756-CMS1B1, 1756-CMS1C1, 1756-CMS1D1, 1756-CMS1H1

The 1756-CMS1B1, 1756-CMS1C1, 1756-CMS1D1, and 1756-CMS1H1 ControlLogix Compute modules are chassis-based modules that let you communicate directly with a ControlLogix 5550, 5560, 5570 or 5580 controller via the system backplane and over a network. Compute modules offer an embedded Microsoft Windows® 10 or Linux operating system within which you can create custom applications while utilizing an application programming interface (API).

Technical Specifications

Attribute	1756-CMS1B1	1756-CMS1C1	1756-CMS1D1	1756-CMS1H1
Solid state drive (SSD) capacity	32 GB			
Embedded operating system	Windows 10 IoT Enterprise 64 bit	Linux Debian 32 bit	Linux Debian 64 bit	Linux Red Hat 64 bit
Onboard memory	4 GB			
Voltage and current ratings	5.1V DC @ 1.40 A			
Power consumption	7 W			
Power dissipation, max	7 W			
Thermal dissipation	23.88 BTU/hr			
Replacement battery	Panasonic Type BR1225A coin type lithium battery - Commercially available			
Weight, approx	0.394 kg (0.868 lb)			
Slot width	1			
Module location	ControlLogix chassis, any slot			
Chassis	1756-A4, 1756-A7, 1756-A10, 1756-A13, 1756-A17 Series B, Series C			
Wire size	Ethernet connections Ethernet cabling and installation according to IEC 61918 and IEC 61784-5-2			
Wiring category(1)	Category 3, USB port			
	Category 2, Ethernet ports			
Temperature code	T5			
Enclosure type rating	None (open-style)			

(1) Use this Conductor Category information for planning conductor routing. See Industrial Automation Wiring and Grounding Guidelines, publication 1770-4.1.

Environmental Specifications

Attribute	1756-CMS1B1, 1756-CMS1C1, 1756-CMS1D1, 1756-CMS1H1
Temperature, operating IEC 60068-2-1 (Test Ae, Operating Cold), IEC 60068-2-2 (Test Be, Operating Dry Heat), IEC 60068-2-14 (Test Nb, Operating Thermal Shock)	Series C Chassis: -25 °C < Ta < +60 °C (-13 °F < Ta < +140 °F) Series B Chassis: -25 °C < Ta < +50 °C (-13 °F < Ta < +122 °F)
Temperature, nonoperating IEC 60068-2-1 (Test Ab, Unpackaged Nonoperating Cold), IEC 60068-2-2 (Test Bb, Unpackaged Nonoperating Dry Heat), IEC 60068-2-14 (Test Na, Unpackaged Nonoperating Thermal Shock)	-40...+85 °C (-40...+185 °F)
Relative humidity IEC 60068-2-30 (Test Db, Unpackaged Damp Heat)	5...95% noncondensing
Vibration IEC 60068-2-6 (Test Fc, Operating)	2 g @ 10...500 Hz
Shock, operating IEC 60068-2-27 (Test Ea, Unpackaged Shock)	30 g
Shock, nonoperating IEC 60068-2-27 (Test Ea, Unpackaged Shock)	30 g
Emissions	IEC 61000-6-4
ESD immunity IEC 61000-4-2	4 kV contact discharges 8 kV air discharges
Radiated RF immunity IEC 61000-4-3	10V/m with 1 kHz sine wave 80% AM from 80...2000 MHz 10V/m with 1 kHz sine wave 80% AM from 2000...2700 MHz
EFT/B immunity IEC 61000-4-4	±2 kV at 5 kHz on Ethernet ports
Surge transient immunity IEC 61000-4-5	±2 kV line-earth (CM) on Ethernet ports
Conducted RF immunity IEC 61000-4-6	10V rms with 1 kHz sine wave 80% AM from 150 kHz...80 MHz

Certifications

Certification[1]	1756-CMS1B1, 1756-CMS1C1, 1756-CMS1D1, 1756-CMS1H1
cULus	UL Listed for Class I, Division 2 Group A, B, C, D Hazardous Locations, certified for U.S. and Canada. See UL File E194810
CE	European Union 2014/30/EU EMC Directive, compliant with: • EN 61326-1; Meas./Control/Lab., Industrial Requirements • EN 61000-6-2; Industrial Immunity • EN 61000-6-4; Industrial Emissions European Union 2011/65/EU RoHS, compliant with EN 63000; Technical documentation
RCM	Australian Radiocommunications Act, compliant with EN 61000-6-4; Industrial Emissions
KC	Korean Registration of Broadcasting and Communications Equipment, compliant with Article 58-2 of Radio Waves Act, Clause 3
Morocco	In conformity with the following regulations: • Arrêté ministériel n° 6404-15 du 1 er muharram 1437 (15 octobre 2015) Équipements électriques destinés à être utilisés sous certaines limites de tension • Arrêté ministériel n° 6404-15 du 29 ramadan 1436 (16 juillet 2015) Compatibilité électromagnétique des équipements
UKCA	In conformity with the following UK Statutory Instruments and their amendments: • 2016 No. 1091, Electromagnetic Compatibility Regulations • 2012 No. 3032, Restriction of the Use of Certain Hazardous Substances in Electrical and Electronic Equipment Regulations

(1) When product is marked. See the Product Certification link at rok.auto/certifications for Declarations of Conformity, Certificates, and other certification details.

1756-CFM, 1756-CFMK

ControlLogix configurable flowmeter module

1756-CFM Standard Magnetic Pickup

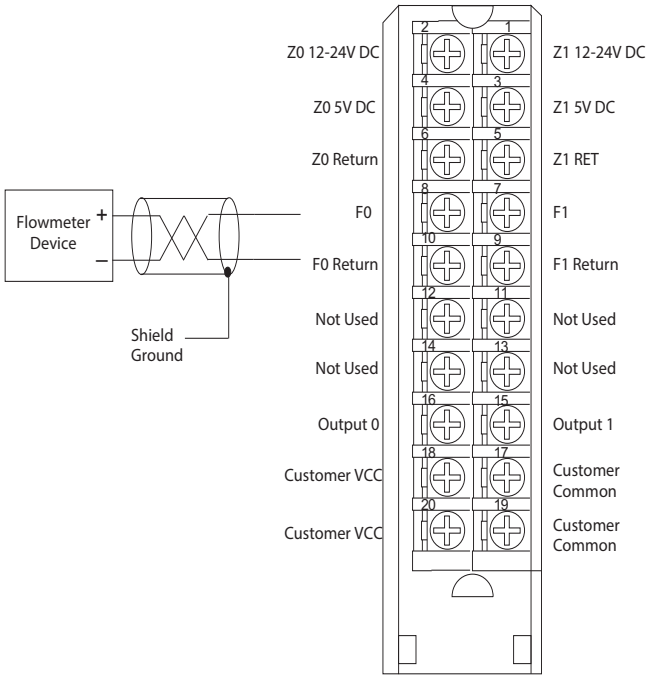

1. This wiring diagram can be used in applications with 50 mV (magnetic pickup), 1.3V (TTL), or 4V (preamp level) thresholds. You must use the Studio 5000 Logix Designer® application to choose the appropriate threshold level for your specific application.
2. If separate power sources are used, do not exceed the specified isolation voltage.

1756-CFM Standard Output

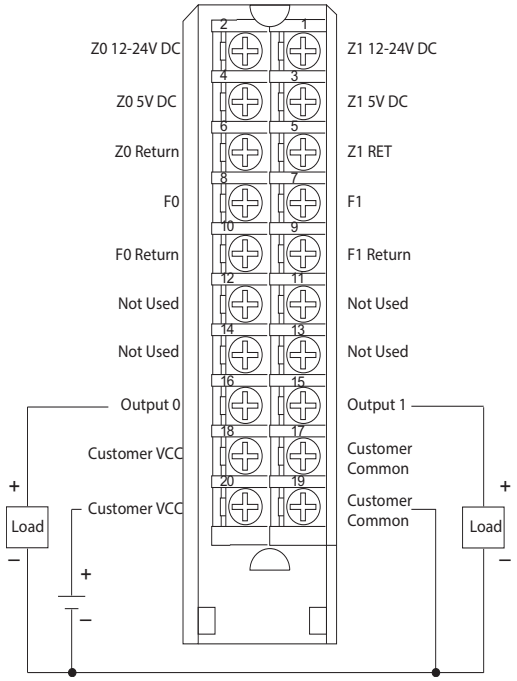

If separate power sources are used, do not exceed the specified isolation voltage.

The 1756-CFM and 1756-CFMK modules provide Totalizer mode for metering applications, or high-speed frequency measurements for speed or rate control applications, on two channels connected to flowmeters.

1756-CFM Standard Prover/Detector Example 1

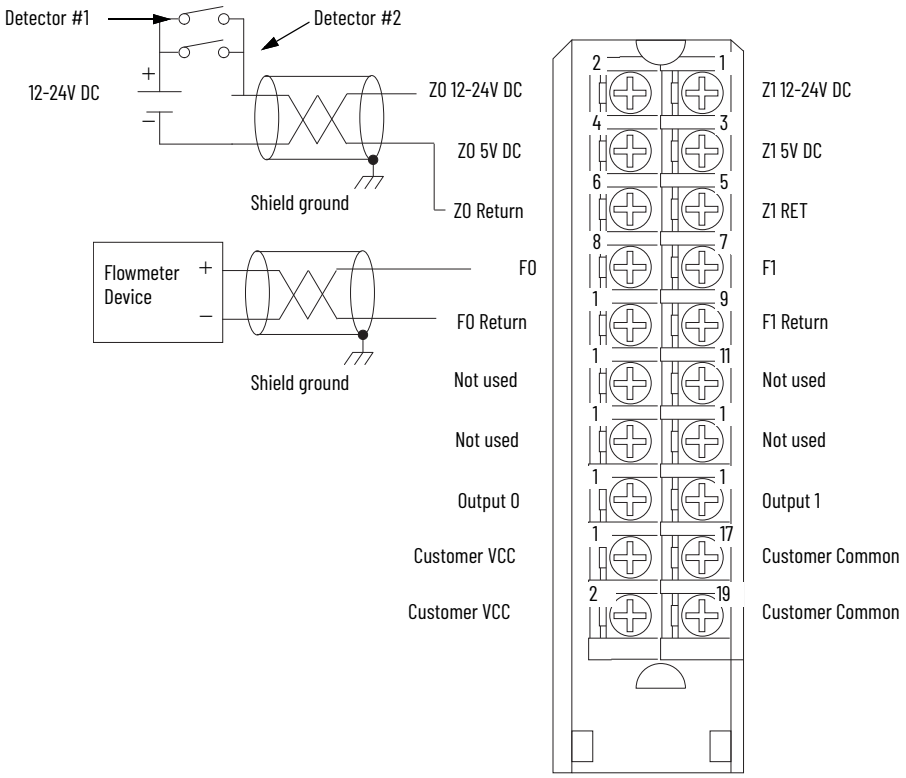

- Detectors #1 and #2 must be wired in parallel.
- Customer VCC can be used to power detectors. In this case, though, the maximum current on the wiring arm must be less than 4 A.
- The wiring example above shows a 12-24V DC standard prover connected to the module.
  If you use a 5V DC standard prover, make sure the positive wire is connected to the 5V terminal (for example, Z0 5V DC).
- If separate power sources are used, do not exceed the specified isolation voltage.

1756-CFM Standard Prover/Detector Example 2

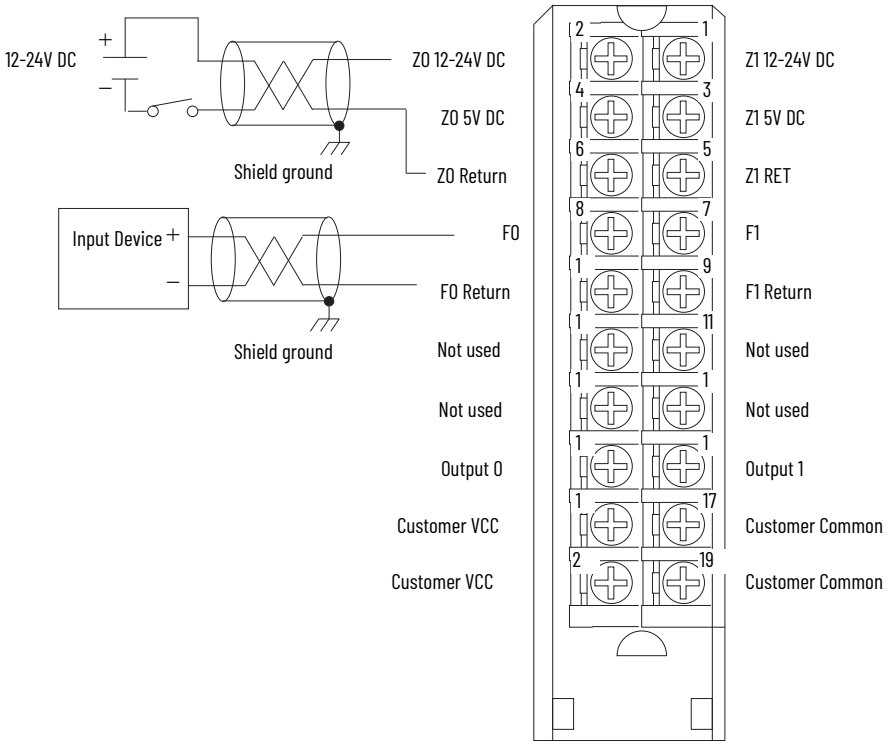

- Customer VCC can be used to power detectors. In this case, though, the maximum current on the wiring arm must be less than 4 A.
- The wiring example above shows a 12-24V DC standard prover connected to the module.
  If you use a 5V DC standard prover, make sure the positive wire is connected to the 5V terminal (for example, Z0 5V DC).
- If separate power sources are used, do not exceed the specified isolation voltage.

Series A Modules

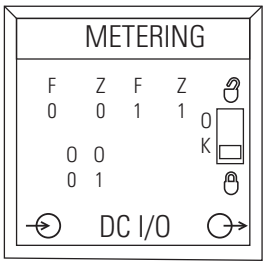

Series B and Later Modules

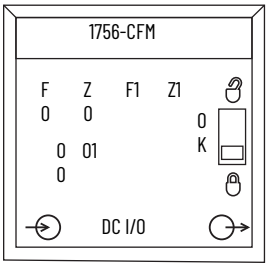

Technical Specifications

Attribute	1756-CFM/A, 1756-CFMK/A	1756-CFM/B, 1756-CFMK/B
Inputs	4 (2 per channel)	
Inputs per channel	2 flowmeter (F) inputs used for all modes 2 gate inputs used in Totalizer mode for prover/store count	
Outputs	2 current sourcing	
Backplane current draw at 5.1V	300 mA	
Backplane current draw at 24V	16 mA	25 mA
Total backplane power	1.7 W	2.13 W
Power dissipation, max	6 W @ 60 °C (140 °F)	3.12 W @ 60 °C (140 °F)
Thermal dissipation	20.4 BTU/hr	10.6 BTU/hr
Isolation voltage	250V (continuous), reinforced insulation type, I/O to backplane 250V (continuous), basic insulation type, I/O group to group Compliant and tested according to IEC/UL 61010-1	
Module keying	Electronic, software configurable	
Removable terminal block	1756-TBNH 1756-TBSH	
Screw torque	0.5 N•m (4.4 lb•in)	
RTB keying	User-defined mechanical	
Slot width	1	
Wire category	2 on signal ports 1 on power ports(1)	
Wire size	1756-TBNH Single wire connection: 0.33...2.1 mm^2 (22...14 AWG) solid or stranded shielded copper wire that is rated at 105 °C (221 °F), or greater, 1.2 mm (3/64 in.) insulation max Double wire connection: 0.33...1.3 mm^2 (22...16 AWG) solid or stranded copper wire that is rated at 105 °C (221 °F), or greater, 1.2 mm (3/64 in.) insulation max 1756-TBSH Single wire connection: 0.33...2.1 mm^2 (22...14 AWG) solid or stranded shielded copper wire that is rated at 105 °C (221 °F), or greater, 1.2 mm (3/64 in.) insulation max	
Enclosure type	None (open-style)	
North American temperature code	T4	
Totalizer fill and prover	Yes	
High resolution, max	100 kHz	
Frequency	0.0005 Hz resolution	
Reverse polarity protection	Outputs only	

(1) Use this conductor category information for planning conductor routing as described in the system-level installation manual. See the Industrial Automation Wiring and Grounding Guidelines, publication 1770-4.1.

Input Specifications

Attributes	1756-CFM, 1756-CFMK(1)
Inputs	4 (2 per channel)
Inputs per channel	Two flowmeter (F) inputs used for all modes Two gate inputs that are used in Totalizer mode for prover/store count
Count range, max	2, 147, 483, 647
Input frequency, max	100 kHz @ flowmeter inputs (overrange occurs at 100 kHz)
Operating voltage range, inputs	±30V, selectable input thresholds of 50 mV, 1.3V, and 4V: ±30V peak unterminated open circuit voltage, magnetic pickup TTL compatible, input voltage >1.3V DC is Logic 1 and -0.7...1.3V DC is Logic 0 12...24V DC powered preamp output, 4V DC threshold
Flowmeter input impedance	5 k Ω ±30% resistive
Filtering (inputs F0 & F1)	Firmware selectable: High-speed 100 kHz or low-pass filter for frequencies < 70 Hz
Gate input voltage range	5V operation: 4.5...5.5V DC 12/24V operation: 10...26.4V DC
Gate input on-state current, min	4 mA
Gate input on-state current, nom	15 mA
Mechanical filter debouncing (Z0 & Z1 Inputs)	Software selectable
Input sampling period	User selectable

(1) These specifications apply to Series A and Series B modules.

Output Specifications

Attribute	1756-CFM/A, 1756-CFMK/A	1756-CFM/B, 1756-CFMK/B
Outputs	2 current sourcing	
Output voltage source	Customer supplied	
Operating voltage range, outputs(1)	5V operation: 4.5...5.5V DC for 3...20 mA load per point 12/24V operation: 10...31.2V DC for 40 mA...1 A load per point	
Output type	IEC 1 A 24V DC	
Output Current per point(1)	1 A @ 10...31.2V DC 20 mA @ 4.5...5.5V DC(2)	
Surge current	2 A for 50 ms, repeatable every 2 s @ 60 °C (140 °F)	2 A for 10 ms, repeatable every 1 s @ 60 °C (140 °F)
Off-state leakage current, max	< 300 µA @ 31.2V DC	
On-state voltage drop, max	0.6 Ω x current	
Output control	Any number of outputs is assignable to either of two flowmeter channels Each output can have 2 "turn-on" and "turn-off" preset values	
Output switching time	< 50 µs turn on, <300 µs turn off Outputs triggered by Total; all other "turn-on" and "turn-off" times <1 ms	
Overload current, max	Electronic 1.2 A per output 2.4 A per module	
Output short circuit protection	Electronic (No indication of fault. Remove overload and toggle output on/off to restore.)	
Output reverse polarity protection	Yes (If wired incorrectly, module outputs can be permanently disabled.)	

(1) UL rating for 24V DC, 24VA.
(2) All outputs can be on simultaneously without derating.

Environmental Specifications

Attribute	1756-CFM/A, 1756-CFMK/A	1756-CFM/B, 1756-CFMK/B
Temperature, operating IEC 60068-2-1 (Test Ae, Operating Cold), IEC 60068-2-2 (Test Be, Operating Dry Heat), IEC 60068-2-14 (Test Nb, Operating Thermal Shock)	0 °C < Ta < 60 °C (32 °F < Ta < 140 °F)	
Temperature, nonoperating IEC 60068-2-1 (Test Ab, Unpackaged Nonoperating Cold), IEC 60068-2-2 (Test Bb, Unpackaged Nonoperating Dry Heat), IEC 60068-2-14 (Test Na, Unpackaged Nonoperating Thermal Shock)	-40...+85 °C (-40...+185 °F)	
Relative humidity IEC 60068-2-30 (Test dB, Unpackaged Damp Heat)	5...95% noncondensing	
Vibration IEC 60068-2-6 (Test Fc, Operating)	2 g @ 10...500 Hz	
Shock, operating IEC 60068-2-27 (Test Ea, Unpackaged Shock)	30 g	
Shock, nonoperating IEC 60068-2-27 (Test Ea, Unpackaged Shock)	30 g	
Emissions	IEC 61000-6-4	
ESD immunity IEC 61000-4-2	6 kV contact discharges 8 kV air discharges	
Radiated RF immunity IEC 61000-4-3	10V/m with 1k Hz sine wave 80% AM from 80...2000 MHz 10V/m with 200 Hz 50% Pulse 100% AM @ 900 MHz 10V/m with 200 Hz 50% Pulse 100% AM @ 1890 MHz 3V/m with 1 kHz sine wave 80% AM from 2000...2700 MHz	
EFT/B immunity IEC 61000-4-4	±4 kV at 5 kHz on unshielded output and power ports ±4 kV at 5 kHz on shielded input ports	±2 kV at 5 kHz and 100 kHz on unshielded output and power ports ±3 kV at 5 kHz and 100 kHz on shielded input ports
Surge transient immunity IEC 61000-4-5	±1 kV line-line (DM) and ±2 kV line-earth (CM) on unshielded output and power ports ±2 kV line-earth (CM) on shielded input ports	
Conducted RF immunity IEC 61000-4-6	10V rms with 1 kHz sine wave 80% AM from 150 kHz...80 MHz on shielded signal ports	

Certifications

Certification[1]	1756-CFM, 1756-CFMK
cULus	UL61010-1 & CAN/CSA C22.2 No. 61010-1-12, Electrical Equipment For Measurement, Control, and Laboratory Use; Part 1: General Requirements. UL61010-2-201 & CAN/CSA-IEC 61010-2-201:14, Safety requirements for electrical equipment for measurement, control, and laboratory use – part 1-201: Particular requirement for control equipment. UL 121201 Nonincendive Electrical Equipment for Use in Class I and II, Division 2 and Class III, Divisions 1 and 2 Hazardous (Classified) Locations CSA C22.2 No. 213-17 Nonincendive electrical equipment for use in Class I and II, Division 2 and Class III, Divisions 1 and 2 hazardous (classified) locations
CE	European Union 2014/30/EU EMC Directive, compliant with: • EN 61326-1; Meas./Control/Lab., Industrial Requirements • EN 61000-6-2; Industrial Immunity • EN 61000-6-4; Industrial Emissions • EN 61131-2; Programmable Controllers (Clause 8, Zone A & B) European Union 2014/35/EU LVD, compliant with EN 61131-2; Programmable Controllers (Clause 11) European Union 2011/65/EU RoHS, compliant with EN 50581; Technical documentation
EX	European Union 2014/34/EU ATEX Directive, compliant with: • EN 60079-0; General Requirements • EN 60079-7; Equipment protection by increased safety "e" • II 3 G Ex ec IIC T4 Gc • DEMKO20ATEX2340X
IECEx	IECEx System, compliant with: • IEC 60079-0; General Requirements • IEC 60079-7; Equipment protection by increased safety "e" • II 3 G Ex ec IIC T4 Gc • IECEx UL 20.0013X
RCM	Australian Radiocommunications Act, compliant with EN 61000-6-4; Industrial Emissions
KC	Korean Registration of Broadcasting and Communications Equipment, compliant with Article 58-2 of Radio Waves Act, Clause 3
Morocco	In conformity with the following regulations: • Arrêté ministériel n° 6404-15 du 1 er muharram 1437 (15 octobre 2015) Équipements électriques destinés à être utilisés sous certaines limites de tension • Arrêté ministériel n° 6404-15 du 29 ramadan 1436 (16 juillet 2015) Compatibilité électromagnétique des équipements
UKCA	In conformity with the following UK Statutory Instruments and their amendments: • 2016 No. 1091, Electromagnetic Compatibility Regulations • 2016 No. 1101, Electrical Equipment (Safety) Regulations • 2016 No. 1107, Equipment and Protective Systems Intended for Use in Potentially Explosive Atmospheres Regulations • 2012 No. 3032, Restriction of the Use of Certain Hazardous Substances in Electrical and Electronic Equipment Regulations
CCC	CCC: 2020122309113668 CNCA-C23-01 强制性产品认证实施规则 防爆电气 CNCA-C23-01 CCC Implementation Rule Explosion-Proof Electrical Products

(1) When product is marked. See the Product Certification link at rok.auto/certifications for Declarations of Conformity, Certificates, and other certification details.

1756-HSC, 1756-HSCK

ControlLogix high-speed counter module

The 1756-HSC and 1756-HSCK modules provide four high-speed, output-switching, on-off windows. The modules use pulses for counting and frequency.

1756-HSC to Allen-Bradley® 845 Incremental Encoder

Application	A1 Connections	B1 Connections	Z1 Connections
Differential Line Driver Output (40 mA)	White - A1 5V DC Black of white - A1 Return	Blue - B1 5V DC Black of blue - B1 Return	Green - Z1 5V DC Black of green - Z1 Return

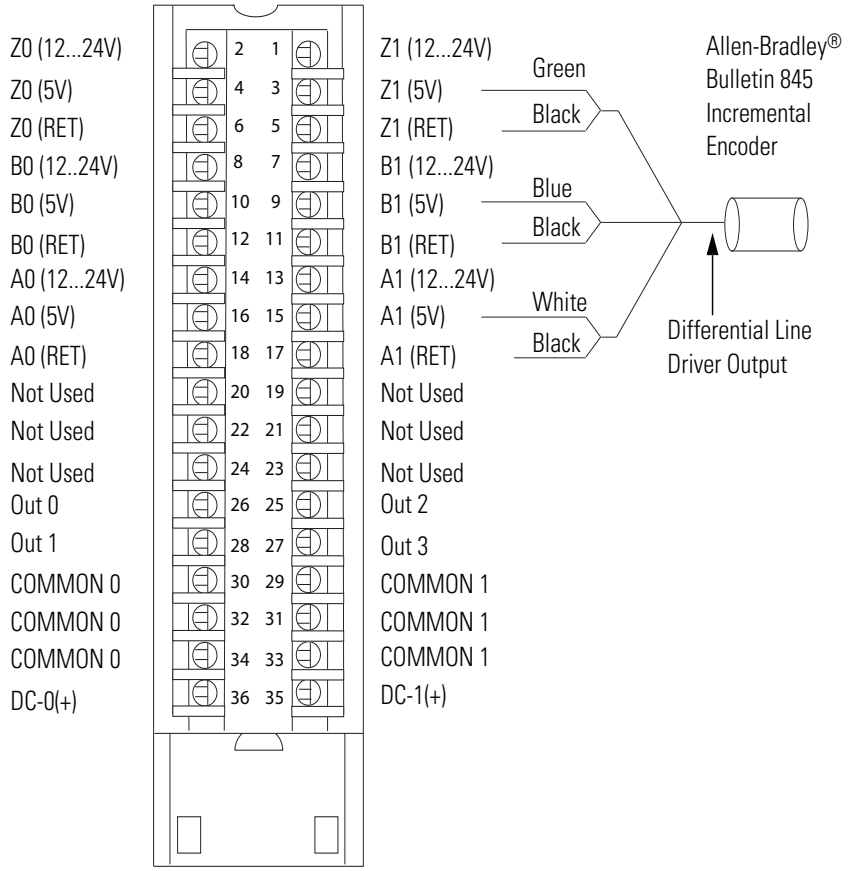

1756-HSC to Allen-Bradley® 872 3-Wire DC Proximity Sensor

Application	A0 Connections	B0 Connections	Z0 Connections
PNP (Sourcing) N.O.	Black - A0 12...24V DC Blue, PS(-)-A0 Return	Jumper B0 12...24V DC to B0 Return	Jumper Z0 12...24V DC to Z0 Return

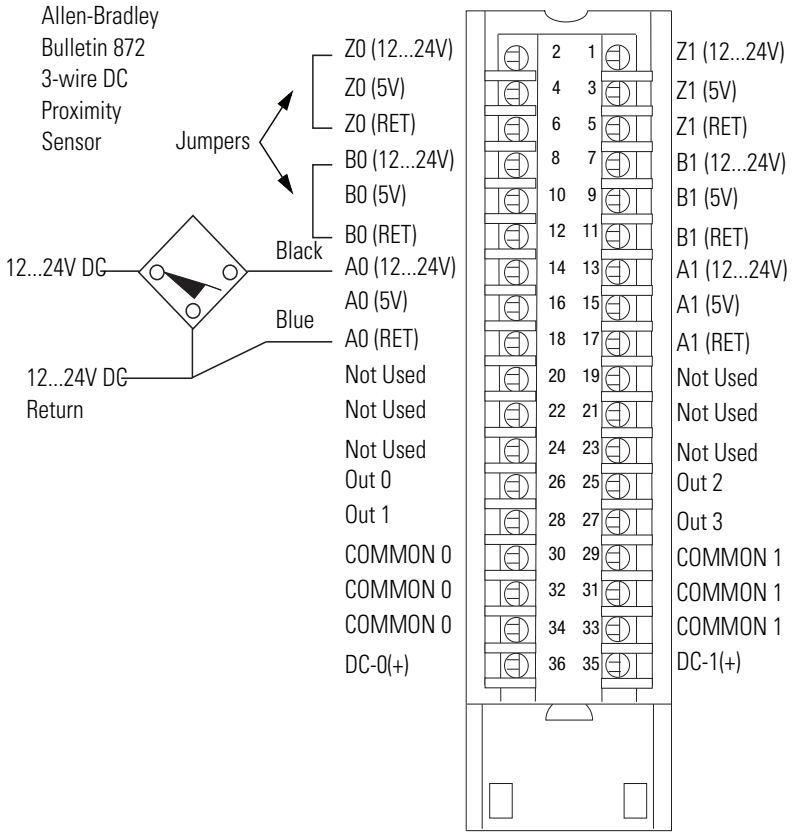

1756-HSC to PHOTOSWITCH® Series 10,000 Photoelectric Sensor

Application	A1 Connections	B1 Connections	Z1 Connections
Any	Black - A1 12...24V DC Blue - A1 Return	Jumper B1 12...24V DC to B1 Return	White - Z1 12...24V DC Blue - Z1 Return

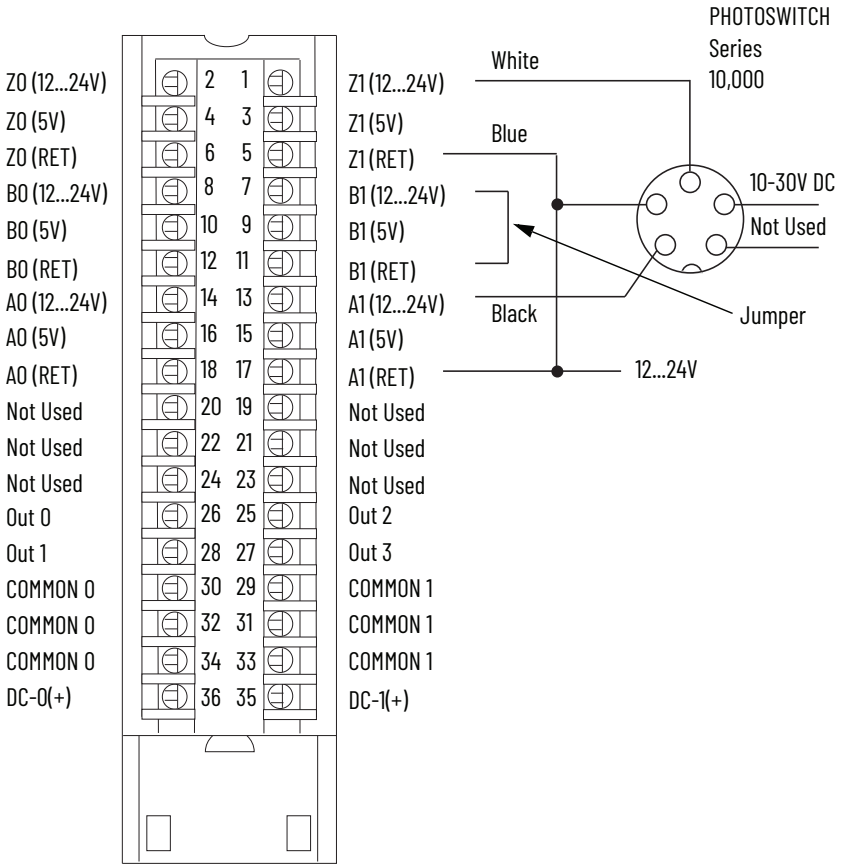

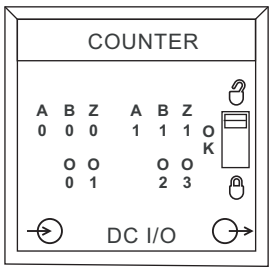

Technical Specifications

Attribute	1756-HSC/A, 1756-HSCK/A, 1756-HSC/B, 1756-HSCK/B	1756-HSC/C, 1756-HSCK/C, 1756-HSC/D, 1756-HSCK/D
Number of counters	2	
Inputs per counter	3 (A, B, Z for gate/reset)	
Outputs	4 (2 points/group)	
Operating voltage range, inputs(1)	5V operation: 4.5...5.5V DC 12/24V operation: 10...26.4V DC	
Operating voltage range, outputs(1)	5V operation: 4.5...5.5V DC 12/24V operation: 10...26.4V DC	
Current draw at 5.1V	300 mA	
Current draw at 24V	3 mA	
Total backplane power	1.6 W	
Power dissipation, max	5.6 W @ 60 °C (140 °F)	3.5 W @ 60 °C (140 °F)
Thermal dissipation	19.1 BTU/hr	12 BTU/hr
Isolation voltage	125V (continuous), basic insulation type, input group-to backplane 30V (continuous), basic insulation type, input group-to-input group	250V (continuous), basic insulation type, input group to backplane 125V (continuous), basic insulation type, input group to input group Compliant and tested according to IEC/UL 61010-1
Module keying	Electronic, software configurable	
Removable terminal block	1756-TBCH 1756-TBS6H	
Screw torque	0.5 N•m (4.4 lb•in)	
RTB keying	User-defined mechanical	
Slot width	1	
Wire size	1756-TBCH Single wire connection: 0.33...2.1 mm^2 (22...14 AWG) solid or stranded shielded copper wire that is rated at 105 °C (221 °F), or greater, 1.2 mm (3/64 in.) insulation max Double wire connection: 0.33...1.3 mm^2 (22...16 AWG) solid or stranded copper wire that is rated at 105 °C (221 °F), or greater, 1.2 mm (3/64 in.) insulation max 1756-TBS6H Single wire connection: 0.33...2.1 mm^2 (22...14 AWG) solid or stranded shielded copper wire that is rated at 105 °C (221 °F), or greater, 1.2 mm (3/64 in.) insulation max	
Wire category	2 on signal ports 1 on power ports(2)	
Enclosure type	None (open-style)	
Temperature code	T4	

(1) UL rating is 24V DC.
(2) Use this conductor category information for planning conductor routing as described in the system-level installation manual. See the Industrial Automation Wiring and Grounding Guidelines, publication 1770-4.1.

Input Specifications

Attribute	1756-HSC, 1756-HSCK
Number of counters	2
Inputs per counter	3 (A, B, Z for gate/reset)
Input frequency, max	1 MHz in counter modes (A input) 500 kHz in rate measurement mode (A input) 250 kHz in encoder mode (A/B inputs, X1 or X4) 70 Hz with filter enabled
Count range	0...16, 777, 214
Counting frequency, max	1000 kHz
Input current, min	4 mA
Input current, nom	15 mA

Output Specifications

Attribute	1756-HSC/A, 1756-HSCK/A, 1756-HSC/B, 1756-HSCK/B	1756-HSC/C, 1756-HSCK/C, 1756-HSC/D, 1756-HSCK/D
Outputs	4 (2 per common)	
Output delay time Off to On On to Off	20 µs nom/50 µs max 60 µs nom/300 µs max	
Off-state leakage current per point, max	300 µA	
On-state voltage drop, max	0.55V	
Output current rating, per point(1)	20 mA @ 4.5...5.5V DC 1.0 A @ 10...31.2V DC	
Current limit	< 4 A	
Surge current per point	2 A for 10 ms every 1 s @ 60 °C (140 °F)	
Load current per point, min	5V operation: 3 mA 12/24V operation: 40 mA	
Output control	Up to two outputs are assigned to each counter channel. Each output can have two 'turn-on' and 'turn-off' preset values	
Short circuit protection	Electronic (Remove overload and toggle On/Off to restore.)	
Reverse polarity protection	Yes (If wired incorrectly, module outputs can be permanently disabled.)	
Counter, max	1 MHz	
Rate measurement, max	500 kHz	
Encoder, max	250 kHz	
Debounce filter, max	70 Hz	User configurable to the following: 50 Hz 500 Hz 5 kHz 50 kHz

(1) UL rating is 24V DC, 24VA.

Environmental Specifications

Attribute	1756-HSC/A, 1756-HSCK/A, 1756-HSC/B, 1756-HSCK/B	1756-HSC/C, 1756-HSCK/C, 1756-HSC/D, 1756-HSCK/D
Temperature, operating IEC 60068-2-1 (Test Ae, Operating Cold), IEC 60068-2-2 (Test Be, Operating Dry Heat), IEC 60068-2-14 (Test Nb, Operating Thermal Shock)	0 °C < Ta < 60 °C (32 °F < Ta < 140 °F)	
Temperature, nonoperating IEC 60068-2-1 (Test Ab, Unpackaged Nonoperating Cold), IEC 60068-2-2 (Test Bb, Unpackaged Nonoperating Dry Heat), IEC 60068-2-14 (Test Na, Unpackaged Nonoperating Thermal Shock)	-40...+85 °C (-40...+185 °F)	
Relative humidity IEC 60068-2-30 (Test dB, Unpackaged Damp Heat)	5...95% noncondensing	
Vibration IEC 60068-2-6 (Test Fc, Operating)	2 g @ 10...500 Hz	
Shock, operating IEC 60068-2-27 (Test Ea, Unpackaged Shock)	30 g	
Shock, nonoperating IEC 60068-2-27 (Test Ea, Unpackaged Shock)	30 g	
Emissions	IEC 61000-6-4	
ESD immunity IEC 61000-4-2	6 kV contact discharges 8 kV air discharges	
Radiated RF immunity IEC 61000-4-3	10V/m with 1 kHz sine wave 80% AM from 80...2000 MHz 10V/m with 200 Hz 50% Pulse 100% AM @ 900 MHz 10V/m with 200 Hz 50% Pulse 100% AM @ 1890 MHz 3V/m with 1 kHz sine wave 80% AM from 2000...2700 MHz	
EFT/B immunity IEC 61000-4-4	±4 kV at 5 kHz on power ports ±4 kV at 5 kHz on signal ports	±2 kV at 5 kHz and 100 kHz on power ports ±3 kV at 5 kHz and 100 kHz on signal ports
Surge transient immunity IEC 61000-4-5	±1 kV line-line (DM) and ±2 kV line-earth (CM) on power ports ±1 kV line-line (DM) and ±2 kV line-earth (CM) on signal ports ±2 kV line-earth (CM) on shielded ports	
Conducted RF immunity IEC 61000-4-6	10V rms with 1 kHz sine wave 80% AM from 150 kHz...80 MHz on shielded signal ports	

Certifications

Certification[1]	1756-HSC, 1756-HSCK
cULus	UL61010-1 & CAN/CSA C22.2 No. 61010-1-12, Electrical Equipment For Measurement, Control, and Laboratory Use; Part 1: General Requirements. UL61010-2-201 & CAN/CSA-IEC 61010-2-201:14, Safety requirements for electrical equipment for measurement, control, and laboratory use – part 1-201: Particular requirement for control equipment. UL 121201 Nonincendive Electrical Equipment for Use in Class I and II, Division 2 and Class III, Divisions 1 and 2 Hazardous (Classified) Locations CSA C22.2 No. 213-17 Nonincendive electrical equipment for use in Class I and II, Division 2 and Class III, Divisions 1 and 2 hazardous (classified) locations
CE	European Union 2014/30/EU EMC Directive, compliant with: • EN 61326-1; Meas./Control/Lab., Industrial Requirements • EN 61000-6-2; Industrial Immunity • EN 61000-6-4; Industrial Emissions • EN 61131-2; Programmable Controllers (Clause 8, Zone A & B) European Union 2014/35/EU LVD, compliant with EN 61131-2; Programmable Controllers (Clause 11) European Union 2011/65/EU RoHS, compliant with EN 50581; Technical documentation
RCM	Australian Radiocommunications Act, compliant with EN 61000-6-4; Industrial Emissions
Ex	European Union 2014/34/EU ATEX Directive, compliant with: • EN 60079-0; General Requirements • EN 60079-7; Equipment protection by increased safety "e" • II 3 G Ex ec IIC T4 Gc • DEMKO20ATEX2340X
IECEx	IECEx System, compliant with: • IEC 60079-0; General Requirements • IEC 60079-7; Equipment protection by increased safety "e" • II 3 G Ex ec IIC T4 Gc • IECEx UL 20.0013X
KC	Korean Registration of Broadcasting and Communications Equipment, compliant with Article 58-2 of Radio Waves Act, Clause 3
Morocco	In conformity with the following regulations: • Arrêté ministériel n° 6404-15 du 1 er muharram 1437 (15 octobre 2015) Équipements électriques destinés à être utilisés sous certaines limites de tension • Arrêté ministériel n° 6404-15 du 29 ramadan 1436 (16 juillet 2015) Compatibilité électromagnétique des équipements
UKCA	In conformity with the following UK Statutory Instruments and their amendments: • 2016 No. 1091, Electromagnetic Compatibility Regulations • 2016 No. 1101, Electrical Equipment (Safety) Regulations • 2016 No. 1107, Equipment and Protective Systems Intended for Use in Potentially Explosive Atmospheres Regulations • 2012 No. 3032, Restriction of the Use of Certain Hazardous Substances in Electrical and Electronic Equipment Regulations
CCC	CCC: 2020122309113668 CNCA-C23-01 强制性产品认证实施规则 防爆电气 CNCA-C23-01 CCC Implementation Rule Explosion-Proof Electrical Products

(1) When product is marked. See the Product Certification link at rok.auto/certifications for Declarations of Conformity, Certificates, and other certification details.

1756-LSC8XIB8I, 1756-LSC8XIB8IK

ControlLogix 10...30V low-speed counter module

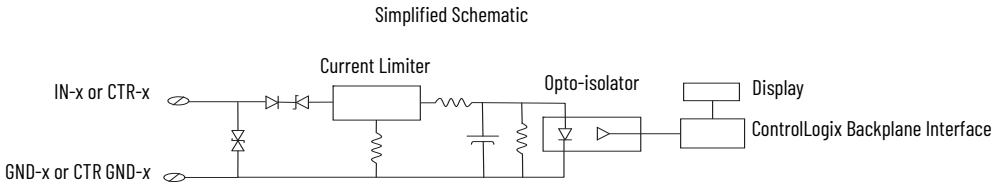

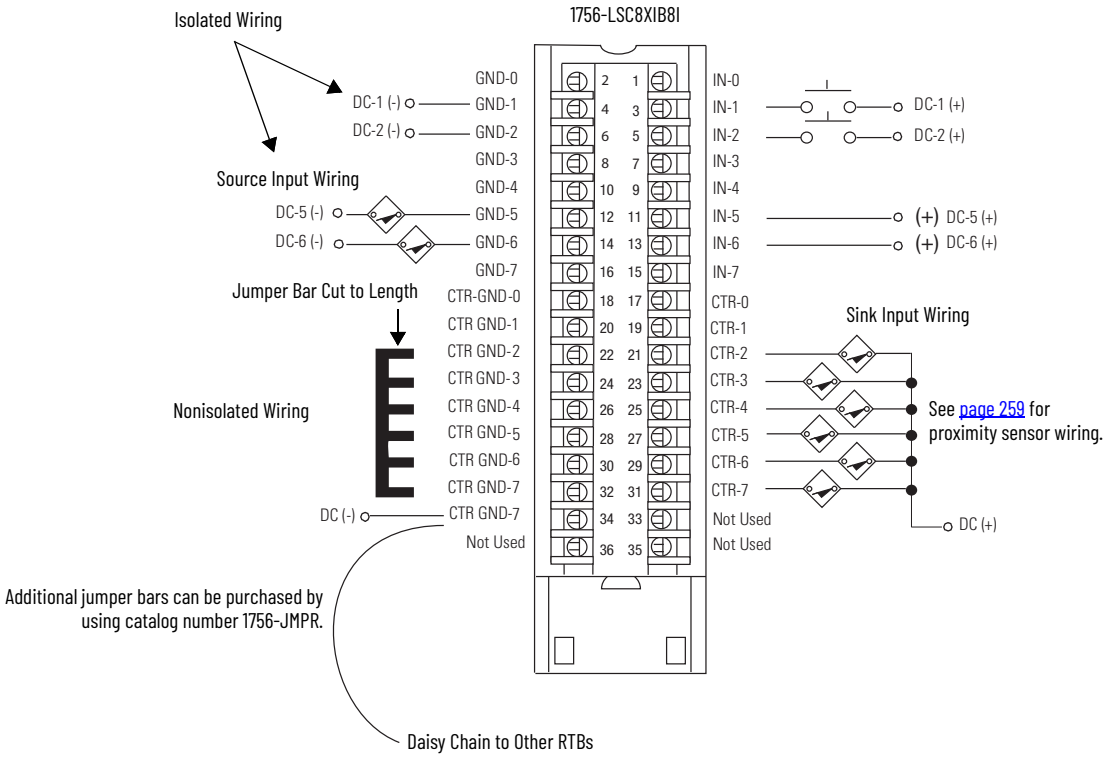

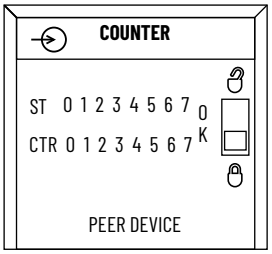

This diagram shows how to wire a proximity sensor to the module's eight counters or eight hardware inputs. Counters use incoming pulses for counts and frequency with two user-configurable On/Off windows per counter. Hardware inputs provide standard input or counter-control functionality.

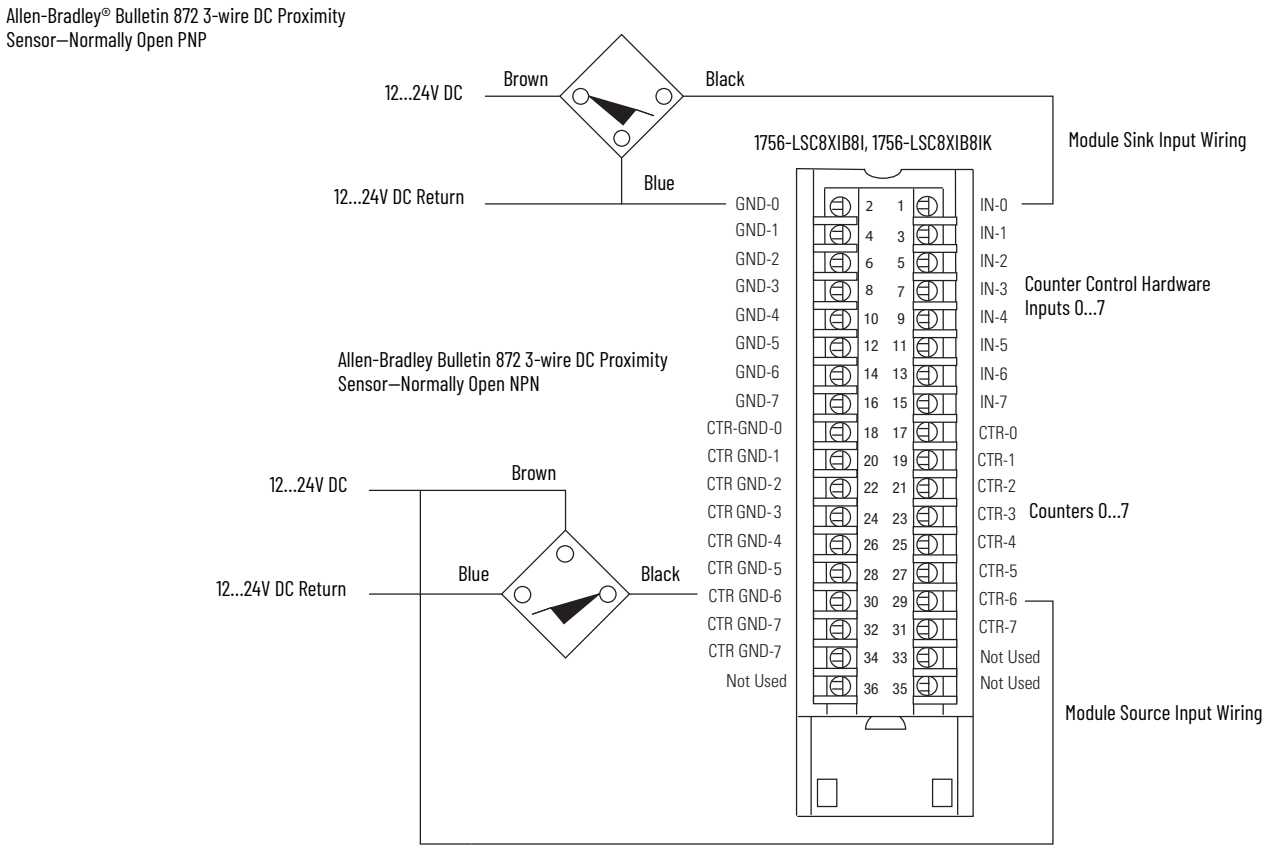

Counter Specifications

Attribute	1756-LSC8XIB8I, 1756-LSC8XIB8IK
Number of counters	8 individually isolated
Counting frequency, max	40 kHz
Count range	0...2,147,483,648 (31-bit counter)
Voltage category	12/24V DC sink/source
Operating voltage range	10...30V DC
Off-state voltage, max	5V
Off-state current, max	1.5 mA
On-state current, min	2 mA @ 10V DC
On-state current, max	5 mA @ 30V DC
Change of state	Enter or exit user-configurable windows

Hardware Input Specifications

Attribute	1756-LSC8XIB8I, 1756-LSC8XIB8IK
Inputs	8 individually isolated, standard input or counter-control functionality
Voltage category	12/24V DC sink/source
Operating voltage range	10...30V DC
Input voltage, nom	24V DC
Input delay time (screw to backplane) Off to On On to Off	 14 µs nom/23 µs max + user-configurable filter time of 0...30,000 µs 14 µs nom/23 µs max + user-configurable filter time of 0...30,000 µs
Off-state voltage, max	5V
Off-state current, max	1.5 mA
On-state current, min	2 mA @ 10V DC
On-state current, max	5 mA @ 30V DC
Change of state	Any transition

Module Specifications

Attribute	1756-LSC8XIB8I, 1756-LSC8XIB8IK
Current draw @ 5.1V	275 mA
Current draw @ 24V	3 mA
Total backplane power	1.47 W
Power dissipation	3.8 W @ 60 °C (140 °F)
Thermal dissipation	12.97 BTU/hr
Input impedance, max	Six k Ω @ 30V DC
Cyclic update time	200 µs...750 ms
Isolation voltage	250V (continuous), reinforced insulation type, inputs-to-backplane 250V (continuous), basic insulation type, input-to-input
Module keying	Electronic, software configurable
Removable terminal block housing	1756-TBCH 1756-TBS6H
RTB keying	User-defined mechanical
Slot width	1
Wire category	1 on signal ports(1)
Enclosure type	None (open-style)
Temperature code	T4
Reverse polarity protection	Yes

(1) Use this conductor category information for planning conductor routing as described in the system-level installation manual. See the Industrial Automation Wiring and Grounding Guidelines, publication 1770-4.1.

Environmental Specifications

Attribute	1756-LSC8XIB8I, 1756-LSC8XIB8IK
Temperature, operating IEC 60068-2-1 (Test Ae, Operating Cold), IEC 60068-2-2 (Test Be, Operating Dry Heat), IEC 60068-2-14 (Test Nb, Operating Thermal Shock)	0...60 °C (32...140 °F)
Temperature, nonoperating IEC 60068-2-1 (Test Ab, Unpackaged Nonoperating Cold), IEC 60068-2-2 (Test Bb, Unpackaged Nonoperating Dry Heat), IEC 60068-2-14 (Test Na, Unpackaged Nonoperating Thermal Shock)	-40...+85 °C (-40...+185 °F)
Relative humidity IEC 60068-2-30 (Test dB, Unpackaged Damp Heat)	5...95% noncondensing
Vibration IEC 60068-2-6 (Test Fc, Operating)	2 g @ 10...500 Hz
Shock, operating IEC 60068-2-27 (Test Ea, Unpackaged Shock)	30 g
Shock, nonoperating IEC 60068-2-27 (Test Ea, Unpackaged Shock)	50 g
Emissions	IEC 61000-6-4
ESD immunity IEC 61000-4-2	6 kV contact discharges 8 kV air discharges
Radiated RF immunity IEC 61000-4-3	10V/m with 1 kHz sine wave 80% AM from 80...2000 MHz 10V/m with 200 Hz 50% Pulse 100% AM @ 900 MHz 10V/m with 200 Hz 50% Pulse 100% AM @ 1890 MHz 3V/m with 1 kHz sine wave 80% AM from 2000...2700 MHz
EFT/B immunity IEC 61000-4-4	±4 kV at 5 kHz on signal ports
Surge transient immunity IEC 61000-4-5	±1 kV line-line (DM) and ±2 kV line-earth (CM) on signal ports
Conducted RF immunity IEC 61000-4-6	10V rms with 1 kHz sine wave 80% AM from 150 kHz...80 MHz

Certifications

Certification[1]	1756-LSC8XIB8I, 1756-LSC8XIB8IK
cULus	UL Listed Industrial Control Equipment, certified for US and Canada. See UL File E65584. UL Listed for Class I, Division 2 Group A,B,C,D Hazardous Locations, certified for U.S. and Canada. See UL File E194810.
CE	European Union 2014/30/EU EMC Directive, compliant with: • EN 61326-1; Meas./Control/Lab., Industrial Requirements • EN 61000-6-2; Industrial Immunity • EN 61000-6-4; Industrial Emissions • EN 61131-2; Programmable Controllers (Clause 8, Zone A & B) European Union 2014/35/EU LVD, compliant with EN 61131-2; Programmable Controllers (Clause 11)
RCM	Australian Radiocommunications Act, compliant with EN 61000-6-4; Industrial Emissions
Ex	European Union 2014/34/EU ATEX Directive, compliant with: • EN IEC 60079-0: Explosive atmospheres - Part 0: Equipment - General requirements • EN IEC 60079-7: Explosive atmospheres – Part 7: Equipment protection by increased safety "e" • II 3 G Ex ec IIC T4 Gc • UL22ATEX2820X
IECEx	IECEx System, compliant with: • IEC 60079-0: Explosive atmospheres - Part 0: Equipment - General requirements • IEC 60079-7: Explosive atmospheres – Part 7: Equipment protection by increased safety "e" • II 3 G Ex ec IIC T4 Gc • IECEx UL 22.0065X
UKex	In conformity with the following UKex Statutory Instruments and their amendments: • Schedule 1 of the UKEX Regulation 2016 No. 1107 • Equipment protection by increased safety "e", reference certificate number UL22UKEX2602X • Zone 2 classification according to UKEX Regulation 2016 No. 1107
UKCA	In conformity with the following UK Statutory Instruments and their amendments: • 2016 No. 1091, Electromagnetic Compatibility Regulations • 2016 No. 1101, Electrical Equipment (Safety) Regulations • 2016 No. 1107, Equipment and Protective Systems Intended for Use in Potentially Explosive Atmospheres Regulations • 2012 No. 3032, Restriction of the Use of Certain Hazardous Substances in Electrical and Electronic Equipment
KC	Korean Registration of Broadcasting and Communications Equipment, compliant with Article 58-2 of Radio Waves Act, Clause 3
CCC	CCC 2020122309111998 CNCA-C23-01 强制性产品认证实施规则 防爆电气 CNCA-C23-01 CCC Implementation Rule Explosion-Proof Electrical Products

(1) When product is marked. See the Product Certification link at rok.auto/certifications for Declarations of Conformity, Certificates, and other certification details.

1756-PLS

ControlLogix programmable limit switch module

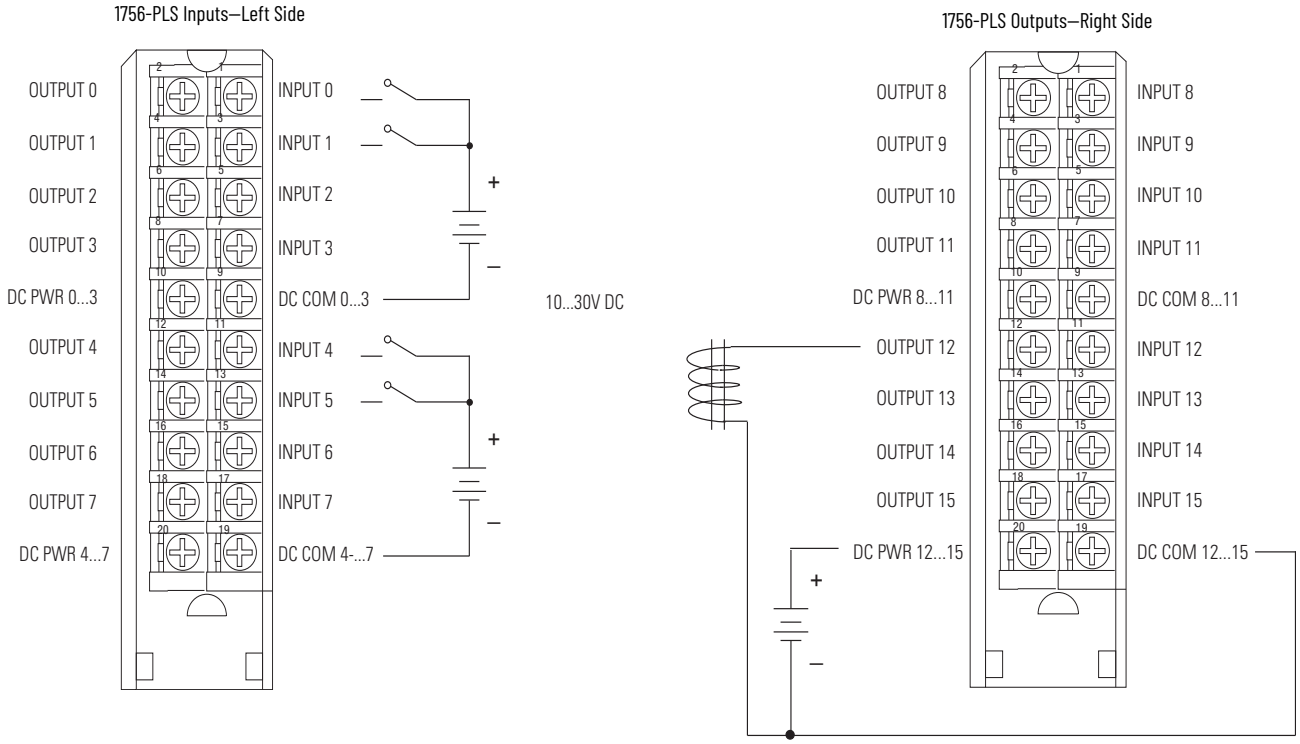

The 1756-PLS module supports enhanced packaging applications. The module requires three contiguous slots in the chassis.

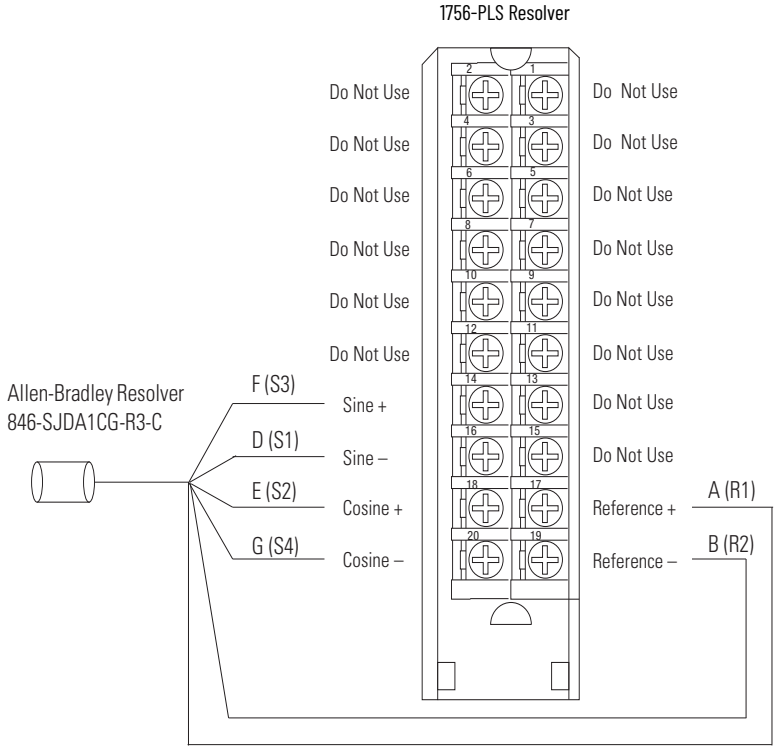

Indicator for Left Slot I/O Module

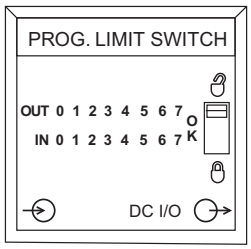

Indicator for Left Resolver Module

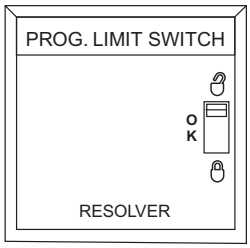

Indicator for Right Slot I/O Module

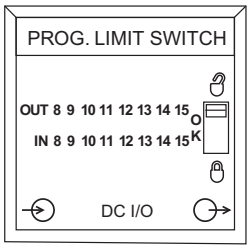

Technical Specifications

Attribute	1756-PLS
Module configuration	Left section: Two groups of four outputs and four inputs each Center section: resolver interface and I/O control Right section: Two groups of four outputs and four inputs each
Current draw at 5.1V	1 A
Current draw at 24V	125 mA
Total backplane power	8.1 W
Power dissipation, nom	22.62 W @ 30 °C (86 °F) 18.22 W @ 60 °C (140 °F)
Power dissipation, max	25.7 W @ 30 °C (86 °F) 21.3 W @ 60 °C (140 °F)
Thermal dissipation, nom	77.23 BTU/hr @ 30 °C (86 °F) 62.2 BTU/hr @ 60 °C (140 °F)
Thermal dissipation, max	87.74 BTU/hr @ 30 °C (86 °F) 72.72 BTU/hr @ 60 °C (140 °F)
Isolation voltage	250V (continuous), basic insulation type, I/O-to-backplane, I/O group-to-group, resolver-to-backplane, and resolver-to-I/O
Removable terminal block	Requires 3 RTBs: 1756-TBNH or 1756-TBSH
RTB keying	User-defined mechanical
Slot width	3
Wire category	2 on signal ports 1 on power ports(1)
Enclosure type	None (open style)
Temperature code	T4

(1) Use this conductor category information for planning conductor routing as described in the system-level installation manual. See the Industrial Automation Wiring and Grounding Guidelines, publication 1770-4.1.

Resolver Specifications

Attribute	1756-PLS
Resolver location	Center section
Compatible resolver	Allen-Bradley resolver 846-SJ*xxxx*-R3-*x* (*x* = customer options)
Resolver interface	2V rms, reference output (differential pair) 2V rms, sine, and cosine inputs (two differential pairs)
Reference voltage	2V rms ±20%
Reference frequency	5 kHz ±20%
Digital resolution	12 bits (4096 counts from hardware)
Angular resolution	0.088°/bit
Digital count range	0...4095 (decimal)
Maximum tracking rate	±1800 RPM
Repeatability	±0.0488% of full scale
Accuracy	±0.0976% of full scale

Input Specifications

Attribute	1756-PLS
Inputs	16 (2 groups of 4 per I/O section)
Voltage category	12/24V DC
Operating voltage range[1]	10.8...31.2V DC
Input delay time (screw to backplane) Off to On On to Off	 < 15 µs @ 30 °C (86 °F) < 150 µs @ 60 °C (140 °F) < 30 µs @ 30 °C (86 °F) < 200 µs @ 60 °C (140 °F)
Power dissipation, inputs, nom	1.86 W @ 60 °C (140 °F)
Power dissipation, inputs, max	2.8 W @ 60 °C (140 °F)
Thermal dissipation, inputs, nom	6.35 BTU/hr
Thermal dissipation, inputs, max	9.56 BTU/hr
On-state voltage, min	10V DC
On-state voltage, nom	10.8...26.4V DC
On-state voltage, max	31.2V DC
Off-state voltage, max	5V DC
Off-state current, max	1.5 mA
On-state current, min	3 mA
On-state current, max	10 mA
Input impedance, max	3.3 kΩ @ 24V DC
Reverse polarity protection	Yes

(1) UL certification for 24V DC nominal. Rockwell Automation specified to 10.8...31.2V DC.

Output Specifications

Attribute	1756-PLS
Outputs	16 (2 groups of 4 per I/O section)
Voltage category	12/24V DC
Operating voltage range(1)	10...31.2V DC
Output delay time Off to On On to Off	 < 15 µs @ 60 °C (140 °F) < 25 µs @ 60 °C (140 °F)
Power dissipation, outputs, nom	5.4 W @ 30 °C (86 °F) 3.2 W @ 60 °C (140 °F)
Power dissipation, outputs, max	6 W @ 30 °C (86 °F) 3.8 W @ 60 °C (140 °F)
Thermal dissipation, outputs, nom	18.43 BTU/hr @ 30 °C (86 °F) 10.93 BTU/hr @ 60 °C (140 °F)
Thermal dissipation, outputs, max	21.48 BTU/hr @ 30 °C (86 °F) 11.93 BTU/hr @ 60 °C (140 °F)
Output power dissipation/slot thermal dissipation	3.2 W @ 60 °C (140 °F) 10.93 BTU/hr @ 60 °C (140 °F)
Off-state leakage current per point, nom	<10 µA @ 60 °C (140 °F)
Off-state leakage current per point, max	300 mA @ 60 °C (140 °F)
On-state voltage, min	10V DC
On-state voltage, nom	10.8...26.4V DC
On-state voltage, max	31.2V DC
Output voltage drop, max	0.55V DC
Current per point, max	1 A @ 30 °C(2) (86 °F)
Current per group, max	4 A @ 30 °C(3) (86 °F)
Current per module, max	8 A @ 30 °C(4) (86 °F)
Current limit	< 4 A
Surge current per point	2 A for 10 ms every 1 s @ 60 °C (140 °F)
Load current per point, min	40 mA
Output switching time	Switching 1 A @ 24V DC
Short circuit protection	Electronic (No indication of fault. Remove load and toggle on/off to restore.)
Reverse polarity protection	Yes, current limited. (If wired incorrectly, outputs can be permanently disabled.)

(1) UL certification for 24V DC nominal. Rockwell Automation specified to 10.8...31.2V DC.
(2) Derate 16.7 mA/ °C above 30 °C (86 °F): 0.5 A @ 60 °C (140 °F).
(3) Derate 66.8 mA/ °C above 30 °C (86 °F): 2 A @ 60 °C (140 °F).
(4) Derate 133.6 mA/ °C above 30 °C (86 °F): 4 A @ 60 °C (140 °F).

Environmental Specifications

Attribute	1756-PLS
Temperature, operating IEC 60068-2-1 (Test Ae, Operating Cold), IEC 60068-2-2 (Test Be, Operating Dry Heat), IEC 60068-2-14 (Test Nb, Operating Thermal Shock)	0...60 °C (32...140 °F)
Temperature, nonoperating IEC 60068-2-1 (Test Ab, Unpackaged Nonoperating Cold), IEC 60068-2-2 (Test Bb, Unpackaged Nonoperating Dry Heat), IEC 60068-2-14 (Test Na, Unpackaged Nonoperating Thermal Shock)	-40...+85 °C (-40...+185 °F)
Relative humidity IEC 60068-2-30 (Test dB, Unpackaged Damp Heat)	5...95% noncondensing
Vibration IEC 60068-2-6 (Test Fc, Operating)	2 g @ 10...500 Hz
Shock, operating IEC 60068-2-27 (Test Ea, Unpackaged Shock)	30 g
Shock, nonoperating IEC 60068-2-27 (Test Ea, Unpackaged Shock)	50 g
Emissions	IEC 61000-6-4
ESD immunity IEC 61000-4-2	6 kV contact discharges 8 kV air discharges
Radiated RF immunity IEC 61000-4-3	10V/m with 1 kHz sine wave 80% AM from 80...2000 MHz 10V/m with 200 Hz 50% Pulse 100% AM @ 900 MHz 10V/m with 200 Hz 50% Pulse 100% AM @ 1890 MHz 3V/m with 1 kHz sine wave 80% AM from 2000...2700 MHz
EFT/B immunity IEC 61000-4-4	±4 kV at 5 kHz on unshielded I/O and power ports ±2 kV at 5 kHz on shielded resolver ports
Surge transient immunity IEC 61000-4-5	±1 kV line-line (DM) and ±2 kV line-earth (CM) on unshielded I/O and power ports ±2 kV line-earth (CM) on shielded resolver ports
Conducted RF immunity IEC 61000-4-6	10V rms with 1 kHz sine wave 80% AM from 150 kHz...80 MHz on shielded signal ports

Certifications

Certification(1)	1756-PLS
cULus	UL Listed Industrial Control Equipment, certified for US and Canada. See UL File E65584. UL Listed for Class I, Division 2 Group A,B,C,D Hazardous Locations, certified for U.S. and Canada. See UL File E194810.
CE	European Union 2014/30/EU EMC Directive, compliant with: • EN 61326-1; Meas./Control/Lab., Industrial Requirements • EN 61000-6-2; Industrial Immunity • EN 61000-6-4; Industrial Emissions • EN 61131-2; Programmable Controllers (Clause 8, Zone A & B) European Union 2014/35/EU LVD, compliant with EN 61131-2; Programmable Controllers (Clause 11)
RCM	Australian Radiocommunications Act, compliant with EN 61000-6-4; Industrial Emissions
Ex	European Union 2014/34/EU ATEX Directive, compliant with: • EN 60079-15; Potentially Explosive Atmospheres, Protection "n" • EN 60079-0; General Requirements II 3 G Ex nA IIC T4 X Gc

(1) When product is marked. See the Product Certification link at rok.auto/certifications for Declarations of Conformity, Certificates, and other certification details.

Notes:

Chassis and Power Supply

1756 ControlLogix I/O modules must be mounted in a ControlLogix chassis. Modules can be mounted in any chassis slot. Each chassis requires a power supply.

Product	Cat. No.
Chassis	1756-A4, 1756-A7, 1756-A10, 1756-A13, 1756-A17, 1756-A4K, 1756-A7K, 1756-A10K, 1756-A13K, 1756-A17K, 1756-A7XT, 1756-A10XT, 1756-A7ZXT, 1756-A10ZXT
Power supply, standard	1756-PA50, 1756-PA50K, 1756-PA72, 1756-PA72K, 1756-PA75, 1756-PA75K, 1756-PB50, 1756-PB50K, 1756-PB72, 1756-PB72K, 1756-PB75, 1756-PB75K, 1756-PC75, 1756-PH75, 1756-PH75K, 1756-PAXT, 1756-PBXT, 1756-PA30XT, 1756-PB30XT
Power supply, redundant	1756-PA75R, 1756-PB75R, 1756-PSCA2, 1756-PBXTR, 1756-PSCA2XT, 1756-PAXTR, 1756-PA75RK, 1756-PB75RK, 1756-PSCA2K 1756-CPR2, 1756-CPR2D, or 1756-CPR2U cable

- For more information on chassis specifications, see ControlLogix Chassis Specifications Technical Data, publication 1756-TD006.
- For more power supply specifications, see ControlLogix Power Supply Specifications Technical Data, publication 1756-TD005.
- For more information on how to choose the right power supply for your application, the Integrated Architecture® Builder (IAB) software from Rockwell Automation provides advanced selection assistance and a graphical interface for designing systems.

1756 Removable Terminal Blocks

Removable terminal blocks (RTBs) provide a flexible interconnection between your plant wiring and 1756 ControlLogix I/O modules. The RTB plugs into the front of the I/O module. The type of module determines which RTB you need. You can choose screw-clamp or spring-clamp RTBs.

RTBs are not shipped with I/O modules. You must order them separately. The standard housing on the front of the wiring arm is not deep enough for 2.5 mm^2 (14 AWG) wiring. So, if you plan to use 2.5 mm^2 (14 AWG) wiring, order the extended housing.

ATTENTION: If separate power sources are used, do not exceed the specified isolation voltage. See the specifications for each individual module on the preceding pages.

WARNING: Do not use 1756-TBNHS, 1756-TBSHS, 1756-TBCHS, or 1756-TBS6HS safety RTBs and 1756-TBES extended-depth terminal block housings with non-safety I/O modules.

RTB Specifications

Attribute	1756-TBCH 1756-TBCHS 1756-TBCHXT	1756-TBNH 1756-TBNHS 1756-TBNHXT	1756-TBSH 1756-TBSHS 1756-TBSHXT	1756-TBS6H 1756-TBS6HS 1756-TBS6HXT	1756-TBE 1756-TBES 1756-TBEXT
Description	36-pin cage-clamp removable terminal block with standard housing	20-position NEMA screw-clamp removable block	20-pin spring-clamp removable terminal block with standard housing	36-pin spring-clamp removable terminal block with standard housing	Extended depth terminal block housing
Screw torque	0.5 N•m (4.4 lb•in)	1.36 N•m (12 lb•in)	–	–	–
Wire size(1)	Single wire connection: 0.33...2.1 mm^2 (22...14 AWG) solid or stranded shielded copper wire rated at 105 °C (221 °F), or greater, 1.2 mm (3/64 in.) insulation max. Do not wire more than one conductor on any single terminal. Double wire connection: 0.33...1.3 mm^2 (22...16 AWG) solid or stranded copper wire rated at 105 °C (221 °F), or greater, 1.2 mm (3/64 in.) insulation max. Do not wire more than two conductors on any single terminal.		Single wire connection: 0.33...2.1 mm^2 (22...14 AWG) solid or stranded copper wire, rated at 105 °C (221 °F) or greater, 1.2 mm (3/64 in.) insulation max. Do not wire more than one conductor on any single terminal.		–
Screwdriver width	3.2 mm (1/8 in.)	8 mm (5/16 in.) Max	–	–	–

(1) Maximum wire size requires extended housing, catalog number 1756-TBE.

Wiring Systems

As an alternative to purchasing an RTB and connecting the wires yourself, you can purchase one of these types of wiring systems:

- Interface modules (IFMs) that provide the output terminal blocks for digital I/O modules. Use the pre-wired cables that match the I/O module to the IFM or AIFM.
- Analog interface modules (AIFMs) that provide the output terminal blocks for analog I/O modules. Use the pre-wired cables that match the I/O module to the IFM or AIFM.

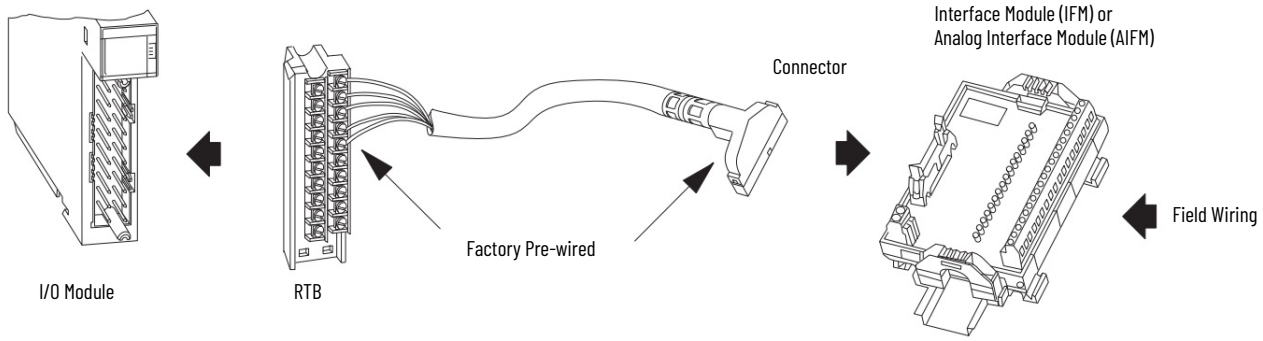

- I/O module-ready cables. One end of the cable assembly is an RTB that plugs into the front of the I/O module. The other end has individually color-coded conductors that connect to a standard terminal block.

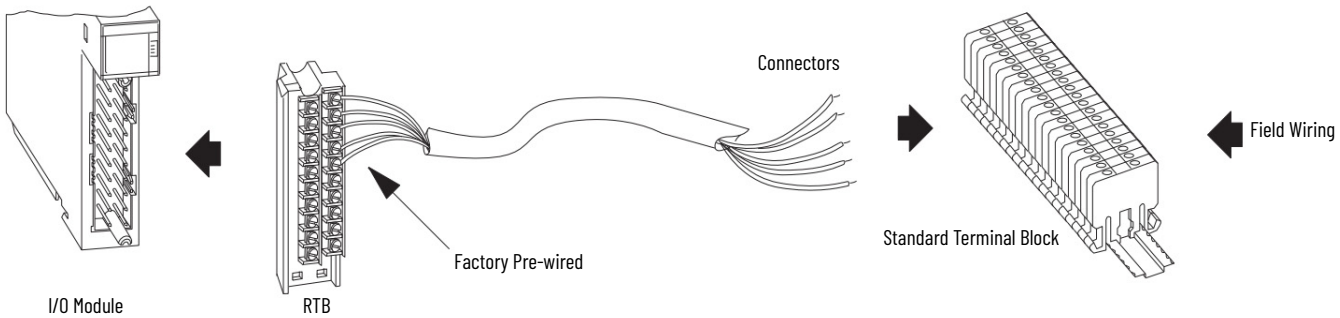

Notes:

Additional Resources

These documents contain additional information concerning related products from Rockwell Automation. You can view or download publications at rok.auto/literature.

Resource	Description
ControlLogix System User Manual, publication 1756-UM001	Describes how to use a ControlLogix system
ControlLogix 5580 and GuardLogix 5580 Controllers User Manual, publication 1756-UM543	Describes how to use a ControlLogix 5580 or GuardLogix 5580 Controller
ControlLogix Digital I/O Modules User Manual, publication 1756-UM058	Describes how to use ControlLogix digital I/O modules
ControlLogix Analog I/O Modules User Manual, publication 1756-UM009	Describes how to use ControlLogix analog I/O modules
1756 ControlLogix Digital Safety I/O Modules User Manual, publication 1756-UM013	Describes how to use ControlLogix digital safety I/O modules
ControlLogix HART Analog I/O Modules User Manual, publication 1756-UM533	Describes how to use ControlLogix HART Analog I/O modules
ControlLogix Configurable Flowmeter Module User Manual, publication 1756-UM010	Describes how to use a ControlLogix Configurable Flowmeter module
ControlLogix High-speed Counter Module User Manual, publication 1756-UM007	Describes how to use a ControlLogix High-speed counter module
ControlLogix Programmable Limit Switch Module User Manual, publication 1756-UM002	Describes how to use a ControlLogix Programmable Limit Switch module
ControlLogix Compute Modules User Manual, publication 1756-UM003	Describes how to use ControlLogix Compute modules
FactoryTalk Analytics LogixAI Quick Start, publication 1756-QS002	Describes how to configure the FactoryTalk® Analytics™ LogixAI® module
FactoryTalk Historian Machine Edition Series C Configuration Guide, publication 1756-UM019	Describes how to configure and use the FactoryTalk® Historian ME Series C module
Industrial Components Preventive Maintenance, Enclosures, and Contact Ratings Specifications, publication IC-TD002	Provides a quick reference tool for Allen-Bradley industrial automation controls and assemblies
Safety Guidelines for the Application, Installation, and Maintenance of Solid-State Control, publication SGI-1.1	Designed to harmonize with NEMA Standards Publication No. ICS 1.1-1987 and provides general guidelines for the application, installation, and maintenance of solid-state control in the form of individual devices or packaged assemblies incorporating solid-state components
Industrial Automation Wiring and Grounding Guidelines, publication 1770-4.1	Provides general guidelines for installing a Rockwell Automation industrial system
Product Certifications website, rok.auto/certifications.	Provides declarations of conformity, certificates, and other certification details

Rockwell Automation Support

Use these resources to access support information.

Technical Support Center	Find help with how-to videos, FAQs, chat, user forums, Knowledgebase, and product notification updates.	rok.auto/support
Local Technical Support Phone Numbers	Locate the telephone number for your country.	rok.auto/phonesupport
Technical Documentation Center	Quickly access and download technical specifications, installation instructions, and user manuals.	rok.auto/techdocs
Literature Library	Find installation instructions, manuals, brochures, and technical data publications.	rok.auto/literature
Product Compatibility and Download Center (PCDC)	Download firmware, associated files (such as AOP, EDS, and DTM), and access product release notes.	rok.auto/pcdc

Documentation Feedback

Your comments help us serve your documentation needs better. If you have any suggestions on how to improve our content, complete the form at rok.auto/docfeedback.

Allen-Bradley, ControlLogix, expanding human possibility, FactoryTalk, FactoryTalk Analytics LogixAI, GuardLogix, Integrated Architecture, PHOTOSWITCH, and Rockwell Automation are trademarks of Rockwell Automation, Inc.
CIP Sync, ControlNet, and EtherNet/IP are trademarks of ODVA, Inc.
Microsoft Windows is a trademark of Microsoft Corporation.
Trademarks not belonging to Rockwell Automation are property of their respective companies.

Rockwell Automation maintains current product environmental compliance information on its website at rok.auto/pec.

Rockwell Automation NV Commercial Registration Number 0424.293.935
Rockwell Otomasyon Ticaret A.Ş. Kar Plaza İş Merkezi E Blok Kat:6 34752, İçerenköy, İstanbul, Tel: +90 (216) 5698400 EEE Yönetmeliğine Uygundur

Connect with us.

rockwellautomation.com — expanding **human possibility**®

AMERICAS: Rockwell Automation, 1201 South Second Street, Milwaukee, WI 53204-2496 USA, Tel: (1) 414.382.2000
EUROPE/MIDDLE EAST/AFRICA: Rockwell Automation NV, Pegasus Park, De Kleetlaan 12a, 1831 Diegem, Belgium, Tel: (32) 2663 0600
ASIA PACIFIC: Rockwell Automation SEA Pte Ltd, 2 Corporation Road, #04-05, Main Lobby, Corporation Place, Singapore 618494, Tel: (65) 6510 6608
UNITED KINGDOM: Rockwell Automation Ltd., Pitfield, Kiln Farm, Milton Keynes, MK11 3DR, United Kingdom, Tel: (44)(1908) 838-800

Publication 1756-TD002U-EN-E - September 2026
Supersedes Publication 1756-TD002T-EN-E - February 2025

Copyright © 2026 Rockwell Automation, Inc. All rights reserved. Printed in the U.S.A.