General Specifications

GS 01B08B02-01EN

YS1700
Programmable Indicating Controller

YS1000 Series
Functional Enhancement

■ GENERAL

The YS1700 Programmable Indicating Controller can be tailored for various applications by running a user program, and offers high reliability thanks to Yokogawa's proprietary technology, user friendliness, and expandability.
Standard models are smaller and lighter than earlier series, requiring less space for installation, and are compliant with international safety standards including the CE Mark and FM, CSA nonincendive (optional) approvals. For easy replacement of earlier controllers, models requiring the same panel cutout dimensions and depth as those of earlier models are also offered.

■ FEATURES

- Excellent legibility thanks to a full-dot, TFT LCD: High visibility of the display screen is ensured even in direct sunlight in the early morning and late afternoon. The user can freely access a desired operation display from meter, trend display, bar graph, alarm, and event displays. All parameters can be set via the front panel display.
- Function block programming: Besides the text programming compatible with earlier models, the YS1700 offers the new GUI-based programming method, function block programming. The optional YSS1000 Setting Software for YS1000 Series is used to develop user programs.
- Large programming capacity: Program capacity is 1000 steps for a text program, and 400 modules for a function block program.
- More powerful control and calculation functions: IEEE754-format four-byte floating-point calculations enable actual values to be used in calculations. More than a hundred types of calculation modules are featured, including exponential and logarithmic functions, temperature compensation, and pressure compensation.
- Function selection mode (needs no programming): The multi-function controller mode allows control to be selected from frequently used functions (single-loop, cascade, or selector control) without programming. Function assignments to digital and analog inputs/outputs (DIs, DOs, AIs, and AOs) can be determined by parameter settings.
- Expandable I/O: The basic type with expandable I/O has eight analog inputs, four analog outputs, ten digital inputs or ten digital outputs (total fourteen digital inputs and outputs).
- Fail-safe: Thanks to dual CPU (one for control and one for display), display and manual operations are enabled even during a failure of either CPU. The hard manual circuit incorporated independently from the digital circuits enables the controller output to be adjusted manually during a failure of a digital circuit including both CPUs. (The hard manual circuit is not incorporated when the suffix code -2xx option is specified.)
- Nonvolatile memory for memory backup: No battery or capacitor is used for memory backup, facilitating maintenance.
- AC/DC dual power supply with wide operating voltage range to ensure stability against supply voltage fluctuations: Can be driven by either an AC (100 V) or DC (24 V) power supply. Furthermore, the DC power supply enables receiving power without polarity. (Must be specified upon ordering if using a 220 V AC power supply.)
- 250 mm depth (for basic types only)
- Dust- and splash-proof IP54 faceplate (for basic type only)
- CE Mark (for basic type and YS100 compliant type only)
- FM Nonincendive explosion protection (optional for basic type only)
- CSA Nonincendive explosion protection (optional for basic type).
- Communication (optional)
  - Ethernet (Modbus/TCP; for basic type only)
  - RS485 (PC Link, Modbus, Peer-to-Peer communication, and YS protocol; unavailable for YS80 internal unit-compatible type)
  - DCS-LCS communication
- Compatibility with YS100 Series: Setting and control operations can be done with the same feel. For basic-type cases, terminal-to-terminal pitches differ but the signal-to-terminal arrangement is almost the same.

Type	Model and Suffix Codes (x: Depending on specifications)	Analog Inputs		Analog Outputs		Digital Inputs and Outputs (*2)
		1–5 V	Direct inputs (*3)	1–5 V (*1)	4–20 mA	
Basic type	YS1700-x0x	5	-	2 (1)	1 (2)	6
Basic type with expandable I/O	YS1700-x1x	8	-	3 (2)	1 (2)	14
Compatible type for YS100	YS1700-x2x (/Ax)	5 (4)	(1)	2 (1)	1 (2)	6
Compatible type for YS80 internal unit	YS1700-x3x	5	-	2 (1)	1 (2)	6
Compatible type for EBS and I	YS1700-x3x	5	-	2 (1)	1 (2)	6
Compatible type for EK and HOMAC	YS1700-x3x	5	-	2 (1)	1 (2)	6
Compatible type for YS80(Compatible size for YS80 with YS100 terminal)	YS1700-x4x (/Ax)	5 (4)	(1)	2 (1)	1 (2)	6
Compatible type for 100 line(with YS100 terminal)	YS1700-x5x (/Ax)	5 (4)	(1)	2 (1)	1 (2)	6

*1: One point can be changed to 4–20 mA DC by a parameter setting.
*2: For only six points, each can be used as either a DI or DO by a parameter setting.
*3: One from among five analog inputs can be used for a direct input (Option/Ax where x = 01 to 08).
*4: An interface for the additional Expandable I/O cannot be added afterdelivery. If there is a possibility that extra input/outputs will be needed, we recommend that you start with the basic type (with expandable I/O)

YOKOGAWA
Yokogawa Electric Corporation
2-9-32, Nakacho, Musashino-shi, Tokyo, 180-8750 Japan
GS 01B08B02-01EN
©Copyright Jun. 2014 (YK)
10th Edition June 16, 2025 (YK)

■ DISPLAY AND SETTING FUNCTIONS

Display Functions

(1) Display Specifications

YS1700 displays are composed of the following three groups and the individual functions can be set up via displays for the respective settings:

Operation displays	LOOP displays TREND displays ALARM displays DUAL display METER display FAIL display
Tuning displays	PID settings STC settings Parameter settings P and T register settings Input/output data display
Engineer-ing	Function settings Input specification settings Password setting Line-segment characterizer function settings Operation display settings LCD settings Communication settings DI/DO settings Flexible line-segment characterizer function settings Programmed setpoint settings Preset PID settings K register value display K

(2) Operation Displays

- **Bar Graph Displays (in LOOP and DUAL displays)**

Scale divisions	Up to 20
Digits of scale markings	Up to 7 digits (including decimal point and sign)
Display position of scale markings	At 0% and100% positions
Units	Up to 7 alphanumeric characters
PV bar graph resolution	0.5%
SV pointer resolution	0.5%
Alarm setting pointer resolution	0.5%
MV bar graph resolution	1.25%
PV overflow display	Above 100%
PV underflow display	Below 0%

- **Meter Displays (in METER displays)**

Scale divisions	Automatic setting based on upper and lower scale limits (reading factor can be modified).
Scale graduation	
Scale markings	
Reading factor	
Digits of scale markings	Up to 6 digits (including decimal point and sign)
Display position of scale markings	At 0% and100% positions
Units	Up to 7 alphanumeric characters
PV pointer resolution	0.5%
SV pointer resolution	0.5%
Alarm setting pointer resolution	0.5%
MV pointer resolution	1.25%

- **Tag Number and Digital Value Displays**

Display characters for tag numbers	Alphanumeric characters
Display digits of tag numbers	Up to 12
Display digits of PV and SV digital indications	Up to 7 (including decimal point and sign)
Display digits of MV digital indica-tions	Up to 6 (including decimal point and sign)

- **Trend Display Specifications Kinds of TRENDdis-plays**

TREND1	Can display the trend curves for three variables: PV1, SV1, and MV1. These PV1, SV1, and MV1 curves can be hidden and shown individually. Scaling can be performed for PV1 and SV1 for display.
TREND2	Can display the trend curves for three variables: PV2, SV2, and MV2. These PV2, SV2, and MV2 curves can be hidden and shown individually. Scaling can be performed for PV2 and SV2 for display.
TREND3	Can display on the same graph the trend curves of four variables arbitrarily chosen by the user from PV1, SV1, MV1, PV2, SV2, MV2, X1–X8, and Y1–Y4. Scaling can be performed for chosen PVs and SVs for display.

- **Trend Display Time Span**

  1.5, 7.5, 15, or 45 minutes; or 1.5, 7.5, 15, or 45 hours

- **Event Display Specifications**

  The event display means that a user-defined message will appear on the current operation display when a predefined event occurs.
  The event display can be closed by pressing the SHIFT key for three seconds and the messages can be redis-played in the ALARM display. Up to five event messages can be set.
  To use this event display function, specify the messages and corresponding events (flag statuses) inside the event display settings in YSS1000 setting software.

- **Manual SV and MV Changes**

  Via operation displays, SV and MV can be changed us-ing keys on the front panel.

Rate of manual SV increments/decrements	40 seconds/full scale
Rate of manual MV increments/decrements	Normal: 40 seconds/full scale FAST mode: 4 seconds/full scale

- **Display during Failure**

  The display is automatically switched to the FAIL display upon a failure. For details, see the “Self-diagnostics” section.

All Rights Reserved. Copyright © 2014, Yokogawa Electric Corporation

Names of Elements

(1) Front Panel

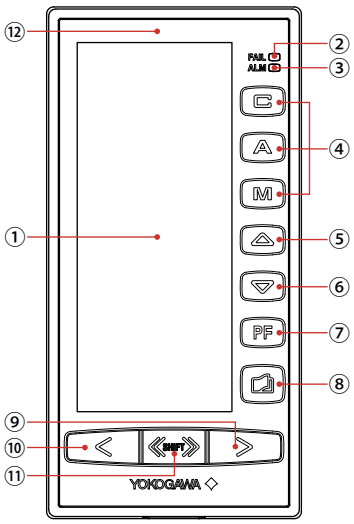

No.	Name
1	Color LCD, 120×320 pixels *1
2	FAIL lamp (red LED)
3	ALM lamp (yellow LED)
4	C (cascade), A (automatic), and M (manual) mode keys with respective mode indicators (green LED for C, green for A, yellow for M)
5	SV increase key
6	SV decrease key
7	PF key and LED indicator
8	Page key
9	MV increase key
10	MV decrease key
11	Fast change/SHIFT key
12	Tag label (advisable position to paste)

*1 The backlight brightness can be adjusted, and the backlight can be turned off.

(2) Inner Panel behind Swing-up Front Panel

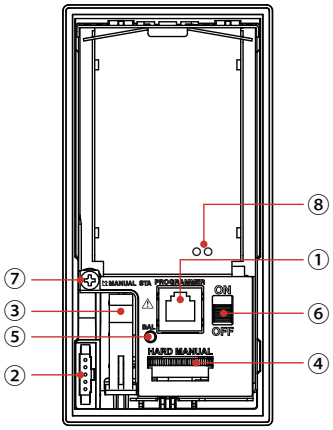

No.	Name	Remarks
1	Computer link connector (PROGRAMMER):	Communication cable connector used when downloading, uploading, and viewing the parameters and user program set using the YSS1000 Setting Software for YS1000 Series
2	Connector for YS110 standby manual station (MANUAL STA)	For connecting the YS110 standby manual station
3	Internal-unit release lever	Used when drawing out the internal unit
4	Hard manual operation wheel (HARD MANUAL)	Used to set the output level
5	MV balance lamp (BAL [green])	Lights up when the control output agrees with the hard manual output level.
6	Hard manual selector switch (ON/OFF)	Used to switch over the output (MV) to the level set by the hard manual operation wheel
7	Internal-unit fixing screw	Used to prevent the internal unit from being drawn out
8	LED and switch for repair	Contact us for repair.

Control Output Backup (For suffix code -1xx)

The hard manual wheel behind the front panel enables manual operations in an emergency.

Output balancing before a switchover from/to hard manual is possible.

Note: Connecting the YS110 standby manual station enables the internal unit to be replaced without interrupting the 4–20 mA DC control output (Y1). (Replacement of the internal unit, however, should be performed by a Yokogawa authorized serviceperson.)

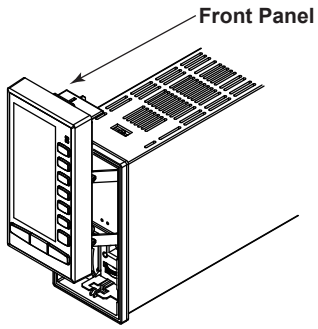

All Rights Reserved. Copyright © 2014, Yokogawa Electric Corporation

■ FUNCTION SPECIFICATIONS

(1) Controller Modes

The controller mode is selected from programmable mode and function selection mode, and when the function selection mode is selected, one of the following modes should be selected: single-loop mode, cascade mode, or selector mode.

Controller Mode		Description
Programmable mode (needs YSS1000 setting software)		Using YSS1000, the user can assemble control and various calculation modules to configure control calculations. The following three types of control modules are available: • Basic control modules (BSC1 and BSC2)· • Cascade control module (CSC)· • Selector control module (SSC)
Function selection mode	Single-loop mode	Basic control module preassembled with auxiliary control functions
	Cascade mode	Cascade control module preassembled with auxiliary control functions
	Selector mode	Selector control module preassembled with auxiliary control functions

(2) Control Types

The control type can be selected by a parameter from PID, PD, sample-and-hold PI, and batch PID.

(3) Control Parameters

Common Parameters for PID, PD, Sample-and-hold PI, Batch PID

Parameter	Setting Range
Proportional band, PB	0.1 to 999.9 (%)
Integral time, TI (*1)	1 to 9999 (seconds)
Derivative time, TD (*2)	0 to 9999 (seconds)

Parameters Specific to PD

Parameter	Setting Range
First-order lag time constant (*3)	1 to 9999 (seconds)
Manual reset, MR	–6.3 to 106.3 (%)

Parameters Specific to Sample-and-hold PI

Parameter	Setting Range
Sample period, STM	0 to 9999 (seconds)
Control time span, SWD	0 to 9999 (seconds)

Parameters Specific to Batch PID

Parameter	Setting Range
Deviation, BD	0.0 to 100.0 (%)
Bias, BB	0.0 to 100.0 (%)
Lock-up width, BL	0.0 to 100.0 (%)

*1: Needs no setting for PD control.
*2: A setting from 1 to 9999 is effective and 0 means OFF.
*3: To avoid abrupt changes in output when the operation mode is changed, follow-up actions take place with first-order lag delay. Set the parameter to an integral time.

(4) Operation Modes

- Operation mode switching by digital inputs:
  In programmable mode, specify in the user program.
  In function selection mode, switching functions can be assigned to digital inputs.
  For details, see the “Function Assignments to Digital Inputs” section.
- Digital outputs of operation mode statuses:
  In programmable mode, specify in the user program.
  In function selection mode, status indicating functions can be assigned to digital inputs.
  For details, see the “Function Assignments to Digital Outputs” section.

(5) Control and Input/Output Calculation Period

	Programmable Mode	Function Selection Mode
Control period	50 ms 100 ms 200 ms	100 ms

Control Add-on Functions (in Both Programmable Mode and Function Selection Mode)

The following functions can be added to control actions by simple parameter settings:

Adjustable setpoint filters
Self tuning (STC)
Non-linear PID control
PID control with reset bias
Output limiters
Alarm detection
Remote cascade setpoint input

Control Add-on Functions (Only in Programmable Mode)

The following add-on functions can be used in the user program:

Input compensation
Output compensation
Adaptive (variable) gain
Preset PID

Control Add-on Functions (Only in Function Selection Mode)

The following functions can be added to control actions by simple parameter settings; however, the available add-on functions differ depending on the controller mode:

	Single-loop Mode	Cascade Mode	Selector Mode
Feed-forward control	✓	✓	
Output tracking	✓	✓	✓
Preset MV	✓	✓	✓
PV tracking	✓		
SV tracking	✓		
Operation mode switching by digital inputs	✓	✓	✓
Input filter	✓	✓	✓
Square-root extraction	✓	✓	✓
Ten-segment linearizer function	✓	✓	✓
Ratio operation	✓	✓	✓

All Rights Reserved. Copyright © 2014, Yokogawa Electric Corporation

Communication Functions

(1) Communication with Host Systems

Communication with various host systems including Yokogawa's DCSs such as the CENTUM CS 3000 and programmable logic controllers such as the FA-M3, is supported.

Host System	Link Device in Host System	YS1700 Communication Functions	
		Option	Protocol
CENTUM CS 3000 or VP	ALR121 (direct connection)	RS-485 (/A31)	YS protocol
FA-M3	UT link module		PC link
PLC or PC from other vendors	RS-485 connection		Modbus RTU/ ASCII (Slave)
	Ethernet connection	Ethernet (/A34)	Modbus/TCP (Server)

- Communication capabilities:
  Read access to various measured values, and read and write access to various parameters is possible. Write access can be disabled.
- Computer mode:
  In addition to the previously mentioned normal operation modes, there are two operation modes for control by an host system. In DDC mode, the control output MV is directly manipulated by the host system. In SPC mode, the control setpoint SV is manipulated by the host system.
- Backup mode after communication fault:
  The mode into which the controller should fall when communication with the host system has continuously been lost for a preset time period, can be selected between MAN or AUT.

(2) Peer-to-Peer communication (Available only in Programmable Mode)

YS1700s connected to an RS-485 link can exchange data with each other.

- Maximum number of YS1700s: 32
- Maximum number of YS1700s that can transmit data: 4
- Receivers: 32 YS1700s including senders (those that transmit data)
- Transmitted data: 4 analog and 16 status data per sender
- Communication period: 200 ms on average (asynchronous to control calculation periods)

Function Selection Mode – Input/Output Settings

(1) Digital Inputs/Outputs (DI/DO) Settings

Each DI/DO terminal on the main unit can be used freely as either a DI or DO, whereas those terminals on the expandable I/O are fixed to either DIs or DOs.

(2) Function Assignments to Digital Inputs

One of the following functions can be assigned to each DI. Available functions differ depending on the controller mode as shown in the table.

Function \ Controller mode	Single-loop	Cascade	Selector
CAS↔AUTO remote switching	✓		
CAS/AUTO↔MAN remote switching	✓		
Internal cascade connection open↔close		✓	
Second loop setpoint remote↔local			✓
Loop select (OFF = first loop; ON = second loop)			✓
Preset MV output ON↔OFF	✓	✓	✓
Output tracking ON↔OFF	✓	✓	✓
Preset MV output ON and mode = MAN	✓	✓	✓
Self-tuning remote ON↔OFF switching	✓	✓	✓
Momentary trigger to change mode to M mode	✓	✓	✓
Momentary trigger to change mode to A mode	✓	✓	✓
Momentary trigger to change mode to C mode	✓	✓	✓
LCD backlight OFF	✓	✓	✓

(3) Function Assignments to Digital Outputs

One of the following status output functions can be assigned to each DO. Available functions differ depending on the controller mode as shown in the table.

Function \ Controller mode	Single-loop	Cascade	Selector
High limit alarm for PV1	✓	✓	✓
Low limit alarm for PV1	✓	✓	✓
High-high limit alarm for PV1	✓	✓	✓
Low-low limit alarm for PV1	✓	✓	✓
Deviation alarm for variable 1	✓	✓	✓
Velocity alarm for PV1	✓	✓	✓
High limit alarm for PV2		✓	✓
Low limit alarm for PV2		✓	✓
High-high limit alarm for PV2		✓	✓
Low-low limit alarm for PV2		✓	✓
Deviation alarm for variable 2		✓	✓
Velocity alarm for PV2		✓	✓
Deviation alarm for variable 1 or Velocity alarm for PV1	✓	✓	✓
Deviation alarm for variable 2 or Velocity alarm for PV2		✓	✓
Loop 1 alarm	✓	✓	✓
Loop 2 alarm		✓	✓
C mode (not A/M) identification status output	✓	✓	✓
M mode (not C/A) identification status output	✓	✓	✓
Internal cascade open/close status output		✓	
Loop 2 setpoint remote/local status			✓

(4) Analog Output (Transmission) Settings

The following variables can be assigned to analog outputs for transmission:

PV1 and PV2
SV1 and SV2
MV
AI1 to AI5
*AI6 to AI8

*Available only for the basic type with expandable I/O.

Input/Output Signal Computations

In function selection mode, input/output computations can be enabled by simple parameter settings. In program mode, these computations can be included in the user program.

- Input signal computations:

Square root extraction with variable low cutoff
10-segment linearizer function
First-order lag
External cascade setpoint computation
Setpoint ratio
Feed-forward input computation
Other signal processing

All Rights Reserved. Copyright © 2014, Yokogawa Electric Corporation

• Output signal computations:

Output high-limiter
Output low-limiter

• Input/output signals and internal data:

	Signal	Measurable Signal Limits (Typical)
	Internal Data	Internal Data
Inputs	1 to 5 V	0 to 5.5 V
	0.0000 to 1.0000	–0.2500 to 1.1250
Outputs	1 to 5 V	0.75 to 5.25
	0.0000 to 1.0000	–0.0625 to 1.0625
	4 to 20 mA	0.8 to 21.0 mA
	0.0000 to 1.0000	–0.0625 to 1.0625

Note: Current outputs have a tight-shutoff feature.

User Programming Functions

(1) Computation Modules

	Module Name	Max. number of times of use (*1)
Basic Computations	Addition	Unlimited
	Subtraction	
	Multiplication	
	Division	
	Square root extraction (no hysteresis)	
	Absolute value	
	High selector	
	Low selector	
	High limiter	
	Low limiter	
	Natural logarithm	
	Common logarithm	
	Exponential	
	Power	
	Temperature compensation	
	Pressure compensation	
	Scaling	
	Normalization	
	Ratio	
	Conversion from DI to BCD	
	Conversion from BCD to DO	
	Conversion from DI to binary	
	Conversion from binary to DO	
	Maximum	
	Minimum	
	Average	
	Increment	
	Decrement	

	Module Name	Max. number of times of use (*1)
Computation Modules with Serial Number	10-segment linearizer function	2
	Inverse conversion of 10-segment linearizer function	2
	Arbitrary segment linearizer function	2
	Inverse conversion of arbitrary segment linearizer function	2
	High limit alarm	8
	Low limit alarm	8
	First-order lag (2 kinds: second, minute)	8
	Derivative (2 kinds: second, minute)	2
	Dead time (2 kinds: second, minute)	3
	Velocity computation (2 kinds: second, minute)	3
	Moving average computation (2 kinds: second, minute)	3
	Velocity limiter	6
	Timer (2 kinds: second, minute)	8
	Time out (2 kinds: second, minute)	8
	Program setter (2 kinds: second, minute)	2
	Change detection	8
	Pulse input counter	8
	Totalizer pulse output	2
	Square root extraction (Low cutoff point or less: Linear) (*2)	8
	Square root extraction (Low cutoff point or less: Zero) (*2)	8
	RS flip-flop	8
	Hold timer (2 kinds: second, minute)	8
	Delay timer (2 kinds: second, minute)	8
	Previous input variable	8
	Hold	8
Logical Operations	AND	Unlimited
	OR	
	Exclusive OR	
	NOT	
Conditional Judgment	Comparison	
	Signal switching	
	Jump (*3)	
	Conditional jump (*3)	
	Jump to sub-program	
Control Functions	Basic control	2
	Cascade control	1
	Selector control	1
Others	S register change (*3)	Unlimited
	S register rotation (*3)	

*1: Limitation when used within the limit of programming capacity.
*2: Hysteresis exists at low cutoff point.
*3: Unavailable in function block programming.

All Rights Reserved. Copyright © 2014, Yokogawa Electric Corporation

- Constants for computations
  Variables: 30 (P parameters)
  Constants: 100 (K parameters)
- Temporary memory registers
  For numeric data: 60

(2) Online Debugging Functions

The YSS1000 setting software enables online checking of programs, with its ability to carry out test runs and online function block monitoring.

(3) Functions of, and System Requirements for, YSS1000 Setting Software

Program development	Using YSS1000, a program can be developed on a computer and downloaded to a YS1700 via communication.
Programming method	Can be selected from text programming or function block programming.
Test runs (of text programs or function block programs)	Test runs of developed user programs can be carried out. A simple I/O check program can be written in the simulation program area for verifying the user program's actions.Number of simulation program steps: Up to 50 steps or 10 modules
Online function block monitoring (for function block programs only)	Connecting to a YS1700 via communication enables operation checks of a user program written in function block programming.
User program capacity	Text programming: Up to 1000 steps (total of main program and sub-programs; sub-programs can be repeatedly used).
	Function block programming: Up to 400 modules
System requirements for YSS1000	For details, see GS01B08K02-01EN.
Internal data format	IEEE754-format single-precision floating-point calculations
Load calculation function	Provided (while running [in RUN state] or during a test run)

Self-tuning

- Loops subject to self-tuning:
  The table below shows the loop to be self-tuned in each mode.

Controller Mode		Subject to Self-tuning
Function selection mode	Single-loop mode	Loop 1
	Cascade mode	• Internal cascade open: Loop 2 • Internal cascade close: Loop 1
	Selector mode	Selected loop
Programmable mode	When using BSC1 and BSC2	The loop specified in the user program for independent two-loop control
	When using CSC	• Internal cascade open: Loop 2 • Internal cascade close: Loop 1
	When using SSC	Selected loop

Alarm Functions (for Function Selection Mode)

The following process alarms can be detected. For other alarms, see the "Self-diagnostics" section.

Item	Setting Range	Remarks
PV high-limit and high-high-limit alarm setpoint (*1)	–6.3 to 106.3%	Settings are values in engineering units.
PV low-limit and low-low-limit alarm setpoint (*1)		
Absolute deviation alarm (*1)	0.0 to 106.3%	
Velocity alarm (*2)	0.0 to 106.3%	

*1: Alarm hysteresis = 0.1 to 20.0%
*2: Velocity alarm time setting: 1 to 9,999 seconds

- Contact status during alarm: Close or open as selected by the user.
- Contact status during power failure: Open.

Alarm Functions (for Programmable Mode)

In programmable mode, alarm detection functions need to be built into the user program.

Item	Service	Indication When Alarm Setpoint is Set or When Alarm Has Occurred	Remarks
Alarm Setpoint Pointers	PV higt-limit and low-limit alarm setpoint	Yellow pointer	In LOOP, DUAL, and METER displays
	PV higt-higt-limit and low-low-limit alarm setpoint	Orange pointer	
Alarm Indications	ALM lamp	Lights up in yellow	—
	Alarm occurrence indication	Alarm indication on LOOP display	—
	Alarm name display	Display on ALARM	—
	Tag number inversion display	Inversion and alternating display of tag numbers in all displays	Enabled and disabled by a parameter.
	Active display	Change of PV bar and its background colors	Alarm type to cause the active display is to be set by a parameter.

Response to Power Recovery after Failure

The response to a power recovery depends on the duration of the failure and start mode setting.

Start Mode	Duration of Failure	
	Less than approx. 2 s	Approx. 2 s or longer
AUT	HOT start	
M-COLD (equivalent to TM1 and TM2 in YS100)	HOT start	M-COLD start
A-COLD	HOT start	A-COLD start
C-COLD	HOT start	C-COLD start
COLD	HOT start	COLD restart

Response to Power Recovery

	Response to Power Recovery	
	HOT start	M-COLD start A-COLD start C-COLD start COLD restart
C, A, or M mode	Remains the same as before power failure.	See note.
MV	Remains the same as before power failure.	–6.3%
SV	Remains the same as before power failure.	
Parameters including P, I, and D	Remains the same as before power failure.	
T registers	Remains unchanged.	0
Dynamic computations such as first-order lag delays	Continuously performed.	Initialized
STC result parameter	Initialization	

Note: M mode at an M-COLD start, A mode at an A-COLD start, C mode at a C-COLD start, and the same as before the power failure, at a COLD restart.

All Rights Reserved. Copyright © 2014, Yokogawa Electric Corporation

Self-diagnostics

(1) System Failure

- Causes of system failure:
  Various hardware failures such as main CPU failure, display CPU failure, A/D conversion error, D/A conversion error, and memory error
- Response to system failure:
  The FAIL lamp lights up; the FAIL contact opens (as is the case with power failure); analog outputs are held (Y1 can be changed manually); and digital outputs are held.

(2) Alarms

- Alarm types:
  System alarms, process alarms (see the “Alarm Functions [for Function Selection Mode]” section for details), self-tuning alarms
- Response to alarms:
  See the table showing the alarm indications in the “Alarm Functions (for Function Selection Mode)” section.

Display upon System Failure

Upon system failure, the display changes to the FAIL display. In the case of a main CPU failure, the display CPU shows the FAIL display and allows manual operations in M mode. Also in the case of a display CPU failure, the main CPU shows the FAIL display and allows manual operations in M mode.
* Except cases of clock stopping or simultaneous failure of the main and display CPUs

Security

The parameters and user program can be password-protected.

■ Hardware Specifications

Input/Output Specifications

Analog Inputs

Input Type	Programmable Mode	Function Selection Mode
1 to 5 V DC (main unit)	5 points	4 points
1 to 5 V DC (expandable I/O)	3 points	
Direct input (optional, *1)	Available for 1 point from above	
Input resistance	1 MΩ	

*1: To be specified from mV, thermocouple, RTD, potentiometer, two-wire transmitter, isolator, or frequency input.
For the details of direct input, refer to "Direct Input Specification."

Analog Outputs

Output Type	Programmable Mode	Function Selection Mode
4 to 20 mA	1 point	1 point
1 to 5 V DC (main unit)	2 points (one can be changed to 4 to 20 mA output)	2 points
1 to 5 V DC (expandable I/O)	1 point	1 point

Load Resistance	Programmable Mode	Function Selection Mode
4 to 20 mA	0 to 750 Ω	
1 to 5 V DC (main unit)	At least 2 kΩ (see note)	
1 to 5 V DC (expandable I/O)	At least 10 kΩ	

Note: Use a voltage output for the YS1700 main unit to connect to an SIHN panel meter (2 kΩ).

Digital Inputs

Item	Programmable Mode	Function Selection Mode
Digital inputs (main unit)	6 points (shared use with digital outputs)	
Digital inputs (expandable I/O)	4 points (minus line common)	

Input Type	ON	OFF
No-voltage contacts (*1, *2)	Close (resistance at 200 Ω or less)	Open (resistance at 100 kΩ or larger)
Voltage contacts (*2)	Low (input voltage between –0.5 to 1 V DC)	High (input voltage between +4.5 to 30 V DC)

*1: Input contact rating: 5 V DC, 20 mA or more.
Minimum pulse width:
- In programmable mode
  220 ms (control period at 200 ms)
  120 ms (control period at 100 ms)
  70 ms (control period at 50 ms)
- In function selection mode: 120 ms

*2: The same terminals can be connected to both no-voltage and voltage contacts.

All Rights Reserved. Copyright © 2014, Yokogawa Electric Corporation

Digital Outputs

Item	Programmable Mode	Function Selection Mode
Digital outputs (main unit)	6 points (shared use with digital inputs)	
Transistor contacts	Rating: 30 V DC, 200 mA (resistance load)	
Digital outputs (expandable I/O)	4 points (minus line common)	
Transistor contacts	Rating: 30 V DC, 200 mA (resistance load)	
FAIL output (*1)	1 point	
Transistor contacts	Rating: 30 V DC, 200 mA (resistance load)	

*1: Normally closed (NC) and open during power failure or system failure.

Transmitter Power Supply

Item	Specification
Supply voltage	25 to 25.5 V DC
Load	60 mA or less (30 mA or less if the direct input option is included)
Short-circuit protection	80 mA ±10 mA
Others	No effect of a short-circuit on the control circuit. Not isolated from the control circuit. 250 W resistor for conversion into 1-to-5 V signal must be prepared externally if necessary.

Standard Specifications

Standard Working Conditions

Ambient temperature 23°C ±2°C

Relative humidity: 50% ±10%

Power supply:

- AC (100 V) DC (24 V) dual power drive models: 24 V DC ±10% or 100 V AC ±10%, 50/60 Hz
- 220 V AC power drive models: 135 V DC ±10% or 220 V AC ±10%, 50/60 Hz

Item	Specification
I/O conversion accuracy	
1 to 5 V inputs	±0.1% of span
Direct inputs	±0.5% or ±(2 × |direct input card's accuracy| + 0.1%)
Analog voltage outputs (YS1700 main unit)	±0.1% of span
Analog voltage outputs (expandable I/O)	±0.2% of span
Analog current outputs	±0.2% of span
Allowable input voltage (*1)	
1 to 5 V mV or TC direct input Two-wire transmitter	±30 V DC –0.5 to 4 V DC +40 mA DC
Warm-up time	1 minute (time needed after power-on until the readings fall within the rated accuracy) or 3 minutes for direct input

Item		Specification
Current dissipation and power consumption		AC (100 V) DC (24 V) dual power driven: 750 mA (20 to 132 V DC) 30 VA (80 to 138 V AC)
		220 V AC power driven: 110 mA (120 to 340 V DC) 30 VA (138 to 264 V AC)
Insulation resistance		100 MΩ at 500 V DC between input terminals and ground terminal, and between power supply terminals and ground terminal
Withstand voltage	Between input/output terminal and ground terminal	1000 VAC for one minute (In the case of suffix codes -x0x, -x1x, or -x2x)
		500 VAC for one minute (In the case of suffix codes -x3x, -x4x, or -x5x)
	Between power supply terminal (L, N) and (all I/O terminal and ground terminal)	3000 VAC for one minute (In the case of suffix codes -x0x, -x1x, or -x2x)
	Between power supply terminal (L,N) and ground terminal	1500 VAC for one minute
LCD replacement period		8 years

*1: Measurement category in accordance with IEC/EN 61010-1, IEC/EN 61010-2-201, IEC/EN 61010-2-030, and CAN/CSA-C22.2 No.61010-1, CAN/CSA-C22.2 No. 61010-2-030: O (other)

Regarding the LCD

A small number of missing or steady-on LCD pixels and minor variations in brightness uniformity is a normal display characteristic and not a malfunction.

Signal-to-signal Isolation

Item	Basic type
Analog I/O signals	- Not isolated from the control circuit - Channel-to-channel not isolated, minus lines connected to common - Isolated from other types of I/O signals
Direct input	- Isolated from control circuit except for non-isolated two-wire transmitter input - Isolated from power supply circuit - Isolated from other types of I/O signals
Digital I/O signals	- Isolated from control circuit - Isolated from other types of I/O signals - Channel-to-channel isolated (see note)
FAIL signal	- Isolated from control circuit - Isolated from other types of I/O signals
Communication	
Power supply	
Ground	

Note: Within the terminals on the expandable I/O, the minus wires of the individual digital inputs are connected to the same common line, and so are the digital outputs. Thus, the expanded DIs and DOs are channel-to-channel non-isolated but those DIs are isolated from those DOs.

All Rights Reserved. Copyright © 2014, Yokogawa Electric Corporation

Insulation Block Diagram

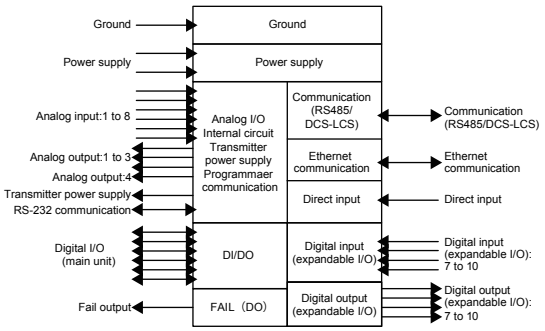

Power Supply Ratings

When used within the supply voltage ranges below, the YS1700 is compliant with the FM/CSA nonincendive and Safety standards.

For AC (100 V) and DC (24 V DC) dual power drive models:

- 24 to 120 V DC (±10%), no polarity, 750 mA MAX
- 100 to 120 V AC (±10%), 50/60 Hz (±3 Hz), 30 VA MAX

For 220 V AC power drive models:

- 135 to 190 V DC (±10%), no polarity, 110 mA MAX
- 220 to 240 V AC (±10%), 50/60 Hz (±3 Hz), 30 VA MAX

All Rights Reserved. Copyright © 2014, Yokogawa Electric Corporation

Normal Working, Transportation, and Storage Conditions

Item	Normal Working	Transportation and Storage
Ambient temperature	0 to 50°C	–20 to 60°C
Ambient relative humidity	5 to 90% (no condensation allowed)	5 to 95% (no condensation allowed)
Power supply voltage (AC) (*1)	80 to 138 V AC (for AC [100 V] or DC [24 V] dual drive models) 138 to 264 V AC (for 220 V AC drive models)	–
Power supply frequency (AC)	±3 Hz	–
Power supply voltage (DC) (*1)	20 to 132 V DC (for AC [100 V] or DC [24 V] dual drive models) 120 to 340 V DC (for 220 V AC drive models)	–
Continuous vibration	5 to 14 Hz with amplitude of 0.625 mm or less;14 to 150 Hz with acceleration of 4.9 m/s^2 or less along orthogonal 3 directions for 2 hours each	
Transient vibration	14.7 m/s^2 for 15 seconds or less	
Mechanical impact	49 m/s^2 (5 G) or less for 11 ms or less	
Package fall	1 m or less	
Magnetic field	400 A/m or less	
Toxic gases	No corrosive gases must be present.	
Installation height	At elevation of 2000 m or less	
Atmospheric pressure	86 to 106 kPa	

*1: Differs from the conditions meeting the CE safety standard, FM/CSA nonincendive standards and CSA safety standards.

Effect of Variations in Working Conditions

Item	Specification
Effect of fluctuations in power supply	|Accuracy|
Effect of input lead-wire resistance	0.13% (per 1 kΩ)
Effect of load resistance	|Accuracy|/5 2 kΩ to ∞,1 to 5 V output 0 to 750 Ω,4 to 20 mA
Common mode noise rejection ratio	83 dB for (1 to 5 V inputs), 50/60 Hz
Series mode noise rejection ratio	46 dB (1 to 5 V inputs), 50/60 Hz
Effect of magnetic field	|Accuracy|/5 (400 A/m, 50/60 Hz or DC)
Effect of ambient temperature changes	|Accuracy| (per 10°C change within 0 to 50°C)
Effect of ambient humidity changes	|Accuracy| (50% to 93% RH at 40°C)

Communication Specifications

Item	Programmer Communication (with YSS1000)	RS-485	DCS-LCS	Ethernet
Electrical specifications	RS-232C compliant	EIA RS-485 compliant	Yokogawa proprietary	IEEE802.3 compliant 10BASE-T/100BASE-TX
Connection	Dedicated connector behind the front panel	Screw terminals at the rear (5 signal and 1 ground terminals)	Screw terminals at the rear (2 terminals)	RJ45 connector at the rear
Number of controllers that can be linked	1	Max. 31 controllers per port (*3)	8 controllers per LCS card, 4 controllers per SCIU card	Max. 4 cascaded tiers (10BASE-T), max. 2 cascaded tiers (100BASE-TX) (*1) Number of connections: 2 Maximum number of transactions: 1 (*4)
Applicable cable	Model A1053UR (dedicated USB – RS-232C adapter cable)	Shielded twist-pair cable with core size of 0.5 to 1.25 mm2 (AWG 20 to 16)	Model SCCD (dedicated shielded twist-pair cable)	10BASE-T/100BASE-TX cable
Cable length	Approx. 2.7 m	Max. 1200 m (1.25 mm2)	Max. 100 m	100 m (*2)
Protocol	Proprietary protocol	PC link, Modbus RTU/ASCII (Slave), YS protocol, Peer-to-Peer communication	Proprietary protocol	Modbus/TCP (Server)

*1: Number of cascaded hub connections
*2: Maximum segment length (hub-to-YS1700 cable length)
*3: For Peer-to-Peer communication, up to 32 YS1700s can be linked to each other.
*4: Per a connection

All Rights Reserved. Copyright © 2014, Yokogawa Electric Corporation

Direct Input Specification

Item	mV Input	Thermocouple Input
Option code	/A01	/A02
Input signal	–50 to +150 mV DC	ANSI/JIS thermocouple type K, T, J, E, B, R, or S, or IEC/ANSI type N
Measurable span	10 to 100 mV DC	10 to 63 mV (equivalent emf)
Zero elevation of measurement range	Within 3 times the span or ±50 mV, whichever is smaller	Within 3 times the span or ±25 mV, whichever is smaller
Measurement range	Can be modified via an engineering display.	
Input resistance	1 MΩ (3 kΩ during power failure)	
External input resistance	500 Ω or less	
Allowable input voltage and current	–0.5 to 4 V DC	
Input linearizer	Not provided	Provided
Rated accuracy of conversion to 1 to 5 V output	±0.2% of span	±0.2% of span or ±20 μV in input equivalent, whichever is larger
Reference junction compensation (RJC)	—	±1°C or less (*1)

*1: RJC is not performed for a Type B element. Except for Type B, if the measured temperature is below 0°C, then the error is the product of the value above multiplied by the following constant K: K = (emf per 1°C at around 0°C)/(emf per 1°C at the measured temperature)

Item	RTD	Potentiometer
Option code	/A03	/A04
Input signal	Pt100(IPTS-68:JIS '89), JPt100(JIS '89), Pt100(ITS-90: JIS '97), Pt50(JIS '81) 3-wire measurement current: 1mA	Three-wire potentiometer
Measurable span	10 to 650°C (Pt100)10 to 500°C (JPt100)	Total resistance: 100 to 2000 Ω Span: 80 to 2000 Ω
Zero elevation of measurement range	Within 5 times the span	Within 50% of the total resistance
Measurement range	Can be modified via an engineering display.	
External input resistance	10 Ω or less per wire (*2)	10 Ω or less per wire
Input linearizer	Provided	Not provided
Rated accuracy of conversion to 1 to 5 V output	±0.2% of span or ±0.2°C, whichever is larger	±0.2% of span

*2: 10 Ω per wire, or (temperature measurement span) x 0.4 Ω, whichever is smaller.

Note: There is no difference between the latest and the previous temperature tables as far as applying them to the YS1000.
- TC: Latest version; IEC60584-1: 2013/JIS C1602:2015
  Previous version; IEC60584-1: 1995/JIS C1602:1995
- RTD Latest version; IEC60751- 2008/JIS C1604:2013
  Previous version; IEC751- 1995/JIS C1604:1997

Item	Input Isolator	Two-wire Transmitter or Non-isolated 2-wire transmitter Input
Option code	/A05	/A06 or /A07
Input signal	1 to 5 V DC	4 to 20 mA DC from transmitter (with its power supplied from the YS1700)
Input resistance	1 MΩ (100 kΩ during power failure)	250 Ω
External input resistance	—	RL = (20 – [minimum working voltage of transmitter])/0.02 A (Ω) or less
Allowable input voltage or current	±30 V DC	40 mA DC
Input linearizer	Not provided	
Rated accuracy of conversion to 1 to 5 V output	±0.2% of span or less	

Item	Frequency Input
Option Code	/A08
Input signal	Two-wire contact, voltage pulse, or current pulse (can supply transmitter power) Three-wire voltage pulse with transmitter power supply
Input frequency	0 to 10 kHz (0 to 10 Hz when the input filter is set to ON.)
100% frequency	0.1 to 10 kHz (0.1 to 10 Hz when the input filter is set to ON.)
Zero elevation	0 to 50% of 100% input frequency
Measurement range	Can be modified via an engineering display.
Low-input cutoff level	Can be set to a level from 0.01 Hz (or 1% of maximum frequency) to 100%
Minimum input pulse width	On: 60 μs Off: 60 μs (input frequency from 0 to 6 kHz) On: 30 μs Off: 30 μs (input frequency from 6 to 10 kHz)
Input signal level	Contact input: Relay or transistor input Open-close detection levels: Open if 100 kΩ or larger, closed if 200 Ω or less Contact capacity: 15 V DC, 15 mA or larger Voltage/current pulse input: Low if –1 to +8 V; High if +3 to +24V Pulse height: 3 V or higher (input frequency from 0 to 6 kHz), 5 V or higher (input frequency from 6 to 10 kHz)
Internal load resistance (for current pulse)	Can be selected from 200 Ω, 500 Ω, and 1 kΩ (to be specified upon ordering).
Input filter	Whether to enable 10 ms filter for a no voltage contact can be selected (to be specified upon ordering).
Transmitter power supply	Can be selected between 12 V DC, 30 mA and 24 V DC, 30 mA (to be specified upon ordering).
Rated accuracy of conversion to 1 to 5 V output	±0.2% of span or less

All Rights Reserved. Copyright © 2014, Yokogawa Electric Corporation

■ SAFETY COMPLIANCE

Item	Compliance	Remarks
General safety standards	Compliant with IEC/EN 61010-1, IEC/EN 61010-2-201, IEC/EN 61010-2-030 Overvoltage category: II Pollution Degree: 2 Measurement category: O (other) Rated voltage to earth of measuring circuit terminal: 33 V ACrms (50/60 Hz) or 70 V DC Compliant with CAN/CSA-C22.2 No. 61010-1, CAN/CSA-C22.2 No. 61010-2-030, and CAN/CSA-C22.2 No. 61010-2-201 Overvoltage category: II Pollution Degree: 2 Measurement category: O (other)	Only for the models with suffix code -x0x, -x1x, or -x2x. For suffix code: -x0x or -x1x, and /CSA option, compliant with CSA.
EMC standards	EN 61326 Class A EN 55011 Class A Group 1 EN 6100-3-2 EN 6100-3-3 Note: The unit under testing can continuously work with accuracy within ±20% of the range throughout the test. EMC Regulatory Arrangement in Australia and New Zealand (RCM): EN 55011 Class A Group 1 compliant KC: Electromagnetic wave interference prevention standard, electromagnetic wave protection standard compliance	Only for the models with suffix code -x0x, -x1x, or -x2x. For suffix code: -x0x, -x1x, -x2x-, x3x, or -x4x, compliant with KC marking.
Approval for use in hazardous areas	FM nonincendive: FM 3600:2011 FM 3611:2004 FM 3810:2005 Locations: Class I, Division 2, Groups A,B,C and D Temperature Code: T4 CSA nonincendive: CSA C22.2 No. 213-17 Locations: Class I, Division 2, Groups A,B,C and D Temperature Code: T4	For suffix code: -x0x or -x1x and /FM or /CSA options, Nonincendive electric device usable in hazardous area.

Please select appropriate equipment in accordance with the laws and regulations of the relevant country/region, when it is used in a location where explosive atmospheres may be present.

Precautions for Safety Compliance ⚠

1. An internal unit, if used alone, cannot comply with the safety standards. Only a complete set of an internal unit housed in a safety-compliant case or a safety-compliant housing, is compliant with the safety standards listed above.
2. The following actions that involve removal and re-installation of the internal unit from/in the case, required safety checks mandated by the IEC/EN 61010-1 safety standard. These actions must be performed by a Yokogawa engineer or Yokogawa-authorized technician, and tests for safety checks (such as a withstanding voltage test) must be performed. When the user carries out any one of these actions at own responsibility, the safety-compliance is lost.
   (1) Removing the internal unit from the case or re-installing the internal unit in the case or housing.
   (2) Replacing or installing the power supply unit, display unit, or option board.
   (3) Changing the setup switch positions on the main board or option board.
   (4) Any other maintenance or repair work to detach the internal unit from the case.

■ ENVIRONMENT STANDARD

EU RoHS directive: EN IEC 63000
(The /A08 option is excluded.)

All Rights Reserved. Copyright © 2014, Yokogawa Electric Corporation

■ FUNCTION BLOCK DIAGRAM

(1) Programmable Mode

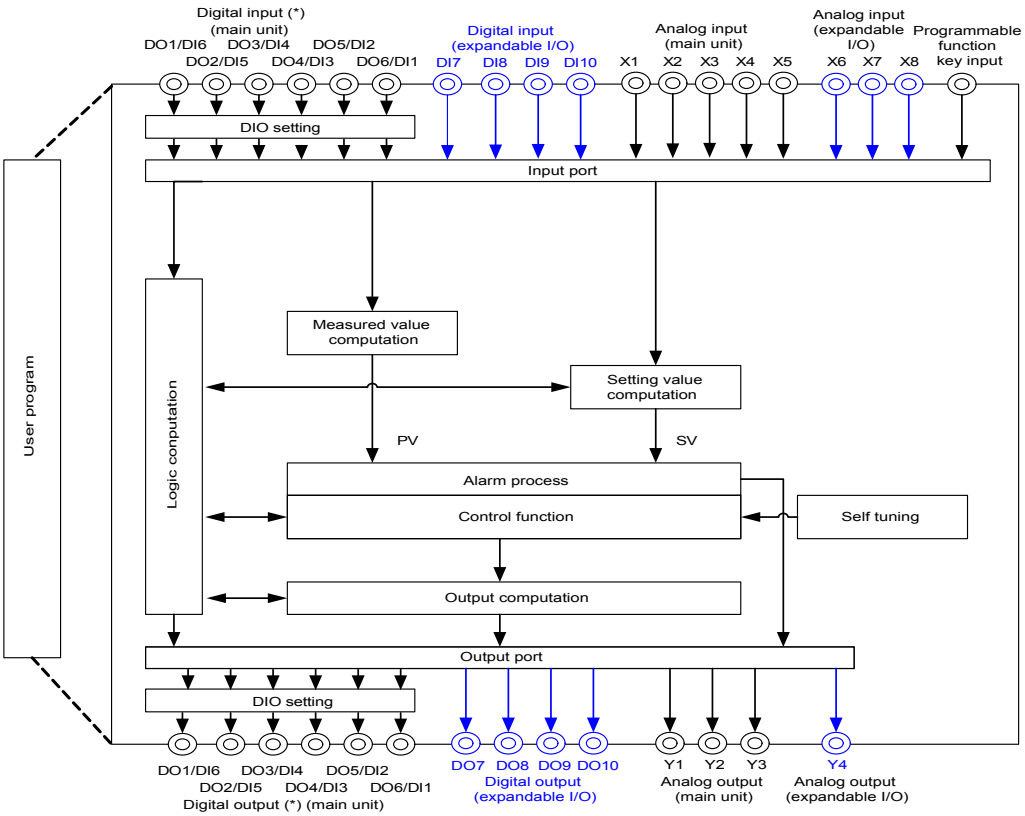

*:Didital inputs and outputs are selectable

All Rights Reserved. Copyright © 2014, Yokogawa Electric Corporation

(2) Function Selection Mode: Single-loop Mode

The diagram below shows the default DI/O1 to 6 selection, function, and analog output (Y2 to 4) settings (can be modified by changing the parameters).

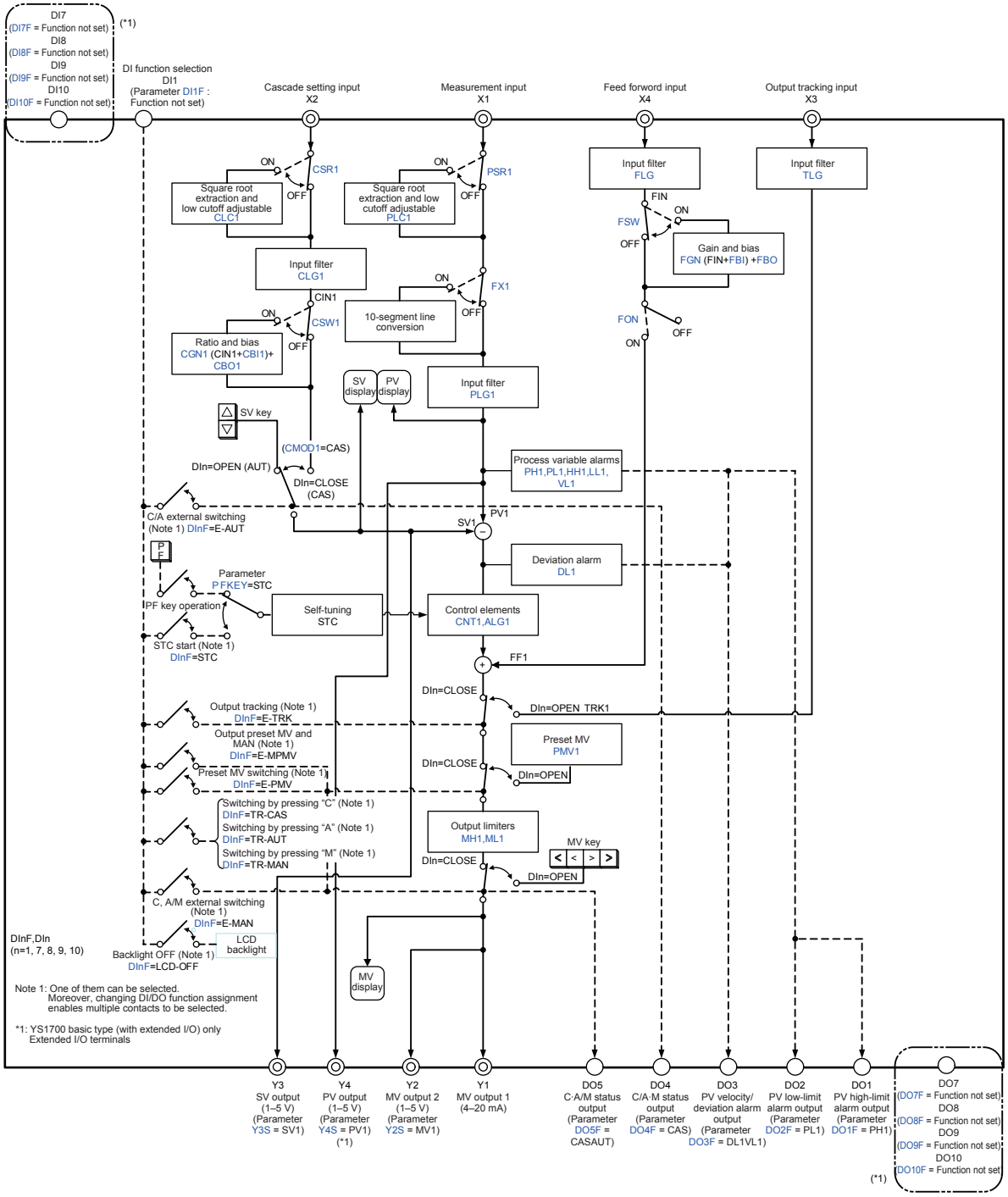

(3) Function Selection Mode: Cascade Mode

The diagram below shows the default DI/O1 to 6 selection, function, and analog output (Y2 to 4) settings (can be modified by changing the parameters).

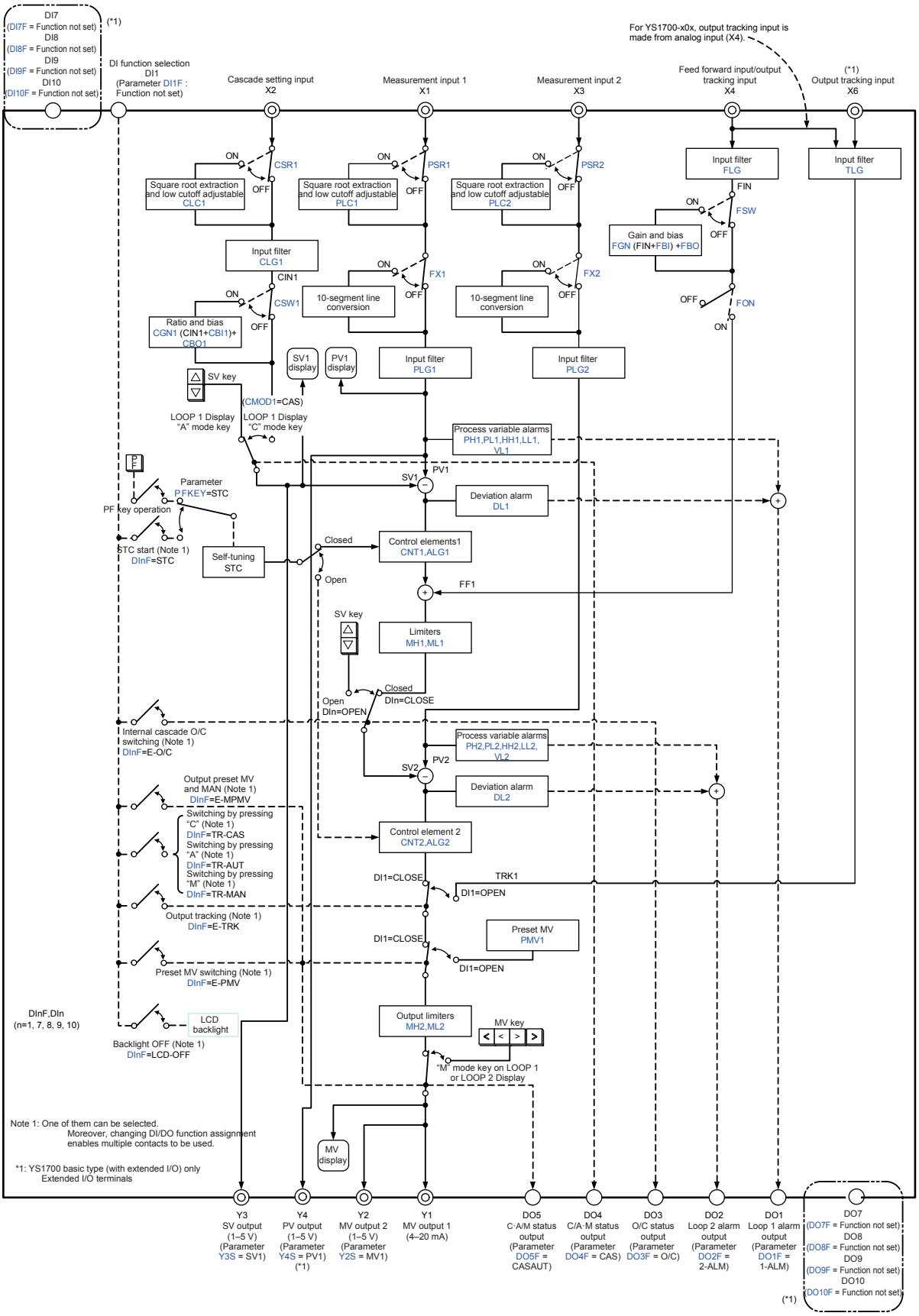

All Rights Reserved. Copyright © 2014, Yokogawa Electric Corporation

(4) Function Selection Mode: Selector Mode

The diagram below shows the default DI/O1 to 6 selection, function, and analog output (Y2 to 4) settings (can be modified by changing the parameters).

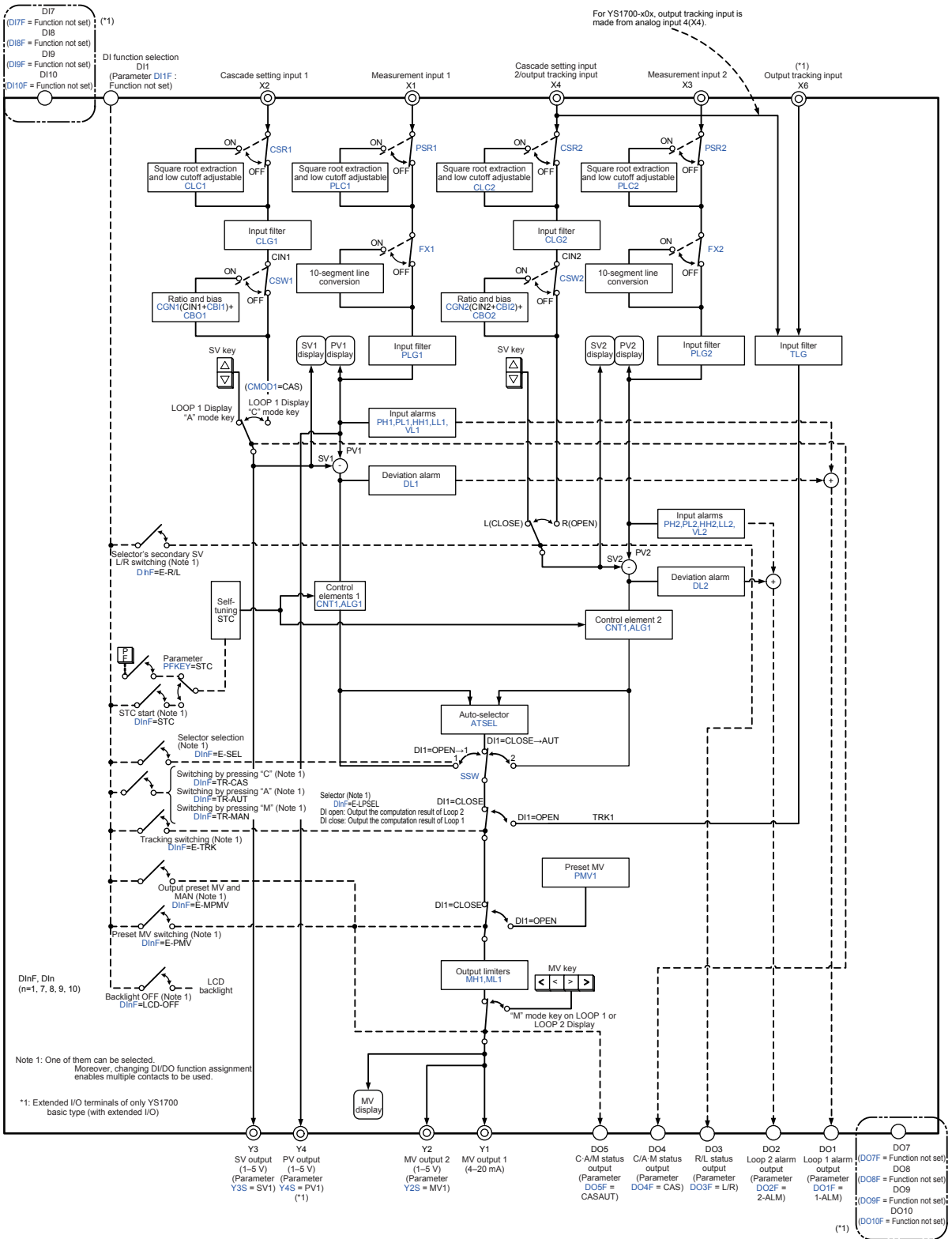

■ Terminal Layout (Basic type)

Terminal No.	Programmable mode	Single-loop mode	Cascade mode	Selector mode
1	+ Analog input 1	+ PV	+ PV1	+ PV1
2	– (1-5V DC)	– (1-5V DC)	– (1-5V DC)	– (1-5V DC)
3	+ Analog input 2	+ Cascade setting input	+ Cascade setting input	+ Cascade setting input 1
4	– (1-5V DC)	– (1-5V DC)	– (1-5V DC)	– (1-5V DC)
5	+ Analog input 3	+ Tracking input	+ PV2	+ PV2
6	– (1-5V DC)	– (1-5V DC)	– (1-5V DC)	– (1-5V DC)
7	+ Analog input 4	+ Feedforward input	+ Feedforward input	+ Cascade setting input 2
8	– (1-5V DC)	– (1-5V DC)(*6)	– (1-5V DC)(*6)	– (1-5V DC)(*7)
9	+ Analog input 5	+ Direct input signal	+ Direct input signal	+ Direct input signal
10	– (1-5V DC)(*1)	– output (*1)	– output (*1)	– output (*1)
11	+ Fail output	+ Fail output	+ Fail output	+ Fail output
12	–	–	–	–
13	Transmitter Power supply (24V DC)(*2)	Transmitter Power supply (24V DC)(*2)	Transmitter Power supply (24V DC)(*2)	Transmitter Power supply (24V DC)(*2)
14	Communication SG	Communication SG	Communication SG	Communication SG
15	Communication SDA (–)	Communication SDA (–)	Communication SDA (–)	Communication SDA (–)
16	Communication SDB (+)	Communication SDB (+)	Communication SDB (+)	Communication SDB (+)
17	Communication RDA (–)or LCS (+)	Communication RDA (–)or LCS (+)	Communication RDA (–)or LCS (+)	Communication RDA (–)or LCS (+)
18	Communication RDB (+)or LCS (–)	Communication RDB (+)or LCS (–)	Communication RDB (+)or LCS (–)	Communication RDB (+)or LCS (–)
19	+	+	+	+
20	– Direct input (*3)	– Direct input (*3)	– Direct input (*3)	– Direct input (*3)
21				
22	+ Analog output 1	+ MV1	+ MV1	+ MV1
23	– (4p20mA DC)	– (4p20mA DC)	– (4p20mA DC)	– (4p20mA DC)
24	+ Analog output 2	+ MV2 (*5)	+ MV2 (*5)	+ MV2 (*5)
25	– (1-5V DC)	– (1-5V DC)	– (1-5V DC)	– (1-5V DC)
26	+ Analog output 3 (*4)	+ SV (*5)	+ SV (*5)	+ SV (*5)
27	– (4p20mA DC/1-5V DC)	– (1-5V DC)	– (1-5V DC)	– (1-5V DC)
28	+ Digital output 1 or	+ PV1 high limit alarm	+ First loop alarm output	+ First loop alarm output
29	– Digital input 6	– output (*5)	–	–
30	+ Digital output 2 or	+ PV1 low limit alarm	+ Second loop alarm output	+ Second loop alarm output
31	– Digital input 5	– output (*5)	–	–
32	+ Digital output 3 or	+ Deviation alarm output	+ O/C status output	+ L/R status output
33	– Digital input 4	– (*5)	–	–
34	+ Digital output 4 or	+ C/A·M status output	+ C/A·M status output	+ C/A·M status output
35	– Digital input 3	– (*5)	–	–
36	+ Digital output 5 or	+ C·A/M status output	+ C·A/M status output	+ C·A/M status output
37	– Digital input 2	– (*5)	–	–
38	+ Digital output 6 or	+ Action mode switching	+ Action mode switching	+ Action mode switching
39	– Digital input 1	– input (*5)	– input	– input
L	+ Power supply	+ Power supply	+ Power supply	+ Power supply
N	–	–	–	–
G	Ground (GND)	Ground (GND)	Ground (GND)	Ground (GND)

(*1)If direct input (optional specifications) is provided, analog input 5 becomes direct input signal output.
(*2)For connecting two wire transmitters: see “Connection of Transmitter Power Supply” described later.
(*3)For direct input connection: see “Direct Input Wiring” described later.
(*4)Analog output 3 can be changed by engineering parameter. Initial value: 1 to 5 V DC
(*5)These settings are default. They can be changed by parameters.
(*6)If feedforward input is not used, the terminals can be used for output tracking input.
(*7)If cascade setting input 2 is not used, the terminals can be used for output tracking input.

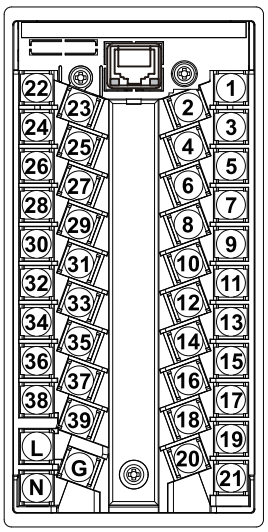

All Rights Reserved. Copyright © 2014, Yokogawa Electric Corporation

Direct Input Terminals

		Terminal number		
		19	21	20
mV input (optional code /A01) Isolator (optional code /A05)		+		-
Thermocouple input (optional code /A02)		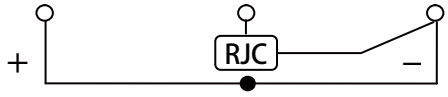		
RTD input (optional code /A03)		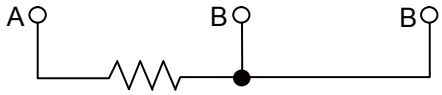 Match the wiring resistances of terminals 19 and 21 with each other.		
Potentiometer input (optional code /A04)		 Match the wiring resistances of terminals 19 and 20 with each other.		
Frequency input (optional code /A08)	Two-wire type (voltage, contact)	+		-
	Power feed type, two-wired	Signal	Power Supply	
	Power feed type, three-wired	+	Power Supply	-
Two-wire transmitter input (optional code /A06, /A07)	Supply voltage required	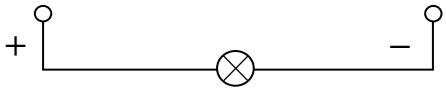		
	Case of 4 to 20 mA signal not requiring supply power	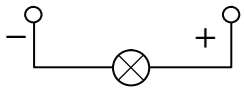		

Expandeble I/O Terminal Diagram

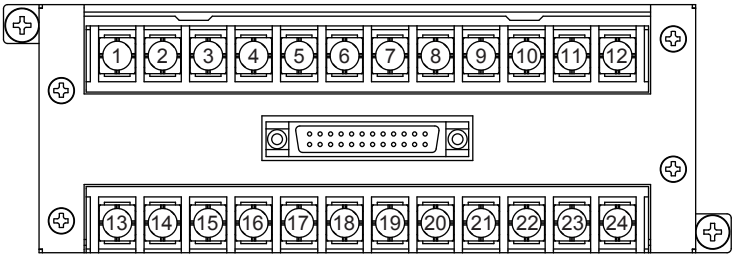

Connection of Transmitter Power Supply

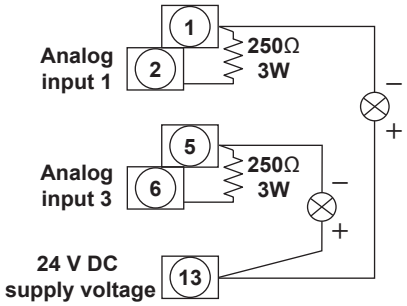

Terminal number		Expandable I/O Terminal
1 2	+ -	Analog input 6
3 4	+ -	Analog input 7
5 6	+ -	Digital input 7
7 8	+ -	Digital input 8
9 10	+ -	Digital input 9
11 12	+ -	Digital input 10

Terminal number		Expandable I/O Terminal
13 14	+ -	Analog input 8
15 16	+ -	Analog output 4 (1 to 5VDC)
17 18	+ -	Digital output 7
19 20	+ -	Digital output 8
21 22	+ -	Digital output 9
23 24	+ -	Digital output 10

All Rights Reserved. Copyright © 2014, Yokogawa Electric Corporation

■ DIMENSIONS (Basic Type)

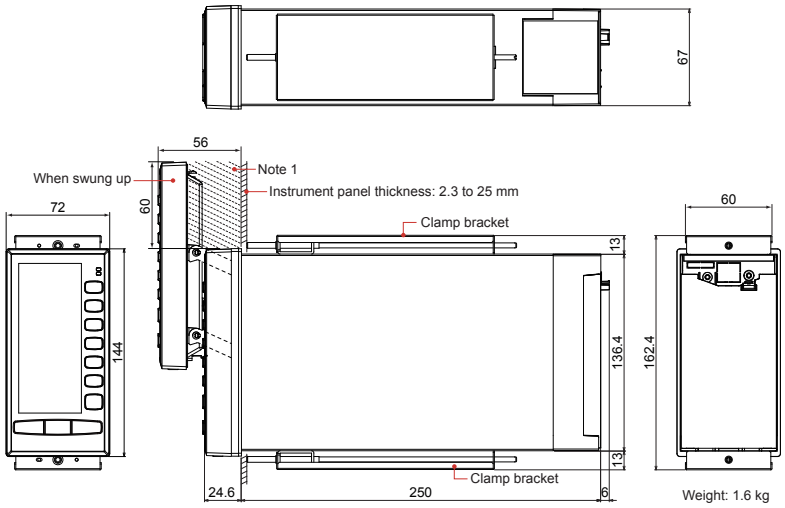

Pane Cutout Dimensions

For single mounting:

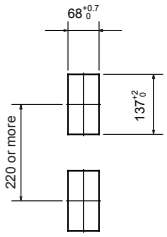

For side-by-side mounting:

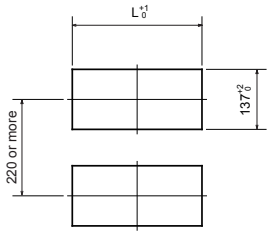

Panel Cutout Width for Side-by-side Mounting

Number of instruments to be mounted	L(mm)
2	140
3	212
4	284
5	356
6	428
7	500
8	572
9	644
10	716
11	788
12	860
13	932
14	1004

Trigonometry
Unit: mm
General tolerance = ±(value of tolerance class IT18 based on JIS B 0401-1998) / 2

Note 1: If a nameplate, etc. is installed within 60 mm above the instrument, the height of the nameplate, etc. must be 30 mm or less from the panel surface.
Note 2: To ensure good air ventilation, allow space of 100 mm or more at the top and bottom of the panel.
Note 3: For the YS100 compatible type, YS80 internal unit compatible type, EBS, I, EK, and HOMAC compatible types, YS80 compatible type, and 100 Line compatible type, refer to the relevant separate outline view.

0908E.ai

Basic Type with Expandable I/O

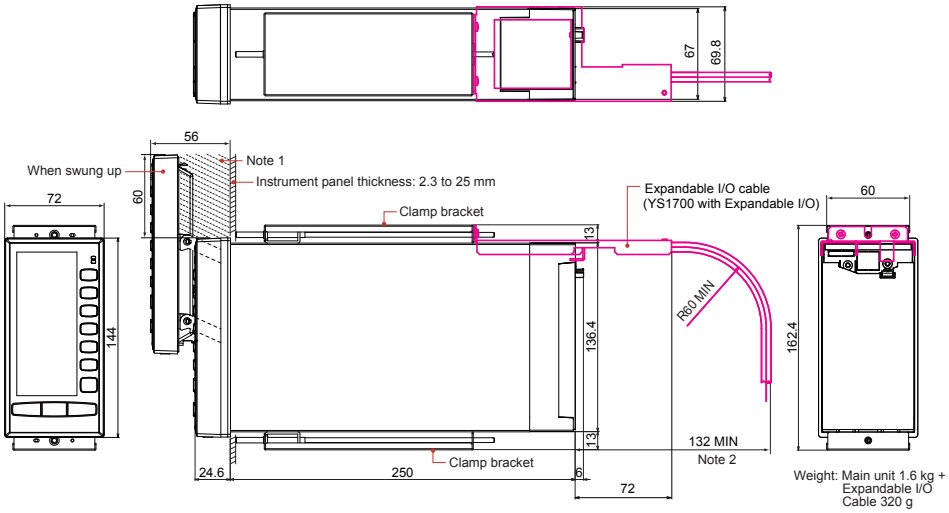

Note 1: If a nameplate, etc. is installed within 60 mm above the instrument, the height of the nameplate, etc. must be 30 mm or less from the panel surface.

Note 2: When installing the expandable I/O cable, secure the wiring space of at least 60 mm for a minimum curvature radius of the cable in addition to the mountiing bracket space of 72 mm from the terminal cover face of the main unit.

All Rights Reserved. Copyright © 2014, Yokogawa Electric Corporation

Expandable I/O Terminal Block

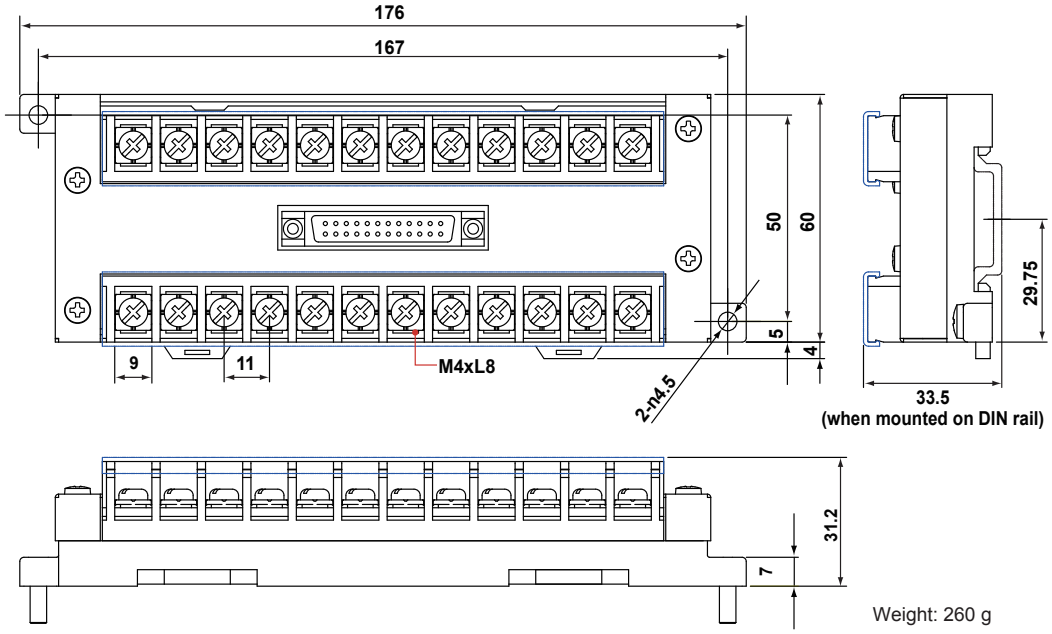

Weight: 260 g

Expandable I/O Cable

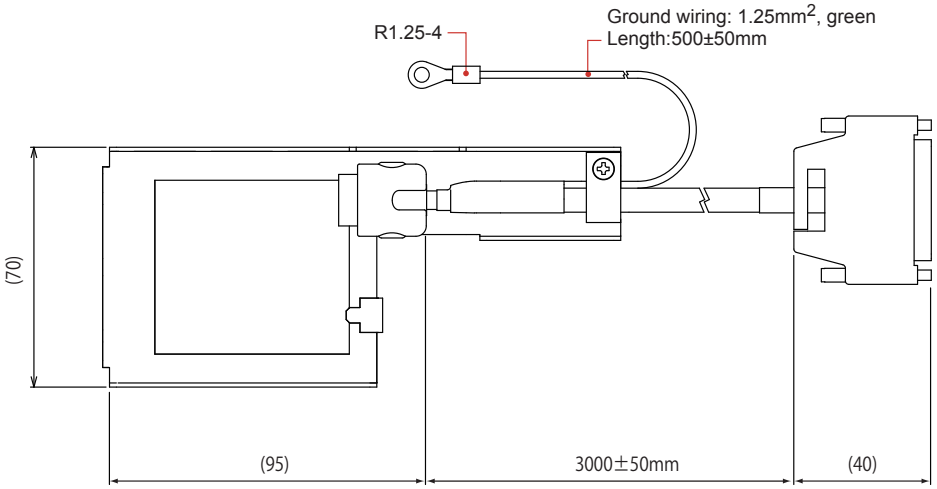

Weight: 320g

■ STRUCTURE, MOUNTING (Basic type)

Item		Specification
Case protection class		Dust- and splash-proof (IP54-compliant) faceplate Note: Not applicable in side-by-side multi-unit installation or compatible types.
Mounting		Indoor panel mounting
Panel mounting device		Mounting brackets to be used (at the top and bottom).
Panel cutout		137+2 × 68+0.7 mm
Wiring terminals	Signal wirings	M4 screw terminals
	Power supply and ground terminals	M4 screw terminals
Dimensions		144 × 72 × 250 mm (H x W x D from panel plate)
Weight		1.6 kg

All Rights Reserved. Copyright © 2014, Yokogawa Electric Corporation

■ Model and Suffix Codes

Model	Suffix Code	Optional Code	Remarks
YS1700			Programmable indicating controller
Use	-1		With hard manual unit
	-2		Without hard manual unit
Type	0		Basic type
	1		Basic type with expandable I/O (*1)
	2		Compatible type for YS100 (with YS100 case)
	3		Compatible type for YS80 internal unit/compatible type for EBS, I, EK, and HOMAC (*2)
	4		Compatible type for YS80 (compatible size for YS80 with YS100 terminal)
	5		Compatible type for 100 line (with YS100 terminal) (*3)
Power supply	0		100 V AC, 24 V DC common power
	1		220 V AC power
Direct input (*4)		/A01	mV input
		/A02	Thermocouple input
		/A03	RTD input
		/A04	Potentiometer input
		/A05	Isolator
		/A06	Two-wire transmitter input (isolated)
		/A07	Two-wire transmitter input (non-isolated)
		/A08	Frequency input (*10)
		/DF	Direct input with Fahrenheit temperature range function (*9)
Communication		/A31	RS-485 communication (PC-link, Modbus, YS protocol, and Peer-to-Peer communication) (*5)
		/A32	DCS-LCS communication (*6)
		/A34	Ethernet communication (Modbus/TCP) (*7)
Certification		/FM	FM nonincendive approved (FM Class I, DIV 2) (*8)
		/CSA	CSA safety and nonincendive approved (Class I, DIV 2) (*8)

*1 The expandable I/O terminal (model YS010) and expandable I/O cable (model YS011) (cable length: 3 m) are provided.
*2 This type can be connected to the YS80 housing (model SHUP). (The EK/HOMAC compatible housing (SHUP-420) and EBS/I series-compatible housing (SHUP-100) are sold separately.)
*3 The 100 line-compatible housing (model YS006) is sold separately.
*4 Direct input options can be combined only with the suffix codes “-x2x,” “-x4x,” or “-x5x.” Selection of multiple options is not possible.
*5 A combination with suffix code “-x3x” is not possible. Optional codes /A31 and /A32 cannot be simultaneously specified.
Please specify the communication options /A31 (RS-485 communication) to directly communicate with the CENTUM CS3000/VP.
*6 Optional codes /A31 and /A32 cannot be simultaneously specified. Please specify the communication options /A32 (DCS-LCS communication) to communicate with the CENTUM CS3000/VP through the SCIU.
*7 Optional codes /A34 can be specified only for suffix codes “-x0x” or “-x1x.”
*8 This option can be combined only with suffix codes “-x0x” or “-x1x.”
*9 This option can be combined only with option code /A02 or /A03.If option code /DF is specified, Fahrenheit temperature range can be available for direct input range in addition to Centigrade temperature range. In case of specifying Fahrenheit temperature range for direct input, option code /DF is required. When the direct input temperature range may be changed to Fahrenheit temperature range after shipment, also specify option code /DF.
*10 When option code /A08 is specified, the conformity to CE marking is excluded.

All Rights Reserved. Copyright © 2014, Yokogawa Electric Corporation

■ Items to Be Specified at the Time of Ordering

Model, suffix code, and optional codes, when necessary, are required to be specified.

Each customer can specify one tag number for the 12 alphanumerical symbols to be used on the main rating plate.

Direct input spec can be specified (only for the optional codes listed in the table below).

Optional Code	Item to Be Specified
/A01	Measurement range, Burnout
/A02	Thermocouple's compliance standard and type, Measurement range, Burnout
/A03	Resistance temperature detector's compliance standard, type, and resistance value at 0°C. Measurement range, Burnout
/A04	Total resistance, 0% resistance, 100% resistance, Burnout
/A08	Measurement range, Transmitter power supply (12 VDC/24 VDC), Input filter (ON/OFF), Current pulse load resistance (200 Ω, 500 Ω, 1 kΩ)

■ Accessories

Item Name	Part Number/ Model	Q'ty	Remarks
Metal clamps	L4041RA	2	For YS1700-x0x and YS700-x1x
	E9760RJ	2	For YS1700-x2x
	E9760RN	2	
	E9760RJ	1	For YS1700-x4x
	E9760RP	1	
Tag plate seals	-	4	50 × 3.5 mm
Range entry seals		4	34 × 2 mm
Expandable I/O terminals	YS010	1	Available only for YS1700-x1x
Expandable I/O cables	YS011-03	1	Cable length: 3 m Supplied with YS1700-x1x
RJC sensor	L3501RA	1	Available only for products with optional code /A02
Ferrite core	A1179MN	1	For direct input cable (Supplied with products with optional code /A0x.)
M4 screw with spring washer	Y9408JH	42	For YS1700-x0x and YS700-x1x
YS1500/YS1700 Operation Guide	-	1	A4 size

* Product user's manuals can be downloaded or viewed at the following URL. To view the User's Manuals, use Adobe Acrobat Reader of Adobe Systems Incorporated.
https://www.yokogawa.com/ns/ys/im/

■ Accessories (sold separately)

Product name	Model	Remarks
SHUP standard housing	SHUP-000	Available for YS1xx0-x3x (Replace for YS80 Series)
SHUP long housing	SHUP-100	Available for YS1xx0-x3x (Replace for I Series or EBS Series)
SHUP EK/HOMAC housing	SHUP-420	Available for YS1xx0-x3x (Replace for EK or HOMAC Series)
100 Line pneumatic instrument replace housing	YS006	Available for YS1xx0-x5x (Replace for 100 Line pneumatic instrument)
120 Ω terminating resistor(*11)	YS020	For RS-485 communication
250 Ω shunt resistor	YS021	For a built-in 24 V transmitter power supply

*11 The YS1700 has a built-in terminating resistor, which can be selected for use by setting the relevant parameter. If a terminating resistor is used in another device at the termination of the same communication system, an external terminating resistor needs to be provided to match the terminating resistance of the YS1700's built-in terminating resistor.

■ Selection of Explosion Protected Equipment

Please select appropriate equipment in accordance with the laws and regulations of the relevant country/region, when it is used in a location where explosive atmospheres may be present.

■ Basic Conditions and Individual Contracts at the Time of Purchase

The warranty for this product is defined in the basic conditions and individual contracts at the time of purchase. The individual conditions are as follows.

- **Warranty period of firmware**
  The warranty conditions for the firmware installed in this products are same as that of the hardware.

All Rights Reserved. Copyright © 2014, Yokogawa Electric Corporation
Subject to change without notice.