Model HT378B02

ICP Microphone System

Installation and Operating Manual

For assistance with the operation of this product,
contact the PCB Piezotronics, Inc.

Toll-free: 716-684-0001
24-hour SensorLine: 716-684-0001
Fax: 716-684-0987
E-mail: info@pcb.com
Web: www.pcb.com

PRODUCT GUIDE
377 SERIES MICROPHONES
426 SERIES PREAMPLIFIERS

Contents:

1.0 Introduction 1
2.0 Standards 1
3.0 Setting up a Microphone Measurement System 1
4.0 Taking Measurements 3
5.0 Accessories and Miscellaneous 3
6.0 Maintenance 4
7.0 Calibration 5
8.0 Warranty and Service 5

1.0 Introduction

Thank you for your purchase of a PCB high quality microphone. These microphones offer highly accurate and reliable acoustic measurements and are typically used in research and design applications. They are accurate enough for laboratory usage, yet rugged enough for field-testing.

Sound within the typical 20 to 20,000 Hz audible range of a healthy human ear can either be pleasing to the ear, as in music, or unpleasant (or harmful), as in noise. As a result, many applications, from the development of consumer products to research in acoustics, measure sound, even sound outside the range of human hearing. The instrument typically used to measure sound is the microphone, which is designed, like the human ear, to transform pressure oscillations into a corresponding voltage oscillation.

2.0 Standards

Before selecting an acoustical instrument, it is important to identify which acoustical standards are appropriate for the application in which the instrument will be used. Whether for legal purposes or for quality assurance programs, these standards will help determine the required quality, accuracy and consistency of the instrument. Standards that correspond to the performance requirements, dimensions and characteristics of acoustical components are established for microphones, sound level meters, calibrators, or other related components. The most common organizations producing these standards are the American National Standards Institute (ANSI) and the International Electrotechnical Commission (IEC). IEC 1094-4 establishes specifications for the mechanical dimensions and certain electroacoustic characteristics for standard industrial microphones. The performance specification sheet supplied with each PCB microphone identifies the standards to which the microphone is compliant.

3.0 Setting up a Microphone Measurement System

After the proper microphone has been selected, the corresponding preamplifier, cabling, power supplies, signal conditioning and data acquisition selections are ready to be installed. Not all of these components are required for all test set-ups. The figures below show typical set-ups for externally polarized and prepolarized microphone systems.

A prepolarized microphone can be used with a standard Microphone Power Supply designed for externally polarized microphones, and its preamplifier, provided the supply voltage is set to zero.

Phantom powered microphone systems use a 3 pin XLR connector. A phantom powered microphone system should use a 48V phantom power supply or signal conditioner for optimum performance; however these microphone systems may be powered with a 24V or a 12V phantom power supply, but this will limit the maximum output voltage.

Externally Polarized Microphone System

Prepolarized Microphone System

Phantom Powered Microphone System

The phantom powered preamp may be used with either a ¼'' or a ½'' microphone cartridge by using the adapter provided. All IEC 61094-4 compliant microphones can be used with the phantom powered preamp.

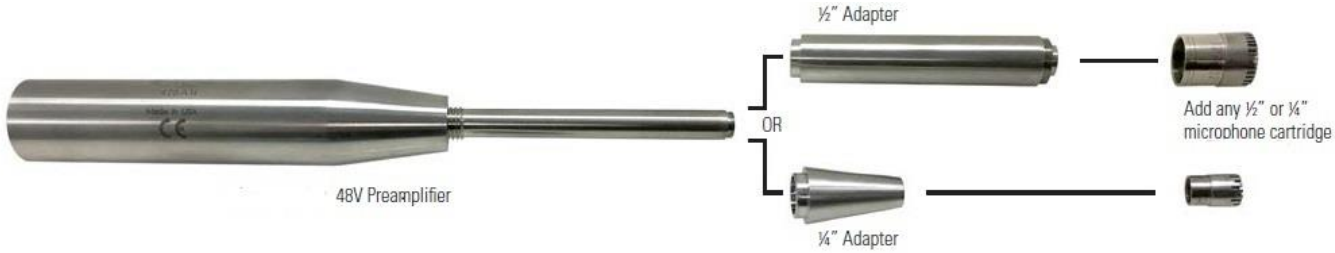

Adapters for Phantom Powered Preamp

4.0 Taking Measurements

The following formula is used to calculate the pressure measured by the microphone from the output voltage signal. The sensitivity of a microphone is typically measured at 250 Hz.

Pressure (Pa) = Voltage (mV) / Sensitivity (mV/Pa).

The lowest amplitude a healthy human ear can detect is 20 millionths of a Pascal (20μPa). Another scale more commonly used to describe sound pressure level is the decibel (dB). To convert the output voltage signal (measured in Vrms) to sound pressure level (measured in decibels), use the following formula:

$$SPL = \left(20 \operatorname{Log} \left(\frac{V_{rms}}{S\, P_{ref}} \right) \right) dB$$

where S is the sensitivity of the microphone in mV/Pa, and P_{ref} is the reference pressure in air, which is 20 x 10^{-6} Pa. The decibel scale is logarithmic and more closely matches the response reactions of the human ear to the pressure fluctuations. Some examples of typical sound pressure levels are shown in the table below.

dB	Pressure	Example
0	0.00002 Pa	Threshold of Hearing
60	0.02 Pa	Business Office
80	0.2 Pa	Shop Noise
94	1 Pa	Large Truck
100	2 Pa	Jackhammer
120	20 Pa	Airplane Take-Off
140	200 Pa	Threshold of Pain

At very high-pressure amplitudes, the microphone's diaphragm will start to distort the measured sound pressure. The maximum rated sound pressure level of a microphone is expressed as the amplitude at which the Total Harmonic Distortion (THD) reaches a specified amount, typically 3% THD. It is important to note that the highest sound pressure level that can be measured with a microphone system may be limited by other parts of the system, such as the preamplifier, signal conditioner, or instrumentation. Conversely, the Cartridge Thermal Noise (CTN) specification provides the lowest measurable sound pressure level that can be detected above the electrical noise inherent within the microphone.

Temperature and pressure will affect the sensitivity of a microphone but these effects can be accounted for by adjusting the recorded microphone values using the coefficients specified for each microphone model. Simply calculate the difference in temperature and ambient pressure from those recorded during calibration and multiply this value by the proper coefficient to determine the sensitivity offset. In most cases, the offset will be very small and is therefore unnecessary.

5.0 Accessories & Miscellaneous

Transducer Electronics Data Sheet (TEDS)

Preamplifiers can incorporate TEDS devices, which have a built in read/write memory that contains relevant information about the sensor and its use. Information includes manufacturer name, model number, serial number, sensitivity, etc. The operation of TEDS devices is defined by IEEE P1451.4. A TEDS microphone system includes a microphone mated with a preamplifier that contains the TEDS memory programmed with both the microphone and preamplifier information. This is particularly helpful when using large channel count systems and array set-up.

A-Weight Inline Filter

The inline filter is used in conjunction with an ICP® preamplifier to provide A-weighting for acoustical measurements. The filter's frequency response is weighted according to the A-weighting filter portion of both ANSI S1.4 and IEC 60651 Type 1 Sound Level Meter Standards. ICP® signal conditioners of 4 mA or greater are recommended when using inline filters.

Windscreens and Nose cones
Wind induced noise can be reduced by using a windscreen. This can offer some protection against dust particles and mechanical damage. In the presence of high-speed airflow from a well-defined direction, such as wind tunnels, a nose cone is recommended. When using windscreens and noise cones, the frequency response of the microphone will be attenuated at higher frequencies.

Clamps and stands
When holding a microphone in place, it is important to minimize the influence of the stand on the sound being measured. This can be accomplished by using low profile stands and clamps available from PCB.

Cables and Electronics
PCB carries LEMO® cables as well as coaxial cables with BNC and 10-32 connectors. Traditional externally polarized microphone power supplies along with a variety of ICP® signal conditioners are available that will fit almost any need.

6.0 Maintenance

Microphones are very stable over long periods of time, provided they are handled and stored properly. The microphone contains fragile components that can be damaged by misuse, in particular the diaphragm, which is made up of a very thin proprietary material and should be kept clean of dust, dirt, moisture and free any type of imperfection (scratch, dent, etc.).

The microphone's grid cap is designed to let the true sound pressure level through to the diaphragm while preventing items from coming in contact with it. We do not recommend that you ever remove the grid cap or clean the microphone. If you take the precautionary measures to keep the microphone clean and dry, it should not be necessary. Should you need to remove the grid cap to replace it with PCB's enhanced rugged grid cap (shown below, and as an independent part of a rugged kit) to extend the lifespan of the precision measuring device, caution should be taken to ensure the delicate diaphragm sensing element remains untouched and safe.

Use of accessories, like windscreens, and desiccants will help keep moisture off the microphone and maintain the specified sensitivity level. Nose cones will help keep turbulence off the microphone diaphragm and allow the sound pressure to be measured with greater accuracy.

Keep the microphone and preamplifier assembled while preparing for testing. Keep the rubber maintenance caps on the preamplifier's electrical connector only. Do not place these rubber caps over the microphone. This will create a vacuum and undo pressure on the microphone diaphragm, which can stretch the diaphragm and cause a change in sensitivity. Store the microphones and preamplifiers in their protective cases when not in use.

Dust, rain, oil, moisture or exposure to extreme temperatures may adversely affect the microphone and preamplifier's performance. If the microphone or the inside of the connection area of the preamplifier becomes contaminated, use a light pressure rubber bulb to gently blow clean, dry air onto the unit in order to remove the dust. In the event that you absolutely must take off the grid cap and clean the microphone diaphragm, we recommend using a blow bulb or a light pressure, clean and dry air hose to gently blow contamination off the diaphragm. The direction of the air should be parallel with the diaphragm, not directly (0 degree incidence) pointed at the diaphragm. Do not touch the microphone's diaphragm with your fingers or let it come in contact with any sharp or pointed object. Please note that any contact to the microphone's diaphragm can negatively impact the sensitivity and long term stability of the microphone.

If the microphone is ever dropped (the effects of this can be minimized by PCB's rugged grid cap or utilizing rugged microphone kits), or comes into contact with any contamination, or is exposed to extreme temperatures, immediate recalibration of the microphone should be performed. When using a rugged grid cap, a handheld calibrator with a 1" diameter (example CAL250, or pistonphone) is required for recalibration, along with the larger (079A59) calibration adapter. Please note that heat from your hands can affect the calibration results. It is always good practice to wait a minimum of 30 seconds after placing the microphone on a test system before taking a calibration reading in order to minimize the effect that heat from your hands has on the calibration. Changes in the environmental conditions: temperature, humidity or atmospheric pressure, may cause a change in your microphones sensitivity and thus, changes in your output accuracy. It is always recommended to calibrate both before and after your test, within the test environment. Performing a single point handheld calibrator check, both before and after your test, ensures reliability of the test data. With proper maintenance, the microphone and preamplifier should provide stable and accurate results for years to come.

7.0 Calibration

PCB offers recalibration services for our precision microphones, as well as units produced by other A2LA manufacturers. Our internal metrology laboratory is certified to ISO 9001, accredited by A2LA to ANSI/IEC 17025 and ANSI/NCSL Z540-1, complies with ISO 10012-1 (and former MIL-STD-45662A), and uses equipment directly traceable to one or more of the following National Labs (NIST, PTB or DFM). Our investment in equipment, traceability and conformance to industry standards ensures accurate calibration against relevant specifications. We also carry a line of acoustic calibrators that can be used to calibrate microphone sensitivity on site as needed.

Hand calibration of sensitivity for most prepolarized microphones may be performed with a Larson Davis CAL250 or CAL200 (or equivalent). The CAL250 produces 114 dB SPL at 251.2 Hz. The CAL 200 produces either 94 dB or 114 dB (user selectable) at 1000 Hz. Note that both the CAL250 and CAL 200 are compliant with ANSI S1.40-2006, Specifications and Verification Procedures for Sound Calibrators, Class1 and IEC 60942-2003, Class 1, Sound Calibrators.

8.0 Warranty and Service

All equipment and repair services provided by PCB Piezotronics, Inc. are covered by a warranty against defective material and workmanship under a **Total Customer Satisfaction** policy. If, at any time, for any reason, you are not completely satisfied with any PCB product, PCB will repair, replace, or exchange it at no charge. You may also choose to have your purchase price refunded. See the supplemental sheet, contained with this manual, for information on our service, repair and return policies, procedures and instructions. When unexpected problems arise, call our 24-Hour SensorLine℠ (716-684-0001) to speak with an Application Engineer. Visit www.pcb.com for a complete statement of our warranty.

3425 Walden Avenue, Depew, NY 14043-2495
E-Mail: info@pcb.com
Website: www.pcb.com

24-hour SensorLine℠: 716-684-0001
U.S.A. Fax: 716-684-0987
Toll-free (in the U.S.A.): 800-828-8840

A PCB GROUP COMPANY ISO 9001 CERTIFIED A2LA ACCREDITED to ISO 17025

© 2014 PCB Group, Inc. In the interest of constant product improvement, specifications are subject to change without notice. PCB and ICP are registered trademarks of PCB Group, Inc. Sensor Line is a service mark of PCB Group, Inc. All other trademarks are properties of the respective owners.

Manual Number: 27042
Manual Revision: F
ECO 51020

Printed in the U.S.A.

Model Number	ICP MICROPHONE SYSTEM	Revision: F
HT378B02		ECN #: 47338

Performance	**ENGLISH**	**SI**	
Nominal Microphone Diameter	1/2"	1/2"	
Frequency Response Characteristic(at 0° incidence)	Free-Field	Free-Field	
Sensitivity	50 mV/Pa	50 mV/Pa	[4]
Sensitivity(± 1.5 dB)	-26 dB re 1 V/Pa	-26 dB re 1 V/Pa	[4]
Frequency Range(± 2 dB)	3.5 to 20,000 Hz	6 to 10,000 Hz	
Frequency Range(± 1 dB)	6 to 10,000 Hz	3.5 to 20,000 Hz	
Lower Limiting Frequency(-3 dB)	1.0 to 2.75 Hz	1.0 to 2.75 Hz	
Inherent Noise	16 dB(A) re 20 µPa	16 dB(A) re 20 µPa	[3]
Dynamic Range(3% Distortion Limit)	138.5 dB re 20 µPa	138.5 dB re 20 µPa	[3]
TEDS Compliant	Yes	Yes	[5]
Environmental			
Temperature Range(Operating)	-40 to +257 °F	-40 to +125 °C	[2]
Temperature Coefficient of Sensitivity(+14 to +158°F (-10 to +70°C))	0.005 dB/°F	0.009 dB/°C	[3][4]
Static Pressure Coefficient	-0.013 dB/kPa	-0.013 dB/kPa	[3][4]
Humidity Coefficient of Sensitivity(0 to 100%, non-condensing)	± 0.001 dB/%RH	± 0.001 dB/%RH	[4]
Influence of Axial Vibration(0.1g (1 m/s²))	63 dB re 20 µPa	63 dB re 20 µPa	[3]
Electrical			
Polarization Voltage	0 V	0 V	[1]
Excitation Voltage	20 to 32 VDC	20 to 32 VDC	
Constant Current Excitation	2 to 10 mA	2 to 10 mA	
Output Bias Voltage	10 to 14 VDC	10 to 14 VDC	
Maximum Output Voltage	± 7 Vpk	± 7 Vpk	
Output Impedance	<55 Ohm	<55 Ohm	
Physical			
Housing Material	Stainless Alloy	Stainless Alloy	
Venting	Rear	Rear	[6]
Electrical Connector	BNC Jack	BNC Jack	
Mounting Thread(Grid)	0.5 - 60 UNS	0.5 - 60 UNS	
Size (Diameter x Height)(with grid)	.52 in x 3.88 in	13.2 mm x 98.6 mm	
Size (Diameter x Height)(without grid)	.50 in x 3.84 in	12.7 mm x 97.5 mm	
Weight	1.74 oz	49.2 gm	[3]

CE [7]

All specifications are at room temperature unless otherwise specified.
In the interest of constant product improvement, we reserve the right to change specifications without notice.

OPTIONAL VERSIONS

Optional versions have identical specifications and accessories as listed for the standard model except where noted below. More than one option may be used.

NOTES:

[1] Prepolarized
[2] Limited to 120°C if ICP current > 4 mA
[3] Typical.
[4] re 250 Hz
[5] TEDS Capable Digital Communication, compliant with IEEE 1451.4
[6] Venting through Preamp.
[7] See PCB Declaration of Conformance PS065 for details.

SUPPLIED ACCESSORIES:

Model ACS-63 Calibration (with TEDS) of Precision Condenser Microphones and Preamplifiers together (mated pair). (1)

Entered: LK	Engineer: MT	Sales: MV	Approved: MT	Spec Number:
Date: 10/20/2017	Date: 10/20/2017	Date: 10/20/2017	Date: 10/20/2017	**57825**

PCB PIEZOTRONICS
3425 Walden Avenue, Depew, NY 14043
Phone: 716-684-0001
Fax: 716-684-0987
E-Mail: info@pcb.com

57833

PCB Piezotronics Inc. claims proprietary rights in the information disclosed hereon. Neither it nor any reproduction thereof will be disclosed to others without the written consent of PCB Piezotronics Inc.

REVISIONS		
REV	DESCRIPTION	DIN
NR	RELEASED TO DRAFTING	42362

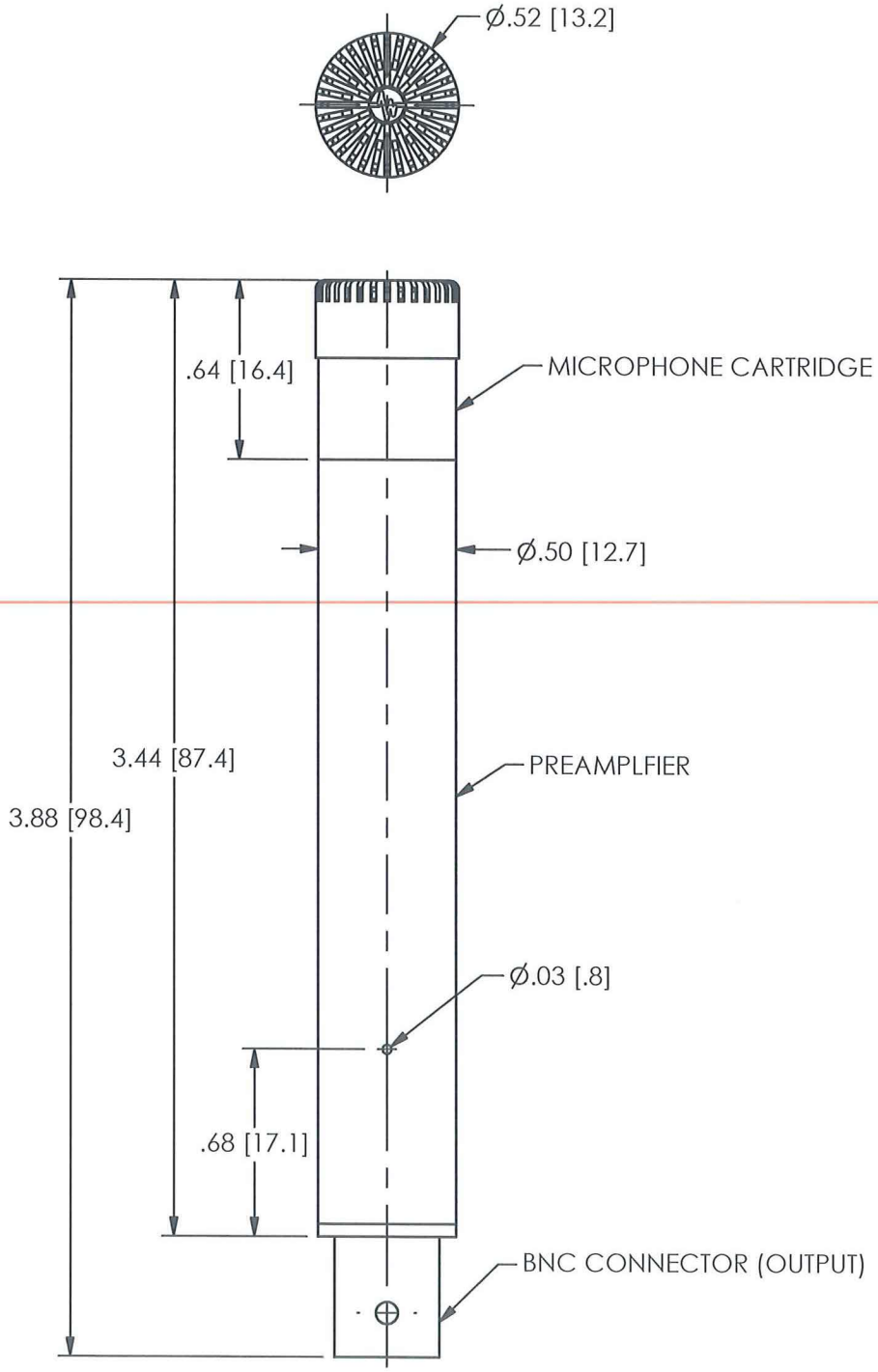

UNLESS OTHERWISE SPECIFIED TOLERANCES ARE:	
DIMENSIONS IN INCHES	DIMENSIONS IN MILLIMETERS [IN BRACKETS]
DECIMALS XX ±.03 XXX ±.010	DECIMALS X ± 0.8 XX ± 0.25
ANGLES ± 2 DEGREES	ANGLES ± 2 DEGREES
FILLETS AND RADII .003 - .005	FILLETS AND RADII 0.07 - 0.13

DRAWN		CHECKED		ENGINEER	
JDM	12/20/13			MT	12/20/13

TITLE

OUTLINE DRAWING
1/2" ICP MICROPHONE SYSTEM
HIGH TEMPERATURE

PCB PIEZOTRONICS
3425 WALDEN AVE. DEPEW, NY 14043
(716) 684-0001 E-MAIL: sales@pcb.com

CODE IDENT. NO.	DWG. NO.	
52681	57833	
SCALE: 1.5X	SHEET 1 OF 1	

jmorawski 09:05 12/23/2013

Repair and Maintenance

PCB guarantees Total Customer Satisfaction through its "Lifetime Warranty Plus" on all Platinum Stock Products sold by PCB and through its limited warranties on all other PCB Stock, Standard and Special products. Due to the sophisticated nature of our sensors and associated instrumentation, **field servicing and repair is not recommended and, if attempted, will void the factory warranty**.

Beyond routine calibration and battery replacements where applicable, our products require no user maintenance. Clean electrical connectors, housings, and mounting surfaces with solutions and techniques that will not harm the material of construction. Observe caution when using liquids near devices that are not hermetically sealed. Such devices should only be wiped with a dampened cloth—never saturated or submerged.

In the event that equipment becomes damaged or ceases to operate, our Application Engineers are here to support your troubleshooting efforts 24 hours a day, 7 days a week. Call or email with model and serial number as well as a brief description of the problem.

Calibration

Routine calibration of sensors and associated instrumentation is necessary to maintain measurement accuracy. We recommend calibrating on an annual basis, after exposure to any extreme environmental influence, or prior to any critical test.

PCB Piezotronics is an ISO-9001 certified company whose calibration services are accredited by A2LA to ISO/IEC 17025, with full traceability to SI through N.I.S.T. In addition to our standard calibration services, we also offer specialized tests, including: sensitivity at elevated or cryogenic temperatures, phase response, extended high or low frequency response, extended range, leak testing, hydrostatic pressure testing, and others. For more information, contact your local PCB Piezotronics distributor, sales representative, or factory customer service representative.

Returning Equipment

If factory repair is required, our representatives will provide you with a Return Material Authorization (RMA) number, which we use to reference any information you have already provided and expedite the repair process. This number should be clearly marked on the outside of all returned package(s) and on any packing list(s) accompanying the shipment.

Contact Information

PCB Piezotronics, Inc.
3425 Walden Ave.
Depew, NY14043 USA
Toll-free: (800) 828-8840
24-hour SensorLine: (716) 684-0001
General inquiries: info@pcb.com
Repair inquiries: rma@pcb.com

For a complete list of distributors, global offices and sales representatives, visit our website, www.pcb.com.

Safety Considerations

This product is intended for use by qualified personnel who recognize shock hazards and are familiar with the precautions required to avoid injury. While our equipment is designed with user safety in mind, the protection provided by the equipment may be impaired if equipment is used in a manner not specified by this manual.

Discontinue use and contact our 24-Hour Sensorline if:

- Assistance is needed to safely operate equipment
- Damage is visible or suspected
- Equipment fails or malfunctions

For complete equipment ratings, refer to the enclosed specification sheet for your product.

Definition of Terms and Symbols

The following symbols may be used in this manual:

DANGER
Indicates an immediate hazardous situation, which, if not avoided, may result in death or serious injury.

CAUTION
Refers to hazards that could damage the instrument.

NOTE
Indicates tips, recommendations and important information. The notes simplify processes and contain additional information on particular operating steps.

The following symbols may be found on the equipment described in this manual:

This symbol on the unit indicates that high voltage may be present. Use standard safety precautions to avoid personal contact with this voltage.

This symbol on the unit indicates that the user should refer to the operating instructions located in the manual.

This symbol indicates safety, earth ground.

PCB- PCB工业监测和测量设备 - 中国RoHS 公布表

PCB Industrial Monitoring and Measuring Equipment - China RoHS Disclosure Table

部件名称 Part Name	有毒和危险品 Toxic and Hazardous Substances or Elements									
Part	铅 (Pb)	水银 (Hg)	镉 (Cd)	六价 铬 (Cr(VI)	多溴化 苯 (PBB)	多溴化二苯 醚 (PBDE)	邻苯二甲酸 二(2-乙基) 己酯 (DEHP)	邻苯二甲丁 基苄酯 (BBP)	邻苯二甲酸 二酸正丁酯 (DBP)	邻苯二甲酸 二异丁酯 (DIBP)
电气外壳 (Electrical Enclosures)	X	O	O	O	O	O	O	O	O	O
紧固件和弹簧 (Fasteners)	X	O	O	O	O	O	O	O	O	O
电缆组件 (Cable Assembly)	X	O	O	O	O	O	O	O	O	O
印刷电路板组装 (PCBAs)	X	O	O	O	O	O	O	O	O	O
机械零件(Mechanical Parts)	O	O	O	O	O	O	O	O	O	O
塑料和橡胶零件 (Plastic & Rubber Parts)	O	O	O	O	O	O	O	O	O	O
金属零件 (Metal Parts)	X	O	O	O	O	O	O	O	O	O

本表格依据 SJ/T 11364 的规定编制

O =表示该有害物质在该部件所有均质材料中的含量均在 GB/T 26572 规定的限量要求以下 (indicates that the content of the toxic and hazardous substance in all the Homogeneous Materials of the part is below the concentration limit requirement as described in GB/T 26572).

X =表示该有害物质至少在该部件的某一均质材料中的含量超出 GB/T 26572 规定的限量要求 (indicates that the content of the toxic and hazardous substance in at least one Homogeneous Material of the part exceeds the concentration limit requirement as described in GB/T 26572).