Manual

HIQuad® X

System Manual

All of the HIMA products mentioned in this manual are trademark protected. This also applies for other manufacturers and their products which are mentioned unless stated otherwise.

HIQuad®, HIQuad®X, HIMax®, HIMatrix®, SILworX®, XMR®, HICore® and FlexSILon® are registered trademarks of HIMA Paul Hildebrandt GmbH.

All of the technical specifications and information in this manual were prepared with great care and effective control measures were employed for their compilation. For questions, please contact HIMA directly. HIMA appreciates any suggestion on which information should be included in the manual.

Equipment subject to change without notice. HIMA also reserves the right to modify the written material without prior notice.

All the current manuals can be obtained upon request by sending an e-mail to: documentation@hima.com.

© Copyright 2018, HIMA Paul Hildebrandt GmbH

All rights reserved.

Contact

HIMA Paul Hildebrandt GmbH

P.O. Box 1261

68777 Brühl

Phone: +49 6202 709-0

Fax: +49 6202 709-107

E-mail: info@hima.com

Document designation	Description
HI 803 210 D, Rev. 1.01 (1844)	German original document
HI 803 211 E, Rev. 1.01.00 (1847)	English translation of the German original document

Table of Contents

1 Introduction 7

1.1 Structure and Use of the Document 7

1.2 Target Audience 7

1.3 Writing Conventions 8

1.3.1 Safety Notices 8

1.3.2 Operating Tips 9

1.4 Safety Lifecycle Services 10

2 Safety 11

2.1 Intended Use 11

2.1.1 Application in Accordance with the De-Energize to Trip Principle 11

2.1.2 Application in Accordance with the Energize to Trip Principle 11

2.1.3 Use in Fire Alarm Systems 11

2.1.4 Explosion Protection 11

2.2 ESD Protective Measures 12

2.3 Residual Risk 12

2.4 Safety Precautions 12

2.5 Emergency Information 12

3 Concept for HIQuad X 13

3.1 Safety and Availability 13

3.2 Concept for HIQuad H51X 14

3.2.1 The H51X Mono System 15

3.2.2 The H51X Redundancy System 17

3.3 Concept for HIQuad H41X 20

3.3.1 The H41X Mono System 21

3.3.2 The H41X Redundancy System 23

3.4 Extension Rack 25

3.5 Ventilation Concept 26

3.5.1 Measures for Reducing the Temperature 26

3.5.2 Engineering Support 26

3.5.2.1 Installing the HIQuad X System in the Control Cabinet 26

3.5.2.2 Heat Dissipation 28

3.5.2.3 Installation Type 28

3.5.2.4 Natural Convection 28

3.5.2.5 Note on the Standard 28

4 Product Description 29

4.1 Backplane 29

4.2 19-Inch Frame 29

4.2.1 H51X Backplane 31

4.2.1.1 Supply of the H51X Base Rack 31

4.2.1.2 Buffered Voltage for LS1+ and LS2+ in F-PWR 02 Buffer Modules 32

4.2.1.3 5 V Power Supply for Extension Racks 32

4.2.1.4 Signaling Relay for F-PWR 02 Buffer Module, XG6 32

4.2.2 H41X Backplane 33

4.2.2.1 Supply of the H41X Base Rack 33

4.2.2.2 5 V Power Supply for Extension Racks 34
4.2.2.3 24 V Auxiliary Voltages for I/O Modules and I/O Processing Module 35
4.2.3 Extension Rack Backplane 36
4.2.4 Temperature Monitoring 37
4.3 Power Supply 38
4.3.1 Mono H51X Base Rack (24 VDC) 41
4.3.2 Redundant H51X Base Rack (24 VDC) 42
4.3.3 Redundant H51X Base Rack and I/O Level (24 VDC) 43
4.3.4 H51X Base Rack (24 VDC) I/O Level via F-PWR 02 Buffer Modules (Optional) 44
4.3.5 Mono H41X Base Rack (24 VDC) 45
4.3.6 Redundant H41X Base Rack (24 VDC) 46
4.3.7 24 V Distribution for HIQuad X 47
4.3.7.1 5 V Distribution for HIQuad X 48
4.3.7.2 5 VDC Distribution for H51X 48
4.3.7.3 5 VDC Distribution for H41X 50
4.3.8 5 VDC Additional Power Supply (H51X) 51
4.4 System Bus 51
4.5 I/O Bus 52
4.6 I/O Watchdog (WD) 52
4.7 Modules 53
4.8 F-CPU 01 Processor Module 53
4.8.1 Operating System 53
4.8.1.1 General Cycle Sequence 53
4.8.1.2 Operating System States 53
4.8.2 Behavior in the Event of Faults 56
4.9 F-IOP 01 I/O Processing Module 57
4.10 F-COM 01 Communication Module 57
4.11 I/O Modules 58
4.11.1 Scope of Application of the I/O Modules 58
4.11.2 Mounting Position 58
4.12 Noise Blanking 59
4.12.1 Effects of Noise Blanking 59
4.12.2 Configuring Noise Blanking 59
4.12.3 Noise Blanking Sequence 60
4.12.4 Effective Direction of Noise Blanking 62
4.12.4.1 Effective Direction from the Input Module to the Processor Module (3) 62
4.12.4.2 Effective Direction from the Processor Module to the Output Module (4) 62
4.12.4.3 Effective Direction from the Processor Module to the Output Module (7) 62
4.13 Communication 63
4.13.1 Licensing 63
4.14 Connecting the PADT to the System 63
4.15 Licensing 64
5 Redundancy 65
5.1 Processor Module Redundancy 65
5.1.1 Reducing Redundancy 65
5.1.2 Increasing Redundancy 65

5.2 Redundancy of I/O Modules 65
5.2.1 Module Redundancy 66
5.2.2 Channel Redundancy 66
5.3 System Bus Redundancy 66
5.4 Communication Redundancy 66
5.4.1 safe**ethernet** 66
5.4.2 Standard Protocols 66
6 Programming 67
6.1 Using Variables in a Project 67
6.1.1 Variable Types 68
6.1.2 Initial Value 68
6.1.3 System Variables and System Parameters 69
6.1.3.1 Resource System Parameters 70
6.1.3.2 Use of the Parameters *Target Cycle Time* and *Target Cycle Time Mode* 73
6.1.3.3 Maximum Communication Time Slice 74
6.1.3.4 Calculating the *Maximum Duration of Configuration Connections [ms]* 75
6.1.3.5 The *Minimum Configuration Version* Parameter 76
6.1.3.6 Rack System Variables 77
6.1.3.7 Locking and Unlocking the Resource 81
6.2 Forcing 82
6.2.1 Time Limits 83
6.2.2 Restricting the Use of Forcing 83
6.2.3 Force Editor 83
6.2.4 Automatic Forcing Reset 84
6.2.5 Forcing and Scalar Events 84
6.3 Cycle Sequence 84
6.4 User Management 85
6.4.1 PADT User Management 85
6.4.2 PES User Management 86
6.4.3 Default User 86
6.4.4 Setting up PES User Accounts 88
7 Diagnostics 89
7.1 Light Emitting Diodes 89
7.2 Diagnostic History 89
7.2.1 Diagnostic Messages 90
7.3 Online Diagnosis 91
8 Product Data, Dimensioning 93
8.1 Environmental Conditions 93
8.2 Dimensioning 93
9 Lifecycle 94
9.1 Installation 94
9.1.1 Mechanical Structure 94
9.1.2 Connecting the Field Level 94
9.1.3 Grounding 94
9.1.3.1 CE-Compliant Structure of the Control Cabinet 95
9.1.3.2 Surges on Digital Inputs 95

9.1.4 Grounding Connectors 96
9.1.5 Grounding and Shielding Concept of HIMA Control Cabinets 98
9.1.6 Grounding Several Control Cabinets 99
9.1.7 Ungrounded Operation 99
9.1.8 Grounded Operation 99
9.1.9 Shielding within the Input and Output Areas 100
9.1.10 Lightning Protection for Data Lines in HIMA Communication Systems 100
9.1.11 Cable Colors 100
9.1.12 Connecting the Supply Voltage 100
9.2 Start-Up 101
9.2.1 Starting up the Control Cabinet 101
9.2.1.1 Test of All Inputs and Outputs 101
9.2.1.2 Voltage Connection 101
9.2.2 Starting up the PES with Processor Modules (F-CPU 01) 101
9.2.2.1 Faults 102
9.3 Maintenance and Repairs 103
9.3.1 Connecting the Power Supply after a Service Interruption 103
9.3.2 Connecting the Redundant Power Supply 103
9.3.3 Loading Operating Systems 103
10 HIQuad X Documentation 104
Appendix 105
Glossary 105
Index of Figures 106
Index of Tables 107
Index 108

1 Introduction

This manual describes the configuration and mode of operation of the safety-related programmable electronic system HIQuad X. The system is designed for safety-related applications up to SIL 3 (IEC 61508), PL e (EN ISO 13849) and for high availability.

HIQuad X can be used for various control tasks within the process and factory automation industry, in particular in process facilities.

1.1 Structure and Use of the Document

This system manual is composed of the following main chapters:

Introduction	Introduction to this manual.
Safety	Information on how to safely use the HIQuad X system.
Concept for HIQuad X	Concept of the innovative high-performance HIQuad X system.
Product description	Structure of the HIQuad X system.
Redundancy	Options for increasing availability.
Programming	Important instructions on how to create a user program.
Diagnostics	Summary of the diagnostic options.
Product Data, Dimensioning	Specifications related to the entire system. Specifications for the individual components are included in the corresponding manual.
Lifecycle	Phases of a HIQuad X system lifecycle: ▪ Installation ▪ Start-up ▪ Maintenance and repairs
HIQuad X Documentation	Overview of the documentation:
Appendix	▪ Glossary ▪ Index of tables and index of figures ▪ Index

1.2 Target Audience

This document is aimed at the planners, design engineers and programmers of automation systems as well as the persons authorized to start up, operate and maintain the devices and systems concerned. Specialized knowledge of safety-related automation systems is required.

All specialist staff (planning, installation, start-up) must be instructed concerning the risks and the associated possible consequences which can arise as a result of modifications to a safety-related automation system.

Planners and configuration engineers must have additional knowledge about the selection and use of electrical and electronic safety systems in automated plants, e.g., to prevent improper connections or faulty programming.

The operator is responsible for qualifying the operating and maintenance personnel and providing them with appropriate safety instructions.

Only staff members with knowledge of industrial process measurement and control, electrical engineering, electronics and the implementation of PES and ESD protective measures may modify or extend the system wiring.

1.3 Writing Conventions

To ensure improved readability and comprehensibility, the following writing conventions are used in this document:

Bold	To highlight important parts. Names of buttons, menu functions and tabs that can be clicked and used in the programming tool.
Italics	Parameters and system variables, references.
`Courier`	Literal user inputs.
RUN	Operating states are designated by capitals.
Chapter 1.2.3	Cross-references are hyperlinks even if they are not specially marked. In the electronic document (PDF): When the cursor hovers over a hyperlink, it changes its shape. Click the hyperlink to jump to the corresponding position.

Safety notices and operating tips are specially marked.

1.3.1 Safety Notices

Safety notices must be strictly observed to ensure the lowest possible risk.

The safety notices are represented as described below.

- Signal word: warning, caution, notice.
- Type and source of risk.
- Consequences arising from non-observance.
- Risk prevention.

The signal words have the following meanings:

- Warning indicates hazardous situations which, if not avoided, could result in death or serious injury.
- Caution indicates hazardous situation which, if not avoided, could result in minor or moderate injury.
- Notice indicates a hazardous situation which, if not avoided, could result in property damage.

⚠ SIGNAL WORD

Type and source of risk!
Consequences arising from non-observance.
Risk prevention.

NOTICE

Type and source of damage!
Damage prevention.

1.3.2 Operating Tips

Additional information is structured as presented in the following example:

i	The text giving additional information is located here.

Useful tips and tricks appear as follows:

TIP	The tip text is located here.

1.4 Safety Lifecycle Services

HIMA provides support throughout all the phases of the plant's safety lifecycle, from planning and engineering through commissioning to maintenance of safety and security.

HIMA's technical support experts are available for providing information and answering questions about our products, functional safety and automation security.

To achieve the qualification required by the safety standards, HIMA offers product or customer-specific seminars at HIMA's training center or on site at the customer's premises. The current seminar program for functional safety, automation security and HIMA products can be found on HIMA's website.

Safety Lifecycle Services:	
Onsite+ / On-Site Engineering	In close cooperation with the customer, HIMA performs changes or extensions on site.
Startup+ / Preventive Maintenance	HIMA is responsible for planning and executing preventive maintenance measures. Maintenance actions are carried out in accordance with the manufacturer's specifications and are documented for the customer.
Lifecycle+ / Lifecycle Management	As part of its lifecycle management processes, HIMA analyzes the current status of all installed systems and develops specific recommendations for maintenance, upgrading and migration.
Hotline+ / 24 h Hotline	HIMA's safety engineers are available by telephone around the clock to help solve problems.
Standby+ / 24 h Call-Out Service	Faults that cannot be resolved over the phone are processed by HIMA's specialists within the time frame specified in the contract.
Logistics+/ 24 h Spare Parts Service	HIMA maintains an inventory of necessary spare parts and guarantees quick, long-term availability.

Contact details:	
Safety Lifecycle Services	https://www.hima.com/en/about-hima/contacts-worldwide/
Technical Support	https://www.hima.com/en/products-services/support/
Seminar Program	https://www.hima.com/en/products-services/seminars////

2 Safety

All safety information, notes and instructions specified in this manual must be strictly observed. The product may only be used if all guidelines and safety instructions are adhered to.

For further information on safety, observe the instructions provided in the HIQuad X safety manual (HI 803 209 E).

2.1 Intended Use

This chapter describes the intended use of the safety-related automation system HIQuad X.

The automation system is designed for controlling and regulating industrial process plants. SILworX, HIMA's programming tool, is used for programming, configuring, monitoring, operating and documenting the HIQuad X system.

2.1.1 Application in Accordance with the De-Energize to Trip Principle

The HIQuad X system is designed in accordance with the de-energize to trip principle.

If a fault occurs, a system operating in accordance with the de-energize to trip principle enters the de-energized state to perform its safety function.

2.1.2 Application in Accordance with the Energize to Trip Principle

The HIQuad X system can also be used in applications that operate in accordance with the energize to trip principle.

A system operating in accordance with the energize to trip principle switches on, for instance, an actuator to perform its safety function.

When designing the automation system, the requirements specified in the application standards must be taken into account. For instance, line monitoring (SC/OC) for inputs and outputs or message reporting a triggered safety function may be required.

If the components are defective, the de-energized state is entered irrespective of whether the system is operating in accordance with the energized to trip or with the de-energized to trip principle.

2.1.3 Use in Fire Alarm Systems

The HIQuad X systems with analog inputs are tested and certified for use in fire alarm systems in accordance with DIN EN 54-2 and NFPA 72.

The conditions of use provided in this manual must be observed, see also the HIQuad X safety manual (HI 803 209 E).

2.1.4 Explosion Protection

The HIQuad X automation system is suitable for mounting in zone 2.

The conditions of use provided in the HIQuad X safety manual (HI 803 209 E) must be observed.

2.2 ESD Protective Measures

Only personnel with knowledge of ESD protective measures may work on the HIQuad X system.

NOTICE

Damage to the HIQuad X system due to electrostatic discharge!

- **When performing the work, make sure that the workspace is free of static, and wear a grounding strap.**
- **If not used, ensure that the modules are protected from electrostatic discharge, e.g., by storing them in their packaging.**

2.3 Residual Risk

No imminent risk results from a HIMA system itself.

Residual risk may result from:

- Faults related to engineering.
- Faults in the user program.
- Faults related to the wiring.

2.4 Safety Precautions

Observe all local safety requirements and use the protective equipment required on site.

2.5 Emergency Information

A HIMA system is a part of the safety equipment of a plant. If the controller fails, the system enters the safe state.

In case of emergency, no action that may prevent the HIMA system from operating safely is permitted.

3 Concept for HIQuad X

HIQuad X is an innovative, high-performance automation system that is based on the existing HIQuad system. SILworX, HIMA's tried and tested programming tool, is used for programming, configuring, monitoring, operating and documenting HIQuad X. All HIMA programmable systems are thus future-proof and operated with just one programming tool. Additionally, HIQuad X supports already existing HIQuad I/O modules.

H51X and H41X, the HIQuad X system families, can be equipped with identical modules and have the following differences:

	HIQuad H51X	HIQuad H41X
Structure	Modular	Modular
Base rack	1 (without I/O modules)	1 (with a maximum of 12 I/O modules)
Extension rack	Max. 16	Max. 1
Processor module (F-CPU 01)	1 or 2	1 or 2
I/O processing module (F-IOP 01)	1 in each extension rack	1 in the base rack 1 in the extension rack
Communication module (F-COM 01)	A maximum of 10 in the base rack	A maximum of 2 in the base rack
I/O modules in each extension rack	16	16
Total number of I/O modules	Max. 256	Max. 28

Table 1: Differences of HIQuad H51X Compared to H41X

The H51X and H41X system families can be equipped with digital and analog I/O modules. For details, refer to Chapter 4.9.

The I/O processing module (F-IOP 01) uses the I/O bus to interconnect the I/O modules within one rack. The F-IOP 01 module safely communicates with the processor modules via one or two system buses, see Figure 2 and Figure 4.

3.1 Safety and Availability

The HIQuad X systems are designed for safety-related applications operating in accordance with the energize to trip and de-energize to trip principles up to SIL 3 in accordance with IEC 61508. Additionally, the HIQuad X system complies with the standards specified in the certificates.

Refer to the HIQuad X safety manual (HI 803 209 E) and certificates for the standards used to test the HIQuad X system.

For safety-related application up to SIL 3, the base racks must be equipped with the safety-related processor modules (F-CPU 01). The safety-related processor module (F-CPU 01) features a 1oo2 processor system. The 1oo2 processor system includes two microprocessors that continuously align their data.

Safety-related HIQuad I/O modules can be used to connect to the field level, see Chapter 4.9. I/O modules and processor modules exchange data via safety-related I/O processing modules (F-IOP 01) with integrated 1oo2 processor system.

Additional non-safety-related I/O modules can be used for non-safety-related applications.

Depending on the required safety and availability, the H51X and H41X system families can be structured as mono or redundancy systems, see the following chapters.

3.2 Concept for HIQuad H51X

The H51X system family has a modular structure which includes an H51X base rack and up to 16 extension racks. The H51X base rack (F-BASE RACK 01) can be equipped as shown in Figure 1.

The communication modules are connected to the processor modules via two system buses (A and B) in a point-to-point connection. The processor module in slot 8 controls and monitors system bus A whereas the processor module in slot 10 controls and monitors system bus B. During redundant operation, the two processor modules align their data.

The RJ-45 interfaces on the rear side of the base rack are used to connect the extension racks to the processor modules. An I/O processing module (F-IOP 01) must be used in the extension rack to connect the system buses to the I/O bus, see Figure 2 and Figure 4.

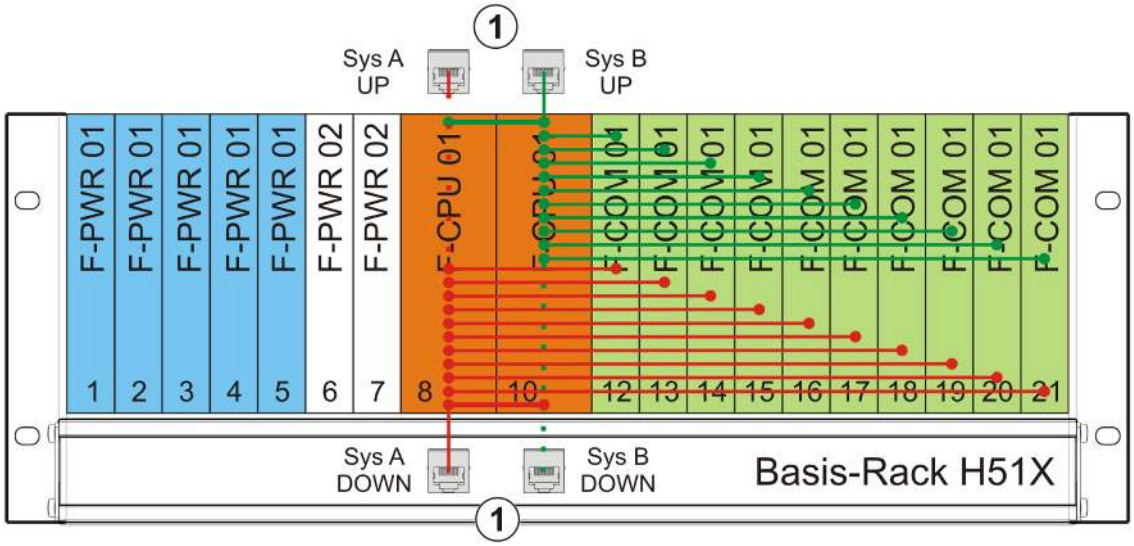

1 System bus interfaces on the rear side of the base rack

Figure 1: H51X Base Rack Completely Assembled

3.2.1 The H51X Mono System

Thanks to the use of safety-related modules (I/O modules, the I/O processing module and a processor module), the HIQuad H51X system can ensure safety-related signal processing in accordance with SIL 3 already when operating in a mono structure, see Figure 2.

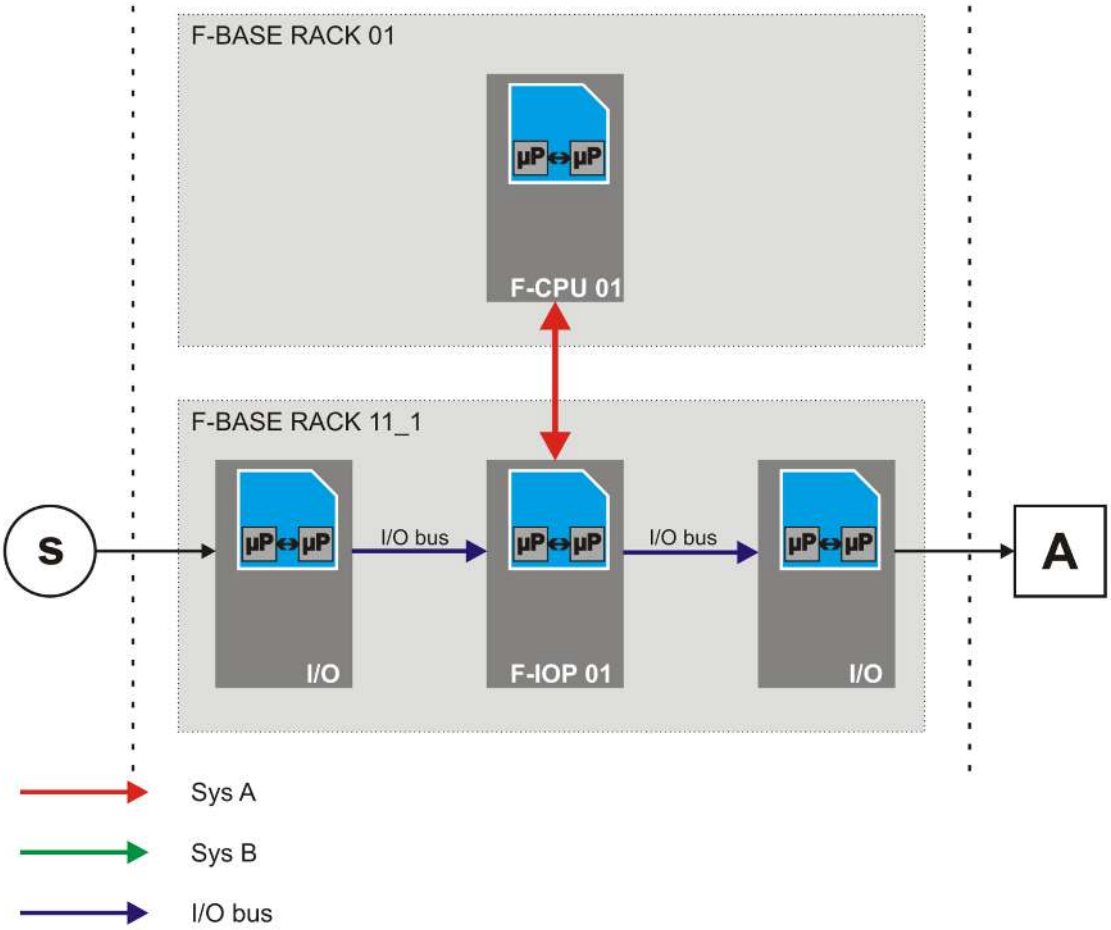

Figure 2: Example of Safe H51X Mono Operation (1oo2)

The input modules of the HIQuad H51X system safely record the values measured by sensors. Data is exchanged with the processor module via the I/O processing module. The measured values are cyclically queried by the processor module and processed by the user program. The user program's results are sent to the I/O processing module, which writes them to the output modules. The output modules thus control the field level, e.g., the actuators.

During mono operation, the signal is forwarded by the processor module in slot 8 via system bus A.

Figure 3 shows the example of an H51X mono system with system bus A. Up to 16 extension racks can be connected to the system bus in any UP loop, DOWN loop, or UP and DOWN loop. The extension racks are interconnected with system bus A via the I/O processing module, see the F-IOP 01 manual (HI 803 219 E).

If the system bus connection is interrupted in a mono system, all I/O modules located after the interruption point are no longer available. After the interruption point, all output modules enter the safety-related, de-energized state. As for the input modules, the failsafe initial values are processed in the respective processor module.

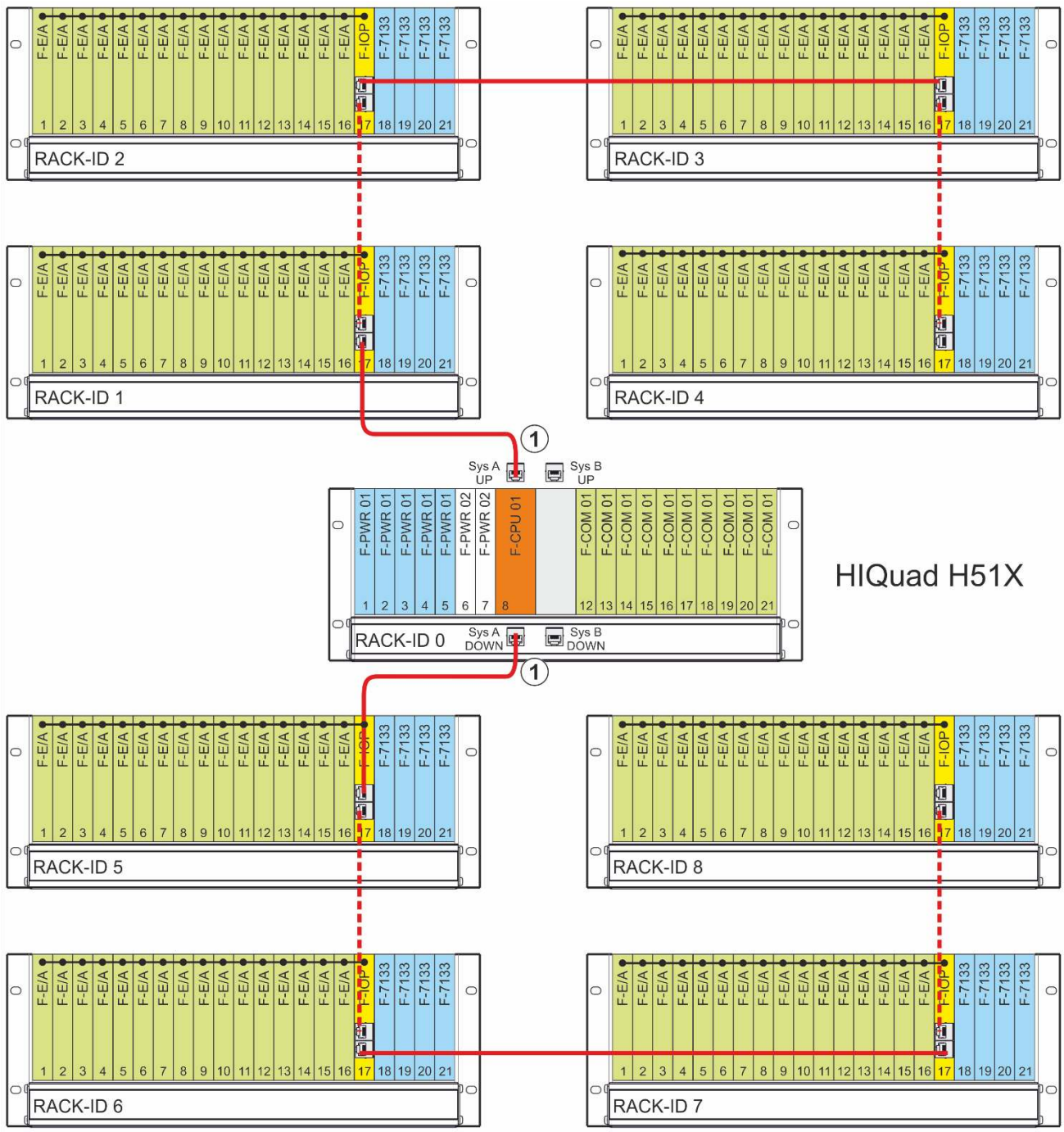

1 System bus interfaces on the rear side of the base rack

Figure 3: Example of H51X Mono System

The rack IDs do not necessarily have to be arranged as described above, but they must be unique.

To ensure a clearer overview, HIMA recommends the following:

- Arrange the rack IDs in accordance with Figure 3.
- Use red patch cables for system bus A if only system bus A is used.

3.2.2 The H51X Redundancy System

During redundant operation with two processor modules, both system buses are used to process the signals. This variant with redundant processor modules and system buses increases the system's availability, see Figure 4. If a processor module fails, it automatically enters the safe state and the redundant processor module maintains safe operation. The faulty processor module must be replaced to ensure continued availability. The processor module can be replaced while the system is operating.

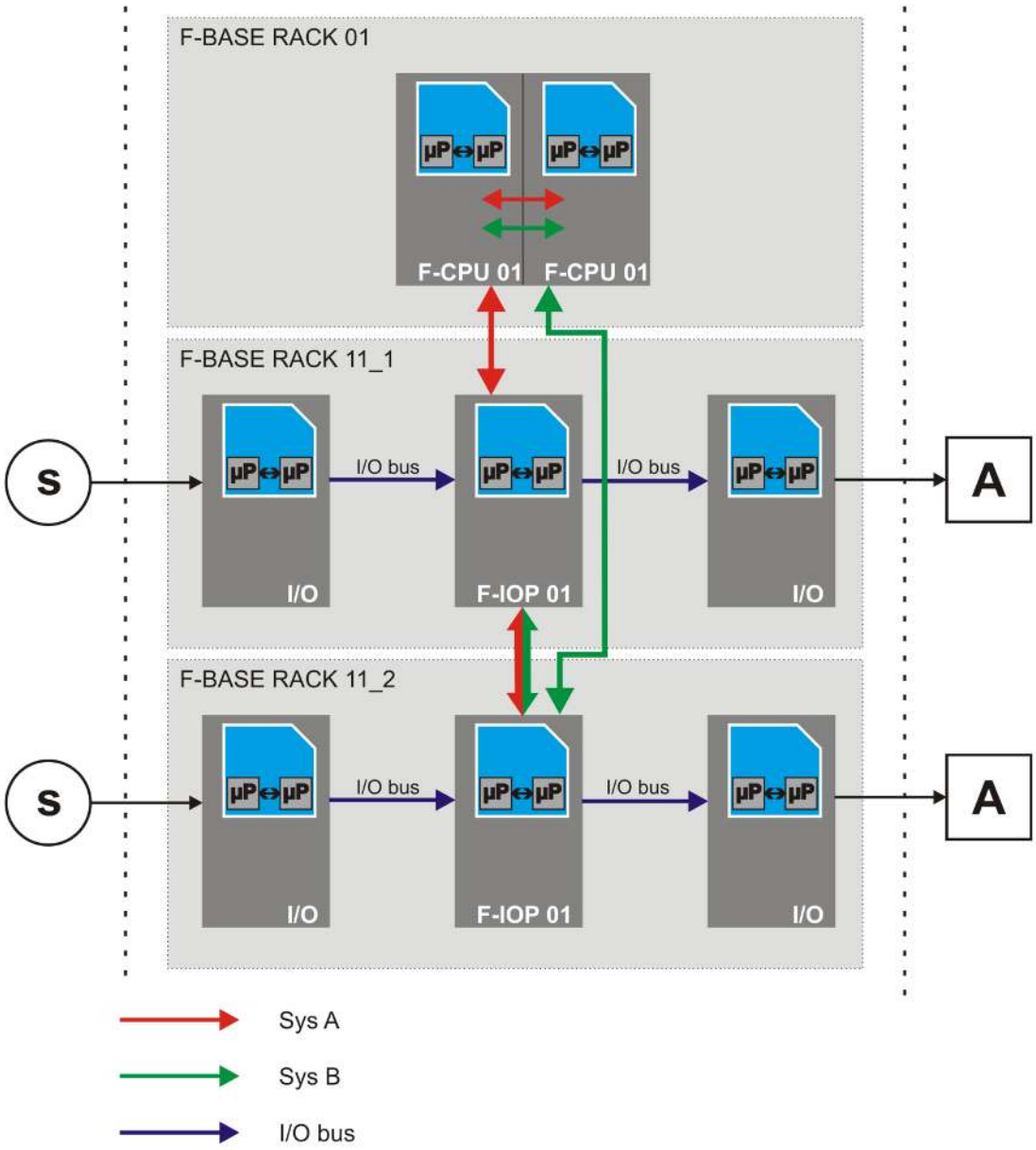

Figure 4: Example of Safe H51X Redundant Operation (1oo2)

In contrast to mono operation, the entire design of a redundant system is intended to ensure availability. Redundant input modules safely record the values measured by redundant sensors. They exchange data with the processor modules via the safety-related I/O processing modules. The measured values are cyclically queried and compared by the redundant processor modules, and then processed by the user program. The user program's results are sent to the I/O processing module, which writes them to the redundant output modules. The output modules thus control the field level, e.g., the actuators. The example in Figure 4 shows a redundant structure of field level and extension racks.

During redundant operation, the signal is processed via both system buses A and B. The system buses A and B between the I/O processing modules are implemented in a patch cable.

Figure 5 shows the example of an H51X redundancy system with system buses A and B. Up to 16 extension racks can be connected to the system buses in a UP loop, DOWN loop, or UP and DOWN loop. The extension racks are interconnected with system buses A and B via the I/O processing module, see F-IOP 01 manual (HI 803 219 E).

The advantage of a redundancy system is that, if one system bus is disconnected, the system can continue to operate via the redundant system bus. If an I/O processing module fails, all output modules in the affected rack enter the safety-related, de-energized state. The failsafe default values are transmitted for the input modules.

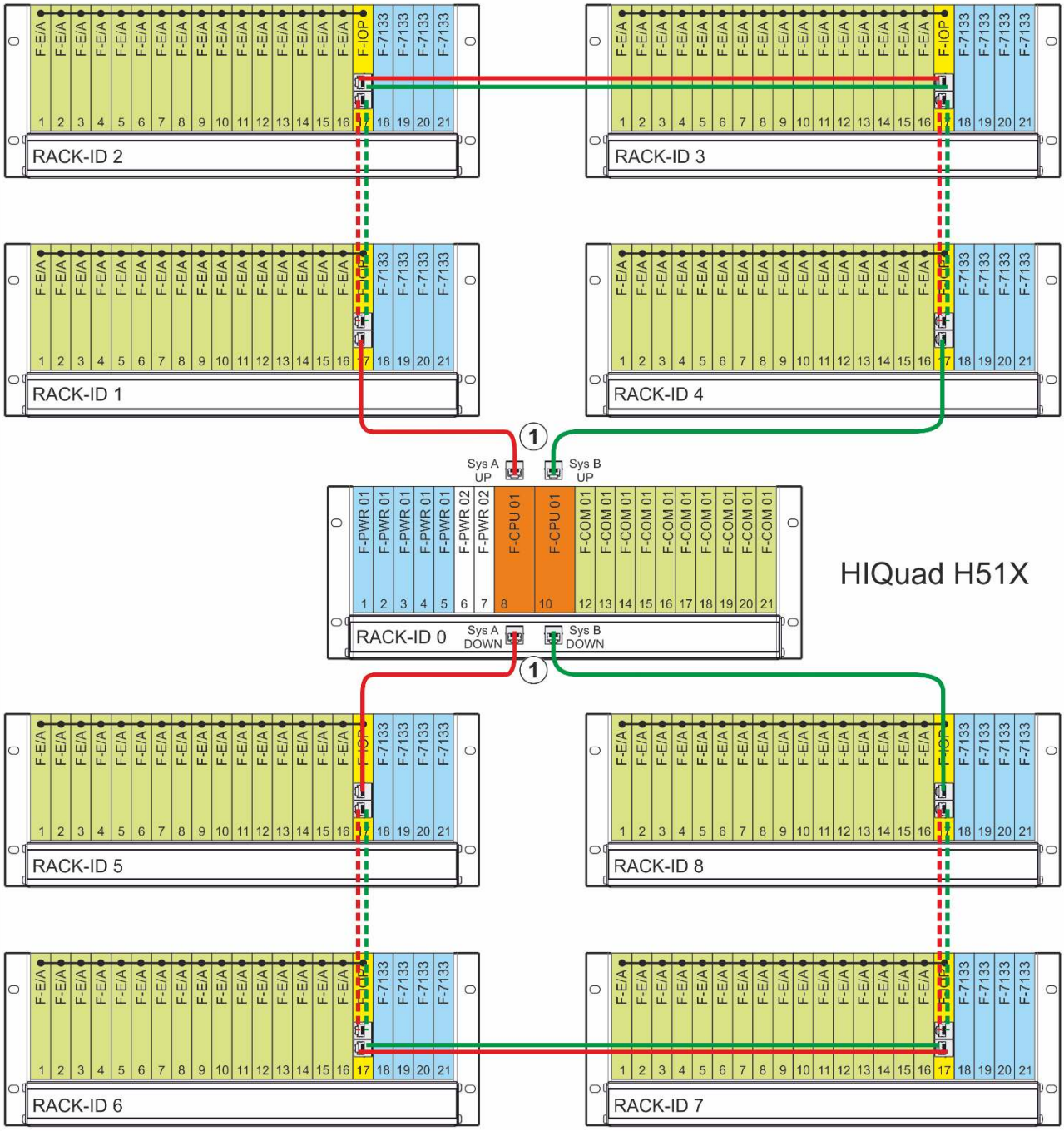

1 System bus interfaces on the rear side of the base rack

Figure 5: Example of H51X Redundancy System

The rack IDs do not necessarily have to be arranged as described above, but they must be unique.

To ensure a clearer overview, HIMA recommends the following:

- Arrange the rack IDs in accordance with Figure 5.
- Between the base rack and the first F-IOP module, use red patch cables for system bus A.
- Between the base rack and the first F-IOP module, use green patch cables for system bus B.

3.3 Concept for HIQuad H41X

The H41X system family has a modular structure which includes an H41X base rack and can be additionally equipped with an extension rack. The additional extension rack can be used to create a redundant I/O structure. The H41X base rack (F-BASE RACK 02) can be equipped as shown in Figure 6.

The communication modules are connected to the processor modules via two system buses (A and B) in a point-to-point connection. The processor module in slot 16 controls and monitors system bus A whereas the processor module in slot 18 controls and monitors system bus B. During redundant operation, the two processor modules align their data.

The RJ-45 system bus interfaces on the rear side of the base rack are used to connect the I/O modules in the H41X base rack to the processor modules. An I/O processing module (F-IOP 01) must be used in the H41X base rack to connect the I/O bus to the system buses. An I/O level redundant to that in the base rack can be set up by integrating an additional extension rack in the system bus connection of the H41X base rack.

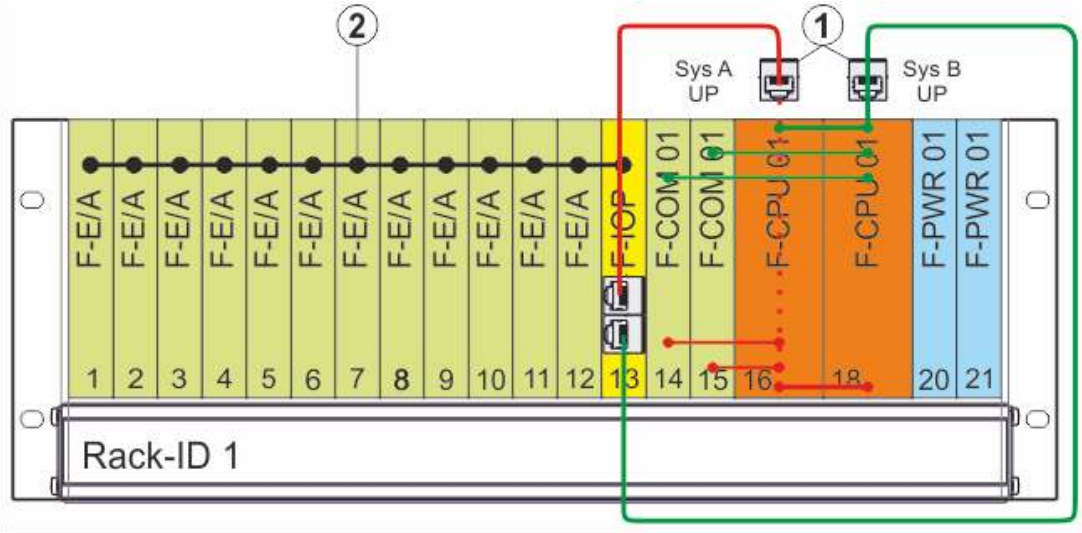

1 System bus connection on the rear side of the base rack

2 I/O bus

Figure 6: H41X Base Rack Completely Assembled

The rack IDs for the HIQuad H41X system are fixed.

To ensure a clearer overview, HIMA recommends the following:

- Between the base rack and the first F-IOP module, use red patch cables for system bus A.
- Between the base rack and the first F-IOP module, use green patch cables for system bus B.

3.3.1 The H41X Mono System

Thanks to the use of safety-related modules (I/O modules, the I/O processing module and a processor module), the HIQuad H41X system can ensure safety-related signal processing in accordance with SIL 3 already when operating in a mono structure, see Figure 7.

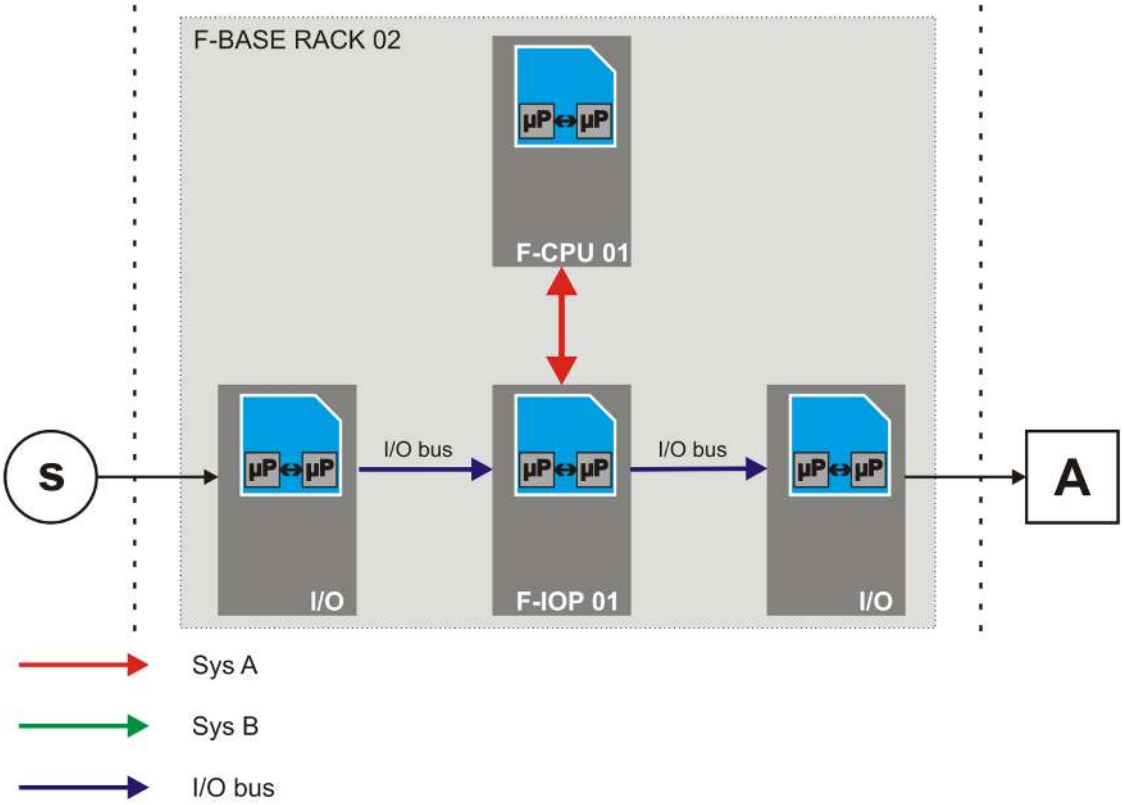

Figure 7: Example of Safe H41X Mono Operation (1oo2)

The input modules of the HIQuad H41X system safely record the values measured by sensors. Data is exchanged with the processor module via the I/O processing module. The measured values are cyclically queried by the processor module and processed by the user program. The user program's results are sent to the I/O processing module, which writes them to the output modules. The output modules thus control the field level, e.g., the actuators.

During mono operation, the signal is forwarded by the processor module in slot 16 via system bus A.

Figure 8 shows the example of an H41X mono system with system bus A. An additional extension rack can be connected to the system bus A. The extension rack is connected to the H41X base rack via the I/O processing module and the system bus A, see F-IOP 01 manual (HI 803 219 E).

If the system bus connection is interrupted in a mono system, all I/O modules located after the interruption point are no longer available. After the interruption point, all output modules enter the safety-related, de-energized state. As for the input modules, the failsafe initial values are processed in the respective processor module.

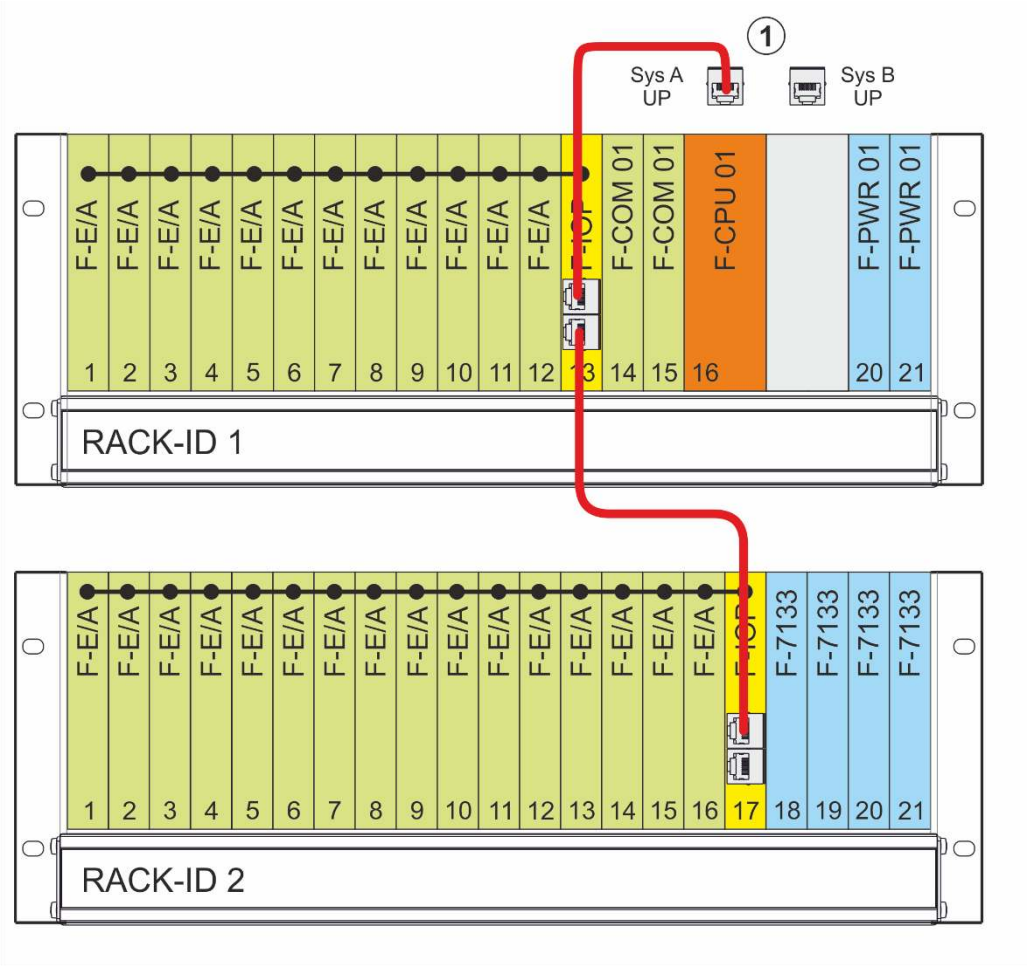

1 System bus interfaces on the rear side of the base rack

Figure 8: Example of H41X Mono System

The rack IDs for the HIQuad H41X system are fixed.

To ensure a clearer overview, HIMA recommends the following:

- Use red patch cables for system bus A if only system bus A is used.

3.3.2 The H41X Redundancy System

During redundant operation with two processor modules, both system buses are used to process the signals. This variant with redundant processor modules and system buses increases the system's availability, see Figure 9. If a processor module fails, it automatically enters the safe state and the redundant processor module maintains safe operation. The faulty processor module must be replaced to ensure continued availability. The processor module can be replaced while the system is operating.

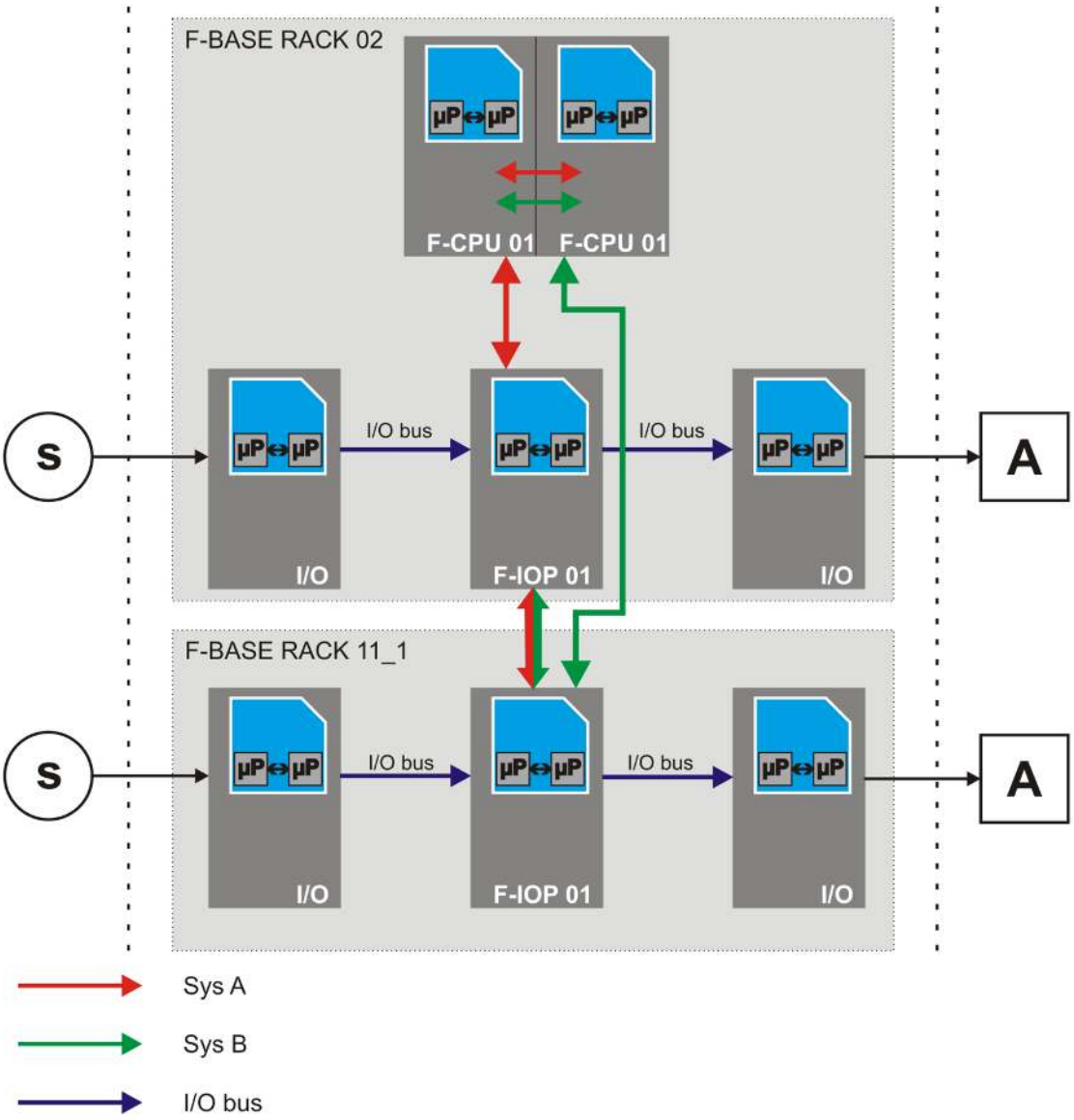

Figure 9: Example of Safe H41X Redundant Operation (1oo2)

In contrast to mono operation, the entire design of a redundant system is intended to ensure availability. Redundant input modules safely record the values measured by redundant sensors. They exchange data with the processor modules via the safety-related I/O processing modules. The measured values are cyclically queried and compared by the redundant processor modules, and then processed by the user program. The user program's results are sent to the I/O processing module, which writes them to the redundant output modules. The output modules thus control the field level, e.g., the actuators. The example in Figure 9 shows a redundant structure of field level and extension rack.

During redundant operation, the signal is processed via both system buses A and B. The system buses A and B between the I/O processing modules are implemented in a patch cable.

Figure 10 shows the example of an H41X redundancy system with system buses A and B. An additional extension rack can be connected to the system buses. The extension rack is connected to the H41X base rack via the I/O processing module and the system buses A and B, see F-IOP 01 manual (HI 803 219 E).

The advantage of a redundancy system is that, if one system bus is disconnected, the system can continue to operate via the redundant system bus. If one I/O processing module fails, the I/O modules in the affected rack enter the safe state while the other rack is not impaired by this failure.

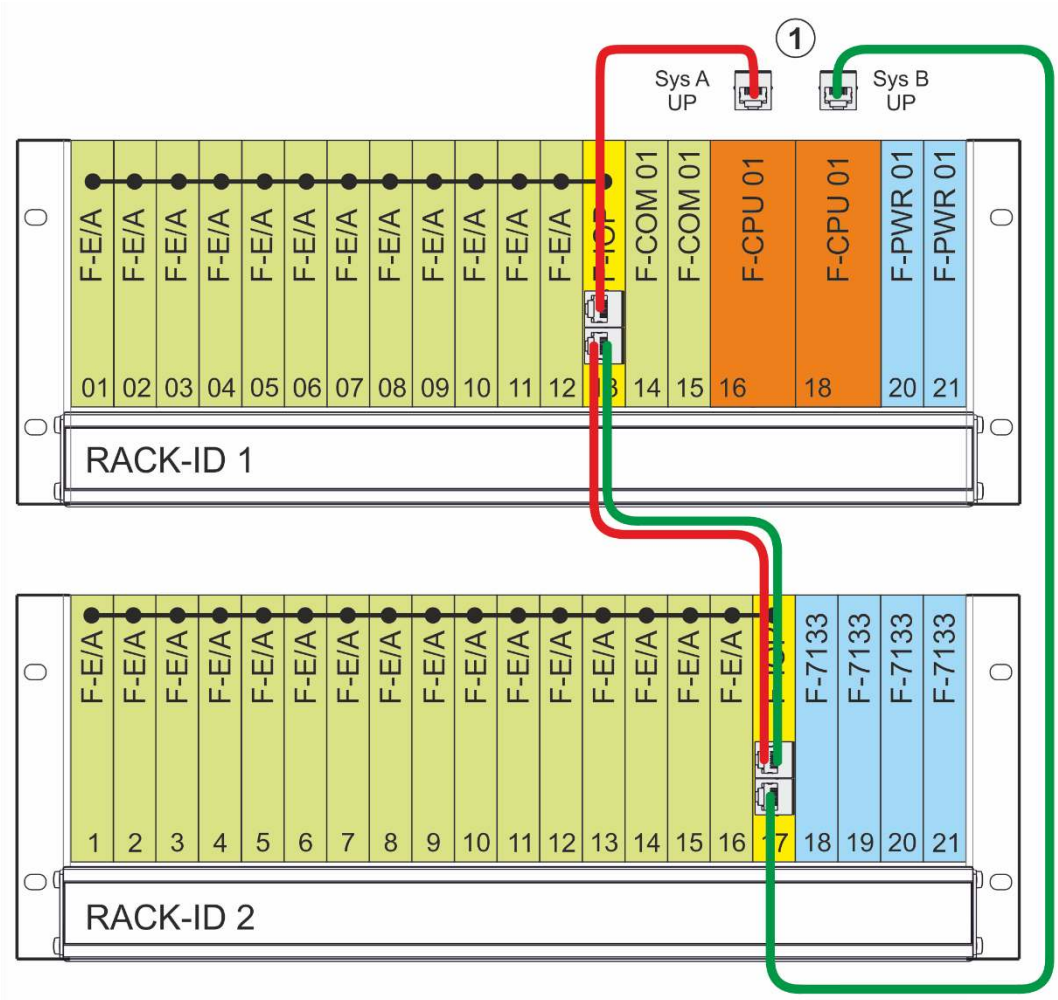

1 System bus interfaces on the rear side of the base rack

Figure 10: Example of H41X Redundancy System

The rack IDs for the HIQuad H41X system are fixed.

To ensure a clearer overview, HIMA recommends the following:

- Between Sys A UP and the F-IOP module, use red patch cables for system bus A.
- Between Sys B UP and the F-IOP module, use green patch cables for system bus B.

3.4 Extension Rack

The extension racks (F-BASE RACK 11) allow the HIQuad X system to be equipped with up to 265 I/O modules. The extension racks can be equipped with a maximum of 16 I/O modules to be inserted in slots 1...16. The I/O processing module is used to connect the system buses to the I/O bus.

The power distribution modules (F 7133) are used to fuse and distribute L+ and L- for the I/O modules. The power distribution modules are interference-free. They are provided with fuse monitoring and signal a failed fuse via contact and LED.

Figure 11 shows a fully equipped extension rack.

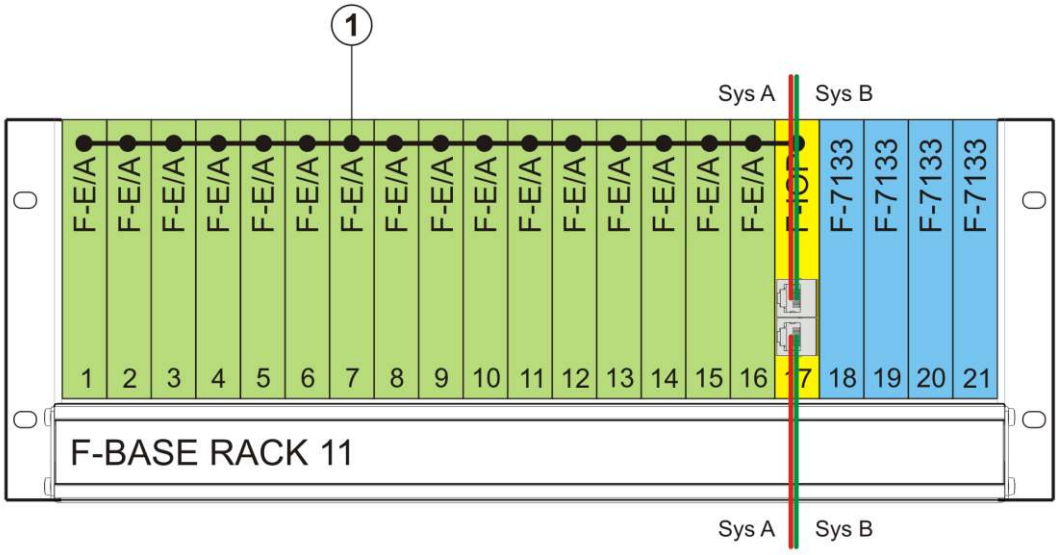

1 I/O bus

Figure 11: Extension Rack

3.5 Ventilation Concept

The high integration level of electronic components causes heat loss, which also depends on the external load of the HIQuad X system. For this reason, ensure proper ventilation within the control cabinet. Low ambient temperature increases the product life and the reliability of the electronic components within the system.

3.5.1 Measures for Reducing the Temperature

Low ambient temperature increases the product life and the reliability of the electronic components within the system. To reduce the temperature within the control cabinets, HIMA's standard control cabinets are equipped with the following components:

- SK 3162 S air intake filters ensuring air supply within the control cabinet through the door. The air intake filter should be used to prevent contaminants from entering the control cabinets.
- Air exhaust through the cut-outs on top of the control cabinet.
- HIMA K 9202B cabinet fan for mounting on the top internal section of the control cabinet.
- M 7200/M 7202 ventilation tray for the air duct between the individual racks.
- K 9203A rack fan for forced cooling of the air from the racks.

3.5.2 Engineering Support

The power dissipation of the equipment within the cabinet is decisive for determining the fan components. Uniform distribution of the heat load is assumed; the maximum temperature increase is 25 °C.

The average heat dissipation of a HIMA standard cabinet achieved by convection, i.e., without additional aids, is 300 W. This assumes installation of several cabinets next to each other and with their rear side to the wall so that the heat can only be dissipated via the top of the cabinet.

Using a K 9202B cabinet fan, an air flow rate of 200 m³ per hour can be achieved by means of forced cooling. The following total power dissipation has thus to be purged:

Type of standard control cabinet	Power dissipation
M 1511	1000 W
M 1512	1000 W
M 1513	1000 W
M 1514	800 W

Table 2: Power Dissipation of Standard Control Cabinets

The air enters the control cabinet through the air intake filter located in the control cabinet door. For optimal air discharge, ensure 2 RU free space at the bottom of the pivoting frame. If a K 9203A fan rack is the lowest element being installed, only 1 RU free space is needed at the bottom.

3.5.2.1 Installing the HIQuad X System in the Control Cabinet

When installing a HIQuad X system in the control cabinet (pivoting frame), note the following points for the fan concept:

- A K 9203A rack fan must be used above a base rack.
- A maximum of 2 extension racks may be directly positioned one below the other. To install a K 9203A rack fan, 1 RU clearance must be free between 2 successive extension rack blocks.
- From 300 W power dissipation, a roof-mounted fan must be used in the control cabinet.

The following figure shows the side view of a control cabinet with built-in components. The figure shows the air flow course within the control cabinet and the relationship between maximum power dissipation and fan components to be used.

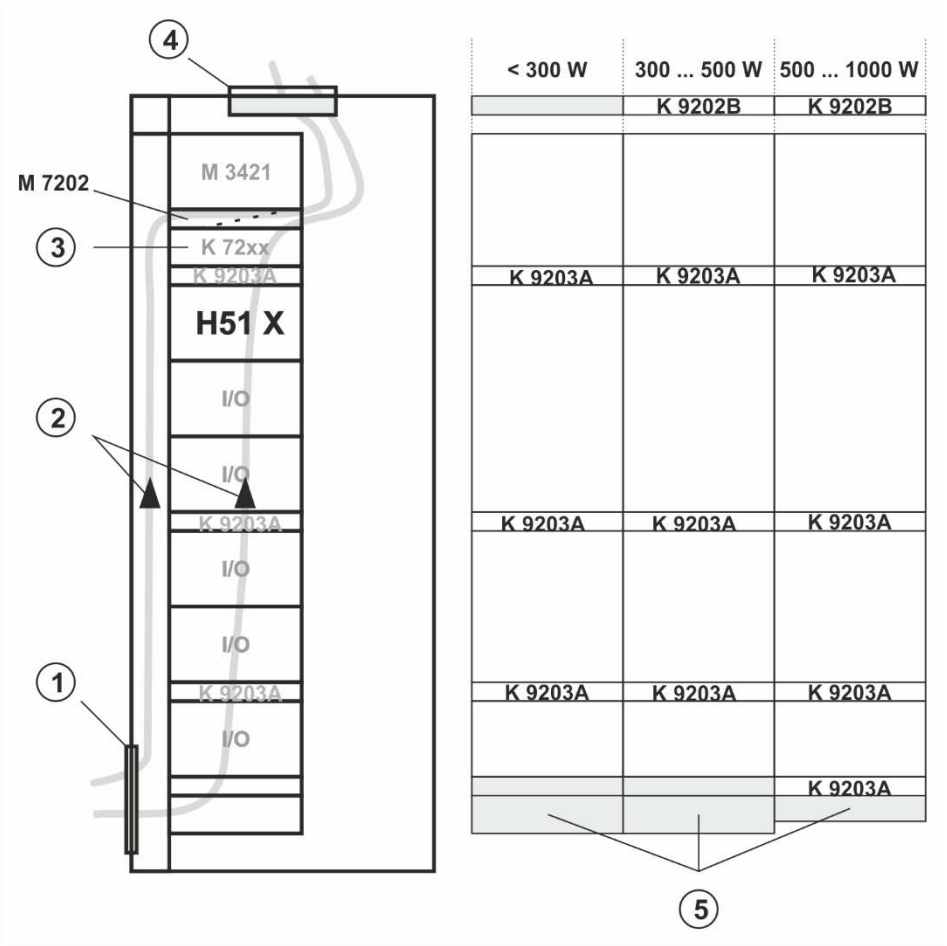

1 Air intake filter mounted in the control cabinet door

2 Air flow

3 Fuse and power distribution modules K 7205, K 7206, K 7212, K 7213 or K 7214

4 Air exhaust through the HIMA K 9202B cabinet fan for mounting on the top internal section of the control cabinet

5 Required clearance for air intake and air exhaust

Figure 12: Fan Concept within the Control Cabinet

Total power dissipation	Maximum power dissipation per extension rack	Fan components
< 300 W	< 50 W	3 x K 9203A
300…500 W	< 50 W	3 x K 9203A + K 9202B
500…1000 W	< 100 W	3 x K 9203A + K 9202B

Table 3: Fan Components as a Function of Power Loss

i When installing I/O modules, always observe the special instructions specified in the corresponding data sheets, e.g., additional fans may be required depending on the module type.

If processor modules, I/O processing modules or communication modules report that the temperature limits have been exceeded for a longer period of time, the existing ventilation concept must be reviewed.

3.5.2.2 Heat Dissipation

The following consideration can also be used to determine the power dissipation. Uniform distribution of the heat load and unhindered natural convection are assumed.

Magnitude	Description	Unit
P_V	Power dissipation (heat capacity) of the electronic components within the device	W
A	Effective enclosure surface (see below)	m²
B	Enclosure width	m
H	Enclosure height	m
T	Enclosure depth	m
K	Coefficient of heat transfer of the enclosure	W/m² K
	Example: Steel plate	Approx. 5.5 W/m² K

Table 4: Definitions for Calculating the Power Dissipation

3.5.2.3 Installation Type

The effective enclosure surface area A as a function of the mounting or installation type is determined as follows:

Enclosure installation type in accordance with VDE 0660, Part 5		Calculation of the enclosure surface A
	Individual enclosure, free-standing on all sides	A = 1.8 x H x (W + D) + 1.4 x W x D
	Individual enclosure for wall mounting	A = 1.4 x W x (H + D) + 1.8 x H x D
	Final enclosure, free-standing	A = 1.4 x D x (W + H) + 1.8 x W x H
	Final enclosure for wall mounting	A = 1.4 x H x (W + D) + 1.4 x W x D
	Central enclosure, free-standing	A = 1.8 x W + H+ 1.4 x W x D + H + D
	Central enclosure, for wall mounting	A = 1.4 x W x (H + D) + H x D
	Central enclosure, for wall mounting, with covered roof area	A = 1.4 x W + H+ 0.7 x W x D + H + D

Table 5: Installation Types for Control Cabinets

3.5.2.4 Natural Convection

When natural convection is applied, the lost heat is dissipated through the enclosure walls. Requirement: The ambient temperature must be lower than the temperature within the enclosure.

The maximum temperature increase $\mathbf{\Delta T_{max}}$ of all electronic devices within the enclosure is calculated as follows:

$$\mathbf{\Delta T_{max} = P_V / k \times A}$$

The power dissipation P_V can be calculated based on the specifications for the electric power rating of the controller and its inputs and outputs.

3.5.2.5 Note on the Standard

The temperature within an enclosure can also be calculated in accordance with VDE 0660, Part 507 (HD 528 S2).

i Considerations about heat must take every component within a cabinet or enclosure into account, including components that are not directly part of the HIQuad X system!

4 Product Description

HIQuad X is a 19-inch system which includes a base rack and one or multiple extension racks.

4.1 Backplane

The different backplanes are firmly screwed to the 19-inch frame, creating the following racks:

H51X base rack	H41X base rack	Extension rack
H51X Backplane	H41X Backplane	Extension rack backplane

Table 6: Rack Backplanes

4.2 19-Inch Frame

The 19-inch frame is the basic mechanical structure of the HIQuad X system. The following figure shows the structure of the 19-inch frame:

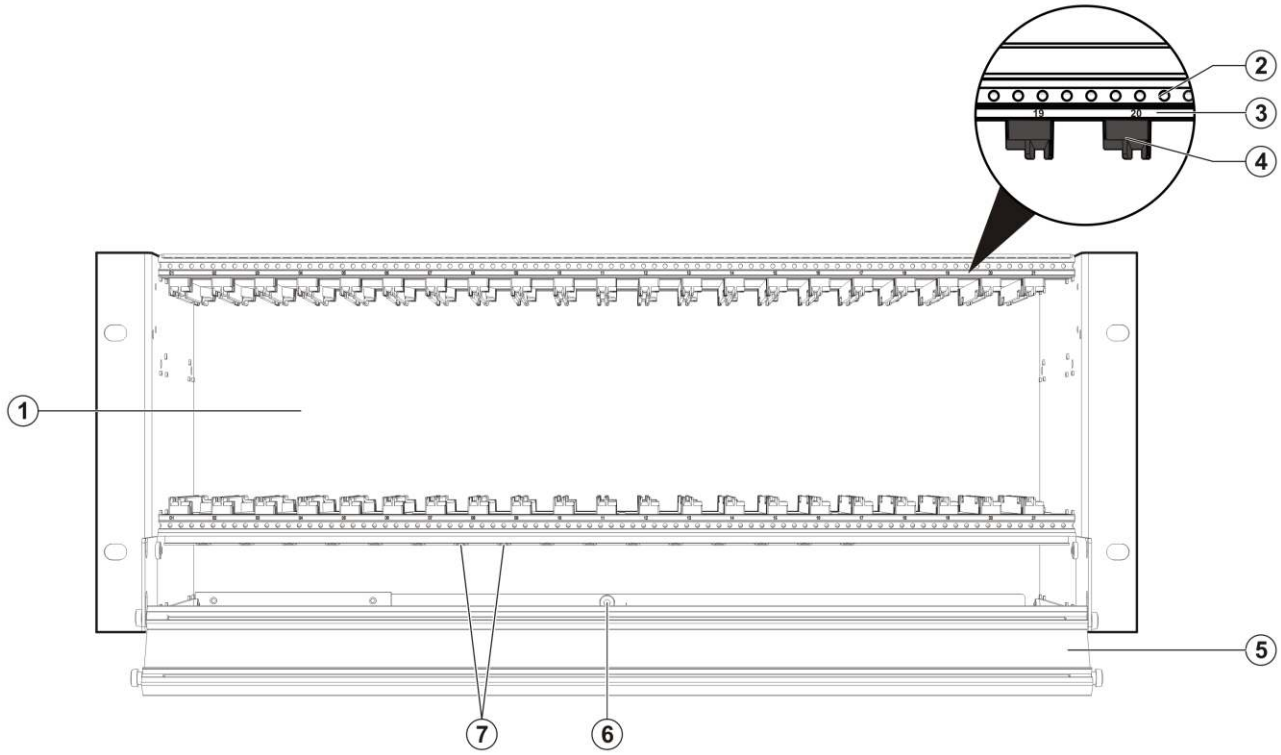

1 19-inch frame with integrated cable tray
2 Threaded inserts
3 Numbering of slots
4 Insertion guide for modules
5 Folding labeling profile
6 General M4 ground terminal on the rear side
7 Grounding bar (functional ground), 1 Faston flat connector (6.3 x 0.8 mm) each for slot 1…slot 16

Figure 13: 19-Inch Frame

The following figure shows the dimensions of the 19-inch frame:

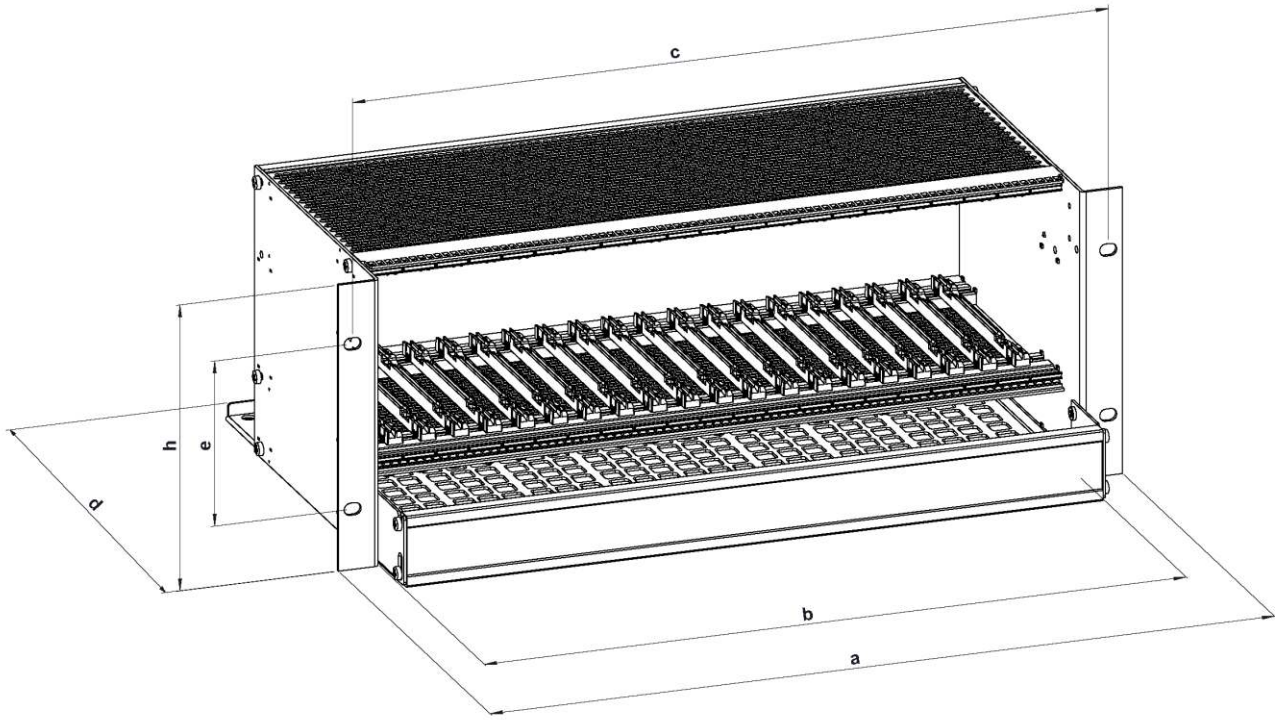

a	External dimensions = 482.6 mm	c	Mounting hole distance = 101.6 mm
b	Mounting space (84 HP) = 84 x 5.08 mm	f	---
c	Mounting hole distance = 465 mm	g	---
d	Mounting depth = 263 mm	h	Rack unit (4 RU) = 4 x 44.45 mm

Figure 14: Dimensions of the 19-Inch Frame

4.2.1 H51X Backplane

The following figure shows the rear side of the H51X backplane:

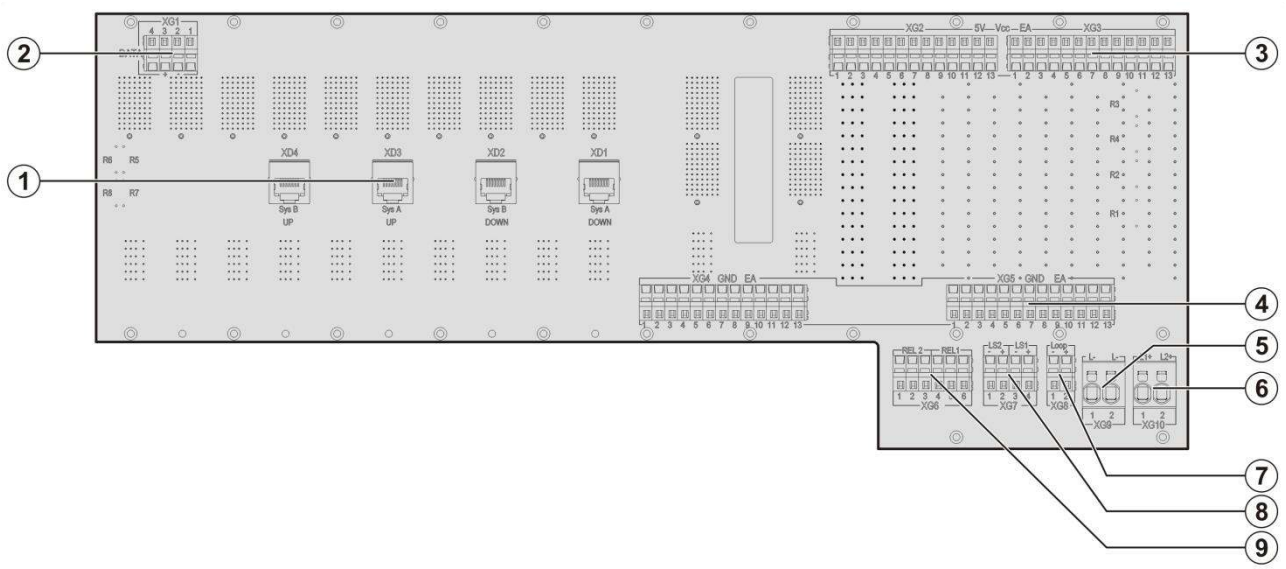

1 System bus connections
Sys. A DOWN (XD1)
Sys. B DOWN (XD2)
Sys. A UP (XD3)
Sys. B UP (XD4)

2 XG1 (DATA) Not applicable (for future use)!

3 5 V power supplies for extension racks, XG2 and XG3

4 Reference potential (GND) for extension racks, XG4 and XG5

5 Connection to L- reference potential (24 V supply), XG9

6 Clamp terminal block for redundant 24 V power supply, XG10

7 Control cabinet diagnostics for future applications, XG8 (loop) Not applicable (for future use)

8 24 V power supply (LS1, LS2) for the F-IOP 01 modules in the extension racks, XG7 (buffer module in slot 6 supplies LS1 and buffer module in slot 7 supplies LS2)

9 Signaling relay contacts for F-PWR 02, XG6

Figure 15: Rear View of H51X Backplane

4.2.1.1 Supply of the H51X Base Rack

For supply and power distribution, HIMA recommends using the following components:

- K 7205: Redundant supply up to a maximum of 63 A total current with fuse protection of up to 18 individual circuits with circuit breakers.
- K 7212: Redundant supply up to a maximum of 35 A total current with 2 decoupling diodes and 2 mains filters, with fuse protection of up to 12 individual circuits with circuit breakers.
- K 7213: Redundant supply up to a maximum of 35 A total current with fuse protection of up to 12 individual circuits with circuit breakers.
- K 7214: Redundant supply up to a maximum of 150 A total current with fuse protection of up to 18 individual circuits with circuit breakers.

The 24 V power supply is connected to the following terminals:

Spring terminal	Cross-section and color	Fuse
XG10.1/.2 (L1+, L2+)	2.5 mm² RD	Maximum 16 A gL
XG9.1/.2 (L-)	2.5 mm² BK	

Table 7: Connection to the 24 V Power Supply

4.2.1.2 Buffered Voltage for LS1+ and LS2+ in F-PWR 02 Buffer Modules

The buffered voltage (LS1+ or LS2+) for extension racks is connected to the following terminals:

Spring terminal	Cross-section and color
XG7.1 (LS2-)	2.5 mm² BK
XG7.2 (LS2+)	2.5 mm² RD
XG7.3 (LS1-)	2.5 mm² BK
XG7.4 (LS1+)	2.5 mm² RD

Table 8: Spring Terminals for Buffered Voltage

4.2.1.3 5 V Power Supply for Extension Racks

The 5 V power supply for extension racks is connected to the following terminals:

Spring terminal	Cross-section and color
XG2.1…XG2.13 (Vcc)	2.5 mm² YE
XG3.1…XG3.13 (Vcc)	2.5 mm² YE
XG4.1…XG4.13 (GND)	2.5 mm² GN
XG5.1…XG5.13 (GND)	2.5 mm² GN

Table 9: Spring Terminals for 5 V Power Supply

4.2.1.4 Signaling Relay for F-PWR 02 Buffer Module, XG6

The signaling relay in the buffer modules is connected to the following terminals:

Spring terminal	Cross-section and color
XG6.1…XG6.3 (REL2)	2.5 mm² GR
XG6.4…XG6.6 (REL1)	2.5 mm² GR

Table 10: Spring Terminals in 5 Signaling Relays for Buffer Module

4.2.2 H41X Backplane

The following figure shows the rear side of the H41X backplane:

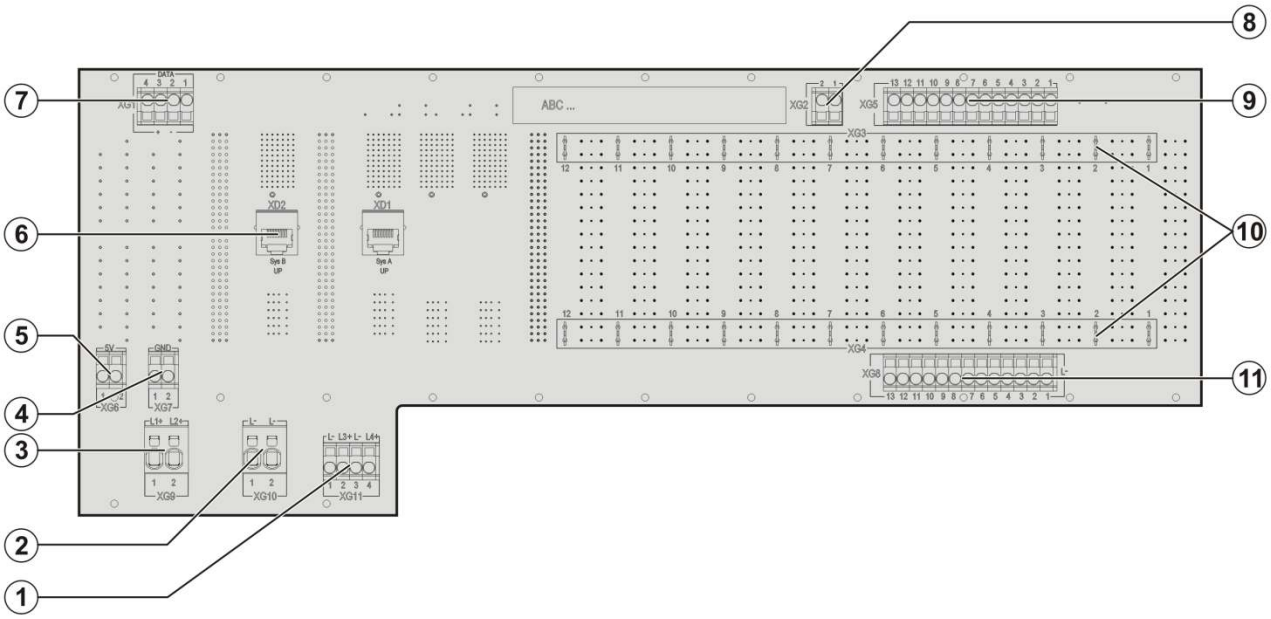

1. 24 V power supply for slots 14…18, XG11. Not applicable (for future use)
2. Connection to L- reference potential (24 V supply), XG10
3. Connection to redundant 24 V power supply for F-PWR 01, XG9
4. Reference potential GND for extension racks, XG7
5. 5 V power supply for extension racks, XG6
6. System bus connections, Sys. A (XD1) and Sys. B (XD2)
7. XG1 (DATA) Not applicable (for future use)
8. Watchdog signal supply, XG2 Not applicable (for future use)
9. Connection of 24 VDC auxiliary voltage for slot 1…slot 3, XG5
10. Cable plug supply
    LS1+…LS12+, slot 1…slot 12; XG3
    LS-, slot 1…slot 12; XG4
11. LS- reference potential for auxiliary voltage (24 VDC), XG8

Figure 16: Rear View of H41X Backplane

4.2.2.1 Supply of the H41X Base Rack

For supply and power distribution, HIMA recommends using the following components:

- K 7205: Redundant supply up to a maximum of 63 A total current with fuse protection of up to 18 individual circuits with circuit breakers.
- K 7212: Redundant supply up to a maximum of 35 A total current with 2 decoupling diodes and 2 mains filters, with fuse protection of up to 12 individual circuits with circuit breakers.
- K 7213: Redundant supply up to a maximum of 35 A total current with fuse protection of up to 12 individual circuits with circuit breakers.
- K 7214: Redundant supply up to a maximum of 150 A total current with fuse protection of up to 18 individual circuits with circuit breakers.

The 24 V power supply is connected to the following terminals:

Spring terminal	Cross-section and color	Fuse
XG9.1/.2 (L1+, L2+)	2.5 mm² RD	Maximum 16 A gL
XG.10.1/.2 (L-)	2.5 mm² BK	

Table 11: Connection to the 24 V Power Supply

4.2.2.2 5 V Power Supply for Extension Racks

The 5 V power supply for the extension rack is connected to the following terminals:

Spring terminal	Cross-section and color
XG6.1/.2 (5 V)	2.5 mm² YE
XG7.1/.2 (GND)	2.5 mm² GN

Table 12: Spring Terminals for 5 V Power Supply

4.2.2.3 24 V Auxiliary Voltages for I/O Modules and I/O Processing Module

The 24 V auxiliary voltage for the cable plugs of the I/O modules and the I/O processing module is connected at the following terminals.

Spring terminal	Cross-section and color
XG5.1…XG5.13	2.5 mm² RD
XG8.1…XG8.13 (L-)	2.5 mm² BK

Table 13: Spring Terminals for 24 V Auxiliary Voltages in I/O Modules

The connection to the 24 V power supply of the cable plugs is performed as shown in Figure 17. The Faston flat connectors XG3 and XG4 are supplied via field terminals XG5 and XG8 in accordance with the corresponding slot number.

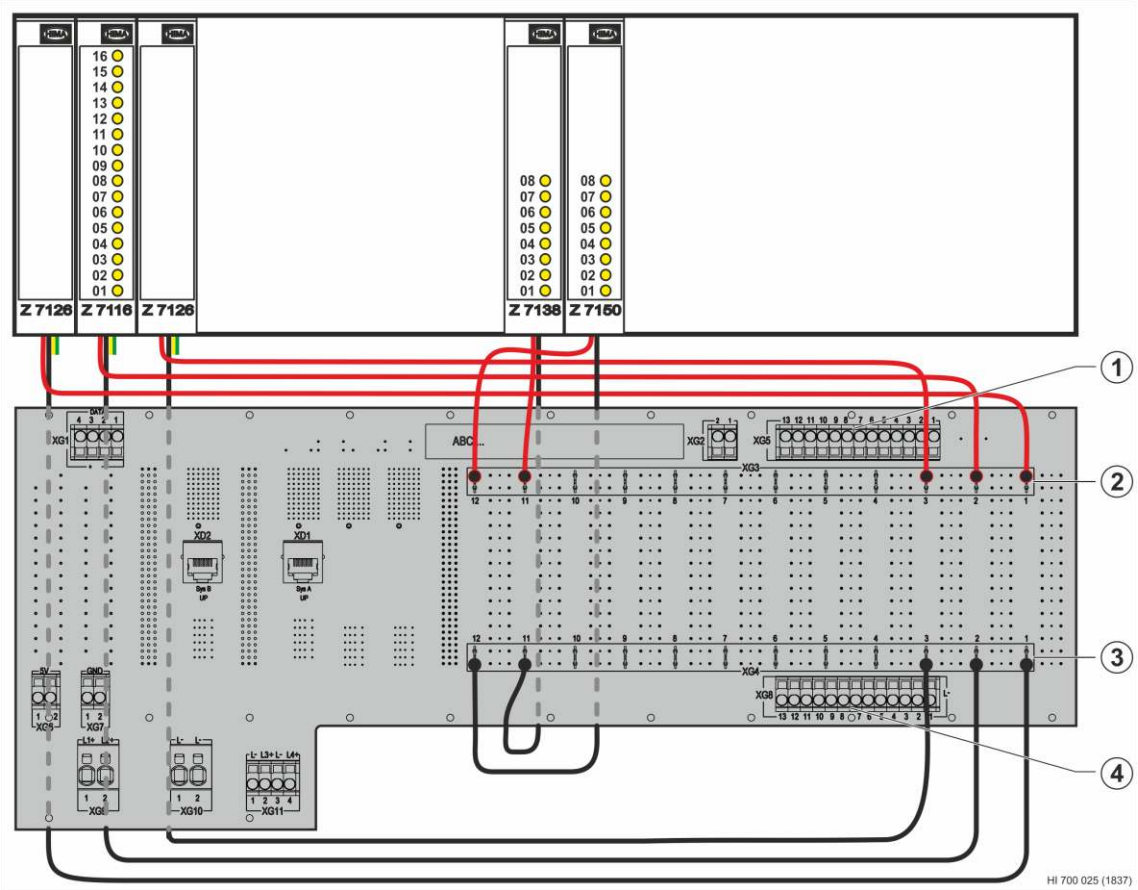

1 XG5: Connection to 24 V auxiliary voltage for slot 1…slot 13; assignment based on slot number

2 XG3: Faston flat connectors for supplying the I/O cable plugs

3 XG4: Faston flat connectors for GND of I/O cable plugs

4 XG8: LS- reference potential for auxiliary voltage (24 VDC)

Figure 17: Connection to the 24 V Power Supply of the Cable Plugs (H41X)

4.2.3 Extension Rack Backplane

The following figure shows the rear side of the extension rack backplane:

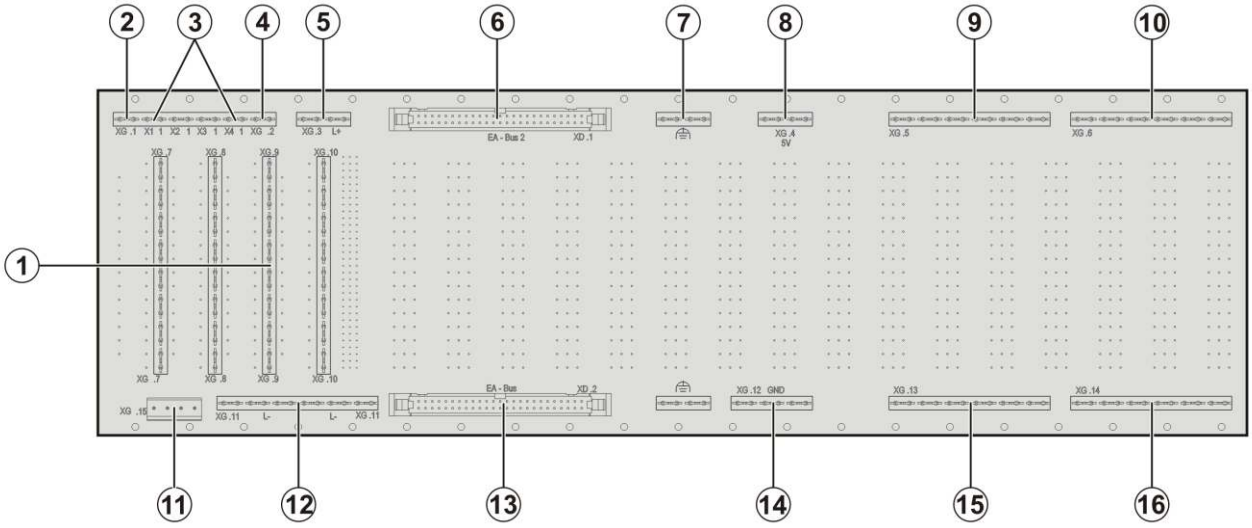

1. 24 VDC supply (L+) for power distribution modules in slots 18…21, XG.7…XG.10
2. Fuse monitoring for power distribution modules, XG.1
3. Jumpers X1…X4 (fuse monitoring)
4. Fuse monitoring for power distribution modules, XG.2
5. 24 VDC supply for I/O processing module, XG.3
6. Do not use it for HIQuad X!
7. PE connection
8. 5 VDC voltage, XG.4
9. Potential distributor, for free use, XG5
10. Potential distributor, for free use, XG6
11. Do not use it for HIQuad X
12. L- (24 VDC) XG.11
13. Do not use it for HIQuad X
14. GND (+ 5 VDC), XG.12
15. Potential distributor, for free use, XG13
16. Potential distributor, for free use, XG14

Figure 18: Rear View of Extension Rack Backplane

⚠ WARNING

In HIQuad X, connectors in pos. 11 XG15, pos. 6 XD1 and pos. 13 XD2 must not be connected. The connectors must be provided with blind covers (within the scope of delivery of the F-IOP module).

Failure to comply with this measure may lead to critical system states.

A HIQuad X controller tailored to the concrete application can be created by selecting appropriate modules.

The controller can be easily adapted to future extensions of the process to be controlled, e.g., by adding modules or extension racks with modules for H51X.

4.2.4 Temperature Monitoring

The HIQuad X system is intended for operation up to a maximum ambient temperature of 60 °C. Sensors located at specific temperature-relevant positions on the modules record the temperature state of processor modules, I/O processing modules and communication modules. The temperature state of these modules is centrally monitored and evaluated by the processor modules (F-CPU 01).

System parameters *Temperature State [1]* and *Temperature State [2]* in the user program can be used to evaluate the temperature state, see Chapter 6.1.3.

The system parameters *Temperature State [1] and Temperature State [2]* signal the measured temperatures as follows:

Temperature threshold	Temperature state	*Temperature State [X]* [BYTE]
≤ 40 °C	Normal	0x00
> 40 °C	**Warning**: Threshold 1 exceeded.	0x01
> 60 °C	**Error**: Threshold 2 exceeded.	0x03

Table 14: Thresholds of the Temperature States

If a value exceeds or falls below one of the temperature thresholds, the temperature state changes.

The transition to the state *Threshold 1* exceeded or *Threshold 2* exceeded does **not** indicate an impairment of the system safety.

The user must implement suitable measures to ensure that the ambient temperature limits specified for the system are met.

i The temperature can be used in the user program, e.g., as additional shutdown condition; however, the temperature is not recorded in a safety-related manner.

Temperature State may be used as an additional shutdown condition.

In the SILworX Hardware Editor, the *Temperature State* system parameter can be used to define if exceeding the temperature threshold should cause a message to be issued.

4.3 Power Supply

HIQuad X requires a 24 V power supply that can be connected as follows:

- Mono connection to one or redundant power supply units, see Figure 19
- Redundant with redundant power supply units, see Figure 20.

HIMA uses red cables for positive potentials (L+) and black cables for negative potentials (L-).

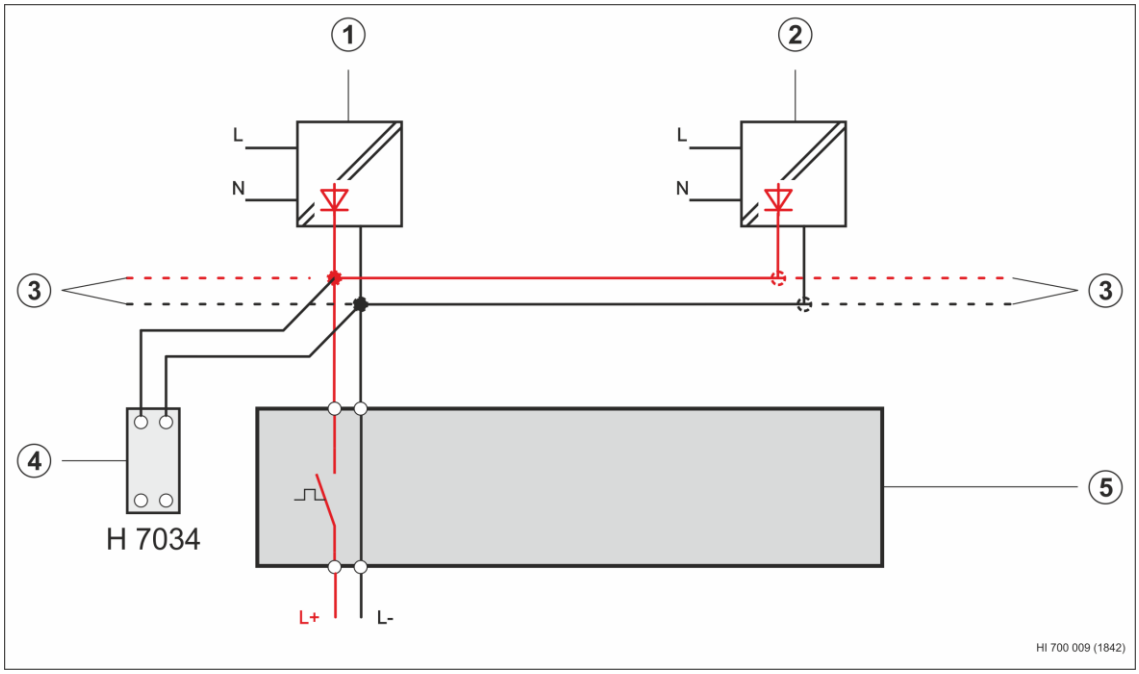

1 Decoupled SELV/PELV power supply unit

2 Decoupled redundant SELV/PELV power supply unit

3 Alternative: 24 VDC power nets

4 H 7034 mains filter

5 Fuse and power distribution module, see Chapter 10

Figure 19: Mono 24 V Power Supply

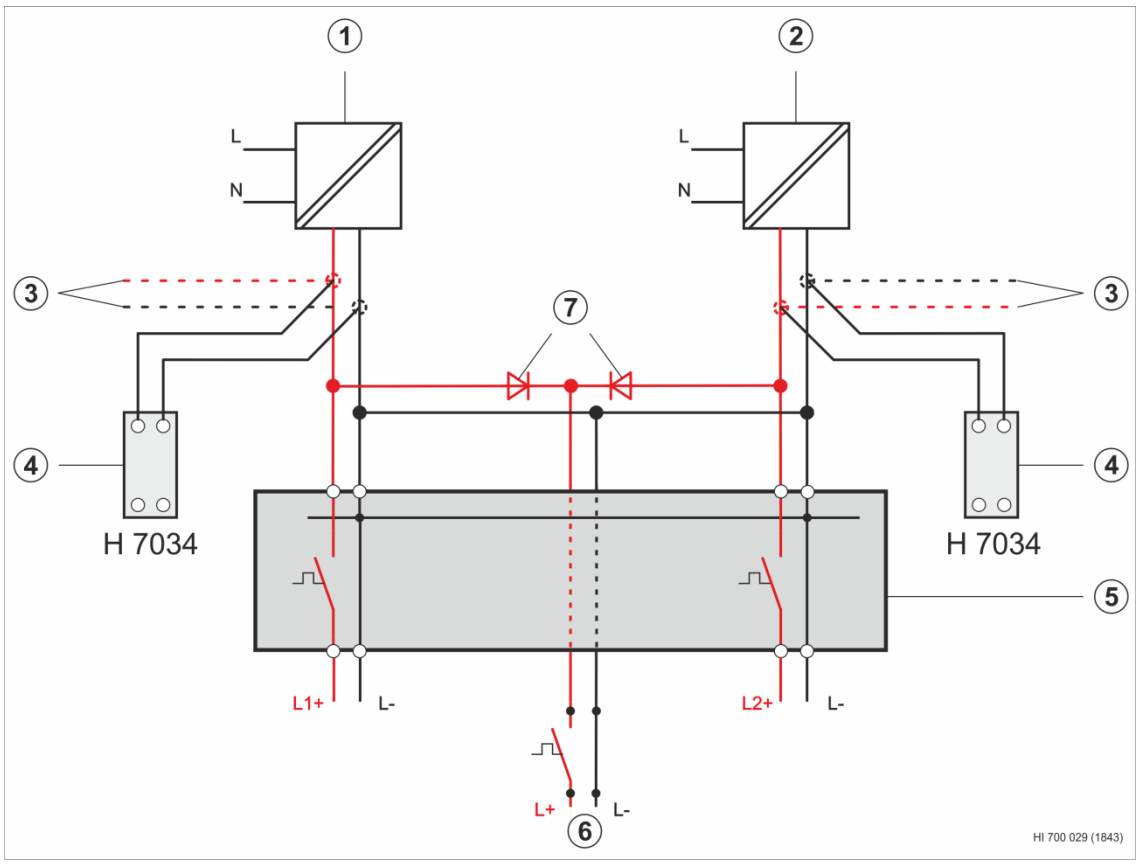

1 SELV/PELV power supply unit
2 Redundant SELV/PELV power supply unit
3 Alternative: 24 VDC power net
4 H 7034 mains filter
5 Fuse and power distribution module, see Chapter 10
6 Alternatively: Connection for mono components, observe decoupling!
7 Decoupling diodes if not included in the power supply units

Figure 20: Redundant 24 V Power Supply

The power supply units must meet the requirements in accordance with SELV or PELV. The power supply units must bridge voltage dropouts of up to 20 ms. HIMA power supply units of the PS 1000 series are designed and suitable for a mean time to failure (MTTF) of 30 years. Power supply units from other manufacturers must be checked to ensure that they meet the mentioned requirements. The requirements for a 24 VDC power net are the same as those applying to power supply units.

HIMA recommends using a H 7034 mains filter to protect the 24 V power supplies transient interference. The filter must be installed close to the 24 V supply to suppress interferences directly at the supply point.

The base racks are equipped with redundant L1+ and L2+ terminals to connect to redundant power supply units, see Figure 15 and Figure 16. In doing so, protective separation of the power supply units must be ensured.

To ensure high availability, operate the HIQuad X systems as follows:

- Use redundant power supplies.
- The power supply units or the 24 VDC power nets must ensure the output voltage never exceeds 31 V.
- Use suitable fuses in the fuse and power distribution module to limit the maximum current input in each base rack to 16 A.
- Users must implement external measures to ensure that the power supply does not fall below 0.8 x U_N (= 19.2 VDC). If no redundant power supply is available, the system responds with failure of individual components or the entire system.

The power distribution modules, K 7205, K 7212, K 7213 and K 7214, include all components required to secure up to 18 individual circuits with circuit breakers. The K 7212 set is additionally equipped with decoupling diodes and mains filters with monitoring relays.

4.3.1 Mono H51X Base Rack (24 VDC)

The 24 V mono power supply is performed for the H51X base rack and the I/O processing modules by connecting to one or redundant power supply units, see Figure 19.

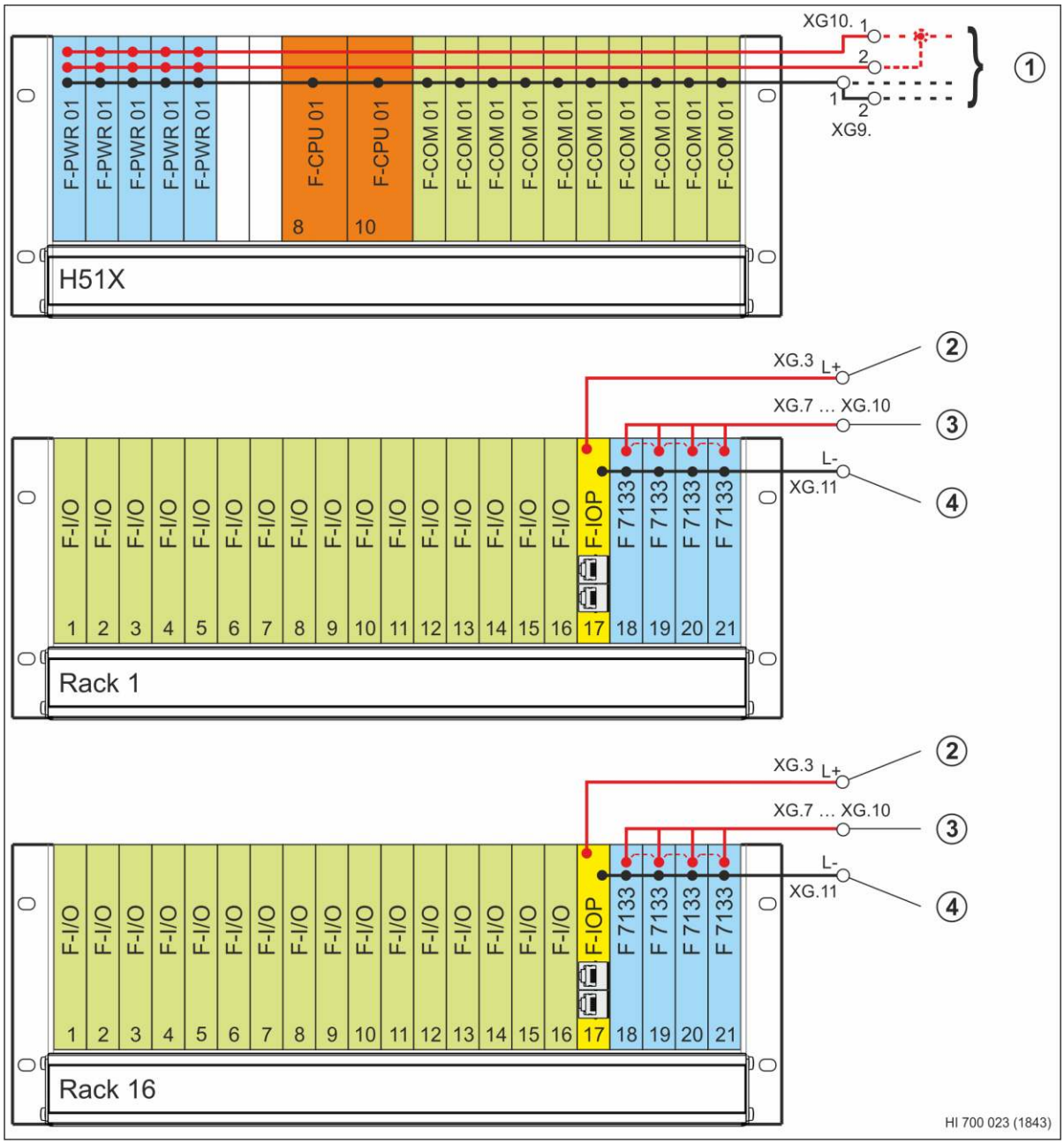

1 Connection to one or redundant power supply units, see Figure 19

2 Connection to 24 VDC for the I/O processing modules from the same source as the H51X base rack

3 Redundant supply of the F 7133 power distribution modules, insert jumpers in accordance with the application

4 Reference potential L-

Figure 21: Mono Connection to H51X Base Rack (24 VDC)

i For redundant power supply, HIMA recommends using the K 7212 power distribution module with decoupling diodes.

4.3.2 Redundant H51X Base Rack (24 VDC)

The redundant 24 V power supply is performed for the H51X base rack by using redundant power supply units and for the I/O level at the connection for mono components, see Figure 20.

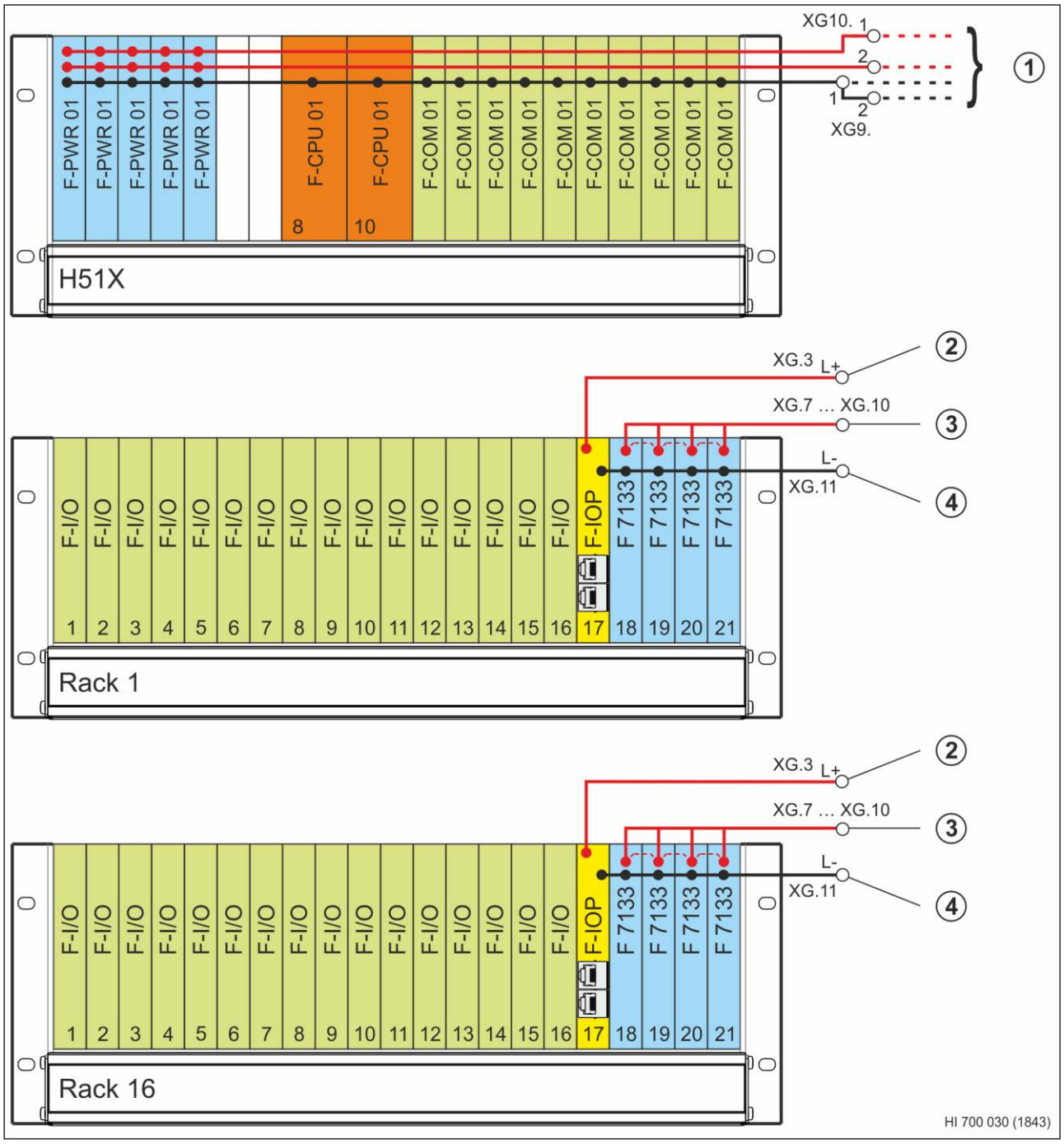

1. Connection to redundant power supply units, see Figure 20
2. Attach to the connector for mono components, see Figure 20
3. Redundant supply of the F 7133 power distribution modules, insert jumpers in accordance with the application
4. Reference potential L-

Figure 22: Redundant Connection to H51X Base Rack (24 VDC)

4.3.3 Redundant H51X Base Rack and I/O Level (24 VDC)

To ensure increased availability, the user can individually structure the redundancy of the I/O processing modules, and thus of the I/O level. The 24 V power supply is performed for the H51X base rack by using redundant power supply units, see Figure 20. The I/O level is supplied redundantly depending on the application, such as shown in Figure 22.

In the example below, one power supply unit (L1+) powers the extension racks with odd rack IDs while a redundant power supply unit (L2+) powers the racks with even IDs. In this example, the redundancy of the I/O level is portioned based on the rack IDs so that operation is ensured even if a power supply unit fails.

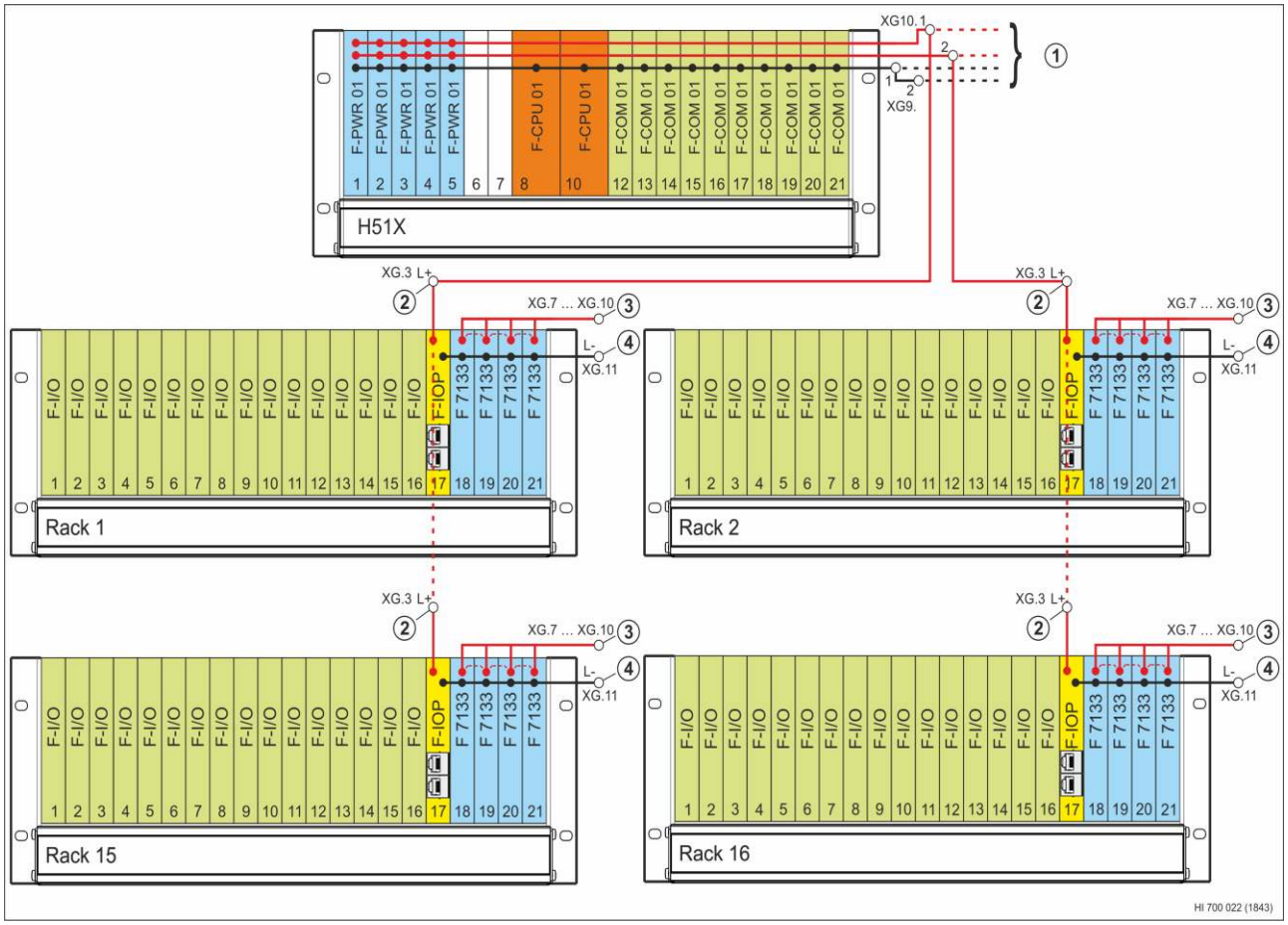

1. Connection to redundant power supply units, see Figure 20
2. XG.3 terminal (L+) for connecting to 24 VDC in accordance with redundant application
3. Redundant supply of the F 7133 power distribution modules, insert jumpers in accordance with the application
4. Reference potential L-

Figure 23: Redundant Connection to H51X Base Rack (24 VDC) and Redundant I/O Level

i For redundant power supply, HIMA recommends using the K 7212 power distribution module with decoupling diodes.

4.3.4 H51X Base Rack (24 VDC) I/O Level via F-PWR 02 Buffer Modules (Optional)

If the power supply units do not meet the requirements for protective separation and for compensating voltage failures of up to 20 ms such as specified in Chapter 4.3, or the requirements are > 20 ms, the buffer modules (F-PWR 02) can be used as an option to supply the I/O processing modules with 24 VDC.

In the following example, the buffer module in slot 6 compensates for voltage dropouts of I/O processing modules in the expansion racks with odd rack IDs. The buffer module in slot 7 compensates for voltage dropouts of the expansion racks with even rack IDs. In doing so, redundant I/O levels can be assembled based on the rack IDs. If one buffer module fails, operation of redundant racks is ensured via the remaining module. The failed buffer module must be replaced immediately to restore the original availability. This structure corresponds to that of the HIQuad HRS system.

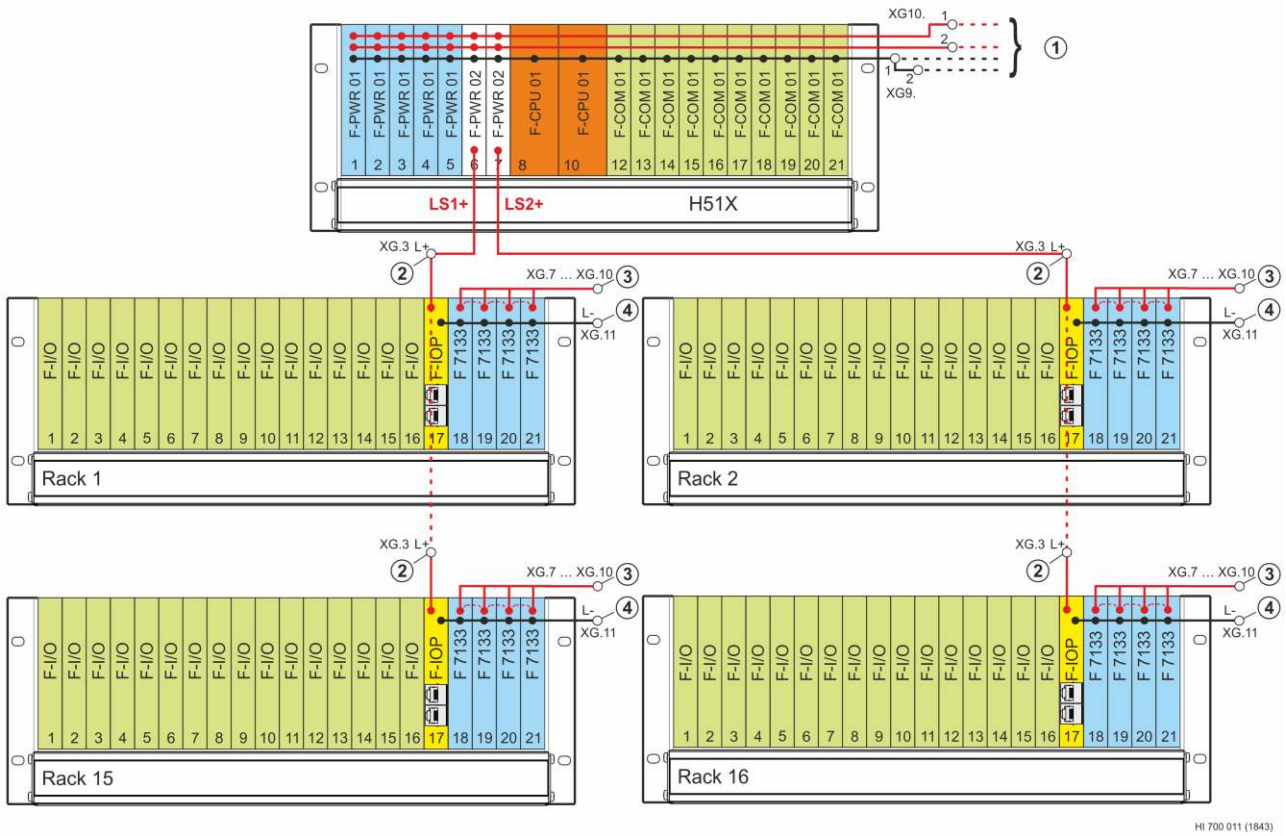

1. Connection to redundant power supply units, see Figure 20
2. Connection to the LS1+/LS2+ power supply of the F-PWR 02 buffer modules in accordance with the desired redundant structure of the I/O level
3. Redundant supply of the F 7133 power distribution modules, insert jumpers in accordance with the application
4. Reference potential L-

Figure 24: Mono Connection to H51X Base Rack (24 VDC)

4.3.5 Mono H41X Base Rack (24 VDC)

The 24 V mono power supply is performed for the H41X base rack and the I/O processing modules by connecting to one or redundant power supply units, see Figure 19.

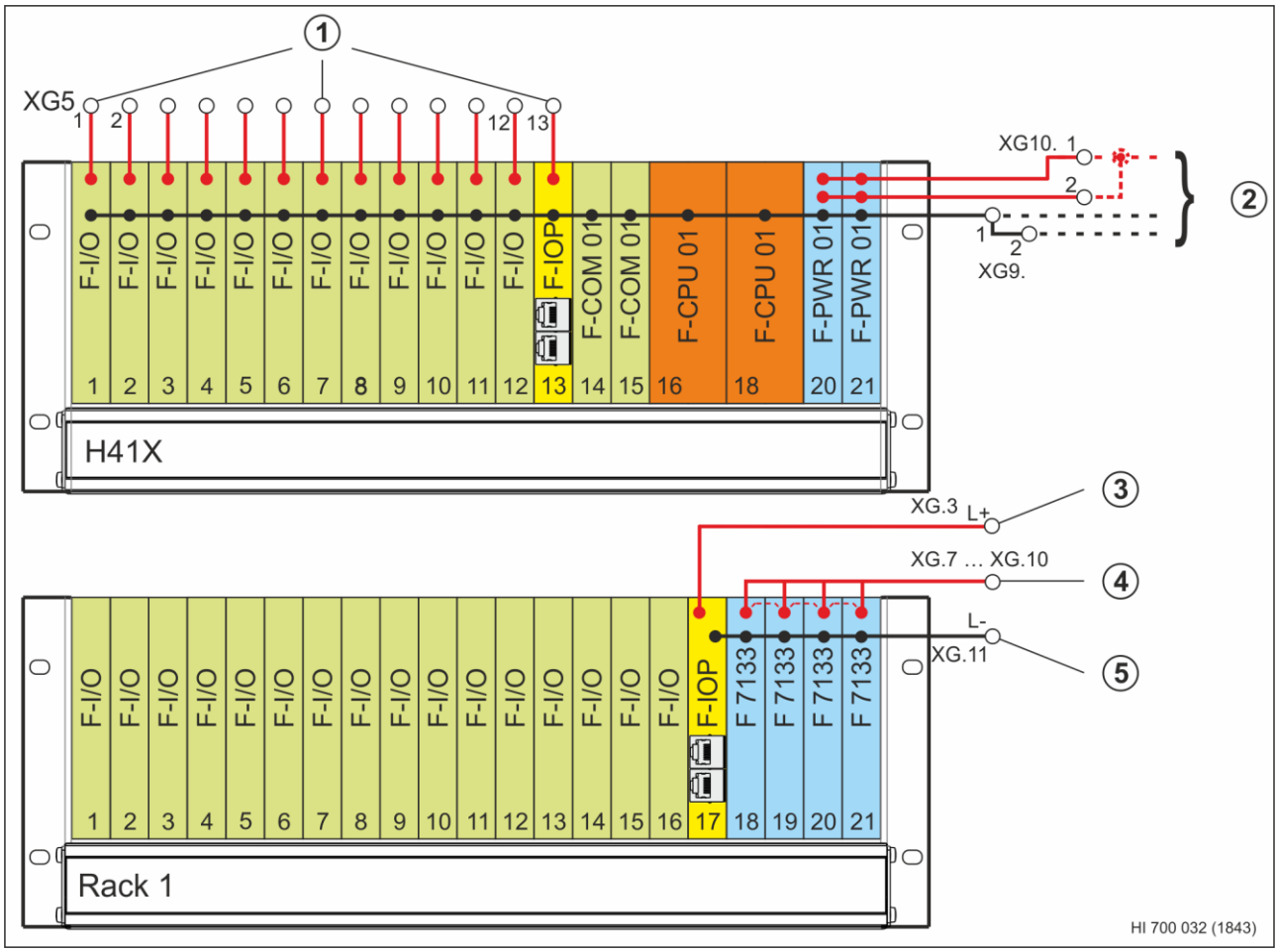

1. Inline terminals XG5.1…XG5.13 to 24 V power supply, XG5.13 for connecting to the I/O processing modules.
2. Connection to one or redundant power supply units, see Figure 19
3. Connection to 24 VDC for the I/O processing module from the same source as the H41X base rack
4. Redundant supply of the F 7133 power distribution modules, insert jumpers in accordance with the application
5. Reference potential L-

Figure 25: Mono Connection to H41X Base Rack

4.3.6 Redundant H41X Base Rack (24 VDC)

The I/O processing module in the H41X base rack and that in the extension rack must be powered from different power supply units to implement redundant I/O levels in the HIQuad H41X system. To this end, e.g., the I/O processing module in the H41X base rack can be connected to L1+ (terminal XG5.13) and the I/O processing module in the extension rack (terminals XG.3, L+), see Figure 20. The power supply units must be able to bridge voltage dropouts of up to 20 ms.

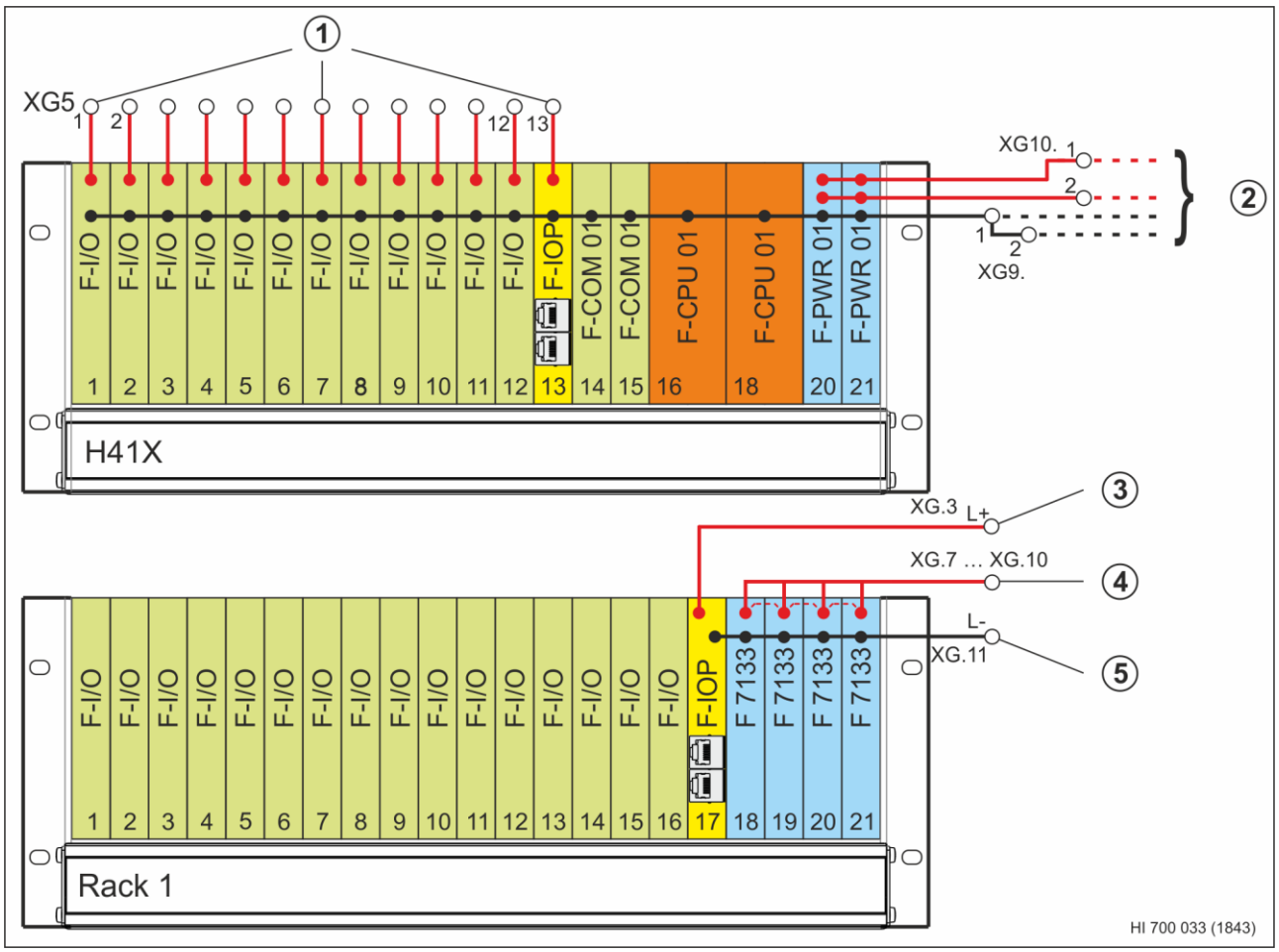

1. Inline terminals XG5.1…XG5.13 to 24 V power supply, XG5.13 for connecting to the I/O processing module in the H41X base rack
2. Connection to redundant power supply units, see Figure 20
3. Terminal XG.3 (L+) for connecting to 24 VDC for the I/O processing module in extension rack 1
4. Redundant power supply of the F 7133 power distribution modules, insert jumpers in accordance with the application
5. Reference potential L-

Figure 26: Redundant Connection to H41X Base Rack and Extension Rack 1

4.3.7 24 V Distribution for HIQuad X

The 24 V power supply is distributed via a fuse and current distribution module connected to the base racks and extension racks.

Each extension rack may be equipped with a maximum of 4 F 7133 power distribution modules. For each F 7133, a back-up fuse (16 A) must be used in the fuse and power distribution module.

Each I/O module in the extension rack is secured by one fuse of the F 7133 power distribution module. Each F 7133 protects 4 slots with 4 A per slot. The assignment of the power distribution modules to the slots of the I/O modules is as follows:

F 7133 power distribution module	Supplies the I/O modules in
Slot 18	Slot 1…4
Slot 19	Slot 5…8
Slot 20	Slot 9…12
Slot 21	Slot 13…16

Table 15: Assignment of F 7133 Power Distribution Modules to I/O Module Slots

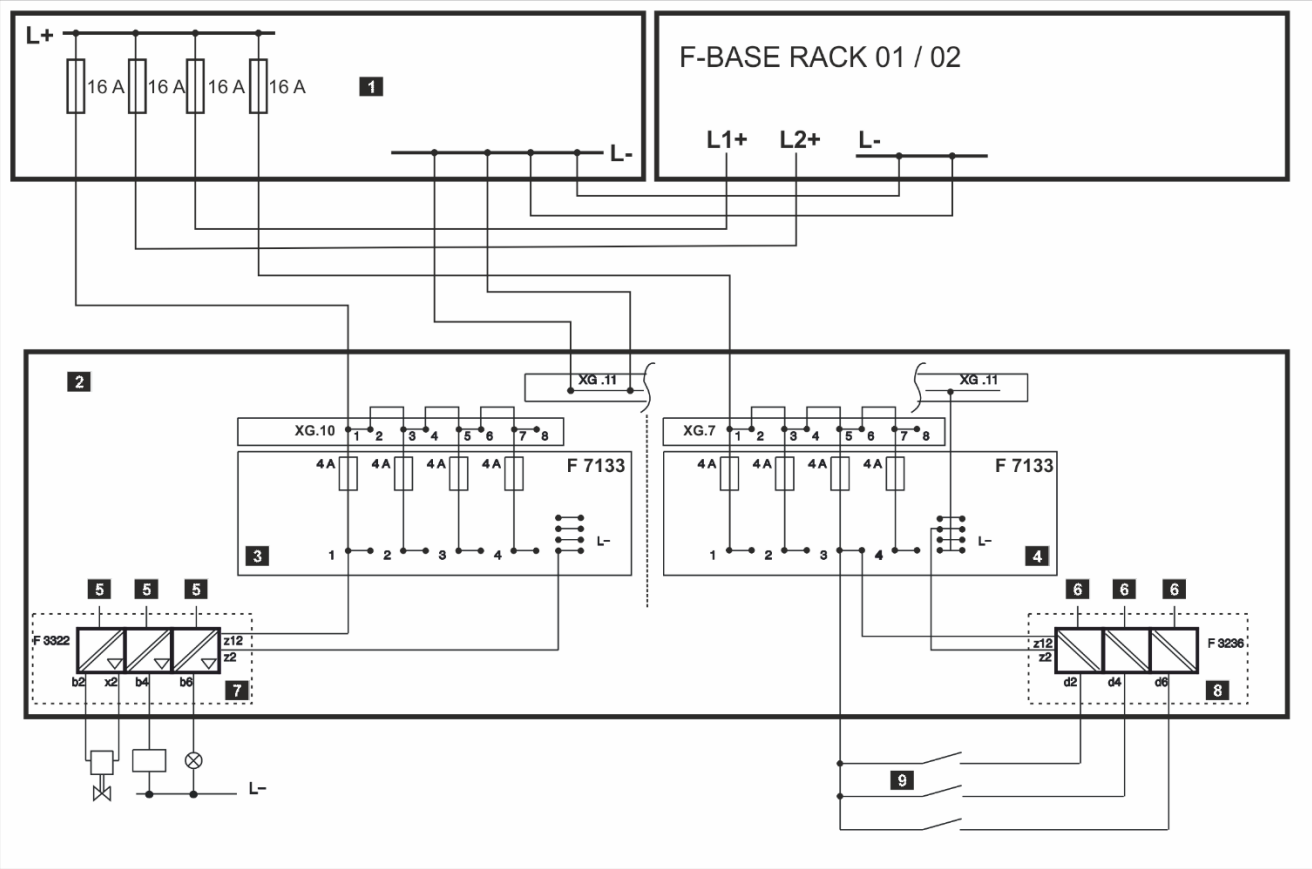

1 Fuse and power distribution module, see Chapter 10.
2 Extension rack (F-BASE RACK 11)
3 F 7133 power distribution module, slot 18
4 F 7133 power distribution module, slot 21
5 Output signals
6 Input signals
7 Output module in slot 1 (example)
8 Input module in slot 15 (example)
9 Transmitter 1…3

Figure 27: 24 VDC Distribution for HIQuad X

The I/O modules are either supplied via the front cable plug or via the backplane PCB. The XG.11 potential distributor is connected to the L- of the fuse and power distribution module. All F 7133 power distribution modules are internally connected to the L- of the potential distributor.

The L- is connected to the I/O modules through the front panel of the power distribution module via the cable plugs.

In Figure 27, the power supply of the transmitter circuits is tapped at the front of the F 7133 power distribution module. The transmitters are protected by the same fuse as the input module 8.

4.3.7.1 5 V Distribution for HIQuad X

To generate 5 V power supply, a base rack can be equipped with up to 5 (H41X: 2) F-PWR 01 power supply units that are connected in parallel. The 5 V power supply is distributed to each slot via the backplane PCB. The 5 V power supply is monitored by the power supply units and its status is transmitted to the processor modules. In the user program, system variables can be used to evaluate the status of the power supply units.

4.3.7.2 5 VDC Distribution for H51X

26 connection points can be used to distribute the 5 V power supply through terminal blocks XG2 and XG3 for 5 V, or XG4 and XG5 for GND. The supply voltage is distributed in a star configuration, see Figure 25. The resistance of a 5 V supply line with a maximum length between H51X base rack and extension rack of 12 m must be ≤ 40 mΩ. If cables longer than 3 m are used, HIMA recommends shielding the cables to protect them against transient interference (LIY-CY), and applying the shield at both sides as flat as possible.

To connect cables with a cross-section larger than 2.5 mm², pin terminals with a pin diameter < 2 mm or other suitable transfer terminals can be used.

The I/O processing modules (F-IOP 01) monitor the 5 V power supply of the racks on which they are installed. If the minimum voltage is underrun, I/O processing modules switch off the I/O level of their rack.

HIMA uses yellow wires for 5 V and green wires for GND. If the H51X system is distributed among several control cabinets, separate power supply units may be necessary to supply 5 V to the control cabinets without base rack, see Chapter 4.3.8 for details.

The wires on the extension racks are connected to the flat connectors XG.4 (5 V) and XG.12 (GND), and the shield to the PE connector. The voltage is distributed to the I/O modules via the backplane PCB.

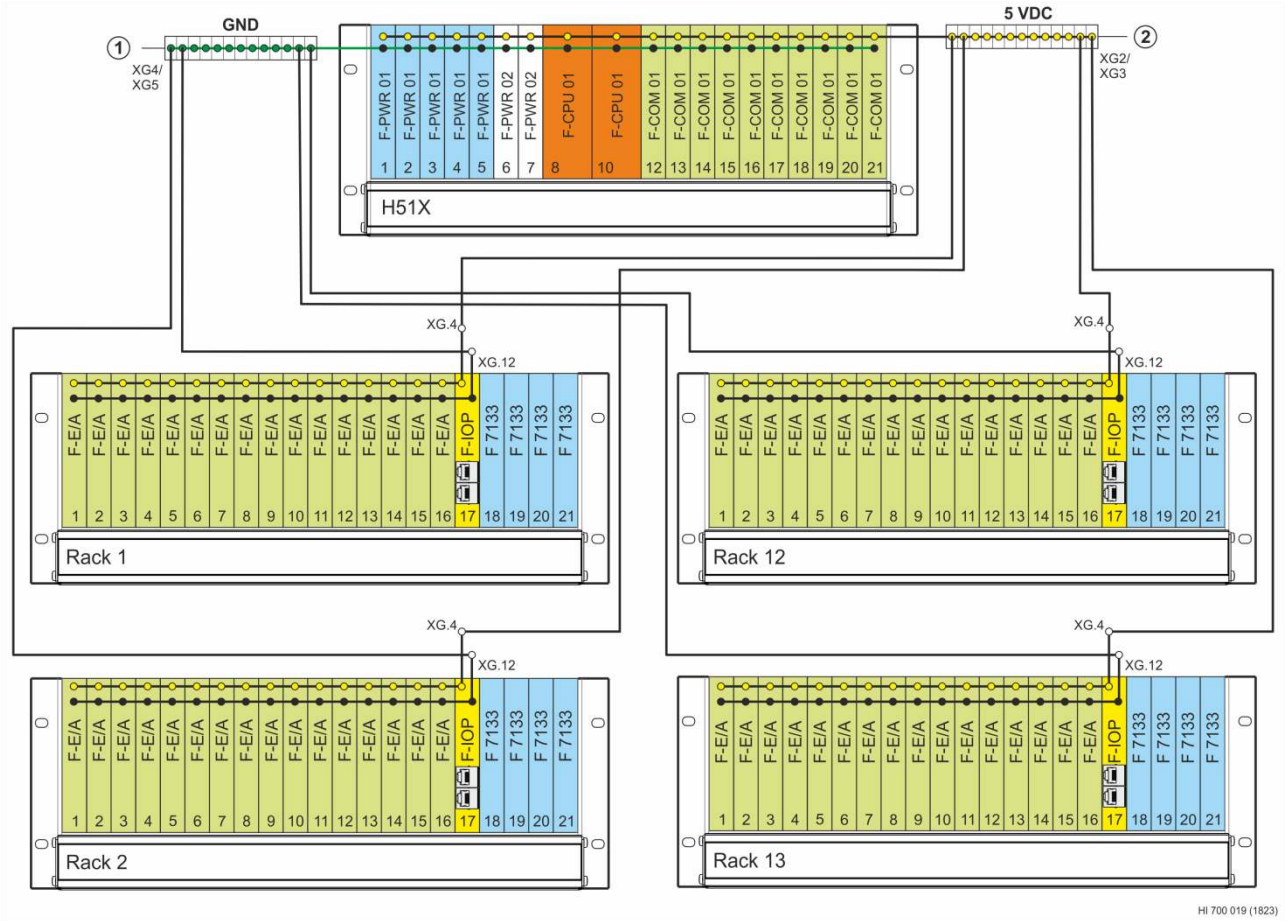

1 GND connectors (XG4 and XG5) on the rack rear side

2 5 VDC connectors (XG2 and XG3) on the rack rear side

Figure 28: Extension Rack Connected to a 5 VDC (H51X)

4.3.7.3 5 VDC Distribution for H41X

The 5 V power supply is distributed to the extension rack through terminal blocks XG6 for 5 V and XG7 for GND. The extension rack must be connected to 2 parallel wires (2.5 mm²) for 5 V and GND in a star configuration so that the 5 V power supply is applied to the I/O processing modules at sufficiently high voltage. HIMA uses yellow wires for 5 V and green wires for GND. The wire length within the control cabinet is limited to 3 m. If the H41X system is distributed among two control cabinets, the 5 V power supply must be provided in the control cabinet without base rack by a separate power supply unit, see Chapter 4.3.8 for details.

The wires on the extension rack are connected to the flat connectors XG.4 (5 V) and XG.12 (GND). The voltage is distributed to the I/O modules via the backplane PCB.

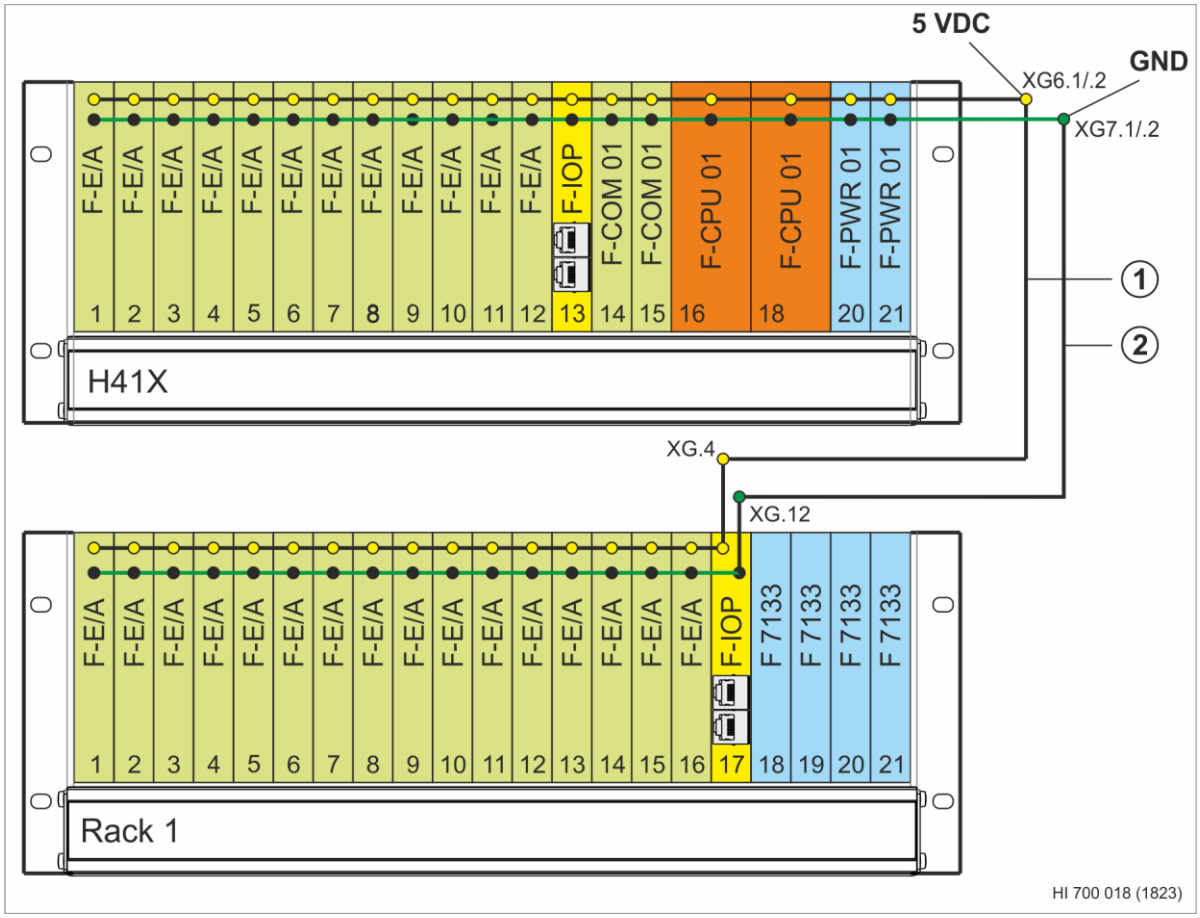

1 5 VDC connector XG6.1.2 (base rack), XG.4 (extension rack).

2 GND connector XG7.1.2 (base rack), XG.12 (extension rack).

Figure 29: Extension Rack Connected to a 5 VDC (H41X)

When designing the 5 V voltage supply, the current consumption of all I/O modules and the modules in the base rack must be taken into account. For details on the power consumption of the individual modules, refer to the module-specific manuals.

For HIQuad H51X:

Number of F-PWR 01 power supply units	Maximum permissible current consumption	Availability design (with a failed power supply unit tolerated!)
1	10 A	---
2	20 A	10 A
3	30 A	20 A
4	40 A	30 A
5	40 A	40 A

Table 16: Allowed Power Consumption in Relation to the Number of Power Supply Units

For HIQuad H41X:

Number of F-PWR 01 power supply units	Maximum permissible current consumption	Availability design (with a failed power supply unit tolerated!)
1	10 A	---
2	10 A	10 A

Table 17: Allowed Power Consumption in Relation to the Number of Power Supply Units

4.3.8 5 VDC Additional Power Supply (H51X)

The 5 VDC power supply can be extended by a H51X additional power supply consisting of the B 9361 set and at least an F 7126 power supply unit.

4.4 System Bus

The HIQuad X system is based on the redundant system buses A and B. Each system bus is controlled and monitored by one processor module located in the base rack. For redundant operation, the system must be operated with two processor modules. In redundant operation, communication runs on both system buses simultaneously. If only one processor module is inserted in the base rack, the system runs in mono operation with only one system bus.

Redundant operation ensures that, if one processor module fails, communication is maintained by the redundant processor module via one system bus. To ensure redundant operation again, the defective processor module must be replaced immediately.

It is not allowed to interconnect the system buses of several HIQuad X systems!

No active elements such as switches may be connected to the system bus.

NOTICE

System malfunction possible!

Using system bus connectors XD1...XD4 on the back of the backplane PCB as normal Ethernet connections may cause the system to malfunction.

- **Only use the system bus connectors XD1...XD4 to connect to the I/O processing modules (F-IOP 01).**
- **Do not interconnect or cross system bus A and system bus B.**

The system buses connect the I/O level to the processor modules via the I/O processing modules (F-IOP 01). To do so, the RJ-45 interfaces on the rear side of the base racks must be connected to the I/O processing modules, see Chapter 3.2. The maximum length of the patch cable between two system bus subscribers is 50 m. The cable diameter must be selected in relation to the cable length.

To perform the connection, use patch cables with the following characteristics:

- At least Cat. 5e (in accordance with IEEE 802.3) for 1 Gbit/s, for industrial applications.
- Industrial RJ-45 connectors on both sides.
- The cable shielding must comply with at least Class D in accordance with ISO/IEC 11801.
- Autocrossover allows the use of both crossover and straight through cables.

Suitable patch cables (Cat. 5e) with industrial connector are available from HIMA in standard lengths.

NOTICE

Communication interference possible!

Use patch cables compliant with industrial standard Cat. 5e or better!

In harsh environments (e.g., subject to temperature changes, electromagnetic interference), low-quality patch cables may cause communication to fail.

The maximum system bus latency can be set to System Defaults or 100 µs using the *Maximum System Bus Latency [µs]* system parameter located in the resource properties. When the Maximum System Bus Latency [µs] is set to System Defaults, the maximum system bus latency is determined by the system. For the 100 µs setting, the maximum system bus latency is set to this value!

For system bus connections running within a control cabinet, the minimum cross-section of patch cables must be 0.2 mm².

For system bus connections running outside a control cabinet, the minimum cross-section of patch cables must be 0.5 mm². If necessary, installation cables with rigid cores must be used instead of patch cables with flexible cores.

4.5 I/O Bus

All I/O modules are connected to the I/O processing module via the I/O bus. The I/O processing module in the H41X base rack (slot 13) and in the extension rack (slot 17) connect the I/O bus to the system buses.

4.6 I/O Watchdog (WD)

A second independent shutdown option is required in safety-related systems. This is ensured by an I/O watchdog signal (24 V). The I/O watchdog is controlled, monitored, and applied to the output modules by the I/O processing modules. The output modules only operate when the watchdog signal is present (high level). If the I/O watchdog signal is switched off, the output modules safely enter the de-energized state.

4.7 Modules

The HIQuad X system is a modular system that can be equipped with various modules. The following modules are available for the system:

- F-CPU 01 processor module
- F-IOP 01 I/O processing module
- F-COM 01 communication module
- I/O modules, see Chapter 4.11
- F-PWR 01 power supply unit (24/5 V)
- F-PWR 02 buffer module

4.8 F-CPU 01 Processor Module

The CPU operating system controls the user programs running in a processor module.

4.8.1 Operating System

Tasks:

- Controlling the cyclic run of the user programs.
- Performing the self-tests of the module.
- Controlling safety-related communication via safe**ethernet.**
- Managing the processor modules' redundancy (synchronization).

4.8.1.1 General Cycle Sequence

Phases:

1. Reading of the input data.
2. Processing of the user program.
3. Writing of the output data.
4. Other activities, e.g., reload processing.

4.8.1.2 Operating System States

States that can be recognized by the user:

- LOCKED
- STOP/VALID CONFIGURATION
- STOP/INVALID CONFIGURATION
- STOP/LOADING OS
- RUN
- RUN/UP STOP

Use the LEDs on the module to recognize the operating state. All LEDs must be taken into account, see the module-specific manuals.
SILworX displays the operating states in the online view.

State	Description	The state is entered:
LOCKED	The processor module is reset to the factory settings (SRS, network settings, etc.).	Connecting the supply voltage to the processor module while the mode switch is set to Init.
STOP/VALID CONFIGURATION	Processor module stopped: A valid configuration is available in the memory.	Stopping the processor module using SILworX.
		Applying the supply voltage ▪ Autostart is disabled in the project configuration or ▪ Mode switch is set to Stop and the processor module starts by itself.
		A fault occurred.
STOP/INVALID CONFIGURATION	Processor module stopped: No valid configuration is available in the memory.	Loading with error.
STOP/LOADING OS	Processor module stopped: The operating system is loaded in the non-volatile memory.	Loading the operating system using SILworX.
RUN	The user program is running.	From the STOP/VALID CONFIGURATION state: SILworX command.
		Applying the supply voltage, the following conditions must be met: ▪ A valid project configuration is loaded. ▪ Autostart is enabled in the project configuration. ▪ The mode switch is not set to Init. ▪ The mode switch is set to Run if the processor module starts by itself.
RUN/UP STOP	The user program is not running. This state is used for testing the inputs/outputs and communication.	From the STOP/VALID CONFIGURATION state: SILworX command SILworX.

Table 18 provides an overview of the operating system states and indicates the conditions for entering them.

State	Description	The state is entered:
LOCKED	The processor module is reset to the factory settings (SRS, network settings, etc.).	Connecting the supply voltage to the processor module while the mode switch is set to Init.
STOP/VALID CONFIGURATION	Processor module stopped: A valid configuration is available in the memory.	Stopping the processor module using SILworX.
		Applying the supply voltage ▪ Autostart is disabled in the project configuration or ▪ Mode switch is set to Stop and the processor module starts by itself.
		A fault occurred.
STOP/INVALID CONFIGURATION	Processor module stopped: No valid configuration is available in the memory.	Loading with error.
STOP/LOADING OS	Processor module stopped: The operating system is loaded in the non-volatile memory.	Loading the operating system using SILworX.
RUN	The user program is running.	From the STOP/VALID CONFIGURATION state: SILworX command.
		Applying the supply voltage, the following conditions must be met: ▪ A valid project configuration is loaded. ▪ Autostart is enabled in the project configuration. ▪ The mode switch is not set to Init. ▪ The mode switch is set to Run if the processor module starts by itself.
RUN/UP STOP	The user program is not running. This state is used for testing the inputs/outputs and communication.	From the STOP/VALID CONFIGURATION state: SILworX command SILworX.

Table 18: Operating System States, States Entered

Table 19 specifies how the user may intervene during the corresponding states.

State	Possible user interventions
LOCKED	▪ Changing the factory settings. ▪ Using a PADT command to stop (STOP state). ▪ Using a PADT command to start (RUN state).
STOP/VALID CONFIGURATION	▪ Loading the user program. ▪ Starting the user program. ▪ Loading the operating system. ▪ Taking preliminary actions for forcing variables.
STOP/INVALID CONFIGURATION	▪ Loading the user program. ▪ Loading the operating system.
STOP/LOADING OS	None. Once the loading process is completed, the processor module stops (STOP state).
RUN	▪ Stopping the user program. ▪ Forcing variables. ▪ Performing the test.
RUN/UP STOP	▪ Using a PADT command to stop (STOP state).

Table 19: Operating System States, User Interventions

i The cycle time increases by the number of modules used in the system. This applies irrespective of whether or not the modules are included in the configuration.

- **Connecting additional extension racks with several modules during operation can cause the watchdog time to be exceeded!**

4.8.2 Behavior in the Event of Faults

If faults occur, the processor module enters the error stop state and tries to restart. It performs a complete self-test which can also cause another error stop.

If a fault is still present, the module restarts with reduced functionality to prevent a reboot loop.

Once the processor module has properly run for one minute, the next error stop to occur is considered the first *error stop* attempting a restart.

i Use the PADT for troubleshooting and removing the cause of the fault, e.g., by loading a new application.

4.9 F-IOP 01 I/O Processing Module

The I/O processing module manages the I/O bus of the H41X base rack and that of the extension racks. The I/O bus is used to exchange process data between I/O modules and the I/O processing module. The module's tasks include exchanging data with the processor modules and providing the watchdog signal to the output modules via system bus A and system bus B.

4.10 F-COM 01 Communication Module

The communication module is equipped with 2 Ethernet interfaces and 1 fieldbus interface allowing the HIQuad X system to communicate with external systems. The module is approved for use in the safety-related HIQuad X system and can be employed to transport safety-related protocols.

4.11 I/O Modules

The following table shows the I/O modules that can be used for HIQuad X:

Module	Cable plug	Channels	SIL	Type	Data sheet HI number
F 3221	Z 7116 / 3221	16	---	DI	HI 803 174 E
F 3224A	Z 7114 / 3224	4	---	DI; (Ex)i	HI 803 175 E
F 3236	Z 7116 / 3236	16	3	DI	HI 803 176 E
F 3237	Z 7108 / 3237	8	3	DI	HI 803 177 E
F 3238	Z 7008 / 3238	8	3	DI; (Ex)i	HI 803 178 E
F 3240	Z 7130 / 3240	16	3	DI 110 VDC	HI 803 179 E
F 3248	Z 7130 / 3248	16	3	DI 48 VDC	HI 803 180 E
F 3322	Z 7136 / 3322	16	---	DO 0.5 A	HI 803 181 E
F 3325	Z 7025 / 3325	6	---	Supply module	HI 803 182 E
F 3330	Z 7138 / 3330	8	3	DO 0,5 A	HI 803 183 E
F 3331	Z 7138 / 3331	8	3	DO 0.5 A	HI 803 184 E
F 3333	Z 7134 / 3333	4	3	DO 2 A	HI 803 185 E
F 3334	Z 7134 / 3334	4	3	DO 2 A	HI 803 186 E
F 3335	Z 7035 / 3335	4	3	DO; (Ex)i	HI 803 187 E
F 3349	Z 7150 / 3349	8	3	DO 0.5 A	HI 803 188 E
F 3422	Z 7139 / 3422	8	---	Relay 60 VDC	HI 803 189 E
F 3430	Z 7149 / 3430	4	3	Relay 110 VDC	HI 803 190 E
F 5220	Z 7152 / 5220	2	3	Counter	HI 803 191 E
F 6215	Z 7127 / 6215	8	---	AI	HI 803 192 E
F 6217	Z 7127 / 6217	8	3	AI	HI 803 193 E
F 6220	Z 7062 / 6220	8	3	Thermocouple; (Ex)i	HI 803 194 E
F 6221	Z 7063 / 6221	8	3	AI; (Ex)i	HI 803 195 E
F 6705	Z 7126 / 6705	2	3	AO	HI 803 196 E
F 6707	Z 7126 / 6706	2	---	AO	HI 803 197 E

Table 20: Possible I/O Modules to Be Used in HIQuad X

4.11.1 Scope of Application of the I/O Modules

Refer to the safety manual (HI 803 209 E) for more information on the standards used to certify the I/O modules.

i For the scope of application of the I/O modules, observe the revisions, see the modernization manual (HI 803 235 E).

4.11.2 Mounting Position

The I/O modules must be mounted vertically. The vertical mounting position automatically results from the horizontal position of the rack within a control cabinet.

4.12 Noise Blanking

This chapter describes how noise blanking of I/O modules operates in the HIQuad X system.

4.12.1 Effects of Noise Blanking

Noise blanking suppresses transient interference to increase the system availability. It ensures that the system triggers a safety-related response to existing interferences within the configured time.

Noise blanking can be activated for I/O modules. For details, refer to the SILworX Hardware Editor and the module-specific manuals.

If an interference is blanked out, the system automatically processes the last valid input and output values instead of the currently disturbed values. The time in which noise can be blanked out is limited by the safety time, watchdog time and the cycle time.

The maximum noise blanking time can be calculated using the following equation:

Maximum noise blanking time = safety time - (2 x watchdog time)

The greater the noise blanking time value, the longer the interference can be blanked out. Since an interference can be present for up to one cycle before it is detected while reading in the values, the minimum noise blanking time can be determined by subtracting a cycle from the maximum noise blanking time value.

Minimum noise blanking time = maximum noise blanking time - cycle time

Noise blanking is effective if the cycle time value is less than the noise blanking time.

4.12.2 Configuring Noise Blanking

To blank out as many cycles as possible, the safety time must be set as large as possible taking the process safety time into account. At the same time, the value set for the watchdog time should be as low as possible, but sufficiently large to allow reload and synchronization of an additional processor module. Refer to the safety manual (HI 803 209 E) for further details on the various time parameters and their application.

Configure noise blanking in accordance with the following examples:

Example	1	2	3
Safety Time [ms]	600	2000	1000
Watchdog Time [ms]	200	500	500
Target Cycle Time [ms]	100	200	200
Max. Noise Blanking Time [ms]	200	1000	0
Min. Noise Blanking Time [ms]	100	800	0

1) Default setting in SILworX.

2) No noise blanking is possible in example 3 since the noise blanking time is less than the cycle time.

Table 21: Example for Calculating the Minimum and Maximum Noise Blanking Time

4.12.3 Noise Blanking Sequence

The following examples illustrate the sequence of noise blanking:

- A transient interference is blanked out.
- An interference present for longer than the maximum noise blanking time triggers the safe response.

Example 1: Transient interference is successfully blanked out

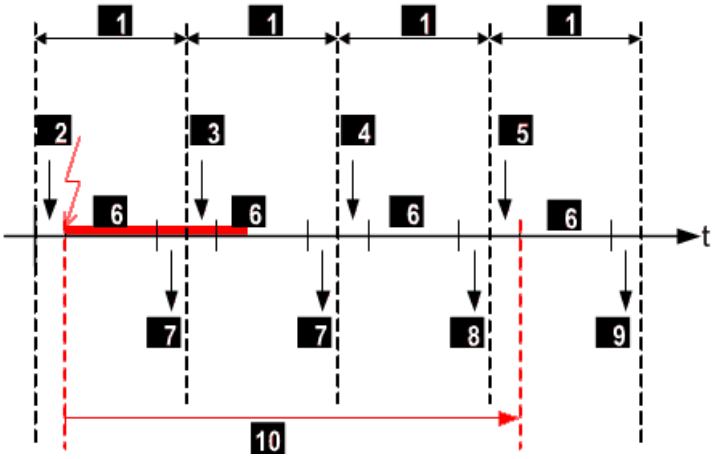

1	Cycle, duration = watchdog time	6	Processing (in all cycles)
2	Reading in cycle 1	7	Output process in cycle 1 and 2
3	Reading in cycle 2	8	Output process in cycle 3
4	Reading in cycle 3	9	Output process in cycle 4
5	Reading in cycle 4	10	Duration of safety time

Figure 30: Transient Interference

In example 1, valid input values 2 are read within one cycle. For this cycle, the system processes the valid input values, even though an interference occurred directly upon completion of the read-in process. If the interference is still present in the following cycle during the read-in process 3, the module detects the interference and the system decides if noise blanking can be performed at this point in time based on the following rule:

Safety time - elapsed time - (2 x watchdog time) > 0

Elapsed time = Time interval between the moment, in which the last valid values were read in, and the moment, in which the interference was detected.

In this example, noise blanking is possible since the interference is present for less than a cycle (= elapsed time) and two additional cycles (2 x watchdog time) are available for triggering a safe response. For this cycle, the system processes the last valid input values of 2 and no fault response is triggered. The transient interference was successfully blanked out.

If the interference is no longer present in 4, new valid values are read in and processed. If noise blanking is not active, the system immediately triggers the defined fault response during the read-in process 3.

Example 2: Triggering a safety-related response when interference occurs

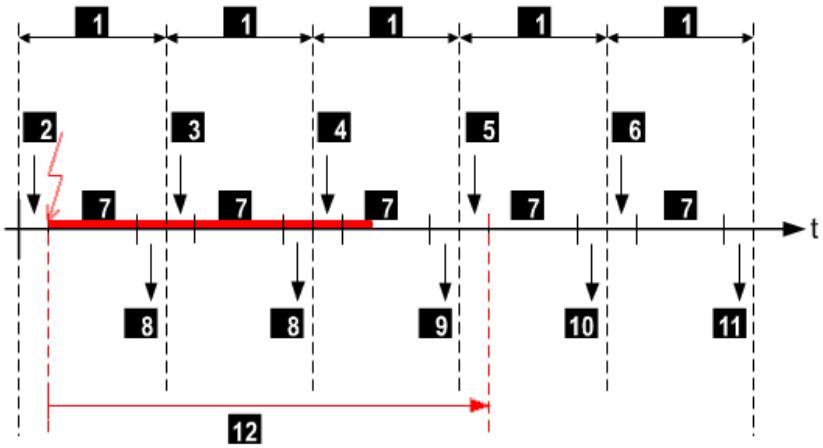

1	Cycle, duration = watchdog time	7	Processing (in all cycles)
2	Reading in cycle 1	8	Output process in cycle 1 and 2
3	Reading in cycle 2	9	Output process in cycle 3
4	Reading in cycle 3	10	Output process in cycle 4
5	Reading in cycle 4	11	Output process in cycle 5
6	Reading in cycle 5	12	Duration of safety time

Figure 31: Interference Triggers a Safe Response

In example 2, valid input values 2 are read within one cycle. For this cycle, the system processes the valid input values, even though an interference occurred directly upon completion of the read-in process. If the interference is still present in the following cycle during the read-in process 3, the module detects the interference and the system decides if noise blanking can be performed at this point in time based on the following rule:

Safety time - elapsed time - (2 x watchdog time) > 0

Noise blanking is possible in the 1st and 2nd cycle since the interference is present for less than a cycle (= elapsed time) and two additional cycles (2 x watchdog time) are available for triggering a safe response. For this cycle, the system processes the last valid input values of 2 and no defined fault response is triggered. The transient interference was successfully blanked out.

In case of a ratio of safety time/watchdog time = 3/1, as in example 2, two cycles are still available for the safe response

If the interference is still present in the next read-in process 4, the fault response must be triggered in that cycle. The fault response must be triggered no later than when the outputs are written to 9. At the next output moment 10, the safety time has already expired.

If noise blanking is not active, the system immediately triggers the defined fault response during the read-in process 3.

4.12.4 Effective Direction of Noise Blanking

The effective direction must be observed when considering noise blanking and output noise blanking, see Figure 32 and the following chapters.

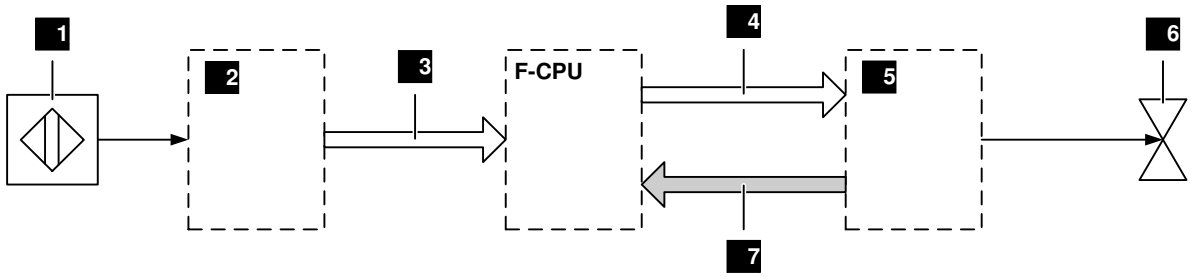

1 Sensor
2 Input module
3 Effective direction from the input module to the processor module
4 Effective direction from the processor module to the output module
5 Output module
6 Actuator
7 Effective direction from the output module to the processor module

Figure 32: Effective Direction Associated with Noise Blanking and Output Noise Blanking

4.12.4.1 Effective Direction from the Input Module to the Processor Module (3)

Noise blanking with effective direction from the input module to the processor module is performed by the processor module. Noise blanking suppresses the transient interference on the input module and on the buses (system bus and I/O bus). Noise blanking on the input module can be deactivated in the properties (SILworX) (default = Activated), see the input module manuals. Noise blanking on the buses is always active and cannot be deactivated in SILworX.

4.12.4.2 Effective Direction from the Processor Module to the Output Module (4)

Noise blanking with effective direction from the processor module to the output module is performed by the output module and is always active. Noise blanking suppresses the transient interference on the bus.

4.12.4.3 Effective Direction from the Processor Module to the Output Module (7)

Noise blanking with effective direction from the output module to the processor module on the system bus is performed by the processor module. Noise blanking suppresses status acknowledgments of the output module such as SC/OC detection. Noise blanking on the output module can be deactivated in the properties (SILworX) (default = Activated), see the output module manuals.

4.13 Communication

Communication with other HIMA systems or third-party systems occurs via communication modules. HIQuad X supports the following communication protocols:

- safe**ethernet** (safety-related).
- Standard protocols.

For details on communications and supported standard protocols, refer to the communication manual (HI 801 101 E).

4.13.1 Licensing

Standard protocols can only be run in the long term with a valid license. For some protocols, a software activation code is required. For activation, see Chapter 4.15.

i Order a software activation code on time!
After 5000 operating hours, communication continues until the controller is stopped. Afterwards, the user program cannot be started without a valid software activation code for the protocols used in the project (invalid configuration).

4.14 Connecting the PADT to the System

The physical connection between the PADT and a HIQuad X system is established by connecting the Ethernet interface of a PC to an RJ-45 socket (X1, X2) of a processor module. A PADT (programming and debugging tool) is a personal computer (PC) that is running the SILworX programming tool.

The connection requires a patch cable that complies with Cat. 5e or better and is connected to a free PC network card.

A HIQuad X system can simultaneously communicate with up to 5 PADTs. If this is the case, only one programming tool can access the controller with write permission. The remaining PADTs can only read information. If they try to establish a writing connection, the controller only allows them a read-only access.

4.15 Licensing

A license is required for using some communication protocols of the HIQuad X system, refer to the communication manual (HI 801 101 E).

The licenses can be provided by HIMA upon request. To activate the function, HIMA provides an activation code which can be entered with the PADT in the configuration. The activation code is bound to the system ID of the PES.

The activation code is generated on the HIMA website at: `www.hima.com/en` under Products & Services -> Product Registration. Refer to the corresponding page for more details.

To activate a function with an activation code

1. Generate the software activation code on the HIMA website `www.hima.com/en` using the system ID of the controller (e.g., 10 000) and the license numbers received from HIMA. To do so, follow the instructions provided on the HIMA website:

i The software activation code is intrinsically bound to this system ID. A license can only be used once for a specific system ID. For this reason, only activate the code when the system ID has been uniquely defined.

2. In SILworX, create a license management for the resource, if not existing.
3. Create a license key in the license management and enter the activation code.
4. Compile the project and load it into the controller.

► The function is activated.

5 Redundancy

The conceptual design of the HIQuad X system is characterized by high availability. To this end, all system components can be operated redundantly. The following chapter describes redundancy aspects for the various system components.

i A redundancy system only increases the system availability, but not its safety integrity level (SIL)!

5.1 Processor Module Redundancy

A HIQuad X system can be configured as a mono system with only 1 processor module, or as a high-availability redundancy system with 2 redundant processor modules.

Processor modules only operate redundantly, if there is a digital depiction of the processor modules in the Hardware Editor (SILworX) and the configuration is compiled with these settings.

5.1.1 Reducing Redundancy

A HIQuad X system with redundant processor modules continues its safety-related operation even if one of the processor modules is no longer available, e.g., because a module failed or was removed. Safety-related operation is still ensured even if one of the two redundant processor modules fails.

5.1.2 Increasing Redundancy

If a new processor module is added to a running HIQuad X system, it automatically synchronizes with the configuration of the existing processor module. Safety-related operation is ensured. Requirements:

- The user program run by the processor module is redundantly configured (default setting).
- The redundant slot for the processor module is not in use.
- At least one system bus is operating.
- The position of the mode switch on the added processor module is *Stop* or *Run*.
- The operating system of the added processor module has either the same version as the existing processor module or a higher one.

5.2 Redundancy of I/O Modules

In terms of redundancy, two cases can be distinguished for input and output modules:

- Module redundancy.
- Channel redundancy.

HIMA recommends defining module redundancy before channel redundancy. HIQuad X supports dual redundancy of input and output modules. Higher redundancy levels are possible using the corresponding programming logic. For redundant connection of a sensor or actuator to several I/O modules, observe the input and output values permitted for I/O modules.

5.2.1 Module Redundancy

Two I/O modules of the same type can be combined in the SILworX Hardware Editor to form a redundancy group. To ensure that availability of HIQuad X is increased as required, the I/O modules of the redundancy group must be inserted in different racks:

i To increase availability of HIQuad X, redundant I/O modules must be inserted in different racks:

5.2.2 Channel Redundancy

Channel redundancy is only possible within a redundancy group. Only channels with the same channel number can be defined as redundant. In such cases, the programming tool automatically allocates a global variable, which is assigned to a channel (channel number), to both channels of the redundant modules. Refer to the Hardware Editor section of the SILworX online help for more details.

5.3 System Bus Redundancy

The HIQuad X system can be operated with redundant system bus A and system bus B, see Chapter 3.

Requirements for redundant operation:

- Use of 2 processor modules per base rack.
- Suitable configuration in the programming tool.
- Connection of the racks in a controller, see Chapter 3.

5.4 Communication Redundancy

For more information, refer to the SILworX online help and communication manual (HI 801 101 E).

5.4.1 safe**ethernet**

Redundancy is configured in the SILworX safe**ethernet** Editor. A communication connection is redundant if two identical physical transmission paths exist.

5.4.2 Standard Protocols

If standard protocols are used, the user program must manage redundancy, except for Modbus slaves.

6 Programming

SILworX is installed on a personal computer (PC) and activated through a license. To create the user program and configure a resource, SILworX does not have to be connected to the HIQuad system. To perform loading, testing and monitoring tasks, the PC is connected to the HIQuad X system via an Ethernet interface.

6.1 Using Variables in a Project

A variable is a placeholder for a value within the program logic. The variable name is used to symbolically address the storage space containing the stored value.

Two essential advantages result from using symbolic names instead of physical addresses:

- The names of inputs and outputs used in the process can also be used in the user program.
- The modification of how the variables are assigned to the input and output channels does not affect the user program.

Local and global variables exist. Local variables are valid in a delimited project area, in a user program or function block. Global variables can be used in several function blocks or user programs and can exchange data between the function blocks.

Global variables can be created at different project tree levels. Global variables are valid for all sub-branches.

Example: If a project contains several resources, the global variables created under a resource are only valid for the branches subordinated to that resource.

Hierarchy of the levels at which global variables can be defined.

1. Project.
2. Configuration.
3. Resource.

Values may only be written to global data in one program location! The possible sources are:

- Logic in a user program.
- (Safety-related) inputs.
- System variables.
- (Safety-related) communication protocols.

Writing to global variables at multiple positions within the program can result in unintended effects!

In the Global Variable Editor, check the usage of global data with the *Cross-Reference in Column* function.

6.1.1 Variable Types

SILworX supports the following variable types:

- VAR, a variable within a logic (read and write).
- VAR with the CONST attribute, a variable that was defined as constant and cannot be modified.
- VAR with the RETAIN attribute, a variable that retains its value after a power outage.
- VAR_EXTERNAL, reference to global variables (read and write).
- VAR_GLOBAL, global variable (read and write) to exchange values between programs and subordinated functions and function blocks.
- VAR_INPUT, input variable (read) of a POU. It is also displayed in the interface viewer.
- VAR_OUTPUT, output variable (write) of a POU. It is also displayed in the interface viewer.
- VAR_TEMP, temporary variable (read and write).
- VAR_ACTION, action declaration (read and write).

Which type can be assigned to a variable depends on the hierarchy of the variables in the structure tree. The following table shows the permissible variable types in connection with the structure tree nodes.

Type	Project	Configuration	Resource	Program type	Function block type	Function type
VAR				X		
VAR_EXTERNAL				X		
VAR_GLOBAL	X	X	X	(1)		
VAR_INPUT				(1)	X	X
VAR_OUTPUT				(1)	X	X
VAR_TEMP				(2)	X	
VAR_ACTION				(2)	X	
(1) Contrary to the standard, this function is not supported. (2) Contrary to the standard, VAR_ACTION is supported.						

Table 22: Supported Variable Types

6.1.2 Initial Value

An initial value can be allocated to any variable. The variable adopts this value if no other value was assigned by the program:

- While starting the program
- If a fault occurs in one of the following sources from which the variable derived its value. Examples:
  - Physical input.
  - Communication interface.
  - User program in the STOP state.

  The value that the connected variables should adopt can be set for safe**ethernet** and communication protocols.

---

i HIMA recommends assigning a safe value as initial value to all the variables that receive their value from a physical input or from communication!

Variables that have not been assigned an initial value have an initial value of 0 or FALSE if the variables are of type BOOL.

6.1.3 System Variables and System Parameters

System variables are pre-defined variables for processing properties or states of the HIQuad X system in the user program. To define them, they are assigned global variables used in the user program.

The system parameters are used to configure properties of the controller (only possible in SILworX). System parameters that can only have the values TRUE and FALSE are also referred to as switches.

System variables and system parameters are defined at different project levels. The system variables and parameters are configured in SILworX, either in the Properties dialog box of the corresponding structure tree node or in the detail view of the Hardware Editor.

Project level	Description of the system variables and parameters
Resource	See Table 24.
Hardware, in general	▪ System variables for configuring the controller, see Table 24. ▪ System variables providing information, see Table 26 and Table 27.
Hardware: Modules	Refer to the manual of the corresponding module type. The system variables and system parameters are configured in the module's detail view of the Hardware Editor.
User Program	See Table 25.

Table 23: System Variables at Different Project Levels

6.1.3.1 Resource System Parameters

The system parameters of the resource determine how the controller will behave during operation. The system parameters can be set in SILworX, in the *Properties* dialog box of the resource.

System parameters	S [1)]	Description	Setting for safe operation
Name	N	Name of the resource.	Any
System ID [SRS]	Y	System ID of the resource Range of values: 1…65 535 Default value: 60 000 The value assigned to the system ID must differ from the default value, otherwise the project is not able to run!	Unique value within the controller network. This network includes all controllers that can potentially be interconnected.
Safety Time [ms]	Y	For details on the safety time of the resource (in milliseconds). Range of values: 20…22 500 ms Default value: 600 ms (can be changed online)	Application-specific
Watchdog Time [ms]	Y	Watchdog time in milliseconds. Range of values: 6…7500 ms Default value: 200 ms (can be changed online)	Application-specific
Target Cycle Time [ms] CPU-Periode	N	Target or maximum cycle time, see Target Cycle Time Mode. Range of values: 0…7500 ms Default value: 0 ms (can be changed online) The maximum target cycle time value may not exceed the configured Watchdog Time [ms] minus the minimum value that can be set for Watchdog Time [ms] (6 ms, see above); otherwise the entry is rejected. If the default value is set to 0 ms, the target cycle time is not taken into account. For more details, refer to Chapter 6.1.3.2.	Application-specific
Target Cycle Time Mode	N	Use of Target Cycle Time [ms], see Chapter 6.1.3.2. The default setting is Fixed-tolerant (can only be changed online).	Application-specific
Multitasking Mode	N	Mode 1: The duration of a CPU cycle is based on the required execution time for all user programs. Mode 2: The processor provides the execution time portion not needed by lower priority user programs to higher priority user programs. Operation mode for high availability. Mode 3: The processor waits until the execution time not needed by the user programs has expired, thus increasing the cycle. The default setting is Mode 1.	Application-specific
Max. Com.Time Slice [ms]	N	Highest value in ms for the time slice used for communication during a resource cycle, see the communication manual (HI 801 101 E). Range of values: 2…5000 ms Default value: 60 ms	-

System parameters	S [1)]	Description		Setting for safe operation
Optimized Use of Com. Time Slice	N	The system parameter reduces the response times for communications via processor module(s). i This can affect the temporal utilization of Max.Com. Time Slice ASYNC [ms] and the system parameter Max. Duration of Configuration Connections [ms] such that these two times can be subject to more demands (e.g., during reload).		-
Max. Duration of Configuration Connections [ms]	N	This defines how much time within a CPU cycle is available for configuration connections. Range of values: 2…3500 ms Default value: 12 ms For more details, refer to Chapter 6.1.3.4.		Application-specific
Maximum System Bus Latency [µs]	N	Maximum delay of a message between an I/O processing module and the processor module. Setting: Line structure or 100 µs The default setting is line structure. i A license is required for setting the maximum system bus latency to a value ≠ System Defaults.		Application-specific
Allow Online Settings	Y	TRUE:	All the switches/parameters listed under FALSE can be changed online using the PADT. This is only valid if the system variable Read-only in RUN has the value FALSE. The default setting is TRUE.	HIMA recommends using the FALSE setting.
		FALSE:	The following parameters cannot be changed online: ▪ System ID ▪ Autostart ▪ Global Forcing Allowed ▪ Global Force Timeout Reaction ▪ Load Allowed ▪ Reload Allowed ▪ Start Allowed The following parameters can be changed online if Reload Allowed is TRUE. ▪ Watchdog Time (for the resource) ▪ Safety Time ▪ Target Cycle Time ▪ Target Cycle Time Mode	
		Allow Online Settings can only be TRUE when the controller is stopped or by performing a reload.		
Autostart	Y	TRUE:	If the processor module is connected to the supply voltage, the user programs start automatically. The default setting is TRUE.	Application-specific
		FALSE:	The user program does not start automatically after connecting the supply voltage.	
		Observe the settings in the resource program properties!		

System parameters	S [1]	Description		Setting for safe operation
Start Allowed	Y	TRUE:	Cold start or warm start permitted with the PADT in RUN or STOP. The default setting is TRUE.	Application-specific
		FALSE:	Start not allowed.	
Load Allowed	Y	TRUE:	Configuration download is allowed. The default setting is TRUE.	Application-specific
		FALSE:	Configuration download is not allowed.	
Reload Allowed	Y	TRUE:	Configuration reload is allowed. The default setting is TRUE.	Application-specific
		FALSE.	Configuration reload is not allowed. A running reload process is not aborted when switching to FALSE.	
Global Forcing Allowed	Y	TRUE:	Global forcing is permitted for this resource. The default setting is TRUE.	Application-specific
		FALSE:	Global forcing is not permitted for this resource.	
Global Force Timeout Reaction	N	Specifies how the resource should behave when the global force timeout has expired: ▪ Stop Forcing Only. ▪ Stop Forcing and Stop Resource. Default value: Stop Forcing Only.		Application-specific
Minimum Configuration Version	N	The default setting is based on the current SILworX version. It ensures compatibility with future SILworX versions. Code is generated in accordance with SILworX V10 conventions, since HIQuad X is supported as of SILworX V10. Any setting to a SILworX version prior to V10 is rejected for HIQuad X. An error message is displayed in the logbook! For more details, refer to Chapter 6.1.3.5.		Application-specific
Fast Start-Up	N	Not applicable to HIQuad X.		-
[1] The operating system handles the system parameter in a safety-related manner, yes (Y) or no (N)				

Table 24: Resource System Parameters

6.1.3.2 Use of the Parameters *Target Cycle Time* and *Target Cycle Time Mode*

Using the settings for the *Target Cycle Time Mode* system parameter, the cycle time can be maintained as constant as possible at the value of *Target Cycle Time [ms]*. To do this, the system parameter must be set to a value > 0.

In doing so, HIQuad X limits reload and synchronization on the redundant modules to ensure that the target cycle time is maintained.

The following table describes the settings for the *Target Cycle Time Mode* system parameter.

Setting	Description
Fixed	If a CPU cycle is shorter than the defined Target Cycle Time, the CPU cycle is extended to the target cycle time. If the CPU cycle takes longer than the target cycle time, the CPU resumes the cycle without delay. i A reload or synchronization process is rejected if the reserve time is not sufficient (target cycle time minus actual cycle time).
Fixed-tolerant	Similar to Fixed, but with the following differences: 1. To ensure that the synchronization process can be performed successfully, the target cycle time may be violated for one CPU cycle. 2. To ensure that the reload can be performed successfully, the target cycle time may be violated for 1 to n CPU cycles (where n is the number of changed user programs). The default setting is Fixed-tolerant! i After the first reload activation cycle, the values of watchdog time, target cycle time and target cycle time mode apply in accordance with the new configuration. A maximum of every fifth cycle can be extended during the reload. One single cycle may be extended during synchronization.
Dynamic	The CPU processes each CPU cycle as fast as possible. This corresponds to a target cycle time of 0 ms. i A reload or synchronization process is rejected if the reserve time is not sufficient (target cycle time minus actual cycle time). A maximum of every fifth cycle can be extended during the reload. One single cycle may be extended during synchronization.
Dynamic-tolerant	Similar to Dynamic, but with the following differences: 1. If necessary, the target cycle time is automatically increased for one CPU cycle to ensure that the synchronization process can be performed successfully. 2. To ensure that the reload can be performed successfully, the target cycle time may be automatically increased for 1 to n CPU cycles (where n is the number of changed user programs). i After the first reload activation cycle, the values of watchdog time, target cycle time and target cycle time mode apply in accordance with the new configuration. A reload or synchronization process is rejected if the reserve time is not sufficient (target cycle time minus actual cycle time).

Table 25: Settings for Target Cycle Time Mode

6.1.3.3 Maximum Communication Time Slice

The maximum communication time slice is the time period in milliseconds (ms) per CPU cycle assigned to the processor module for processing the communication tasks. Even if the protocol processing could not be completed within one communication time slice, the CPU still executes the safety-relevant monitoring for all protocols within one CPU cycle.

i If not all upcoming communication tasks can be processed within one CPU cycle, the whole communication data is transferred over multiple CPU cycles. The number of communication time slices is then greater than 1.

For calculating the maximum response time, the number of communication time slices must be equal to 1.

Determining the Maximum Duration of the Communication Time Slice

For a first estimate of the maximum duration of the communication time slice for the HIQuad X system, the sum of the following times must be entered in the *Max. Com. Time Slice [ms]* system parameter located in the properties of the resource:

- For each F-COM module: 3 ms.
- For each redundant safe**ethernet** connection: 1 ms.
- For each non-redundant safe**ethernet** connection: 0.5 ms.
- For each kilobyte user data of non-safety-related protocols, e.g., Modbus: 1 ms.

HIMA recommends comparing the value estimated for *Max. Com. Time Slice [ms]* with the value displayed in the Control Panel and, if necessary, correcting it in the properties of the resource. This can be done during an FAT (factory acceptance test) or SAT (site acceptance test).

To determine the actual duration of the maximum communication time slice

1. Operate the HIQuad X system under full load (FAT, SAT):
   All communication protocols are in operation (safe**ethernet** and standard protocols).
2. Open the **Control Panel** and select the **Com. Time Slice** structure tree folder.
3. Read the vale displayed for *Maximum Com. Time Slice Duration per Cycle [ms].*
4. Read the value displayed for *Maximum Number of Required Com. Time Slice Cycles*.

The duration of the communication time slice must be set so that, when using the communication time slice, the CPU cycle cannot exceed the watchdog time specified by the process.

6.1.3.4 Calculating the *Maximum Duration of Configuration Connections [ms]*

If communication is not completely processed within a CPU cycle, it is resumed in the next following CPU cycle at the interruption point. This slows down communication, but it also ensures that all connections to external partners are processed equally and completely.

The value of *Max. Duration of Configuration Connections [ms]* is included in the watchdog time and must be selected so that the cyclic processor module tasks can be executed in the remaining time.

The volume of the configuration data to be communicated must be observed. This depends on the number of configured remote I/Os, the existing connections to PADTs and the system modules with an Ethernet interface.

A temporary setting for the F-CPU 01 module can be calculated as follows:

$t_{Config} = n_{Com} + n_{PADT} + n_{RIO} * 0.25\ ms + 4\ ms + 4*(t_{Latency} * 2 + 0.8)$

t_{Config}	System parameter *Max. Duration of Configuration Connections [ms]*
n_{COM}	Number of modules with Ethernet interfaces (CPU, COM)
n_{RIO}	Number of configured remote I/Os
n_{PADT}	Maximum number of PADT connections = 5
$t_{Latency}$	To obtain the value in ms, divide the *Maximum System Bus Latency [µs]* by 1000.

If $\mathbf{t}_{Config}$ is less than 6 ms, the value must be set to 6 ms.

The calculated value $\mathbf{t}_{Config}$ must be compared with the real value derived from the online statistics of the Control Panel. The real value depends on the system structure.

If the value calculated for $\mathbf{t}_{Config}$ is greater than the real value, the remaining time will not be used for other cyclic tasks, such as the adoption of an additional CPU for redundancy operation. The remaining time is not included in the cyclic reserve time.

i If the real value is greater than the value calculated for $\mathbf{t}_{Config}$, the parameter located in the resource properties must be corrected (observe the watchdog time) and loaded into the controller by performing a download or reload. Alternatively, a direct online change is also possible. Not correcting the value causes the system handling via PADT to slow down.

6.1.3.5 The *Minimum Configuration Version* Parameter

- The highest *Minimum Configuration Version* is always selected for new projects. Verify that this setting is in accordance with the operating system version in use.
- In a previous project converted to the current SILworX version, the value for *Minimum Configuration Version* remains the value set in the previous version. This ensures that the configuration CRC resulting from the code generation is the same as in the previous version and the configuration is still compatible with the operating systems of the modules.

  The value of *Minimum Code Generation* only needs to be increased for converted projects if additional functions of a controller should be used.
- If features requiring a higher configuration version are used in the project, SILworX automatically generates a configuration version higher than the preset *Minimum Configuration Version*. This is indicated by SILworX in the code generation logbook. The modules reject loading configurations if their version and operating system do not match.

  The safety-related SILworX version comparison can be used to determine and prove changes performed to the current project version compared to a previous one.
- For HIQuad X, *Minimum Configuration Version* must be set to *SILworX V10* or higher.

6.1.3.6 Rack System Variables

These system variables are used to change the behavior of the controller while it is operating in specific states. The system parameter can be accessed by double-clicking the gray background of the rack or selecting the *Detail View* context menu and opening the *System* tab in the Hardware Editor.

Output Variables

Variables that are not selected in the *Input Variables* column through a tick, are output variables.

System variables	S [1)]	Function	Setting for safe operation
Force Deactivation	Y	Prevents the forcing process from starting and terminates a running forcing process. The default setting is FALSE.	Application-specific
Emergency Stop 1…Emergency Stop 4	Y	Shuts down the controller if faults are detected by the user program. The default setting is FALSE.	Application-specific
Read-Only in RUN	Y	After the controller is started, the access permissions are downgraded to Read-Only. Exceptions are forcing and reload. The default setting is FALSE.	Application-specific
Reload Deactivation	Y	Locks the execution of reload. The default setting is FALSE.	Application-specific
[1)] The operating system handles the system parameter in a safety-related manner, yes (Y) or no (N).			

Table 26: System Parameters for Output Variables

Input Variables

Variables that are not selected in the *Input Variables* column through a tick, are output variables.

System variables	S [1)]	Description	Data type
Number of Field Errors	N	Number of current field faults.	UDINT
Number of Field Errors - Historic Count	N	Counted number of field faults (counter resettable)	UDINT
Number of Field Warnings	N	Number of current field warnings.	UDINT
Number of Field Warnings - Historic Count	N	Counted number of field warnings (counter resettable)	UDINT
Number of Communication Errors	N	Number of current communication errors	UDINT
Number of Communication Errors - Historic Count	N	Counted number of communication errors (counter resettable)	UDINT
Number of Communication Warnings	N	Number of current communication warnings	UDINT
Number of Communication Warnings - Historic Count	N	Counted number of communication warnings (counter resettable)	UDINT
Number of System Faults	N	Number of current system errors	UDINT
Number of System Faults - Historic Count	N	Counted number of system errors (counter resettable)	UDINT
Number of System Warnings	N	Number of current system warnings	UDINT
Number of System Warnings - Historic Count	N	Counted number of system warnings (counter resettable)	UDINT

System variables	S [1)]	Description	Data type
Autostart	Y	TRUE: When the processor module is connected to the supply voltage, it automatically starts the user program. FALSE: When the supply voltage is connected, the processor module enters the STOP state.	BOOL
OS Major [1]…[2] OS Minor [1]…[2]	Y	Version of the operating system for every processor module. The number of redundant processor modules and the values depend on the controller type.	UINT
CRC	Y	Resource configuration checksum.	UDINT
Date/time [ms portion] Date/time [sec. portion]	N	System date and system time in milliseconds and seconds since 1970-01-01: 0…999 ms, 0…4 294 967 295 s	UDINT
Force Deactivation	Y	TRUE: Forcing is deactivated. FALSE: Forcing is possible.	BOOL
Forcing Active	Y	TRUE: Global or local forcing is active. FALSE: Global and local forcing are not active.	BOOL
Force Switch State	N	Information about the selected force switch. 0xFFFF FFFE: No force switch set. 0xFFFF FFFF: At least one force switch set.	UDINT
Global Forcing Started	Y	TRUE: Global forcing is active. FALSE: Global forcing is not active.	BOOL
Last Field Warning [ms] Last Field Warning [s]	N	Date and time of the last field warning in milliseconds and seconds since 1970-01-01: 0…999 ms, 0…4 294 967 295 s	UDINT
Last Communication Warning [ms] Last Communication Warning [s]	N	Date and time of the last communication warning in milliseconds and seconds since 1970-01-01: 0…999 ms, 0…4 294 967 295 s	UDINT
Last System Warning [ms] Last System Warning [s]	N	Date and time of the last system warning in milliseconds and seconds since 1970-01-01: 0…999 ms, 0…4 294 967 295 s	UDINT
Last Field Error [ms] Last Field Error [s]	N	Date and time of the last field error in milliseconds and seconds since 1970-01-01: 0…999 ms, 0…4 294 967 295 s	UDINT
Last Communication Error [ms] Last Communication Error [s]	N	Date and time of the last communication error in milliseconds and seconds since 1970-01-01 0…999 ms, 0…4 294 967 295 s	UDINT
Last System Error [ms] Last System Error [s]	N	Date and time of the last system error in milliseconds and seconds since 1970-01-01: 0…999 ms, 0…4 294 967 295 s	UDINT
Fan State	N	Depends on the controller type; see the documentation. 0xFF: Not available.	BYTE
Mono Startup Release	Y	Enable for non-redundant operation. The system variable exists depending on the controller family. TRUE: A single processor module in rack 0, slot 10/12 (H51X) may also start with one system bus only. A single processor module in rack 0, slot 16/18 (H41X) may also start with one system bus only. FALSE: Both system buses are also necessary for a single processor module.	BOOL

System variables	S [1)]	Description	Data type
Power Supply Input Voltage 1…5[D20_0004, #580]	N	Value of the input voltage in the respective F-PWR 01 power supply unit expressed in mV.	UINT
Power Supply Status[D20_0004, #579]	N	Status of the F-PWR 01 power supply units. 3 adjacent bits are coded for each power supply unit. Bit 0…2: Status of power supply unit 1 Bit 3…5: Status of power supply unit 2 Bit 6…8: Status of power supply unit 3 Bit 9…11: Status of power supply unit 4 Bit 12…14: Status of power supply unit 5 The following applies to each power supply unit: ▪ Once the power supply unit has been detected, the least significant bit is 1. Otherwise, it is bit 0. ▪ If at least one warning was issued for the power supply unit, the middle bit is 1. Otherwise, it is bit 0. ▪ If at least on fault occurred in the power supply unit, the most significant bit is 1. Otherwise, it is bit 0.	WORD
Allow Online Settings	Y	Main enable switch of the processor module TRUE: The subordinate enable switches may be changed. FALSE: The subordinate enable switches may not be changed.	BOOL
Read-Only in RUN	Y	TRUE: The following operator functions are locked: Stop, Start, Download. FALSE: The following operator functions are unlocked: Stop, Start, Download.	BOOL
Redundancy Info	Y	Bit-coded redundancy state of the processor modules. The variable exists depending on the controller family.	
Reload Allowed	Y	TRUE: Reload is allowed to load a controller. FALSE: Reload is not allowed to load a controller.	BOOL
Reload Deactivation	Y	TRUE: Reload is locked. FALSE: Reload is not locked.	BOOL
Reload Cycle	Y	TRUE: The current cycle is the first cycle after a reload. FALSE: Otherwise	BOOL
Responsible Module Essential	Y	Essential state of redundant processor modules. The variable exists depending on the controller family.	BYTE
Safety Time [ms]	Y	Safety time set for the resource in ms.	UDINT
Start Allowed	Y	TRUE: The processor module may be started through the PADT. FALSE: The processor module may not be started through the PADT.	BOOL
Start Cycle	Y	TRUE: The current cycle is the first cycle after the start. FALSE: Otherwise	BOOL
Power Supply State [1]…[2]	N	Bit-coded state of the power supply of processor modules 1…2. The following properties differ depending on the controller family: - Possible number of processor modules. - State bits suitable for safety functions!	BYTE
System ID [SRS]	Y	System ID of the controller, 1…65 535.	UINT

System variables	S [1]	Description	Data type
Systemtick HIGH Systemtick LOW	Y	Revolving millisecond counter (64-bit).	UDINT
Temperature State [1]…[2]	N	Bit-coded temperature state of processor modules 1…2: Bit no. / State when the bit is set. 0 / Temperature threshold 1 exceeded. 1 / Temperature threshold 2 exceeded. 2 / Incorrect temperature value.	BYTE
Remaining Global Force Duration [ms]	Y	Time in ms until the time limit set for global forcing expires.	DINT
Watchdog Time [ms]	Y	Maximum permissible duration of a RUN cycle in ms (dependent on the controller family).	UDINT
Cycle Time, last [ms]	Y	Current cycle time.	UDINT
Cycle Time, max [ms]	N	Maximum cycle time in milliseconds.	UDINT
Cycle Time, min [ms]	N	Minimum cycle time in milliseconds.	UDINT
Cycle Time, average [ms]	N	Average cycle time in milliseconds.	UDINT

[1] The operating system handles the system parameter in a safety-related manner, yes (Y) or no (N).

Table 27: System Parameter for Input Variables

6.1.3.7 Locking and Unlocking the Resource

Locking the resource locks all functions and prevents users from accessing them during operation. This also protects against unauthorized manipulations to the user program.

Unlocking the controller deactivates any locks previously set, e.g., to perform work on the controller.

The three system variables *Read-only in Run*, *Reload Deactivation* and *Force Deactivation* are used to lock the PES, see Table 26.

If all three system variables are TRUE, no access to the controller is possible. In this case, the controller can only enter the STOP state by restarting all processor modules. Only then can a new user program be loaded. The example describes a simple case, in which a key-operated switch is used to lock or unlock all interventions to the resource.

Example: To make a controller lockable

1. Define a global variable of type BOOL and set its initial value to FALSE.
2. Assign the global variable as output variable to the three system variables *Read-only in Run*, *Reload Deactivation* and *Force Deactivation*.
3. Assign the global variable to the channel value of a digital input.
4. Connect a key switch to the digital input.
5. Compile the program, load it into the controller, and start it.

► The owner of a corresponding key-operated switch is able to lock and unlock the controller. If the corresponding digital input module fails, the controller is automatically unlocked.

This simple example can be modified using multiple global variables, digital inputs and key switches. The permissions for forcing, reload and other operating functions can be distributed on different keys and persons.

6.2 Forcing

Forcing is the procedure by which a variable's current value is replaced with a force value.

The current value of a variable is assigned from one of the following sources:

- A physical input.
- Communication.
- A logic operation.

When a variable is being forced, its value is defined by the user.

Forcing can be used in the following cases:

- For testing the user program; in particular, in cases or conditions that cannot otherwise be tested.
- For simulating unavailable sensors when the initial values are not appropriate.

⚠ WARNING

Physical injury due to forced values is possible!

- **Only force values after receiving consent from the test authority responsible for the acceptance test.**
- **Only remove existing forcing restrictions with the consent of the test authority responsible for the acceptance test.**

When forcing values, the person in charge must take further technical and organizational measures to ensure that the process is sufficiently monitored in terms of safety. HIMA recommends setting a time limit for the forcing procedure, refer to Chapter 6.2.1 for details.

⚠ WARNING

Failure of safety-related operation possible due to forced values!

- **Forced value may lead to incorrect output values.**
- **Forcing prolongs the cycle time. This can cause the watchdog time to be exceeded.**

Forcing is only permitted after receiving consent from the test authority responsible for the acceptance test.

Forcing can operate at two levels:

- Global forcing: Global variables are forced for all applications.
- Local forcing: Values of local variables are forced for an individual user program.

6.2.1 Time Limits

Different time limits can be set for global or local forcing. Once the defined time has expired, the controller stops forcing values.

The behavior of the HIQuad X system upon expiration of the time limit can be configured:

- For global forcing, the following settings can be selected:
  - *Stop Resource.*
  - *Stop Forcing Only,* i.e., the resource continues to operate.
- For local forcing, the following settings can be selected:
  - *Stop Program.*
  - *Stop Forcing Only,* i.e., the user program continues to run.

Forcing can also be used without time limit. In this case, the forcing procedure must be stopped manually.

The person responsible for forcing must clarify what effects stopping forcing have on the entire system!

6.2.2 Restricting the Use of Forcing

The user can limit the use of forcing to avoid faulty safety-related operation due to its improper use. The following measures can be implemented in the configuration:

- Configuring different user profiles with or without forcing authorization.
- Prohibit global forcing for a resource.
- Prohibit local forcing for a user program
- Forcing can also be stopped immediately using a key switch.
  To do so, the *Force Deactivation* system variable must be linked to a digital input connected to a key switch.

⚠ WARNING

Failure of safety-related operation possible due to forced values!

Only remove existing forcing restrictions with the consent of the test authority responsible for the acceptance test.

6.2.3 Force Editor

SILworX Force Editor lists all the variables, grouped in global and local variables.

For each variable, the following can be set:

- The force value
- The force switch (switching it on or off) to prepare for forcing variables.

Forcing can be started and stopped for both local and global variables.

Forcing can be started for a predefined time limit or for an indefinite time period. If none of the restrictions apply, all variables with an active force switch are set to their force values.

When forcing is stopped, manually or because the time limit has expired, the variables will again receive their values from the process or the user program.

If forcing is started again, the configured force values will replace the values from the program or process!

For more information on the Force Editor and forcing, refer to the SILworX online help.

Copying data from the Force Editor to the clipboard gathers the current state of the data available in the Force Editor. Data that are not visible are not refreshed and can thus have an

obsolete value! Press `Ctrl+A` to select and copy all the data, even if they are not in the visible area.

6.2.4 Automatic Forcing Reset

The operating system resets forcing in the following cases:

- When the resource is restarted, e.g., after connecting the supply voltage.
- When the resource is stopped.
- When a new configuration is loaded by performing a download.
- When a user program is stopped: Reset of local forcing for this user program.

In these cases, the user program changes the force settings as follows:

- Force values to 0 or FALSE
- Individual force switch to OFF.

During a reload, local and global force values as well as forcing times and force timeout reactions are still valid.

Global force values and force switches can be set when a resource is stopped. The configured values become valid after restarting the resource and forcing.

Local force values and force switches can be set when the user program is stopped. The configured values become valid after restarting the user program and forcing.

6.2.5 Forcing and Scalar Events

When forcing a global variable used to create scalar events, observe the following points:

- The events are created in accordance with the force value.
- The values of these variable-dependent status variables are not tracked to the force value!

In such cases, the corresponding status variables must also be forced!

6.3 Cycle Sequence

In a simplified overview, the processor module cycle (CPU cycle) of only one user program runs through the following phases:

1. Processing of the input data.
2. Processing of the user program.
3. Provision of the output data.

These phases do not include special tasks such as reload, which might be executed within a CPU cycle.

Global variables, results from function blocks, and other data are processed in the first phase and represent the input data for the second phase. The first phase need not start at the beginning of the cycle, but may be delayed. For this reason, inaccurate cycle times, potentially exceeding the watchdog time, may result if timer function blocks are used to determine the cycle time in the user program.

In the third phase, the user program results are forwarded for being processed in the following cycles and supplied to the output channels.

6.4 User Management

The user management allows users to organize user groups, user accounts and their access permissions for each individual project. The user management in SILworX is set up for each project and each controller:

- The PADT user management controls the access to the SILworX project.
- The PES user management controls the access to the PES.

HIMA recommends using the user management for protecting SILworX projects and controllers (PES) against unauthorized access and cyberattacks. Refer to the HIMA automation security manual (HI 801 373 E) for more details.

6.4.1 PADT User Management

The PADT user management is used to create user groups and user accounts. The user management and access permissions apply to one SILworX project.

If no PADT user management exists, any user can open and modify the project. If the PADT user management has been defined for a project, only authenticated users can open the project. If a PADT user account was defined in a project as the default user account, every user can open the project with the default user account. Only users with the corresponding rights may modify the projects. The table shows the possible access modes (permission levels).

Access Mode	Description
Security Administrator	Security administrators may modify the user management, i.e., set up, delete, change user accounts, user groups and the user management, and define the default user account. They may also perform all SILworX functions.
Read and Write	Allows users to perform SILworX functions, except for the user management.
Read	Read-only access, i.e., users may not change or archive the projects.

Table 28: Access Modes for the PADT User Management

The PADT user management allocates the permissions to the user groups. A user may only be member in one user group. The user accounts obtain their permissions through the user group assigned to them. At least one user group with configured user must have the access mode **Security Administrator**.

Properties of user groups:

- The name must be unique within the project and may contain 1…31 characters from the ISO Latin 1 character set. Leading white-spaces are ignored.
- An access mode is assigned to a user group.
- Any number of user accounts may be assigned to a user group.
- A project may contain any number of user groups.

Properties of user accounts:

- The name must be unique within the project and may contain 1…31 characters from the ISO Latin 1 character set. Leading and trailing white-spaces are ignored.
- A user account is assigned to a user group.
- A project may contain any number of user accounts.
- A user account can be the default user account of the project.

No additional authentication is required if the project is opened with a default user account. The default user account is defined in the **Properties** of the user management. Note: Close the user management editor prior to opening the **Properties** dialog box.

6.4.2 PES User Management

The PES user management serves to protect a HIMA controller against unauthorized access and actions. The user groups and their access permissions are part of the project, they are defined with SILworX and loaded into the PES.

The PES user management automatically displays the user groups created in the PADT user management. The user groups in the PES user management can be directly allocated to the corresponding resources.

User accounts for up to ten user groups can be managed in the PES user management of each controller. The user data is available for login once the project has been loaded in the controller through a download. The user accounts are stored in the controller and still apply after switching off the operating voltage. The user accounts of a controller also apply to the connected remote I/Os.

Users log in to a controller using the user group name and password. If they use the user group name belonging to their user account, the password is not required for login. The values for PES user group name and password are not those currently entered in the project, but those transferred to the PES during the last loading process!

The use of the PES user management is not necessary, but is a contribution to safe and secure operation. If PES user accounts are defined for a resource, at least one must have administrator rights.

6.4.3 Default User

The factory user settings apply if no user accounts were set up for a resource. The factory settings also apply after starting a controller using the mode switch set to *Init*.

Factory settings

Number of users:	1
User group:	Administrator
Password:	None
Access permission:	Administrator

i Note that the default settings cannot be maintained if new user accounts are defined.

Parameters for PES User Accounts

When editing PES user accounts, the following parameters can be defined:

Parameters	Description
PES	PES name (resource); automatically filled in!
User Group	User group name used to log in to a controller; automatically filled in!
PADT Security Administrator Password	Field for entering the PADT security administrator password.
Access Mode	The access modes define the rights allocated to users. The following access modes are possible: ▪ Read: Users may only read information but they cannot modify the controller. ▪ Read + Operator: Similar to Read, but users may also: - Start, stop and test user programs. - Configure the redundancy for processor modules. - Reset cycle time and fault statistics. - Set the system time, restart and reset the modules. - Start system operation for processor modules. - Forcing ▪ Read + Write: Similar to Read + Operator, but users may also: - Load the programs into the controller (by performing a download or reload). - Perform forcing. - Change system parameters, such as watchdog time, online. ▪ Administrator: Similar to Read + Write, but users may also: - Load operating systems. At least one user must have administrator rights, otherwise the controller settings are not accepted.
PES Password	Password assigned to the PES user group and required for login. The password must not contain more than 32 characters and may only be composed of letters (A…Z, a…z), numbers (0…9) and the special characters underscore «_» and hyphen «-». The entry is case sensitive.
Confirm PES Password	Repeat the password to confirm the entry.

Table 29: Parameters for User Groups in the PES User Management

6.4.4 Setting up PES User Accounts

A PADT user account with *Security Administrator* access mode has access to all the PES user groups.

Take the following points into account when setting up PES user groups:

- Make sure that at least one PES user account with *Administrator* access mode is configured in every PES. Usually, this is the Security Administrator user group. Always define a password for the PES user account with *Administrator* access mode.

i Generally, passwords are to be used. Suitable passwords are composed of more than 10 characters and contain numbers, special characters, capital and lowercase letters. For more information, refer to the HIMA automation security manual (HI 801 373 E).

- In SILworX, use *Verification* to check the created PES user groups.
- The new PES user groups are valid once the code has been generated and a download has been performed to load the project into the controller. All PES user groups previously saved, e.g., the default settings, are no longer valid.

7 Diagnostics

The diagnostic LEDs are used to give a first quick overview of the system state.
The diagnostic history in SILworX provides detailed information.

7.1 Light Emitting Diodes

Light emitting diodes (LEDs) on the front plate indicate the module state. All LEDs should be considered together. The state of one single LED is not sufficient to assess the module state.

A description of the LEDs is provided in the module-specific manuals.

After connecting the supply voltage, an LED test is performed and all the LEDs are lit for at least 2 s. The color of two-color LEDs changes once during the test.

Definition of blinking frequencies

The following table defines the blinking frequencies:

Definition	Blinking frequencies
Blinking1	Long (600 ms) on, long (600 ms) off.
Blinking2	Short (200 ms) on, short (200 ms) off, short (200 ms) on, long (600 ms) off.
Blinking-x	Ethernet communication: Blinking synchronously with data transmission.

Table 30: Blinking Frequencies of the LEDs

Some LEDs can report warnings (On) and faults or errors (Blinking1), see the following tables. The indication of errors or faults has priority over the indication of warnings. Warnings cannot be reported if errors or faults are being signaled.

7.2 Diagnostic History

The modules F-CPU, F-IOP and F-COM keep a history of the faults and other events that have occurred. The events are stored in the history in chronological order. The history is organized as a ring buffer.

The diagnostic history is composed of short-term and long-term diagnostics.

- Short-term diagnostics

  If the maximum number of entries has been reached, each new entry deletes the oldest entry.
- Long term dignostics:

  The long term diagnosis essentially stores actions and configuration changes performed by the user.
  If the maximum number of entries has been reached, each new entry deletes the oldest entry if this is older than three days.
  The new entry is rejected if the existing entries are not older than three days. The rejection is marked by a special entry.

The number of events that can be stored depends on the type of module.

Module type	Max. number of events long term diagnosis	Max. number of events short-term diagnostics
F-CPU 01	2500	1500
F-IOP 01	400	500
F-COM 01	300	700

Table 31: Maximum Number of Entries Stored in the Diagnostic History per Module Type

i The diagnostic entries can be lost if a power outage occurs just before they could be saved into non-volatile memory.

SILworX can be used to read the histories of the individual modules and represent them so that the information required to analyze a problem is available:

Example:

- Mixing the histories from various sources
- Filtering by time period.
- Printing out the edited history
- Saving the edited history

For additional functions, see the SILworX online help.

7.2.1 Diagnostic Messages

A diagnostic message for I/O modules is structured as follows:

IO ERROR >> slot `S` I/O module type: `MMMM` status[Mod: `mm` OUT: `AAAA` IN: `EEEE`] channel[OUT:`aaaa` IN:`eeee`] <<

The following table describes the data fields in the message.

Data field	Format	Description
`S`	Decimal	Slot number of the I/O module
`MMMM`	Hexadecimal	Module type
`mm`	Hexadecimal	Status of the module
`AAAA`	Hexadecimal	Code for faults in the module's outputs
`EEEE`	Hexadecimal	Code for faults in the module's inputs
`aaaa`	Hexadecimal	Code for channel faults in the output channels
`eeee`	Hexadecimal	Code for channel faults in the input channels

Table 32: Data Field of Diagnostic Message

For further details on the error codes, refer to the corresponding manuals. If multiple channels are faulty, the data field `aaaa / eeee` contains an OR gate with 0x8000, e.g., the most significant bit is set to 1 in addition to the error code.

The module type can be determined in the Hardware Editor.

7.3 Online Diagnosis

The online view in the SILworX Hardware Editor is used to diagnose failures in the HIQuad X modules. Failed modules are signalized by a color change:

- Red indicates severe failures, e.g., that the module is not inserted.
- Yellow indicates less severe failures, e.g., that the temperature limit has been exceeded.

Point to a module to display a tooltip providing the following state information on the module:

Information	Representation	Range of values	Description
SRS	Decimals	System: 0...65 535 Rack: 0...16 Slot: 1...18	Module identification: System, Rack, Slot
Name	Text		Designation of the information , here always: Online MODULE Information.
Module state	Text	RUN, STOP, NOT CONNECTED, Unknown, ...	State in which the I/O processing module is operating.
Plugged Module Type	Text	Permissible module types	Type of module which is plugged into the rack.
Configured Module Type	Text	Permissible module types	Type of module which is configured and loaded in the controller.
Module Type in Project	Text	Permissible module types	Type of module which is being projected as the digital depiction.
Connection Status of the Protocol	Hexadecimal value	16#00...0F	Status of the connection between each of the processor modules (max. of 2) and the I/O processing module. Each of the bits 0...3 shows the connection to the processor module with the corresponding index. Bit x = 0: Not connected. Bit x = 1: Connected.
Interface Send Status	Hexadecimal value	16#0000...FFFF	Every two bits represent the state of one interface identified with an index 0...16. Bits 0 and 1 apply to interface 0, and so on. Value / Description 00: No message has been received or sent yet, unknown status. 01: OK, no faults. 10: Last data received or sent was defective. 11: No faults during last reception/transmission, one fault occurred before.

<table>
<tr><th>Information</th><th>Representation</th><th>Range of values</th><th>Description</th></tr>
<tr><td>Interface Receive Status</td><td>Hexadecimal value</td><td>16#0000...FFFF</td><td>Every two bits represent the state of one interface identified with an index 0...16. Bits 0 and 1 apply to interface 0, and so on.
<table>
<tr><th>Value</th><th>Description</th></tr>
<tr><td>00</td><td>No message has been received or sent yet, unknown status.</td></tr>
<tr><td>01</td><td>OK, no faults.</td></tr>
<tr><td>10</td><td>Last data received or sent was defective.</td></tr>
<tr><td>11</td><td>No faults during last reception/transmission, one fault occurred before.</td></tr>
</table></td></tr>
<tr><td>Module Error Status</td><td>Hexadecimal value</td><td>16#00...3F</td><td>Bit-coded status of the I/O processing module:
<table>
<tr><th>Bit</th><th>Meaning with value = 1</th></tr>
<tr><td>0</td><td>Warning related to external communication</td></tr>
<tr><td>1</td><td>Warning related to field connection</td></tr>
<tr><td>2</td><td>System warning.</td></tr>
<tr><td>3</td><td>External communication error</td></tr>
<tr><td>4</td><td>Field connection error</td></tr>
<tr><td>5</td><td>System error</td></tr>
<tr><td>6</td><td rowspan="2">Not used</td></tr>
<tr><td>7</td></tr>
</table></td></tr>
<tr><td>Connection Status of System Bus A</td><td>Hexadecimal value</td><td>16#0...3</td><td>Status of the interface to system buses A:
<table>
<tr><th>Value</th><th>Description</th></tr>
<tr><td>0</td><td>The interface is OK.</td></tr>
<tr><td>1</td><td>The interface detected an error during last reception, now it is OK.</td></tr>
<tr><td>2</td><td>An error occurred on the interface.</td></tr>
<tr><td>3</td><td>The interface is switched off.</td></tr>
</table></td></tr>
<tr><td>Connection Status of System Bus A</td><td>Hexadecimal value</td><td>16#0...3</td><td>Status of the interface to system buses A:
<table>
<tr><th>Value</th><th>Description</th></tr>
<tr><td>0</td><td>The interface is OK.</td></tr>
<tr><td>1</td><td>The interface detected an error during last reception, now it is OK.</td></tr>
<tr><td>2</td><td>An error occurred on the interface.</td></tr>
<tr><td>3</td><td>The interface is switched off.</td></tr>
</table></td></tr>
</table>

Table 33: Diagnostic Information Displayed in the Online View for the Hardware Editor

Due to the timing behavior of the operating system, it is possible that the safety parameters are not displayed in the diagnostics. To allow the safety parameters to be displayed in the diagnostics, proceed as follows when opening the diagnostics:

1. Open the Control Panel and wait for all the fields to be refreshed.
2. In the Hardware Editor, open the diagnostics using the context menu of the online view and not of the detail view!

Prior to opening the diagnostics, do not open the detail view and open as few online views as possible (e.g., Force Editor, online test)!

8 Product Data, Dimensioning

This chapter specifies the environmental requirements and the dimensions to be set in the SILworX programming tool.

8.1 Environmental Conditions

Exposing the HIQuad X system to environmental conditions other than those indicated can cause it to malfunction. Additionally, the instructions provided in the module-specific manuals must be observed.

General	
Protection class	Protection class II in accordance with IEC/EN 61131-2
Ambient temperature	0…+60 °C
Transport and storage temperature	-40…+70 °C
Pollution	Pollution degree II
Altitude	< 2000 m
Enclosure	Standard: IP20 If required by the relevant application standards (e.g., EN 60204), the system must be installed in an enclosure with the specified degree of protection (e.g., IP54).
Power Supply Input Voltage	24 VDC, -15...+20 %, $r_p \leq 5$ % SELV, PELV

Table 34: Environmental Conditions

8.2 Dimensioning

For details, refer to the component-specific manuals and communication manual (HI 801 101 E).

For each resource	Value
Number of racks	▪ H51X: 1 base rack and a maximum of 16 extension racks. ▪ H41X: 1 base rack and a maximum of 1 extension rack.
Number of I/O modules	▪ H51X: 256 ▪ H41X: 28 (with extension rack)
Number of I/O elements	Depending on the module type ▪ H51X: 4096 ▪ H41X: 224
Number of processor modules	2
Total program and data memory for all user programs	5 MB less 64 kB for CRCs
Memory for retain variables	32
Number of I/O processing modules for each rack	1 (none in the H51X base rack)
Maximum length of the system buses	50 m between two subscribers.
Number of communication modules	▪ H51X: 0…10 ▪ H41X: 0…2
Puffergröße für Verbindung zum OPC-Server	
Anzahl PES-Benutzergruppen	1…10
Anzahl Anwenderprogramme	1…32
Anzahl Ereignisdefinitionen	0…5000
Größe des nichtflüchtigen Ereignispuffers	1000 Events

Table 35: Dimensioning of a HIQuad X Controller

9 Lifecycle

This chapter describes the following lifecycle phases:

- Installation
- Start-up
- Maintenance and repairs

Instructions for a correct decommissioning and disposal of the products are provided in the manuals for the individual components.

9.1 Installation

This chapter describes how to structure and connect the HIQuad X system.

9.1.1 Mechanical Structure

To ensure proper operation when structuring the HIQuad X system, observe the conditions of use specified in Chapter 2.1.

Observe the instructions for installing base racks and other components specified in the corresponding manuals.

9.1.2 Connecting the Field Level

The field level is connected to the cable plugs of the I/O modules. The cable plug wires must be connected to terminals.

9.1.3 Grounding

Observe the requirements specified in the low voltage directives SELV (Safety Extra Low Voltage) or PELV (Protective Extra Low Voltage).

Functional ground is provided to improve electromagnetic compatibility (EMC). This functional ground must be connected over a large area in the control cabinet.

HIQuad X systems must be grounded as described in the follow chapters.

9.1.3.1 CE-Compliant Structure of the Control Cabinet

In accordance with the EU Council Directive 89/336/EEC, converted in the EMC law for the Federal Republic of Germany, from 1st January 1996, all electrical equipment within the European Union must be labeled with the CE conformity marking for electromagnetic compatibility (EMC).

All modules included in the HIQuad X system bear the CE marking.

To prevent EMC issues when installing controllers in control cabinets and support frames, the following measures must be implemented:

- The H 7034 filter must be installed close to the 24 V supply to suppress interferences directly at the supply point.
- Ensure proper and interference-free electrical installation in the vicinity of the controllers, e.g., do not lay power lines together with field lines or 24 VDC supply lines. For further information, see Chapter 9.1.3.2.
- Observe the instructions provided in this manual related to grounding, shielding and cable routing to sensors and actuators.

9.1.3.2 Surges on Digital Inputs

Due to the short cycle time of the HIQuad X systems, a surge pulse as described in EN 61000-4-5 can be read in to the digital inputs as a short-term high level.

To prevent malfunctions, take one of the following measures for the application:

- Install shielded input wires to prevent surges within the system.
- Noise blanking in the user program: a signal must be present for at least two cycles before it is evaluated.

Caution: This measure increases the system response time!

---

i The measures specified above are not necessary if the plant design precludes surges within the system.

In particular, the design must include protective measures with respect to overvoltage, lightning, grounding and plant wiring in accordance with the relevant standards and the manufacturer's specifications.

9.1.4 Grounding Connectors

All tangible surfaces of the 19-inch HIMA components (e.g., base racks, extension racks and dummy front plates) are chromized and electrically conductive for ESD protection reasons.

Safe electrical connection between components and the control cabinet is ensured by cage nuts with claw fasteners. The claw fasteners penetrate the surface of the pivoting frame [1], ensuring safe electrical contact. Stainless steel screws and flat washers are used to prevent electrical corrosion [2].

The components of the cabinet frame [3] are welded together and are considered an electrical conductive construction element. Short grounding straps [5] with cross-sections of 16 mm^2 or 25 mm^2 are used to conductively connect the pivoting frames, door, mounting rails and mounting plates to the cabinet frame.

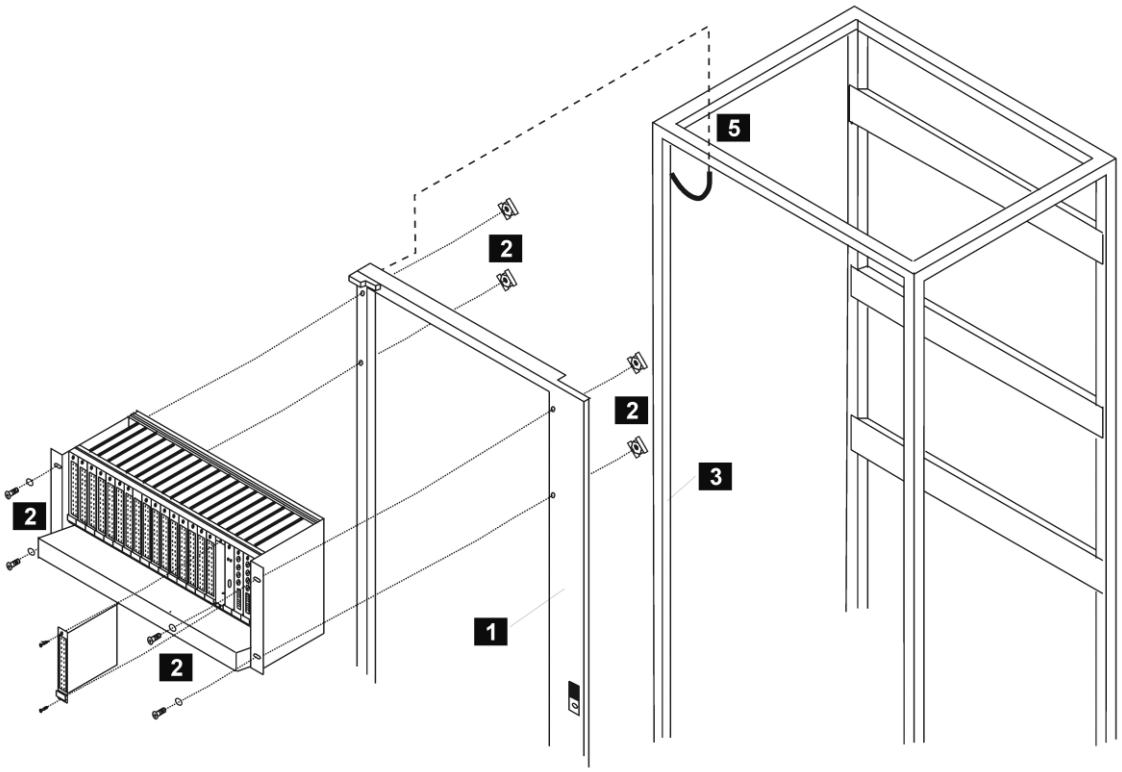

1 Pivoting frame
2 Screws, washers and cage nuts
3 Cabinet frame
4 2 x M 2500 busbar, see Figure 34
5 16 mm^2 or 25 mm^2 grounding strap

Figure 33: Grounding Connectors for Racks

The roof sheeting is secured to the cabinet frame with four lifting eyes [8] (see Figure X). The cabinet frame is electrically connected to the side panels and the backplane through grounding claw fasteners [7] and to the floor panel through screws.

Two M 2500 busbars [4] are installed in the cabinet as standard equipment and connected to the cabinet frame through 25 mm² grounding straps [5]. The busbars can also be used as a separate potential (e.g., to connect to the field cable shielding) if the grounding straps between the busbars and the control cabinet are removed.

An M8 bolt is located on the cabinet frame to allow customers to connect the protective ground cable [6].

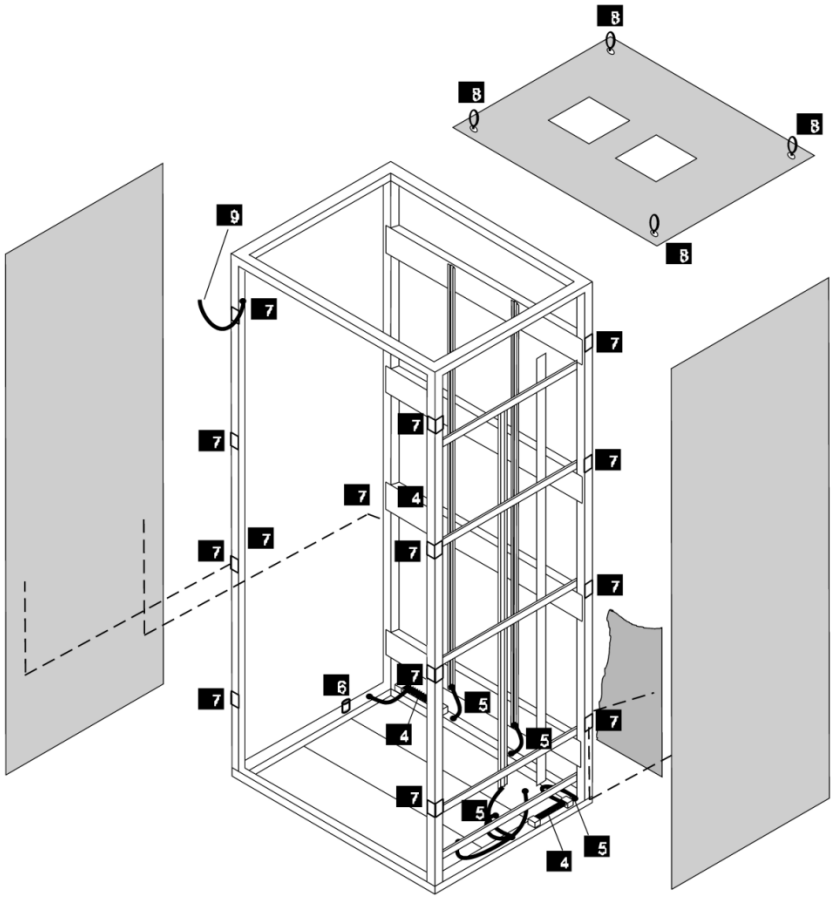

4 2 x M 2500 busbar
5 DIN rails grounded with 16 mm² grounding strap
6 Central grounding point for the cabinet frame (M8 bolts)
7 Mechanical parts are grounded by standard fasteners to the cabinet frame
8 Roof sheeting with 4 lifting eyes and fan exhausts for fan inserts

Figure 34: Grounding Connections in the Control Cabinet

9.1.5 Grounding and Shielding Concept of HIMA Control Cabinets

The following figure shows the grounding and shielding concept of a HIMA control cabinet:

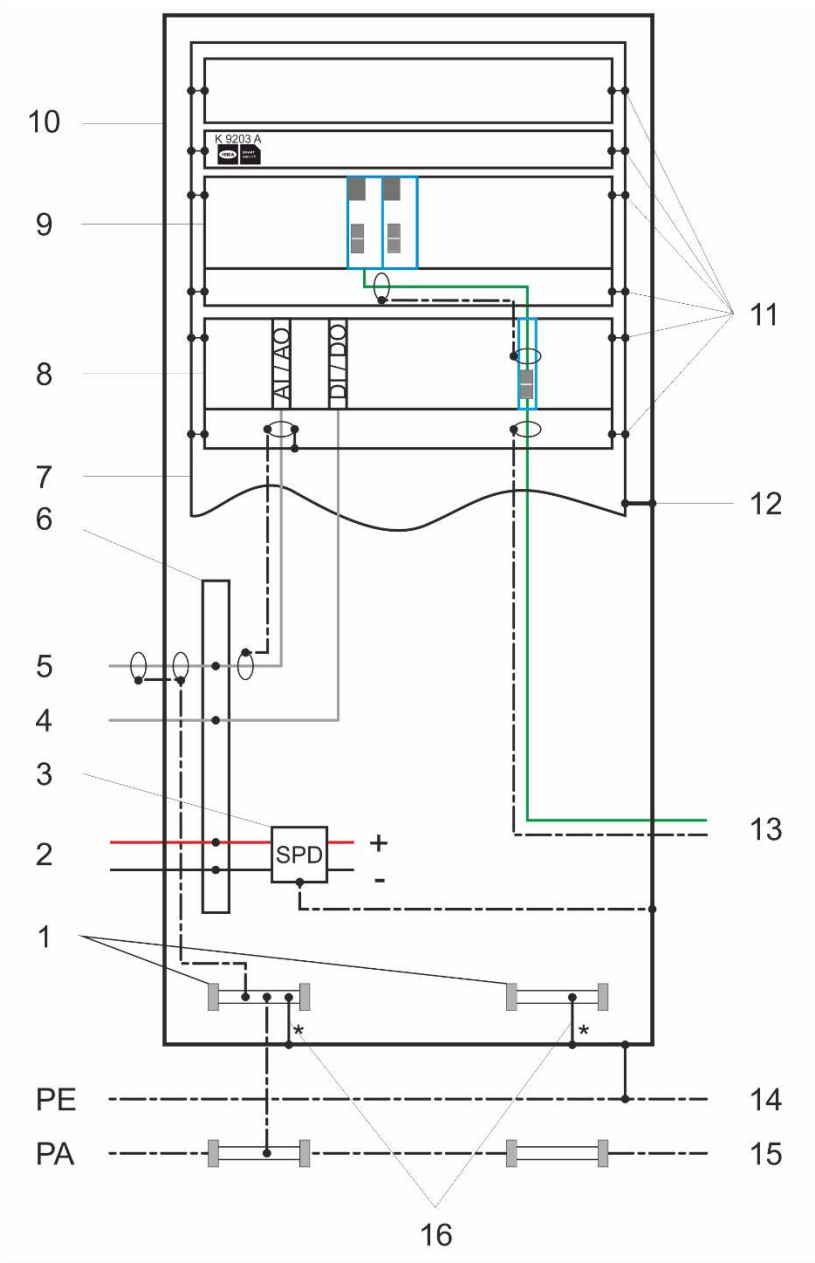

1	M 2500 busbar	9	Base rack
2	24 VDC supply	10	Cabinet frame
3	Filter (surge protective device)	11	Cage nuts and cage clamps
4	Digital signals	12	25 mm grounding connector
5	Analog signals	13	Shielded bus cable
6	Inline terminals	14	Protective ground
7	Pivoting or fixed frame	15	Equipotential bonding
8	Extension rack	16	Standard connection to HIMA control cabinets, to delete if equipotential bonding is applied.

Figure 35: Grounding and Shielding Concept of the HIMA Standard Cabinet

9.1.6 Grounding Several Control Cabinets

Connect several control cabinets to a central, interference-free ground; individually ground the control cabinets of a controller, if required.

Ensure at least 16 mm² cross-section for the connection between the central grounding points of the control cabinets and the common central ground.

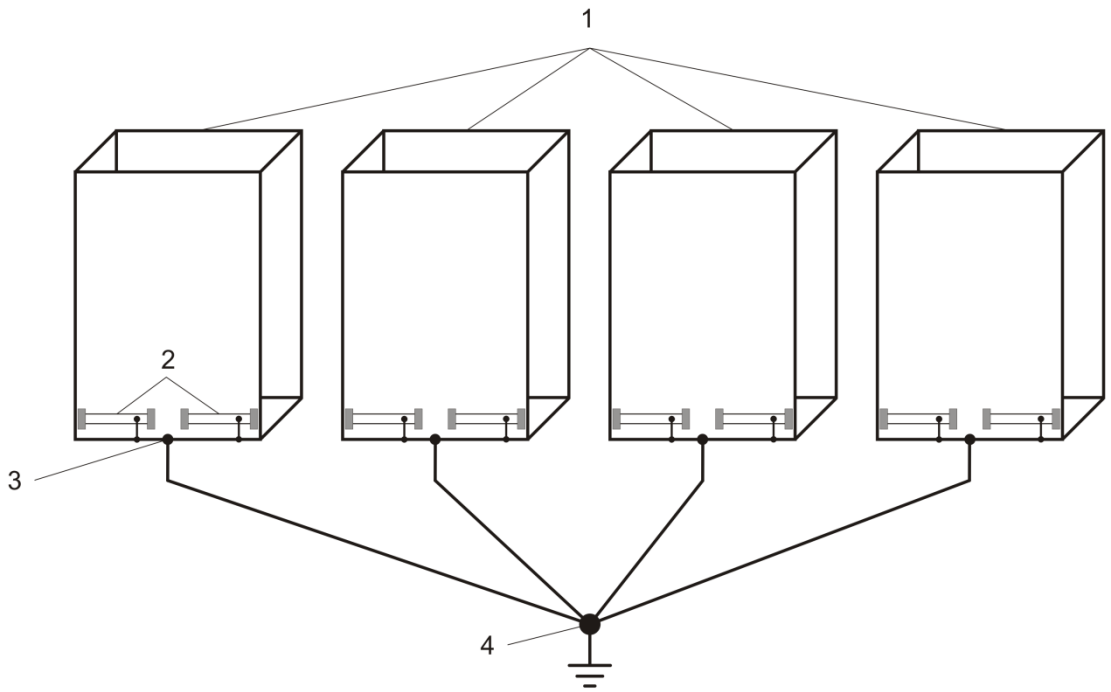

1 Cabinet frame
2 M 2500 busbar
3 Central grounding point
4 Central ground

Figure 36: Control Cabinets with Central Ground

9.1.7 Ungrounded Operation

In ungrounded operation, a single ground fault does not affect the safety and availability of the controller.

If several undetected ground faults occur, faulty control signals can be triggered. For this reason, HIMA recommends using ground fault monitoring for ungrounded operation. Some application standards, e.g., DIN EN 50156-1:2005, prescribe the use of ground fault monitoring. Only use ground fault monitoring devices approved by HIMA.

9.1.8 Grounded Operation

Requirements for grounded operation are proper ground conditions and, whenever possible, separate ground connection, in which no parasitic currents may flow. Only the negative pole L- may be grounded. The positive pole L+ must not be grounded since a potential ground fault on the sensor wire would bridge the affected sensor.

L- can only be grounded at one point within the system. L- is usually grounded directly behind the power supply unit (e.g., on the busbar). Grounding should be easy to access and well separate. The grounding resistance must be ≤ 2 Ω.

9.1.9 Shielding within the Input and Output Areas

Lay field cables for sensors and actuators separately from the power supply lines and at a sufficient distance from electromagnetically active devices (electric motors, transformers).

To avoid interferences, ensure that the field cables are provided with continuous shielding. To this end, connect the shielding on both ends of the field cables. This applies, in particular, to field cables of analog inputs and proximity switches. Exception: The shield in the F 6217 may only be connected to the rack.

If high compensation currents are expected, the shielding must be applied on at least one end. Further measures, e.g., galvanic separation, must be implemented to avoid compensation currents. Additionally, the requirements specified in the module-specific manuals must be observed.

9.1.10 Lightning Protection for Data Lines in HIMA Communication Systems

Lightning protection for data lines can be improved by implementing the following measures:

- Completely shield the field wiring of the HIMA communication systems.
- Properly ground the system.

Install lightning protection devices in places outside of buildings and exposed to lightning.

9.1.11 Cable Colors

The cable colors used in the HIQuad X systems comply with international standards.

Notwithstanding the HIMA standard, other cable colors can be used for wiring due to national standard requirements. In such a case, document and verify the deviations.

9.1.12 Connecting the Supply Voltage

Connect the supply voltage infeed lines to the clamp terminal blocks of the base racks (L1+, L2+, L1-, L2-).

Attach the supply voltage infeed lines of the system fan to the screw terminals.

9.2 Start-Up

Only power up the HIQuad X system after the hardware is completely mounted and all the cables are connected. First start up the control cabinet, then the PES itself.

9.2.1 Starting up the Control Cabinet

Prior to connecting the supply voltage, check if all cables are properly connected, thus ensuring that no risk exists for controller and system.

9.2.1.1 Test of All Inputs and Outputs

Impermissible parasitic voltage (in particular with 230 VAC against ground or L-) can be measured using a universal measuring instrument.

HIMA recommends testing every individual terminal for impermissible parasitic voltage.

When testing external cables for isolation resistance, potential short-circuits or open-circuits, no cable ends must be connected to prevent potential damage or destruction of modules caused by high voltage.

To check for ground faults, unplug the voltage connection plugs from the power distributor and disconnect the supply voltage for sensors and the negative pole of actuators.

If the negative pole is grounded during operation, the ground connection must be interrupted for the duration of the ground fault check. The same applies to the ground connection of ground fault measuring facility, which may be connected to the system.

A megohmmeter or a special measuring instrument must be used to check each connection against ground.

9.2.1.2 Voltage Connection

All the HIQuad X modules are inserted in the racks and the cable plugs are screwed on the I/O modules. Check proper polarity, voltage and ripple for the 24 VDC supply voltage.

9.2.2 Starting up the PES with Processor Modules (F-CPU 01)

Requirements for start-up:

- The hardware is installed.
- The racks are interconnected.
- The PADT network connection is configured such that the modules of the HIQuad X base plate can be reached. If required, enter a routing for the interface card in use.
- A suitable project is available with configured rack ID, IP address and system ID.

To start up the controller with processor modules (F-CPU 01)

1. Connect the supply voltage.
2. Set the system ID and IP address of the left F-CPU 01 processor module:
   - Establish a direct physical connection between PADT and processor module.
   - In the structure tree, select **Hardware** within the resource element, and click **Online** on the Action Bar.
     The *Online Hardware* tab and the *System Login* window appear.
   - Click the **To Module Login** button.
   - In the *Online Hardware,* log in to the processor module (double-click the processor module, the module login window appears).
     Use the MAC address (see the label on the module) to read the IP address and the SRS (**Browse** button in the login window).

- Use the **Change** button on the *Search via MAC* dialog box to display the *Write via MAC* window. This window can be used to set the system ID and IP address on the processor module.

3. Use patch cables to connect the base rack to the extension rack as described in Chapter 3.2 and Chapter 3.3.
   ☑ The LEDs *UP* and *DOWN* as well as the *Red.* LEDs on the associated processor and I/O processing modules are lit, see the F-CPU 01 manual (HI 803 215 E) and the F-IOP 01 manual (HI 803 219 E).
4. Prepare the left processor module:
   - Log in to the processor module: Double click the processor module symbol in the online image.

---

i If a valid configuration is loaded into a processor module and the conditions for system operation are met, all settings such as SRS and IP address from the valid configuration become operative. This is particularly important during the initial operation of a processor module that was previously used.

HIMA recommends resetting to the factory settings (master reset) when using processor modules with an unknown history.

   - Reset the processor module to the factory settings (master reset).
   - If the system is only equipped with one processor module (mono system), set mono operation. To do so, click **Set Mono**/**Redundancy Operation** in the *Online->Start-up* menu.
     This setting only takes effect if a mono project is loaded. Otherwise, the system automatically resets the switch.
5. Set the mode switch of the left processor module to *Stop* and wait until the processor module indicates to be running in system operation.
   ☑ The *Stop* LED is lit or blinking, the *Init* LED is off.
6. Log in to the system.
7. Set the mode switch of the right processor module to *Stop*.
   ☑ The right processor module starts operating redundantly. The *Stop* LED is lit and the *Init* LED is off.
8. Load the existing configuration to the processor modules by performing a **download** (menu functions: **Online -> Resource Download**)
   ☑ The processor modules enter the STOP/VALID CONFIGURATION state.
9. The mode switches on all the processor modules are set to *Run*.
10. Perform a resource cold start.

► The system, i.e., all modules, are in RUN (or in RUN/UP STOP, if the user program was not started).

For more information on how to start up the system, refer to the first steps manual (HI 801 103 E).

9.2.2.1 Faults

- A processor module does not start redundant operation or quits it, in case of malfunction.
- The system enters the STOP/INVALID CONFIGURATION state if the project in SILworX does not match the hardware.

9.3 Maintenance and Repairs

HIMA recommends replacing the fans of the controllers at regular intervals.

i For a safety-related application, the controller must be subject to a proof test at regular intervals. Refer to the safety manual (HI 803 209 E) for more details.

NOTICE

Malfunction due to electrostatic discharge!

Damage to the controller or electronic devices connected to it!

Only qualified personnel may perform maintenance actions to supply, signal and data lines. Implement ESD protection measures. Personnel must be electrostatically discharged prior to any contact with the supply or signal lines!

9.3.1 Connecting the Power Supply after a Service Interruption

After connecting to the power supply, the HIQuad X system modules start in random order. This applies to the HIQuad X modules as well as to the connected remote I/Os.

9.3.2 Connecting the Redundant Power Supply

Because of potential high currents, act with particular caution when connecting a redundant power supply during operation.

⚠ WARNING

Physical injury due to overheating possible when connecting a redundant power source!

Check proper polarity, prior to connecting a redundant power supply unit during operation!

9.3.3 Loading Operating Systems

Refer to the release notes for the corresponding operating system version for details on how to load the operating system.

The HIQuad X system modules F-CPU 01 and F-IOP 01 contain processors and an operating system controlling the module. The operating system is delivered with the module. HIMA is continuously improving the operating systems. The improved versions can be loaded into the module using SILworX.

10 HIQuad X Documentation

The following documents are available:

Document	Document number	Topic HIQuad X	File format
System manual	HI 803 211 E	Description of the system	PDF
Safety manual	HI 803 209 E	Safe use of the HIQuad X system	PDF
F-CPU 01	HI 803 215 E	Processor module, SIL 3	PDF
F-COM 01	HI 803 223 E	Communication module	PDF
F-IOP 01	HI 803 219 E	I/O processing module, SIL 3	PDF
F-PWR 01	HI 803 225 E	24 VDC / 5 VDC power supply unit, 50 W	PDF
F-PWR 02	HI 803 227 E	Buffer module	PDF
F-FAN 01		Description of the system fans	
SILworX first steps manual	HI 801 103 E	Introduction for engineering HIMA controllers using SILworX	PDF
SILworX online help	-		CHM
Communication manual	HI 801 101 E	Communication protocols and their application	PDF
HIPRO-S V2 manual	HI 800 723 E	Safety-related HIPRO-S V2 communication protocol	PDF
Document	Document number	Topic Fuse and power distribution module	File format
K 7205	HI 800 273 E	63 A, 18 circuit breakers, for SELV/PELV	PDF
K 7206	HI 800 275 E	63 A, supply with decoupling for SELV/PELV	PDF
K 7207	HI 800 277 E	Diode on heat sink, 25 A, for SELV/PELV	PDF
K 7212	HI 800 287 E	35 A, 12 circuit breakers with decoupling, for SELV/PELV	PDF
K 7213	HI 800 289 E	35 A, 12 circuit breakers, for SELV/PELV	PDF
K 7214	HI 800 291 E	150 A, 18 circuit breakers, for SELV/PELV	PDF

Table 36: Overview of the HIQuad X Documentation

Appendix

Glossary

Term	Description
AI	Analog input
AO	Analog output
ARP	Address resolution protocol, network protocol for assigning the network addresses to hardware addresses
Backplane PCB	Backplane PCB
COM	Communication module
CRC	Cyclic redundancy check
DI	Digital input
DO	Digital output
EMC	Electromagnetic compatibility
EN	European standard
ESD	Electrostatic discharge
FB	Fieldbus
FBD	Function block diagrams
ICMP	Internet control message protocol, network protocol for status or error messages
IEC	International electrotechnical commission
Interference-free	In this context, interference-free refers to safety-related and non-safety-related modules, which may be operated within a rack, if they are marked as interference-free. In terms of functional safety, the non-safety-related-module has no influence on the safety-related modules
MAC Address	Media access control address, hardware address of one network connection
PADT	Programming and debugging tool (in accordance with IEC 61131-3), PC with SILworX
PELV	Protective extra low voltage
PES	Programmable electronic system
R	Read: The system variable or signal provides a value, e.g., to the user program
R/W	Read/Write (column title for system variable/signal type)
Rack-ID	Rack identification (number)
rPP	Peak-to-peak value of a total AC component
SELV	Safety extra low voltage
SFF	Safe failure fraction, portion of faults that can be safely controlled
SIL	Safety integrity level (in accordance with IEC 61508)
SILworX	Programming tool for HIMA systems
SNTP	Simple network time protocol (RFC 1769)
SRS	System.Rack.Slot addressing of a module
SW	Software
TMO	Timeout
tWDT	Watchdog time
W	Write, the system variable or signal receives a value, e.g., from the user program
WD	Watchdog, device for monitoring the system's correct operation Signal for fault-free process

Index of Figures

Figure 1: H51X Base Rack Completely Assembled 14
Figure 2: Example of Safe H51X Mono Operation (1oo2) 15
Figure 3: Example of H51X Mono System 16
Figure 4: Example of Safe H51X Redundant Operation (1oo2) 17
Figure 5: Example of H51X Redundancy System 19
Figure 6: H41X Base Rack Completely Assembled 20
Figure 7: Example of Safe H41X Mono Operation (1oo2) 21
Figure 8: Example of H41X Mono System 22
Figure 9: Example of Safe H41X Redundant Operation (1oo2) 23
Figure 10: Example of H41X Redundancy System 24
Figure 11: Extension Rack 25
Figure 12: Fan Concept within the Control Cabinet 27
Figure 13: 19-Inch Frame 29
Figure 14: Dimensions of the 19-Inch Frame 30
Figure 15: Rear View of H51X Backplane 31
Figure 16: Rear View of H41X Backplane 33
Figure 17: Connection to the 24 V Power Supply of the Cable Plugs (H41X) 35
Figure 18: Rear View of Extension Rack Backplane 36
Figure 19: Mono 24 V Power Supply 38
Figure 20: Redundant 24 V Power Supply 39
Figure 21: Mono Connection to H51X Base Rack (24 VDC) 41
Figure 22: Redundant Connection to H51X Base Rack (24 VDC) 42
Figure 23: Redundant Connection to H51X Base Rack (24 VDC) and Redundant I/O Level 43
Figure 24: Mono Connection to H51X Base Rack (24 VDC) 44
Figure 25: Mono Connection to H41X Base Rack 45
Figure 26: Redundant Connection to H41X Base Rack and Extension Rack 1 46
Figure 27: 24 VDC Distribution for HIQuad X 47
Figure 28: Extension Rack Connected to a 5 VDC (H51X) 49
Figure 29: Extension Rack Connected to a 5 VDC (H41X) 50
Figure 30: Transient Interference 60
Figure 31: Interference Triggers a Safe Response 61
Figure 32: Effective Direction Associated with Noise Blanking and Output Noise Blanking 62
Figure 33: Grounding Connectors for Racks 96
Figure 34: Grounding Connections in the Control Cabinet 97
Figure 35: Grounding and Shielding Concept of the HIMA Standard Cabinet 98
Figure 36: Control Cabinets with Central Ground 99

Index of Tables

Table 1:	Differences of HIQuad H51X Compared to H41X	13
Table 2:	Power Dissipation of Standard Control Cabinets	26
Table 3:	Fan Components as a Function of Power Loss	27
Table 4:	Definitions for Calculating the Power Dissipation	28
Table 5:	Installation Types for Control Cabinets	28
Table 6:	Rack Backplanes	29
Table 7:	Connection to the 24 V Power Supply	31
Table 8:	Spring Terminals for Buffered Voltage	32
Table 9:	Spring Terminals for 5 V Power Supply	32
Table 10:	Spring Terminals in 5 Signaling Relays for Buffer Module	32
Table 11:	Connection to the 24 V Power Supply	34
Table 12:	Spring Terminals for 5 V Power Supply	34
Table 13:	Spring Terminals for 24 V Auxiliary Voltages in I/O Modules	35
Table 14:	Thresholds of the Temperature States	37
Table 15:	Assignment of F 7133 Power Distribution Modules to I/O Module Slots	47
Table 16:	Allowed Power Consumption in Relation to the Number of Power Supply Units	51
Table 17:	Allowed Power Consumption in Relation to the Number of Power Supply Units	51
Table 18:	Operating System States, States Entered	55
Table 19:	Operating System States, User Interventions	56
Table 20:	Possible I/O Modules to Be Used in HIQuad X	58
Table 21:	Example for Calculating the Minimum and Maximum Noise Blanking Time	59
Table 22:	Supported Variable Types	68
Table 23:	System Variables at Different Project Levels	69
Table 24:	Resource System Parameters	72
Table 25:	Settings for Target Cycle Time Mode	73
Table 26:	System Parameters for Output Variables	77
Table 27:	System Parameter for Input Variables	80
Table 28:	Access Modes for the PADT User Management	85
Table 29:	Parameters for User Groups in the PES User Management	87
Table 30:	Blinking Frequencies of the LEDs	89
Table 31:	Maximum Number of Entries Stored in the Diagnostic History per Module Type	89
Table 32:	Data Field of Diagnostic Message	90
Table 33:	Diagnostic Information Displayed in the Online View for the Hardware Editor	92
Table 34:	Environmental Conditions	93
Table 35:	Dimensioning of a HIQuad X Controller	93
Table 36:	Overview of the HIQuad X Documentation	104

Index

Communication time slice 73
De-energize to trip principle 11
Diagnostic message
  I/O module 89
Diagnostics 88
  History 88
Energize to trip principle 11
ESD protection 12
Loading the operating system 102
PADT user management 84
PES user management 85
Programming 66
Safety-related protocols 56
Specifications 92
System bus 51
To make a controller lockable 80
User account 84
User group 84

MANUAL
System

HI 803 211 E

For further information, please contact:

HIMA Paul Hildebrandt GmbH
Albert-Bassermann-Str. 28
68782 Brühl, Germany

Phone +49 6202 709-0
Fax +49 6202 709-107
E-mail info@hima.com

Learn more about HIMA solutions online:

www.hima.com/en/

www.hima.com

© 2018 by HIMA Paul Hildebrandt GmbH | Specifications subject to change without notice