Technical Information
Levelflex FMP51, FMP52, FMP54

Guided wave radar

Level and interface measurement in liquids

Application

- Rod, rope or coax probe
- Process connection: Starting 3/4" thread, flange or process connections for hygiene requirements (Tri-Clamp, 11851)
- Temperature: −196 to +450 °C (−320 to +842 °F)
- Pressure: −1 to +400 bar (−14.5 to +5 800 psi)
- Maximum measuring range: Rod 10 m (33 ft); rope 45 m (148 ft); coax 6 m (20 ft)
- Accuracy: ±2 mm (±0.08 in)
- International explosion protection certificates; WHG; ship building approval; steam boiler approval; EN10204-3.1
- Linearity protocol (3-point, 5-point)

Your benefits

- Reliable measurement even for changing product and process conditions
- HistoROM data management for easy commissioning, maintenance and diagnostics
- Highest reliability due to Multi-Echo Tracking
- Hardware and software developed according to IEC 61508 (up to SIL3)
- Seamless integration into control or asset management systems
- Intuitive user interface in national languages
- Easy proof test for SIL and WHG

Endress+Hauser
People for Process Automation

Table of contents

Important document information 4
Symbols 4

Function and system design 6
Measuring principle 6
Measuring system 10

Input 12
Measured variable 12
Measuring range 12
Blocking distance 14
Measuring frequency spectrum 14

Output 15
Output signal 15
Signal on alarm 16
Linearization 16
Galvanic isolation 16
Protocol-specific data 17

Energieversorgung 22
Terminal assignment 22
Device plug connectors 30
Power supply 31
Power consumption 33
Current consumption 33
Power supply failure 34
Potential equalization 34
Terminals 34
Cable entries 34
Cable specification 34
Overvoltage protection 35

Performance characteristics 36
Reference operating conditions 36
Maximum measured error 36
Resolution 39
Reaction time 39
Influence of ambient temperature 39
Influence of gas layer 40
Gas phase compensation with external pressure sensor (PROFIBUS PA / FOUNDATION Fieldbus) 40
Gas phase compensation with reference signal (option for FMP54) 41

Mounting 43
Mounting requirements 43

Operating conditions: Environment 68
Ambient temperature range 68
Ambient temperature limits 68
Storage temperature 75
Climate class 75
Altitude according to IEC61010-1 Ed.3 75
Degree of protection 75
Vibration resistance 75
Cleaning the probe 75
Electromagnetic compatibility (EMC) 75

Process 76
Process temperature range 76
Process pressure range 76
Dielectric constant (DC) 77
Expansion of the rope probes through temperature 77

Mechanical construction 78
Dimensions 78
Tolerance of probe length 85
Surface roughness of AlloyC-coated flanges 85
Shortening probes 85
Weight 86
Materials: GT18 housing 87
Materials: GT19 housing 88
Materials: GT20 housing 89
Materials: Process connection 91
Materials: Probe 92
Materials: Mounting bracket 94
Materials: Adapter and cable for remote display 95
Materials: Weather protection cover 96

Operability 97
Operating concept 97
Local operation 97
Operation with remote display and operating module FHX50 98
Remote operation 98
Integration in tank gauging system 102
System integration via Fieldgate 103

Certificates and approvals 104
CE mark 104
C-Tick symbol 104
Ex approval 104
Dual seal according to ANSI/ISA 12.27.01 104
Functional Safety 104
Overfill prevention 104
Sanitary compatibility 104
AD2000 105
NACE MR 0175 / ISO 15156 105
NACE MR 0103 105
ASME B31.1 and B31.3 105
Pressure Equipment Directive 105
Steam boiler approval 105
Marine certificate 105
Telecommunications 105
CRN-Zulassung 105
Track record 107
Test, Certificate 108
Other standards and guidelines 109

Ordering information 110
Ordering information 110
3-point linearity protocol 111
5-point linearity protocol 112
Customized parametrization 114

Accessories **115**
Device-specific accessories 115
Communication-specific accessories 123
Service-specific accessories 124
System components 124

Documentation **125**
Standard documentation 125
Supplementary documentation 125
Safety documentation 126

Registered trademarks **130**

Patents **131**

Important document information

Symbols

Safety symbols

Symbol	Meaning
DANGER	**DANGER!** This symbol alerts you to a dangerous situation. Failure to avoid this situation will result in serious or fatal injury.
WARNING	**WARNING!** This symbol alerts you to a dangerous situation. Failure to avoid this situation can result in serious or fatal injury.
CAUTION	**CAUTION!** This symbol alerts you to a dangerous situation. Failure to avoid this situation can result in minor or medium injury.
NOTICE	**NOTE!** This symbol contains information on procedures and other facts which do not result in personal injury.

Electrical symbols

Symbol	Meaning	Symbol	Meaning
⎓	Direct current	∼	Alternating current
≂	Direct current and alternating current	⏚	**Ground connection** A grounded terminal which, as far as the operator is concerned, is grounded via a grounding system.
⏚	**Protective ground connection** A terminal which must be connected to ground prior to establishing any other connections.	⏚	**Equipotential connection** A connection that has to be connected to the plant grounding system: This may be a potential equalization line or a star grounding system depending on national or company codes of practice.

Symbols for certain types of information

Symbol	Meaning
✓	**Permitted** Procedures, processes or actions that are permitted.
✓✓	**Preferred** Procedures, processes or actions that are preferred.
✗	**Forbidden** Procedures, processes or actions that are forbidden.
i	**Tip** Indicates additional information.
	Reference to documentation
	Reference to page
	Reference to graphic
	Visual inspection

Symbols in graphics

Symbol	Meaning
1, 2, 3 ...	Item numbers
1. , 2. , 3. ...	Series of steps
A, B, C, ...	Views
A-A, B-B, C-C, ...	Sections
EX	**Hazardous area** Indicates a hazardous area.
~~EX~~	**Safe area (non-hazardous area)** Indicates the non-hazardous area.

Function and system design

Measuring principle

Basic principles

The Levelflex is a "downward-looking" measuring system that functions according to the ToF method (ToF = Time of Flight). The distance from the reference point to the product surface is measured. High-frequency pulses are injected to a probe and led along the probe. The pulses are reflected by the product surface, received by the electronic evaluation unit and converted into level information. This method is also known as TDR (Time Domain Reflectometry).

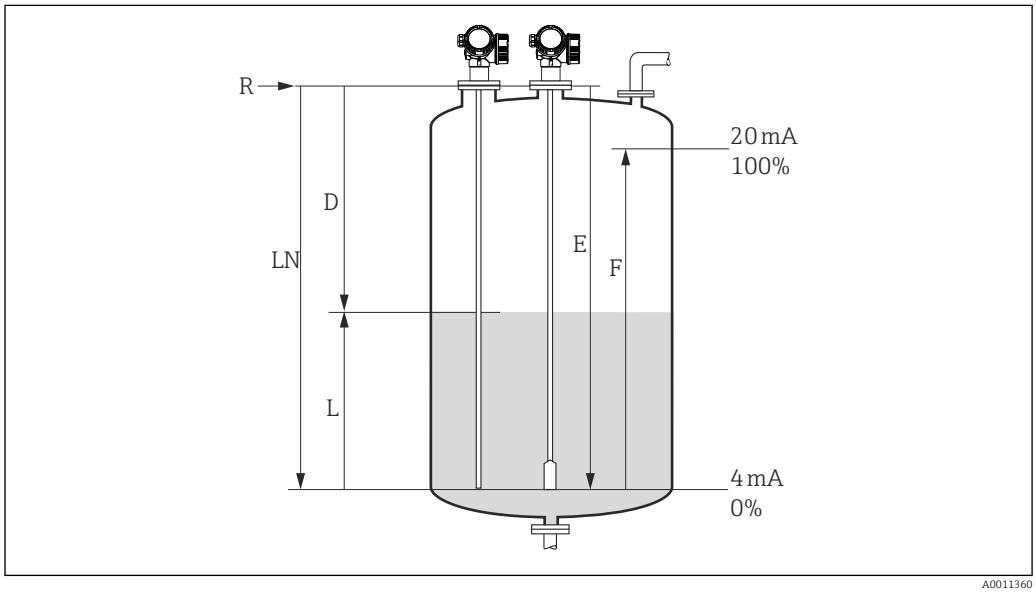

1 Parameters for level measurement with the guided radar

LN Probe length
D Distance
L Level
R Reference point of measurement
E Empty calibration (= zero)
F Full calibration (= span)

If, for rope probes, the DC value is less than 7, then measurement is not possible in the area of the straining weight (0 to 250 mm (0 to 9.84 in) from end of probe; lower blocking distance).

Dielectric constant

The dielectric constant (DC) of the medium has a direct impact on the degree of reflection of the highfrequency pulses. In the case of large DC values, such as for water or ammonia, there is strong pulse reflection while, with low DC values, such as for hydrocarbons, weak pulse reflection is experienced.

Input

The reflected pulses are transmitted from the probe to the electronics. There, a microprocessor analyzes the signals and identifies the level echo which was generated by the reflection of the high-frequency pulses at the product surface. This clear signal detection system benefits from over 30 years' experience with pulse time-of-flight procedures that have been integrated into the development of the PulseMaster® software.

The distance D to the product surface is proportional to the time of flight t of the impulse:

$D = c \cdot t/2$,

where c is the speed of light.

Based on the known empty distance E, the level L is calculated:

$L = E - D$

The reference point R of the measurement is located at the process connection. For details see the dimensional drawing:
- FMP51: → 📄 80
- FMP52: → 📄 82
- FMP54: → 📄 83

The Levelflex possesses functions for interference echo suppression that can be activated by the user. They guarantee that interference echoes from e.g. internals and struts are not interpreted as level echoes.

Output

The Levelflex is preset at the factory to the probe length ordered so that in most cases only the application parameters that automatically adapt the device to the measuring conditions need to be entered. For models with a current output, the factory adjustment for zero point E and span F is 4 mA and 20 mA, for digital outputs and the display module 0 % and 100 %. A linearization function with max. 32 points, which is based on a table entered manually or semi-automatically, can be activated on site or via remote operation. This function allows the level to be converted into units of volume or mass, for example.

Interface measurement

When the high-frequency pulses hit the surface of the medium, only a percentage of the transmission pulse is reflected. In the case of media with a low DC_1, in particular, the other part penetrates the medium. The pulse is reflected once more at the interface point to a second medium with a higher DC_2. The distance to the interface layer now can also be determined taking into account the delayed time-of-flight of the pulse through the upper medium.

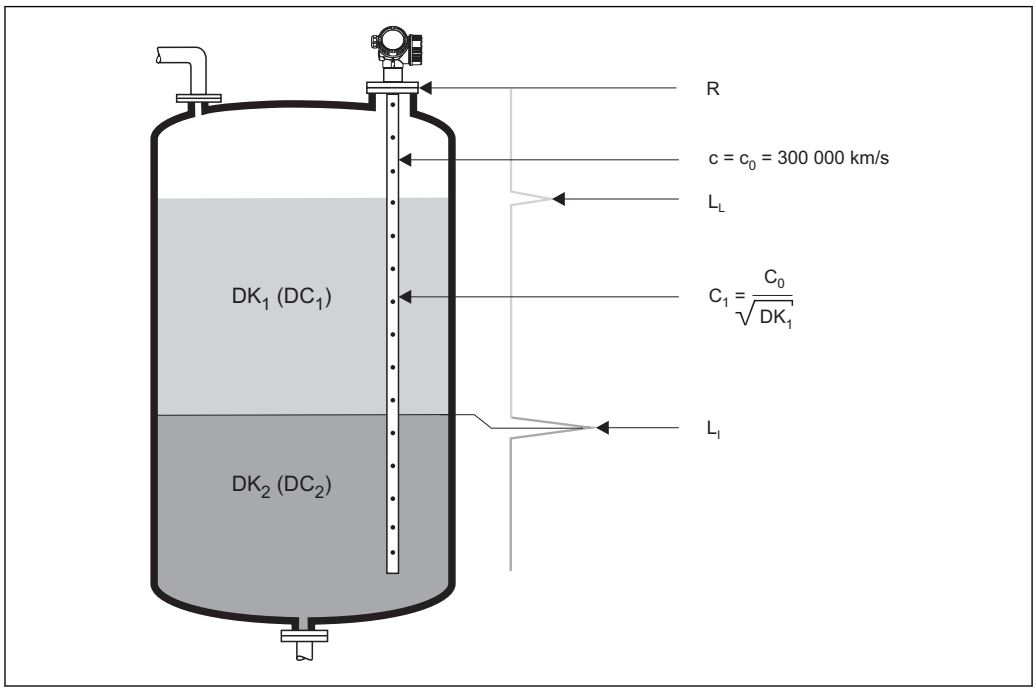

2 *Interface measurement with the guided radar*

LL Level complete
LI Level interface
R Reference point of measurement

In addition, the following general conditions must be observed for interface measurement:
- The DC of the upper medium must be known and constant [1]. The DC can be determined with the aid of the DC manual CP00019F or the "DC Values App". In addition, if the interface thickness is existing and known, the DC can be calculated automatically via FieldCare.
- The DC of the upper medium may not be greater than 10.
- The DC difference between the upper medium and lower medium must be >10.
- The upper medium must have a minimum thickness of 60 mm (2.4 in).

For dielectric constants (DC values) of many media commonly used in various industries refer to:
- the Endress+Hauser DC manual (CP01076F)
- the Endress+Hauser "DC Values App" (available for Android and iOS)

1) For FMP55: Under certain conditions measurement is possible even with a changing DC. For details please contact your Endress+Hauser representative.

Life cycle of the product

Engineering
- Universal measuring principle
- Measurement unaffected by medium properties
- Hardware and software developed according to SIL IEC 61508
- Genuine, direct interface measurement

Procurement
- Endress+Hauser being the world market leader in level measurement guarantees asset protection
- Worldwide support and service

Installation
- Special tools are not required
- Reverse polarity protection
- Modern, detachable terminals
- Main electronics protected by a separate connection compartment

Commissioning
- Fast, menu-guided commissioning in only 6 steps
- Plain text display in national languages reduces the risk of error or confusion
- Direct local access of all parameters
- Short instruction manual at the device

Operation
- Multi-echo tracking: Reliable measurement through self-learning echo-search algorithms taking into account the short-term and long-term history in order to check the found echoes for plausibility and to suppress interference echoes.
- Diagnostics in accordance with NAMUR NE107

Maintenance
- HistoROM: Data backup for instrument settings and measured values
- Exact instrument and process diagnosis to assist fast decisions with clear details concerning remedies
- Intuitive, menu-guided operating concept in national languages saves costs for training, maintenance and operation
- Cover of the electronics compartment can be opened in hazardous areas

Retirement
- Order code translation for subsequent models
- RoHS-conforming (Restriction of certain Hazardous Substances), unleaded soldering of electronic components
- Environmentally sound recycling concept

Measuring system

General notes on probe selection

- Normally use rod or coax probes for liquids. Rope probes are used in liquids for measuring ranges > 10 m (33 ft) (> 4 m (13 ft) for FMP52) and with restricted ceiling clearance which does not allow the installation of rigid probes.
- For interface measurement, ideally coax probes or rod probes in a bypass/stilling well are used.
- Coax probes are suited to liquids with viscosities of up to approx. 500 cst. Coax probes can measure most liquefied gases, as of a dielectric constant of 1.4. Moreover, installation conditions, such as nozzles, tank internal fittings etc., have no effect on the measurement when a coax probe is used. A coax probe offers maximum EMC safety when used in plastic tanks.

Probe selection

The various types of probe in combination with the process connections are suitable for the following applications [2]:

Levelflex FMP51						
Type of probe	**Rod probe**		**Rope probe**		**Coax probe [1]**	
	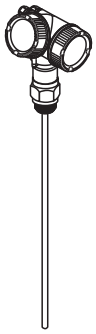 A0011387		A0011388		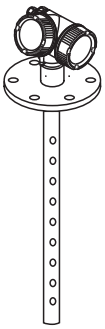 A0011359	
Feature 060 - Probe:	**Option:**		**Option:**		**Option:**	
	AA	8 mm (316L)	LA	4 mm (316)	UA	... mm (316L)
	AB	1/3" (316L)	LB	1/6" (316)	UB	... inch (316L)
	AC	12 mm (316L)	MB	4 mm (316) with center rod	UC	... mm (AlloyC)
	AD	1/2" (316L)	MD	1/6" (316) with center rod	UD	... inch (AlloyC)
	AL	12 mm (AlloyC)				
	AM	1/2" (AlloyC)				
	BA BC	16 mm (316L) divisible				
	BB BD	0.63 in (316L) divisible				
Max. probe length	10 m (33 ft) [2]		45 m (148 ft)		6 m (20 ft)	
For application	level and interface measurement in liquids		level and interface measurement in liquids		level and interface measurement in liquids	

1) Punched for process connections G1-1/2" or flange; multiple holes for 316L, one hole for AlloyC
2) Maximum probe length for indivisible rod probes: 4 m (13 ft)

2) If required, rod and rope probes can be replaced. They are secured with Nord-Lock washers or a thread coating. For further information on service and spare parts please contact the Endress+Hauser service.

Levelflex FMP52				
Type of probe	**Rod probe**		**Rope probe**	
	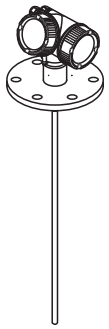 A0011357		A0011358	
Feature 060 - Probe:	**Option:**		**Option:**	
	CA	16 mm (PFA>316L)	OA	4 mm (PFA>316), max. 150 mm nozzle height, center rod
	CB	0.63 in (PFA>316L)	OB	4 mm (PFA>316), max. 300 mm nozzle height, center rod
			OC	1/6" (PFA>316), max. 6 in nozzle height, center rod
			OD	1/6" (PFA>316), max. 12 in nozzle height, center rod
Max. probe length	4 m (13 ft)		45 m (148 ft)	
For application	level and interface measurement in corrosive liquids		level and interface measurement in corrosive liquids	

Levelflex FMP54						
Type of probe	**Rod probe**		**Rope probe**		**Coax probe**	
	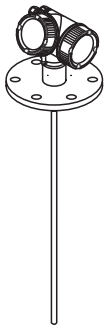 A0011357		A0011358		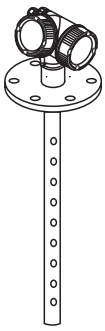 A0011359	
Feature 060 - Probe:	**Option:**		**Option:**		**Option:**	
	AE BA BC	16 mm (316L)	LA	4 mm (316)	UA	... mm (316L)
	AF BB BD	0.63 in (318L)	LB	1/6" (316)	UB	... inch (316L)
Max. probe length	10 m (33 ft) [1]		45 m (148 ft)		6 m (20 ft)	
For application	level and interface measurement in liquids		level and interface measurement in liquids		level and interface measurement in liquids	

1) Maximum probe length for indivisible rod probes: 4 m (13 ft)

Input

Measured variable

The measured variable is the distance between the reference point and the product surface.

Subject to the empty distance entered "E" the level is calculated.

Alternatively, the level can be converted into other variables (volume, mass) by means of linearization (32 points).

Measuring range

The following table describes the media groups and the possible measuring range as a function of the media group.

Levelflex FMP51, FMP54					
Media group	DC (ε_r)	Typical liquids	Measuring range [1]		
			bare metallic rod probes	bare metallic rope probes	coax probes
1	1.4...1.6	condensed gases, e.g. N_2, CO_2	on request		6 m (20 ft)
2	1.6...1.9	▪ liquefied gas, e.g. propane ▪ solvent ▪ Freon ▪ palm oil	▪ one-piece: 4 m (13 ft) ▪ divisible: 10 m (33 ft)	15 to 22 m (49 to 72 ft)	6 m (20 ft)
3	1.9...2.5	mineral oils, fuels	▪ one-piece: 4 m (13 ft) ▪ divisible: 10 m (33 ft)	22 to 32 m (72 to 105 ft)	6 m (20 ft)
4	2.5...4	▪ benzene, styrene, toluene ▪ furan ▪ naphthalene	▪ one-piece: 4 m (13 ft) ▪ divisible: 10 m (33 ft)	32 to 42 m (105 to 138 ft)	6 m (20 ft)
5	4...7	▪ chlorobenzene, chloroform ▪ cellulose spray ▪ isocyanate, aniline	▪ one-piece: 4 m (13 ft) ▪ divisible: 10 m (33 ft)	42 to 45 m (138 to 148 ft)	6 m (20 ft)
6	> 7	▪ aqueous solutions ▪ alcohols ▪ ammonia	▪ one-piece: 4 m (13 ft) ▪ divisible: 10 m (33 ft)	45 m (148 ft)	6 m (20 ft)

1) The measuring range for interface measurement is limited to 10 m (33 ft).

Levelflex FMP52				
Media group	DC (ε_r)	Typical liquids	Measuring range [1]	
			PFA-coated rod probes	PFA-coated rope probes
1	1.4...1.6	condensed gases, e.g. N_2, CO_2	–	–
2	1.6...1.9	▪ liquefied gas, e.g. propane ▪ solvent ▪ Freon ▪ palm oil	4 m (13 ft)	9 to 14 m (30 to 46 ft)
3	1.9...2.5	mineral oils, fuels	4 m (13 ft)	14 to 21 m (46 to 69 ft)
4	2.5...4	▪ benzene, styrene, toluene ▪ furan ▪ naphthalene	4 m (13 ft)	21 to 28 m (69 to 92 ft)
5	4...7	▪ chlorobenzene, chloroform ▪ cellulose spray ▪ isocyanate, aniline	4 m (13 ft)	28 to 32 m (92 to 105 ft)
6	> 7	▪ aqueous solutions ▪ alcohols ▪ acids, alkalis	4 m (13 ft)	32 to 45 m (105 to 148 ft)

1) The measuring range for interface measurement is limited to 10 m (33 ft).

- Reduction of the max. possible measuring range through buildup, above all of moist products.
- Due to the high diffusion rate of ammonia it is recommended with gas-tight bushing [3] for measurements in this medium.

3) always contained in FMP54 ; optionally available for FMP51/52

Blocking distance

The upper blocking distance (= UB) is the minimum distance from the reference point of the measurement (mounting flange) to the maximum level.

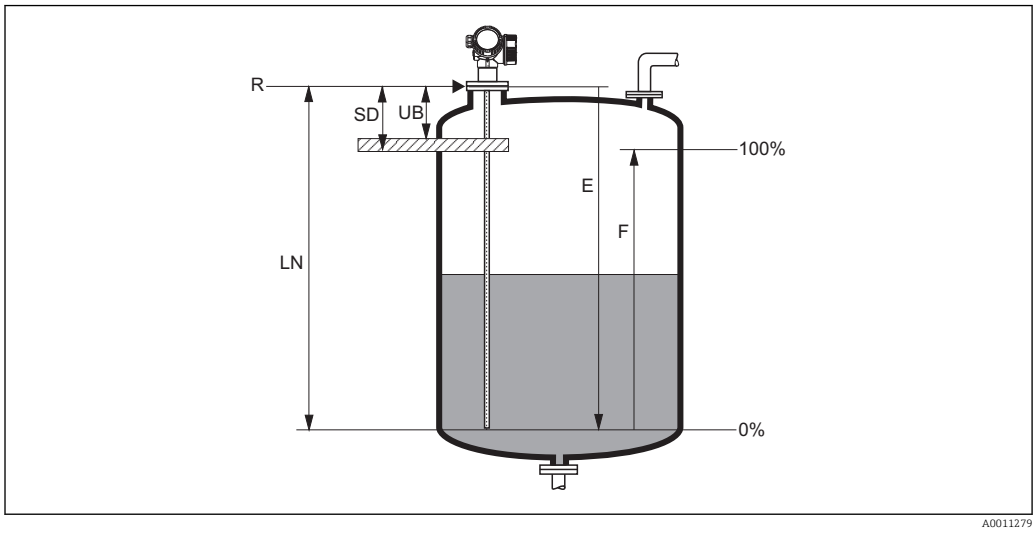

3 Definition of blocking distance and safety distance

R Reference point of measurement
LN Probe length
UB Upper blocking distance
E Empty calibration (= zero)
F Full calibration (= span)
SD Safety distance

Blocking distance (factory setting):
- with coax probes: 0 mm (0 in)
- with rod and rope probes up to 8 m (26 ft): 200 mm (8 in)
- with rod and rope probes exceeding a length of 8 m (26 ft): 0.025 * (length of probe)

The specified blocking distances are preset on delivery. Depending on the application these settings can be changed.

For rod and rope probes and for media with DC > 7 (or generally for stilling well/bypass applications) the blocking distance may be reduced to 100 mm (4").

Within the blocking distance, a reliable measurement can not be guaranteed.

A safety distance SD can be defined in addition to the blocking distance. A warning is generated if the level rises into this safety distance.

Measuring frequency spectrum

100 MHz to 1.5 GHz

Output

Output signal

HART

Signal coding	FSK ±0.5 mA over currency signal
Data transmission rate	1200 Baud
Galvanic isolation	Yes

PROFIBUS PA

Signal coding	Manchester Bus Powered (MBP)
Data transmission rate	31,25 KBit/s, voltage mode
Galvanic isolation	Yes

FOUNDATION Fieldbus

Signal coding	Manchester Bus Powered (MBP)
Data transmission rate	31,25 KBit/s, voltage mode
Galvanic isolation	Yes

Switch output

For HART devices, the switch output is available as an option. See product structure, feature 20: "Power Supply, Output", option B: "2-wire; 4-20mA HART, switch output"

Devices with PROFIBUS PA and FOUNDATION Fieldbus always have a switch output.

Switch output	
Function	Open collector switching output
Switching behavior	Binary (conductive or non-conductive), switches when the programmable switch point is reached
Failure mode	non-conductive
Electrical connection values	U = 10.4 to 35 V_{DC}, I = 0 to 40 mA
Internal resistance	R_I < 880 Ω The voltage drop at this internal resistance has to be taken into account on planning the configuration. For example, the resulting voltage at a connected relay must be sufficient to switch the relay.
Insulation voltage	floating, Insulation voltage 1350 V_{DC} to power supply aund 500 V_{AC} to ground
Switch point	freely programmable, separately for switch-on and switch-off point
Switching delay	freely programmable from 0 to 100 sec. , separately for switch-on and switch-off point
Number of switching cycles	corresponds to the measuring cycle
Signal source device variables	▪ Level linearized ▪ Distance ▪ Terminal voltage ▪ Electronic temperature ▪ Relative echo amplitude ▪ Interface linearized [1)] ▪ Interface distance [1)] ▪ Upper interface thickness [1)] ▪ Relative interface amplitude [1)] ▪ Diagnostic values, Advanced diagnostics
Number of switching cycles	unlimited

1) only if an interface measurement is active

Signal on alarm

Depending on the interface, failure information is displayed as follows:
- Current output (for HART devices)
  - Failsafe mode selectable (in accordance with NAMUR Recommendation NE 43):
    Minimum alarm: 3.6 mA
    Maximum alarm (= factory setting): 22 mA
  - Failsafe mode with user-selectable value: 3.59 to 22.5 mA
- Local display
  - Status signal (in accordance with NAMUR Recommendation NE 107)
  - Plain text display
- Operating tool via digital communication (HART, PROFIBUS PA, FOUNDATION Fieldbus) or service interface (CDI)
  - Status signal (in accordance with NAMUR Recommendation NE 107)
  - Plain text display

Linearization

The linearization function of the device allows the conversion of the measured value into any unit of length or volume. Linearization tables for calculating the volume in cylindrical tanks are pre-programmed. Other tables of up to 32 value pairs can be entered manually or semi-automatically.

Galvanic isolation

All circuits for the outputs are galvanically isolated from each other.

Protocol-specific data

HART

Manufacturer ID	17 (0x11)
Device type ID	0x34
HART specification	6.0
Device description files (DTM, DD)	Information and files at: ▪ www.endress.com ▪ www.hartcomm.org
HART load	Min. 250 Ω
HART device variables	The measured values can be freely assigned to the device variables. **Measured values for PV (primary variable)** ▪ Level linearized ▪ Distance ▪ Interface [1)] ▪ Interface distance [1)] ▪ Upper interface thickness [1)] ▪ Electronic temperature ▪ Relative echo amplitude ▪ Relative interface amplitude [1)] **Measured values for SV, TV, FV (second, third and fourth variable)** ▪ Level linearized ▪ Distance ▪ Interface linearized [1)] ▪ Interface distance [1)] ▪ Upper interface thickness [1)] ▪ Terminal voltage ▪ Electronic temperature ▪ Absolute echo amplitude ▪ Relative echo amplitude ▪ Absolute interface amplitude [1)] ▪ Relative interface amplitude [1)] ▪ Calculated DC
Supported functions	▪ Burst mode ▪ Additional transmitter status

1) only if an interface measurement is active

Wireless HART data

Minimum start-up voltage	11.4 V
Start-up current	3.6 mA
Start-up time	15 s
Minimum operating voltage	11.4 V
Multidrop current	3.6 mA
Set-up time	1 s

PROFIBUS PA

Manufacturer ID	17 (0x11)
Ident number	0x1558
Profile version	3.02
GSD file	Information and files at: ▪ www.endress.com ▪ www.profibus.org
GSD file version	
Output values	**Analog Input:** ▪ Level linearized ▪ Distance ▪ Interface [1)] ▪ Interface distance [1)] ▪ Upper interface thickness [1)] ▪ Terminal voltage ▪ Electronic temperature ▪ Absolute echo amplitude ▪ Relative echo amplitude ▪ Absolute interface amplitude [1)] ▪ Relative interface amplitude [1)] ▪ Calculated DC **Digital Input:** ▪ Extended diagnostic blocks ▪ Status output PFS Block
Input values	**Analog Output:** ▪ Analog value from PLC (for sensor block external pressure and temperature) ▪ Analog value from PLC to be indicated on the display **Digital Output:** ▪ Extended diagnostic block ▪ Level limiter ▪ Sensor block measurement on ▪ Sensor block save history on ▪ Status output
Supported functions	▪ Identification & Maintenance Simple device identification via control system and nameplate ▪ Automatic Ident Number Adoption GSD compatibility mode with respect to the previous device Levelflex M FMP4x ▪ Physical Layer Diagnostics Installation check of the PROFIBUS segment and the Levfelflex FMP4x via terminal voltage and telegram monitoring ▪ PROFIBUS Up-/Download Up to 10 times faster reading and writing of parameters via PROFIBUS Up-/Download ▪ Condensed Status Simple and self-explanatory diagnostic information due to categorization of diagnostic messages

1) only if an interface measurement is active

FOUNDATION Fieldbus

Manufacturer ID	0x452B48
Device type	0x1022
Device Revision	0x01
DD Revision	Information and files at: ▪ www.endress.com ▪ www.fieldbus.org
CFF Revision	
Device Tester Version (ITK Version)	6.01
ITK Test Campaign Number	IT080500
Link Master (LAS) capable	yes
Link Master / Basic Device selectable	yes; default: Basic Device
Node address	Default: 247 (0xF7)
Features supported	Following methods are supported: ▪ Restart ▪ ENP Restart ▪ Setup ▪ Linearization ▪ Self Check
Virtual Communication Relationships (VCRs)	
Number of VCRs	44
Number of Link Objects in VFD	50
Permanent entries	1
Client VCRs	0
Server VCRs	10
Source VCRs	43
Sink VCRs	0
Subscriber VCRs	43
Publisher VCRs	43
Device Link Capabilities	
Slot time	4
Min. inter PDU delay	8
Max. response delay	5

Transducer Blocks

Block	Content	Output values
Setup Transducer Block	Contains all parameters for a standard commissioning procedure	▪ Level or volume [1] (Channel 1) ▪ Distance (Channel 2)
Advanced Setup Transducer Block	Contains all parameters for a more detailed configuration of the device	no output values
Display Transducer Block	Contains all parameters for the configuration of the display module	no output values
Diagnostic Transducer Block	Contains diagnostic information	no output values
Expert Configuration Transducer Block	Contains parameters which require detailed knowledge of the functionalities of the device	no output values
Expert Information Transducer Block	Contains information about the state of the device	no output values
Service Sensor Transducer Block	Contains parameters which can only be operated by Endress+Hauser service personnel	no output values
Service Information Transducer Block	Contains information on the state of device which is relevant for service operations	no output values
Data Transfer Transducer Block	Contains parameters which allow to backup the device configuration in the display module and to restore it into the device.	no output values

1) depending on the configuration of the block

Function Blocks

Block	Content	Number of permanent blocks	Number of instantiable blocks	Execution time	Functionality
Resource Block	The Resource Block contains all the data that uniquely identify the field device. It is an electronic version of a nameplate of the device.	1	0	-	enhanced
Analog Input Block	The AI block takes the manufacturer's input data, selected by channel number, and makes it available to other function blocks at its output.	2	3	25 ms	enhanced
Discrete Input Block	The DI block takes a discrete input value (e.g. indication of an level limit), and makes it available to other function blocks at its output.	1	2	20 ms	standard
PID Block	The PID block serves as proportional-integral-derivative controller and is used almost universally to do closed-loop-control in the field including cascade and feedforward.	1	1	25 ms	standard
Arithmetic Block	This block is designed to permit simple use of popular measurement math functions. The user does not have to know how to write equations. The math algorithm is selected by name, chosen by the user for the function to be done.	1	1	25 ms	standard
Signal Characterizer Block	The signal characterizer block has two sections, each with an output that is a non-linear function of the respective input. The non-linear function is determined by a single look-up table with 21 arbitrary x-y pairs.	1	1	25 ms	standard
Input Selector Block	The input selector block provides selection of up to four inputs and generates an output based on the configured action. This block normally receives its inputs from AI blocks. The block performs maximum, minimum, middle, average and 'first good' signal selection.	1	1	25 ms	standard
Integrator Block	The Integrator Function Block integrates a variable as a function of the time or accumulates the counts from a Pulse Input block. The block may be used as a totalizer that counts up until reset or as a batch totalizer that has a setpoint, where the integrated or accumulated value is compared to pre-trip and trip settings, generating discrete signals when these settings are reached.	1	1	25 ms	standard
Analog Alarm Block		1	1	25 ms	standard

Up to 20 blocks can be instantiated in the device altogether, including the blocks already instantiated on delivery.

Energieversorgung

Terminal assignment

2-wire: 4-20mA HART

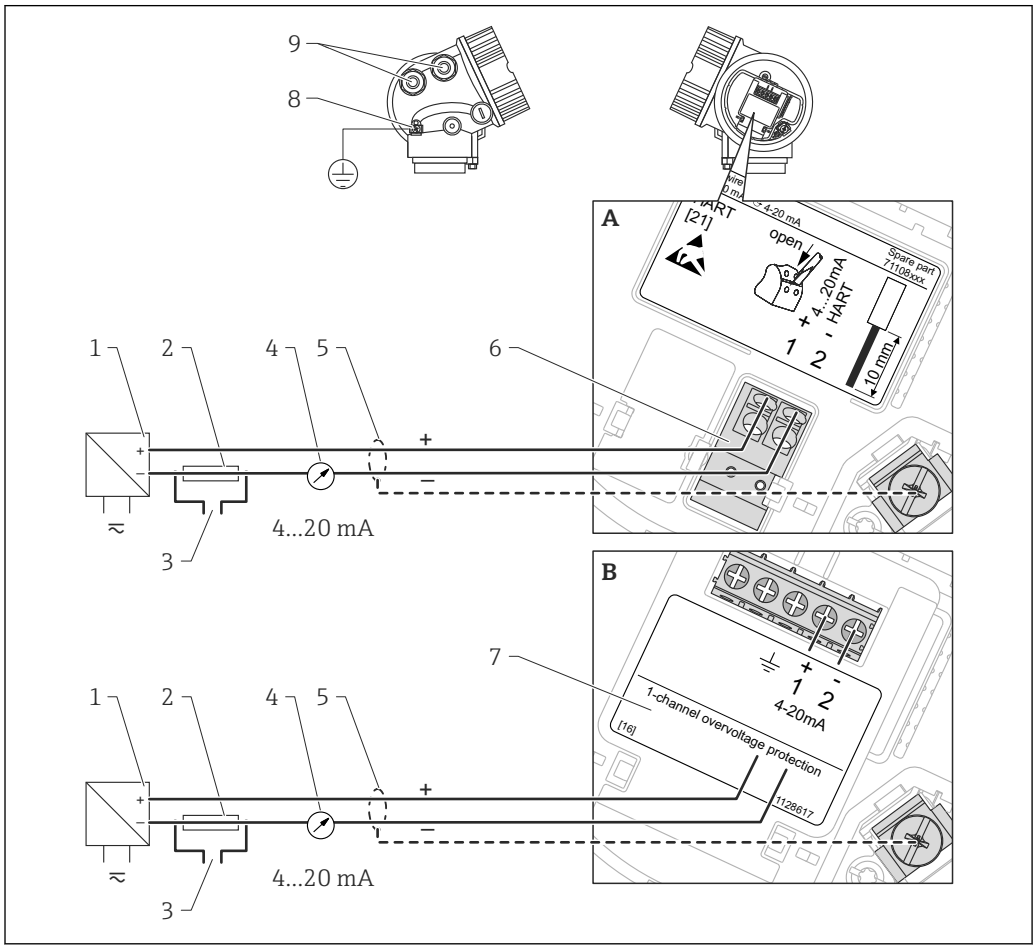

4 *Terminal assignment 2-wire; 4-20mA HART*

A Without integrated overvoltage protection
B With integrated overvoltage protection
1 Active barrier with power supply (e.g. RN221N): Observe terminal voltage
2 HART communication resistor (≥250 Ω): Observe maximum load
3 Connection for Commubox FXA195 or FieldXpert SFX350/SFX370 (via VIATOR Bluetooth modem)
4 Analog display device: Observe maximum load
5 Cable screen; observe cable specification
6 4-20mA HART (passive): Terminals 1 and 2
7 Overvoltage protection module
8 Terminal for potential equalization line
9 Cable entry

2-wire: 4-20mA HART, switch output

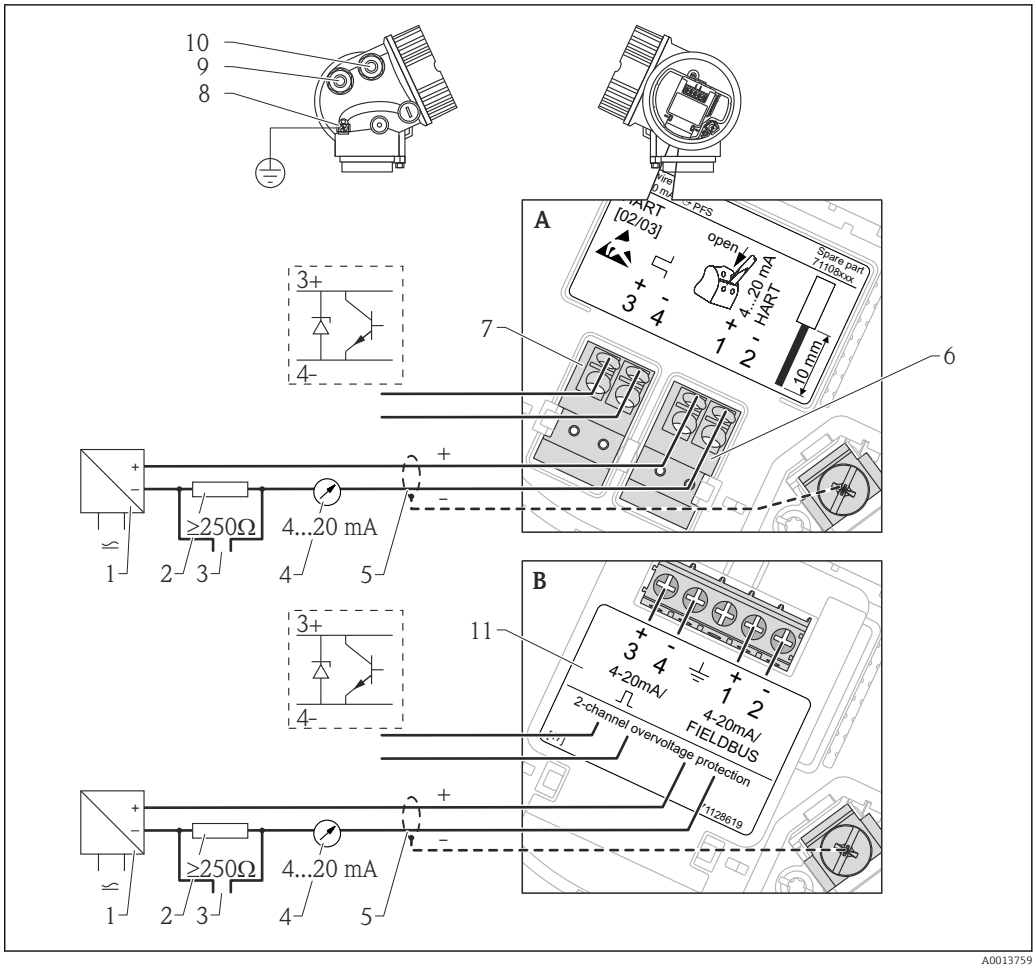

5 *Terminal assignment 2-wire; 4-20mA HART, switch output*

A Without integrated overvoltage protection
B With integrated overvoltage protection
1 Active barrier with power supply (e.g. RN221N): Observe terminal voltage
2 HART communication resistor (≥250 Ω): Observe maximum load
3 Connection for Commubox FXA195 or FieldXpert SFX350/SFX370 (via VIATOR Bluetooth modem)
4 Analog display device: Observe maximum load
5 Cable screen; observe cable specification
6 4-20mA HART (passive): Terminals 1 and 2
7 Switch output (open collector): Terminals 3 and 4
8 Terminal for potential equalization line
9 Cable entry for 4-20mA HART line
10 Cable entry for switch output line
11 Overvoltage protection module

2-wire: 4-20mA HART, 4-20mA

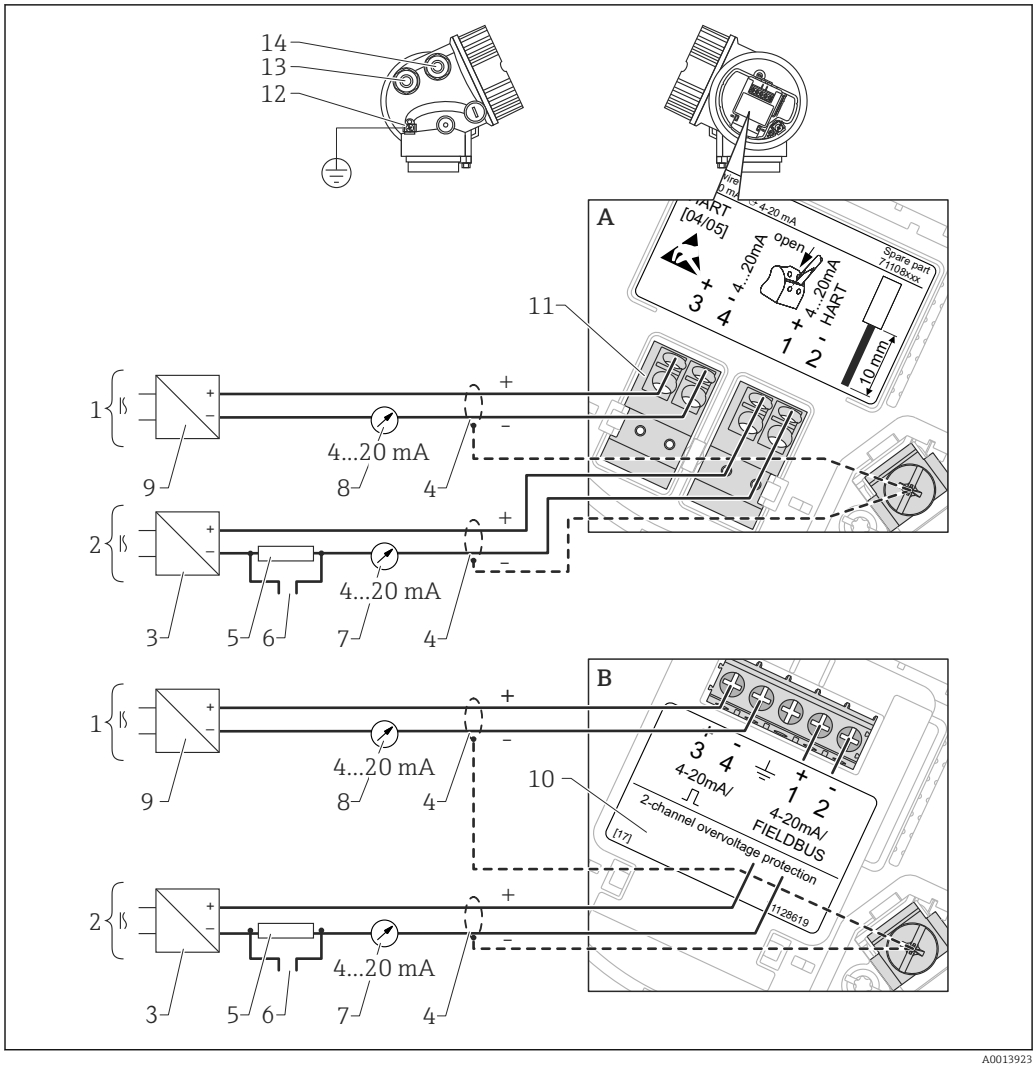

6 Terminal assignment 2-wire, 4-20 mA HART, 4...20mA

A Without integrated overvoltage protection
B With integrated overvoltage protection
1 Connection current output 2
2 Connection current output 1
3 Supply voltage for current output 1 (e.g. RN221N); Observe terminal voltage
4 Cable screen; observe cable specification
5 HART communication resistor (≥250 Ω): Observe maximum load
6 Connection for Commubox FXA195 or FieldXpert SFX350/SFX370 (via VIATOR Bluetooth modem)
7 Analog display device ; observe maximum load
8 Analog display device ; observe maximum load
9 Supply voltage for current output 2 (e.g. RN221N); Obeserve terminal voltage
10 Overvoltage protection module
11 Current output 2: Terminals 3 and 4
12 Terminal for the potential equalization line
13 Cable entry for current output 1
14 Cable entry for current output 2

This version is also suited for single-channel operation. In this case, current output 1 (terminals 1 and 2) must be used.

4-wire: 4-20mA HART (10.4 to 48 V_{DC})

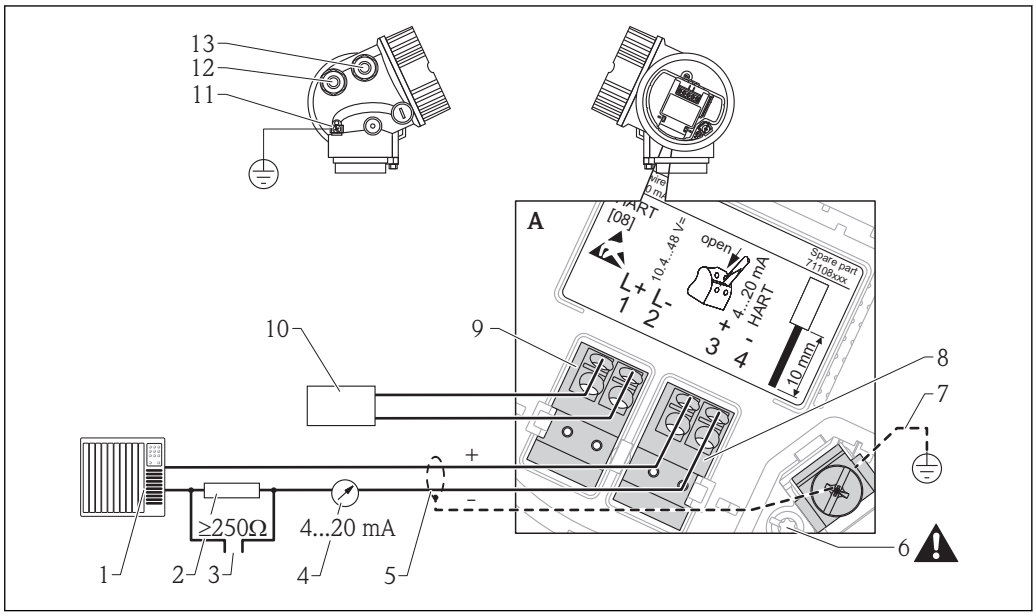

7 *Terminal assignment 4-wire; 4-20mA HART (10.4 to 48 VDC)*

1 *Evaluation unit, e.g. PLC*
2 *HART communication resistor (≥250 Ω): Observe maximum load*
3 *Connection for Commubox FXA195 or FieldXpert SFX350/SFX370 (via VIATOR Bluetooth modem)*
4 *Analog display device: Observe maximum load*
5 *Signal cable including screening (if required), observe cable specification*
6 *Protective connection; do not disconnect!*
7 *Protective earth, observe cable specification*
8 *4...20mA HART (active): Terminals 3 and 4*
9 *Supply voltage: Terminals 1 and 2*
10 *Supply voltage: Observe terminal voltage, observe cable specification*
11 *Terminal for potential equalization*
12 *Cable entry for signal line*
13 *Cable entry for power supply*

4-wire: 4-20mA HART (90 to 253 V_{AC})

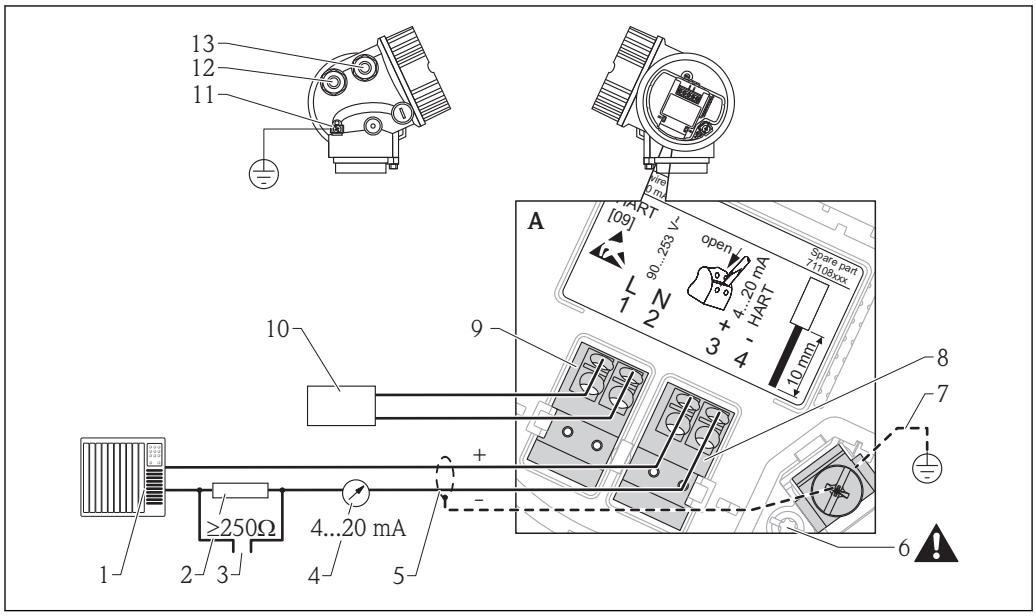

8 *Terminal assignment 4-wire; 4-20mA HART (90 to 253 VAC)*

1 *Evaluation unit, e.g. PLC*
2 *HART communication resistor (≥250 Ω): Observe maximum load*
3 *Connection for Commubox FXA195 or FieldXpert SFX350/SFX370 (via VIATOR Bluetooth modem)*
4 *Analog display device: Observe maximum load*
5 *Signal cable including screening (if required), observe cable specification*
6 *Protective connection; do not disconnect!*
7 *Protective earth, observe cable specification*
8 *4...20mA HART (active): Terminals 3 and 4*
9 *Supply voltage: Terminals 1 and 2*
10 *Supply voltage: Observe terminal voltage, observe cable specification*
11 *Terminal for potential equalization*
12 *Cable entry for signal line*
13 *Cable entry for power supply*

CAUTION

To ensure electrical safety:

- Do not disconnect the protective connection (6).
- Disconnect the supply voltage before disconnecting the protective earth (7).

Connect protective earth to the internal ground terminal (7) before connecting the supply voltage. If necessary, connect the potential matching line to the external ground terminal (11).

In order to ensure electromagnetic compatibility (EMC): Do not only ground the device via the protective earth conductor of the supply cable. Instead, the functional grounding must also be connected to the process connection (flange or threaded connection) or to the external ground terminal.

An easily accessible power switch must be installed in the proximity of the device. The power switch must be marked as a disconnector for the device (IEC/EN61010).

PROFIBUS PA / FOUNDATION Fieldbus

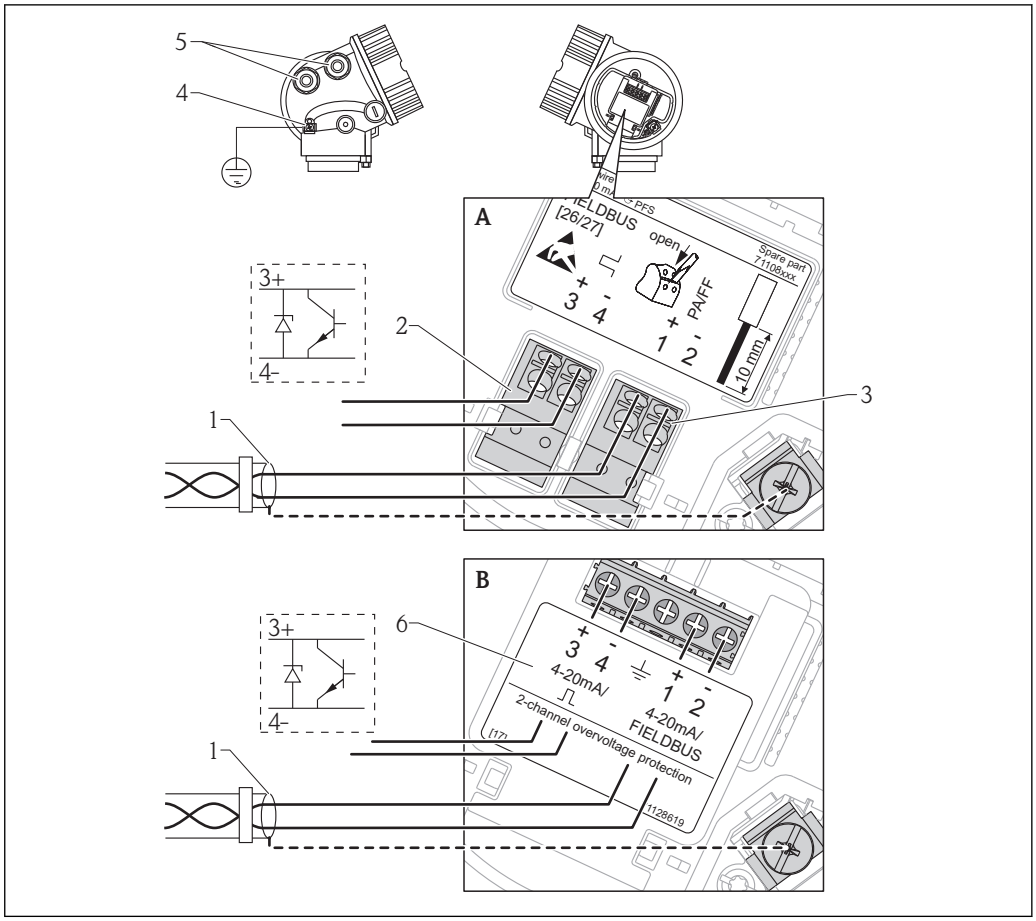

9 Terminal assignment PROFIBUS PA / FOUNDATION Fieldbus

A Without integrated overvoltage protection
B With integrated overvoltage protection
1 Cable screen: Observe cable specifications
2 Switch output (open collector): Terminals 3 and 4
3 PROFIBUS PA / FOUNDATION Fieldbus: Terminals 1 and 2
4 Terminal for potential equalization line
5 Cable entries
6 Overvoltage protection module

Connection examples for the switch output

For HART devices, the switch output is available as an option. See product structure, feature 20: "Power Supply, Output", option B: "2-wire; 4-20mA HART, switch output"

Devices with PROFIBUS PA and FOUNDATION Fieldbus always have a switch output.

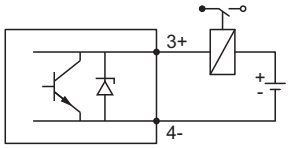

A0015909

10 Connection of a relay

Suitable relays (examples):
- Solid-state relay: Phoenix Contact OV-24DC/480AC/5 with mounting rail connector UMK-1 OM-R/AMS
- Electromechanical relay: Phoenix Contact PLC-RSC-12DC/21

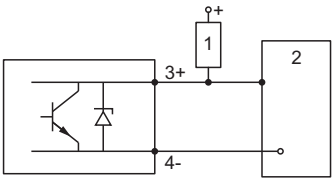

A0015910

11 Connection of a digital input

1 Pull-up resistor
2 Digital input

For optimum interference immunity we recommend to connect an external resistor (internal resistance of the relay or Pull-up resistor) of < 1 000 Ω.

HART loop converter HMX50

The dynamic variables of the HART protocol can be converted into individual 4 to 20 mA sections using the HART loop converter HMX50. The variables are assigned to the current output and the measuring ranges of the individual parameters are defined in the HMX50.

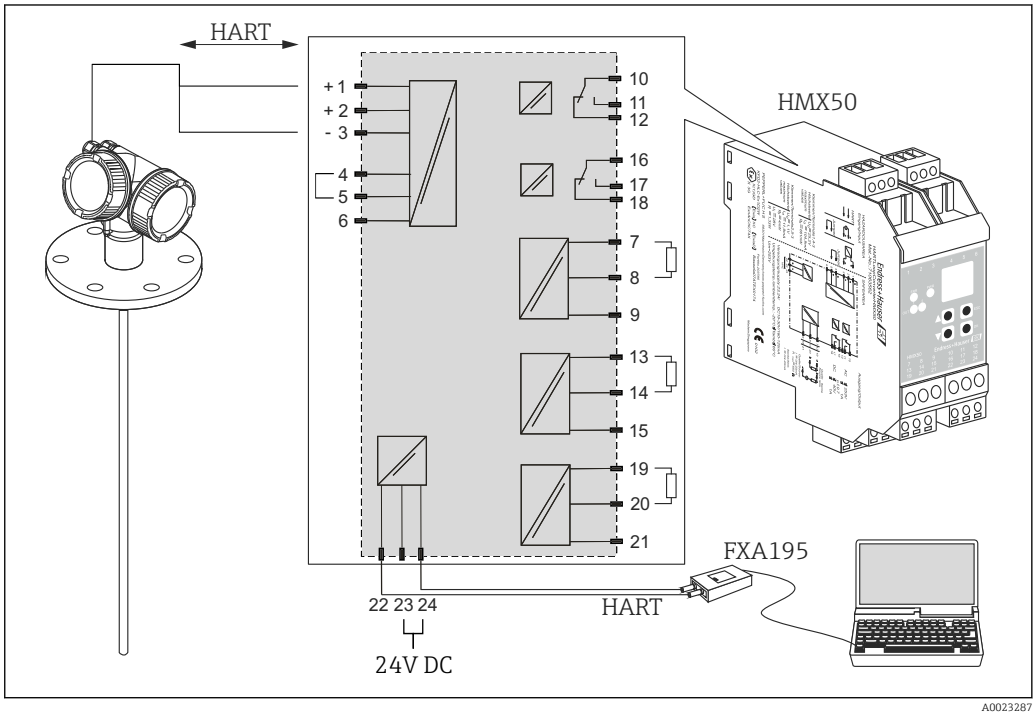

12 *Connection diagram for HART loop converter HMX50 (example: passive 2-wire device and current outputs connected as power source)*

The HART loop converter HMX50 can be acquired using the order number 71063562.

Additional documentation: TI00429F and BA00371F.

Device plug connectors

For the versions with fieldbus plug connector (M12 or 7/8"), the signal line can be connected without opening the housing.

Pin assignment of the M12 plug connector

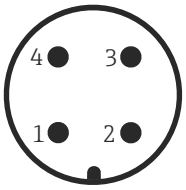

Pin	Meaning
1	Signal +
2	not connected
3	Signal -
4	Ground

Pin assignment of the 7/8" plug connector

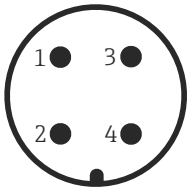

Pin	Meaning
1	Signal -
2	Signal +
3	Not connected
4	Screen

Power supply

An external power supply is required.

Various supply units can be ordered from Endress+Hauser: see "Accessories" section → 124

2-wire, 4-20mA HART, passive

2-wire; 4-20mA HART [1)]

"Approval" [2)]	Terminal voltage U at the device	Maximum load R, depending on the supply voltage U_0 at the supply unit
▪ Non-Ex ▪ Ex nA ▪ CSA GP	11.5 to 35 V [3)]	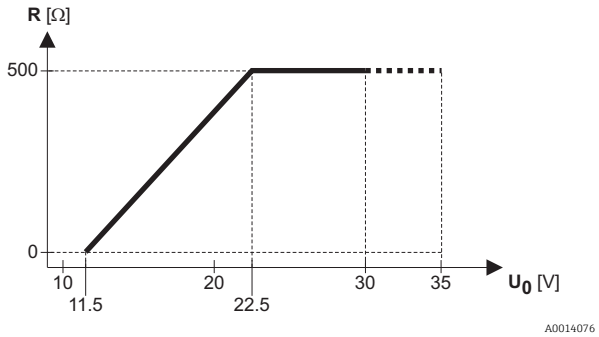
Ex ic	11.5 to 32 V [3)]	
Ex ia / IS	11.5 to 30 V [3)]	
▪ Ex d / XP ▪ Ex ic[ia] ▪ Ex tD / DIP	13.5 to 30 V [4)]	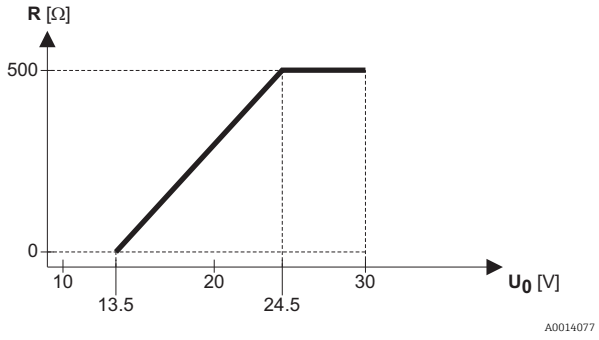

1) Feature 020 of the product structure: option A
2) Feature 010 of the product structure
3) For ambient temperatures $T_a \leq$ -30 °C (-22 °F) a minimum voltage of 14 V is required for the sartup of the device at the MIN error current (3,6 mA). The startup current can be parametrized. If the device is operated with a fixed current I ≥ 4,5 mA (HART multidrop mode), a voltage of U ≥ 11,5 V is sufficient throughout the entire range of ambient temperatures.
4) For ambient temperatures $T_a \leq$ -20 °C (-4 °F) a minimum voltage of 16 V is required for the startup of the device at the MIN error current (3.6 mA).

2-wire; 4-20 mA HART, switch output [1)]

"Approval" [2)]	Terminal voltage U at the device	Maximum load R, depending on the supply voltage U_0 at the supply unit
▪ Non-Ex ▪ Ex nA ▪ Ex nA[ia] ▪ Ex ic ▪ Ex ic[ia] ▪ Ex d[ia] / XP ▪ Ex ta / DIP ▪ CSA GP	12 to 35 V [3)]	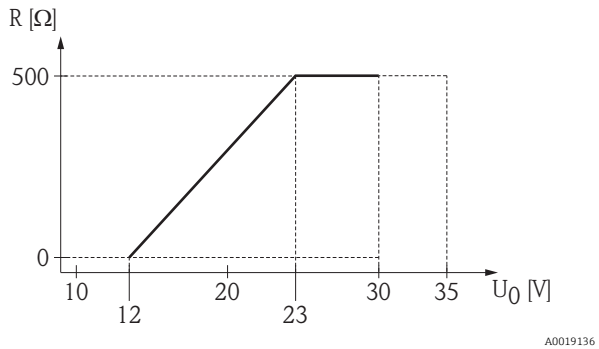
▪ Ex ia / IS ▪ Ex ia + Ex d[ia] / IS + XP	12 to 30 V [3)]	

1) Feature 020 of the product structure: option B
2) Feature 010 of the product structure
3) For ambient temperatures $T_a \leq$ -30 °C (-22 °F) a minimum voltage of 14 V is required for the startup of the device at the MIN error current (3.6 mA).

2-wire; 4-20mA HART, 4-20mA [1)]

"Approval" [2)]	Terminal voltage U at the device	Maximum load R, depending on the supply voltage U_0 at the supply unit
alle	**Channel 1:**	
	13.5 to 30 V [3)]	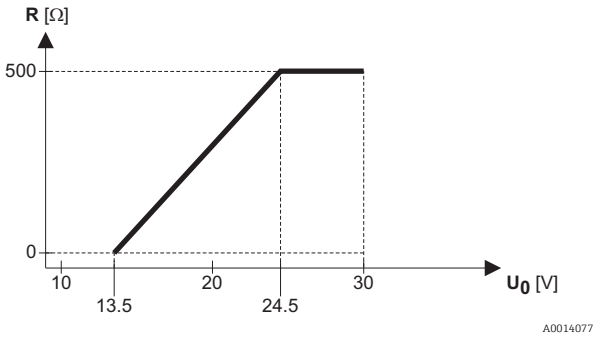
	Channel 2:	
	12 to 30 V	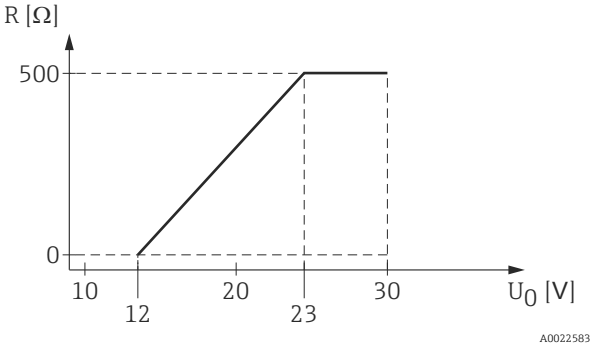

1) Feature 020 of the product structure: option C
2) Feature 010 of the product structure
3) For ambient temperatures $T_a \leq$ -30 °C (-22 °F) a minimum voltage of 16 V is required for the startup of the device at the MIN error current (3.6 mA).

Polarity reversal protection	Yes
Admissible residual ripple at f = 0 to 100 Hz	U_{SS} < 1 V
Admissible residual ripple at f = 100 to 10000 Hz	U_{SS} < 10 mV

4-wire, 4-20mA HART, active

"Power supply; Output" [1]	Terminal voltage	Maximum load R_{max}
K: 4-wire 90-253VAC; 4-20mA HART	90 to 253 V_{AC} (50 to 60 Hz), overvoltage category II	500 Ω
L: 4-wire 10,4-48VDC; 4-20mA HART	10.4 to 48 V_{DC}	

1) Feature 020 of the product structure

PROFIBUS PA, FOUNDATION Fieldbus

"Power supply; Output" [1]	"Approval" [2]	Terminal voltage
E: 2-wire; FOUNDATION Fieldbus, switch output **G:** 2-wire; PROFIBUS PA, switch output	▪ Non-Ex ▪ Ex nA ▪ Ex nA[ia] ▪ Ex ic ▪ Ex ic[ia] ▪ Ex d[ia] / XP ▪ Ex ta / DIP ▪ CSA GP	9 to 32 V [3]
	▪ Ex ia / IS ▪ Ex ia + Ex d[ia] / IS + XP	9 to 30 V

1) Feature 020 of the product structure
2) Feature 010 of the product structure
3) Input voltages up to 35 V will not spoil the device.

Polarity sensitive	No
FISCO/FNICO compliant according to IEC 60079-27	Yes

Power consumption

"Power supply; Output" [1]	Power consumption
A: 2-wire; 4-20mA HART	< 0.9 W
B: 2-wire; 4-20mA HART, switch output	< 0.9 W
C: 2-wire; 4-20mA HART, 4-20mA	< 2 x 0.7 W
K: 4-wire 90-253VAC; 4-20mA HART	6 VA
L: 4-wire 10,4-48VDC; 4-20mA HART	1.3 W

1) Feature 020 of the product structure

Current consumption

HART

Nominal current	3.6 to 22 mA, the start-up current for multidrop mode can be parametrized (is set to 3.6 mA on delivery)
Breakdown signal (NAMUR NE43)	adjustable: 3.59 to 22.5 mA

PROFIBUS PA

Nominal current	14 mA
Error current FDE (Fault Disconnection Electronic)	0 mA

FOUNDATION Fieldbus

Device basic current	15 mA
Error current FDE (Fault Disconnection Electronic)	0 mA

FISCO

U_i	17.5 V
I_i	550 mA
P_i	5.5 W
C_i	5 nF
L_i	10 µH

Power supply failure

- Configuration is retained in the HistoROM (EEPROM).
- Error messages (incl. value of operated hours counter) are stored.

Potential equalization

No special measures for potential equalization are required.

If the device is designed for hazardous areas, observe the information in the documentation "Safety Instructions" (XA, ZD).

Terminals

- **Without integrated overvoltage protection**
  Plug-in spring terminals for wire cross-sections 0.5 to 2.5 mm^2 (20 to 14 AWG)
- **With integrated overvoltage protection**
  Screw terminals for wire cross-sections 0.2 to 2.5 mm^2 (24 to 14 AWG)

Cable entries

Connection of power supply and signal line

To be selected in feature 050 "Electrical connection"
- Gland M20; Material dependent on the approval:
  - For Non-Ex, ATEX, IECEx, NEPSI Ex ia/ic:
    Plastics M20x1.5 for cable Φ 5 to 10 mm (0.2 to 0.39 in)
  - For Dust-Ex, FM IS, CSA IS, CSA GP, Ex nA:
    Metal M20x1.5 for cable Φ 7 to 10 mm (0.28 to 0.39 in) [4)]
  - For Ex d:
    No gland available
- Thread
  - ½" NPT
  - G ½"
  - M20 × 1.5
- Plug M12 / Plug 7/8"
  Only available for Non-Ex, Ex ic, Ex ia

Connection of remote display FHX50

Dependent on feature 030: "Display, Operation":
- "Prepared for display FHX50 + M12 connection":
  M12 socket
- "Prepared for display FHX50 + custom connection":
  Thread M16

Cable specification

- Minimum cross-section: dependent on terminals → 📄 34
- For ambient temperature $T_U \geq 60$ °C (140 °F): use cable for temperature T_U +20 K.

4) The material of the gland is dependent on the housing type; GT18 (stainless steel housing): 316L (1.4404); GT19 (plastic housing) and GT20 (aluminum housing): nickel-coated brass (CuZn).

HART

- A normal device cable suffices if only the analog signal is used.
- A shielded cable is recommended if using the HART protocol. Observe grounding concept of the plant.
- For 4-wire devices: Standard device cable is sufficient for the power line.

PROFIBUS

Use a twisted, screened two-wire cable, preferably cable type A.

For further information on the cable specifications, see Operating Instructions BA00034S "Guidelines for planning and commissioning PROFIBUS DP/PA", PNO Guideline 2.092 "PROFIBUS PA User and Installation Guideline" and IEC61158-2 (MBP).

FOUNDATION Fieldbus

Endress+Hauser recommends using twisted, shielded two-wire cables.

For further information on the cable specifications, see Operating Instructions BA00013S "FOUNDATION Fieldbus Overview", FOUNDATION Fieldbus Guideline and IEC 61158-2 (MBP).

Overvoltage protection

If the measuring device is used for level measurement in flammable liquids which requires the use of overvoltage protection according to DIN EN 60079-14, standard for test procedures 60060-1 (10 kA, pulse 8/20 µs), overvoltage protection has to be ensured by an integrated or external overvoltage protection module.

Integrated overvoltage protection

An integrated overvoltage protection module is available for 2-wire HART as well as PROFIBUS PA and FOUNDATION Fieldbus devices.

Product structure: Feature 610 "Accessory mounted", option NA "Overvoltage protection".

Technical data	
Resistance per channel	2 * 0.5 Ω max
Threshold DC voltage	400 to 700 V
Threshold impulse voltage	< 800 V
Capacitance at 1 MHz	< 1.5 pF
Nominal arrest impulse voltage (8/20 µs)	10 kA

External overvoltage protection

HAW562 or HAW569 from Endress+Hauser are suited as external overvoltage protection.

For detailed information please refer to the following documents:
- HAW562: TI01012K
- HAW569: TI01013K

Performance characteristics

Reference operating conditions

- Temperature = +24 °C (+75 °F) ±5 °C (±9 °F)
- Pressure = 960 mbar abs. (14 psia) ±100 mbar (±1.45 psi)
- Humidity = 60 % ±15 %
- Reflection factor ≥ 0,8 (water surface for coax probe, metal plate for rod and rope probe with min. 1 m (40 in) diameter)
- Flange for rod or rope probe ≥ 300 mm (12 in) diameter
- Distance to obstacles ≥ 1 m (40 in)
- For interface measurement:
  - Coax probe
  - DC of the lower medium = 80 (water)
  - DC of the upper medium = 2 (oil)

Maximum measured error

Typical data under reference operating conditions: DIN EN 61298-2, percentage values in relation to the span.

Output:	digital	analog [1]
Sum of non-linearity, nonrepeatability and hysteresis	**Level measurement:** ▪ Measuring distance up to 15 m (49 ft): ±2 mm (0.08 in) [2] ▪ Measuring distance >15 m (49 ft): ±10 mm (0.39 in)	±0.02 %
	Interface measurement: ▪ Measuring distance up to 500 mm (19.7 in): ±20 mm (0.79 in) ▪ Measuring distance >500 mm (19.7 in): ±10 mm (0.39 in) ▪ If the thickness of the upper medium is <100 mm (3.94 in): ±40 mm (1.57 in)	
Offset / Zero	±4 mm (0.16 in)	±0.03 %

1) Add error of the analogous value to the digital value.
2) For probes with centering stars, the accuracy may deviate close to the centering stars.

If the reference conditions are not met, the offset/zero point arising from the mounting situation may be up to ±12 mm (0.47 in) for rope and rod probes. This additional offset/zero point can be compensated for by entering a correction (parameter "level correction") during commissioning.

Differing from this, the following measuring error is present in the vicinity of the lower probe end:

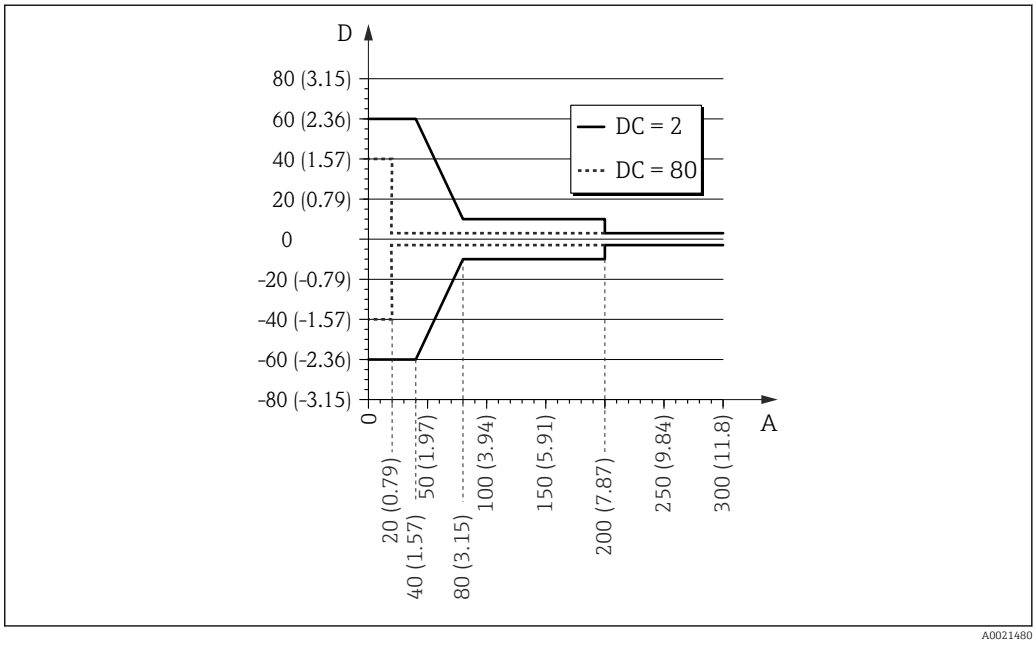

13 Measuring error at the end-of-probe for rod and coax probes

A Distance from probe end [mm(in)]
D Measuring error: Sum of non-linearity, non-repeatability and hysteresis

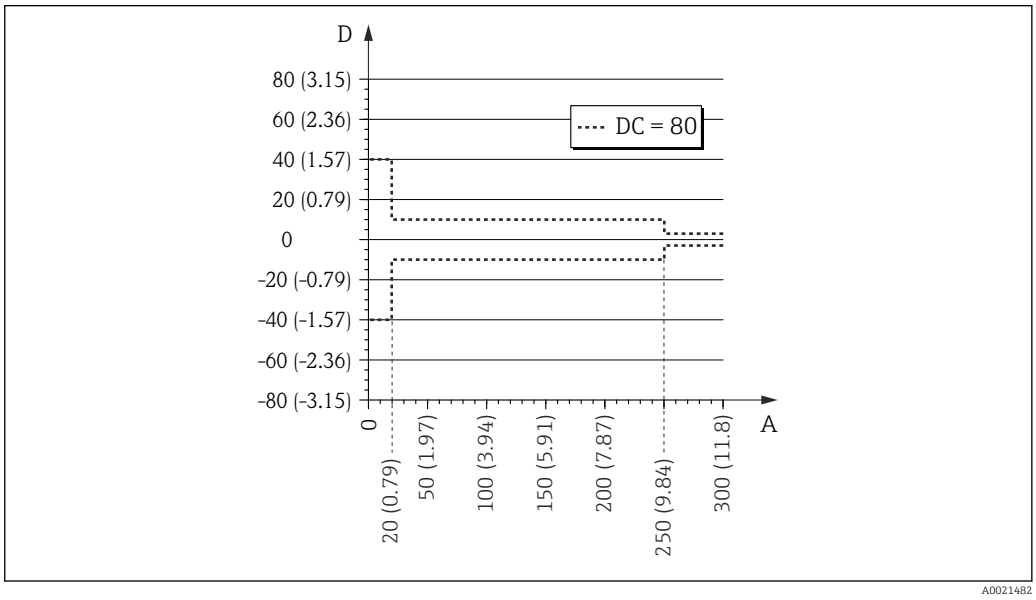

14 Measuring error at the end-of-probe for rope probes

A Distance from probe end
D Measuring error: Sum of non-linearity, non-repeatability and hysteresis

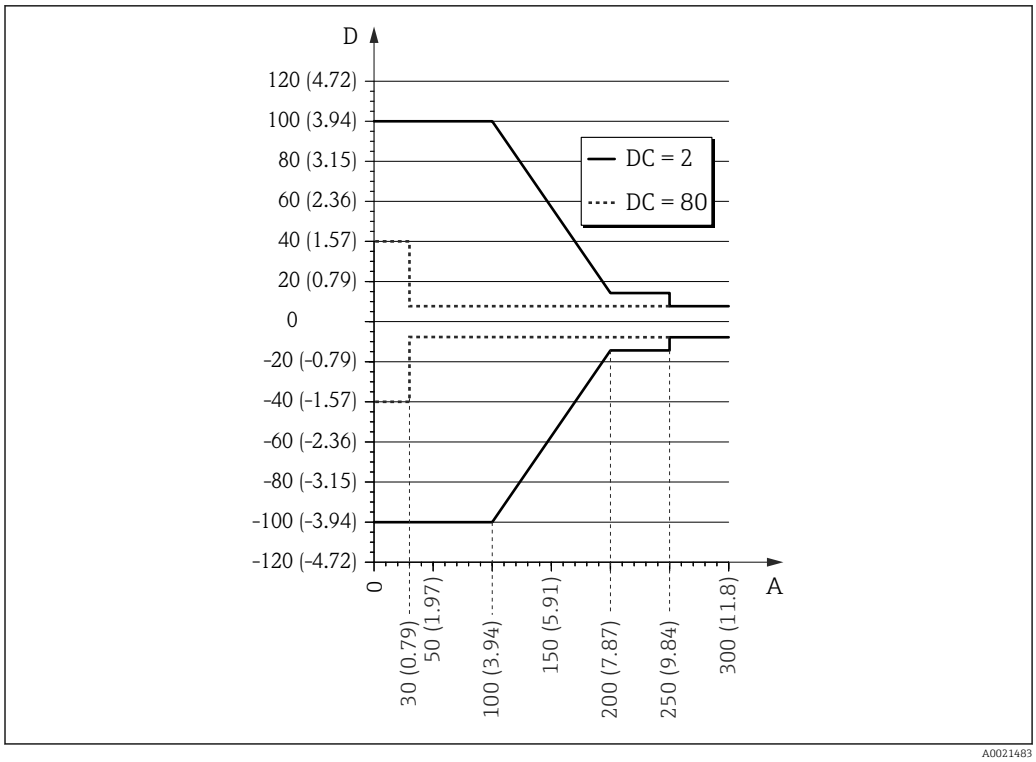

15 Measuring error at the end-of-probe for probes with metallic centering disk (product structure: feature 610 "Accessory mounted", option OA, OB or OC)

A Distance from probe end [mm(in)]
D Measuring error: Sum of non-linearity, non-repeatability and hysteresis

If for rope probes the DC value is less than 7, then measurement is not possible in the area of the straining weight (0 to 250 mm from end of probe; lower blocking distance).

In the area of the upper probe end, the measuring error is as follows (rod/rope only):

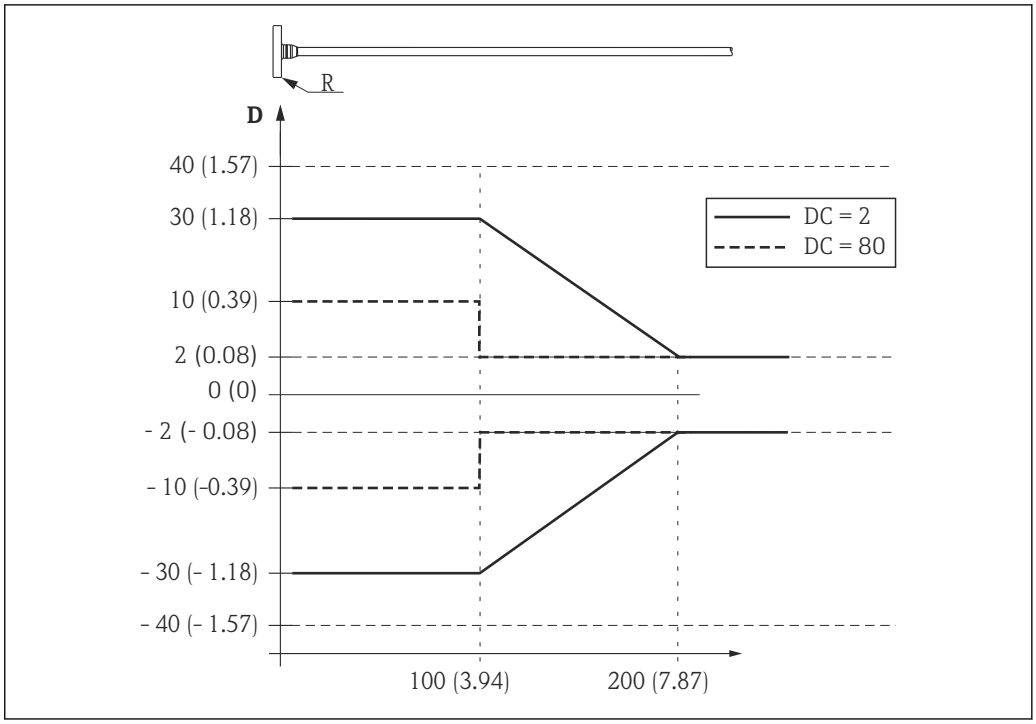

16 Measuring error at the upper end of the probe; dimensions: mm (in)

D Sum of non-linearity, non-repeatability and hysteresis
R Reference point of measurement
DC Dielectric constant

Resolution

- digital: 1 mm
- analog: 1 µA

Reaction time

The reaction time can be parametrized. The following step response times (as per DIN EN 61298-2) [5] are valid if the damping is switched off:

Level measurement		
Probe length	**Sampling rate**	**Step response time**
< 10 m (33 ft)	3.6 measurements/second	< 0.8 s
< 40 m (131 ft)	≥ 2.7 measurements/second	< 1 s

Interface measurement		
Probe length	**Sampling rate**	**Step response time**
< 10 m (33 ft)	≥ 1.1 measurements/second	< 2.2 s

Influence of ambient temperature

The measurements are carried out in accordance with EN 61298-3

- digital (HART, PROFIBUS PA, FOUNDATION Fieldbus): average T_K = 0.6 mm/10 K
  For FMP51 and FMP52 with remote sensor [6] there is an additional offset of ±0.3 mm/10K (±0.01 in/10K) per 1 m (3.3 ft) of the remote cable.
- analog (current output):
  – zero point (4 mA): average T_K = 0.02 %/10 K
  – span (20 mA): average T_K = 0.05 %/10 K

5) According to DIN EN 61209-2 the response time is the time which passes after a sudden change of the input signal until the output signal for the first time assumes 90% of the steady-state value.
6) Product structure: Feature 600, options MB, MC or MD)

Influence of gas layer

High pressures reduce the propagation velocity of the measuring signals in the gas/vapor above the fluid. This effect depends on the kind of gas/vapor and of its temperature. This results in a systematic measuring error that gets bigger as the distance increases between the reference point of the measurement (flange) and the product surface. The following table illustrates this measured error for a few typical gases/vapors (with regard to distance; a positive value means that too large a distance is being measured):

Gas layer	Temperature		Pressure					
	°C	°F	1 bar (14.5 psi)	10 bar (145 psi)	50 bar (725 psi)	100 bar (1450 psi)	200 bar (2900 psi)	400 bar (5800 psi)
Air	20	68	0.00 %	0.22 %	1.2 %	2.4 %	4.9 %	9.5 %
	200	392	-0.01 %	0.13 %	0.74 %	1.5 %	3.0 %	6.0 %
	400	752	-0.02 %	0.08 %	0.52 %	1.1 %	2.1 %	4.2 %
Hydrogen	20	68	-0.01 %	0.10 %	0.61 %	1.2 %	2.5 %	4.9 %
	200	392	-0.02 %	0.05 %	0.37 %	0.76 %	1.6 %	3.1 %
	400	752	-0.02 %	0.03 %	0.25 %	0.53 %	1.1 %	2.2 %

Gas layer	Temperature		Pressure							
	°C	°F	1 bar (14.5 psi)	2 bar (29 psi)	5 bar (72.5 psi)	10 bar (145 psi)	20 bar (290 psi)	50 bar (725 psi)	100 bar (1450 psi)	200 bar (2900 psi)
Water (saturated steam)	100	212	0.26 %	-	-	-	-	-	-	-
	120	248	0.23 %	0.50 %	-	-	-	-	-	-
	152	306	0.20 %	0.42 %	1.14 %	-	-	-	-	-
	180	356	0.17 %	0.37 %	0.99 %	2.10 %	-	-	-	-
	212	414	0.15 %	0.32 %	0.86 %	1.79 %	3.9 %	-	-	-
	264	507	0.12 %	0.26 %	0.69 %	1.44 %	3.0 %	9.2 %	-	-
	311	592	0.09 %	0.22 %	0.58 %	1.21 %	2.5 %	7.1 %	19.3 %	-
	366	691	0.07 %	0.18 %	0.49 %	1.01 %	2.1 %	5.7 %	13.2 %	76 %

Gas phase compensation with external pressure sensor (PROFIBUS PA / FOUNDATION Fieldbus)

PROFIBUS and FOUNDATION Fieldbus devices can receive the signal of an external pressure sensor through the bus and use it to perform a pressure dependent time-of-flight correction. In the case of saturated steam in the temperature range from 100 to 350 °C (212 to 662 °f), for example, the measuring error of the distance measurement can be reduced by this method from up to 29 % (without compensation) to less than 3 % (with compensation).

Gas phase compensation with reference signal (option for FMP54)

Under high pressure the propagation speed of microwave signals is reduced in the steam (polar media) above the liquid to be measured. As a result, the Levelflex indicates the level too low → 📄 40.

As an option Levelflex is available in a version with automatic gas phase correction, which corrects this error (feature 540 "Application Package", option EF: "Gas Phase Compensation L_{ref}= 300 mm" or EG: "Gas Phase Compensation L_{ref}= 550 mm"). This version of the Levelflex generates a reference reflection in the distance L_{ref} from the flange by a diameter step of the probe rod. The reference reflection must be at least 150 mm (6") above the highest level. By means of the shift of the reference reflection the actual propagation speed is measured and the level value will be automatically corrected.

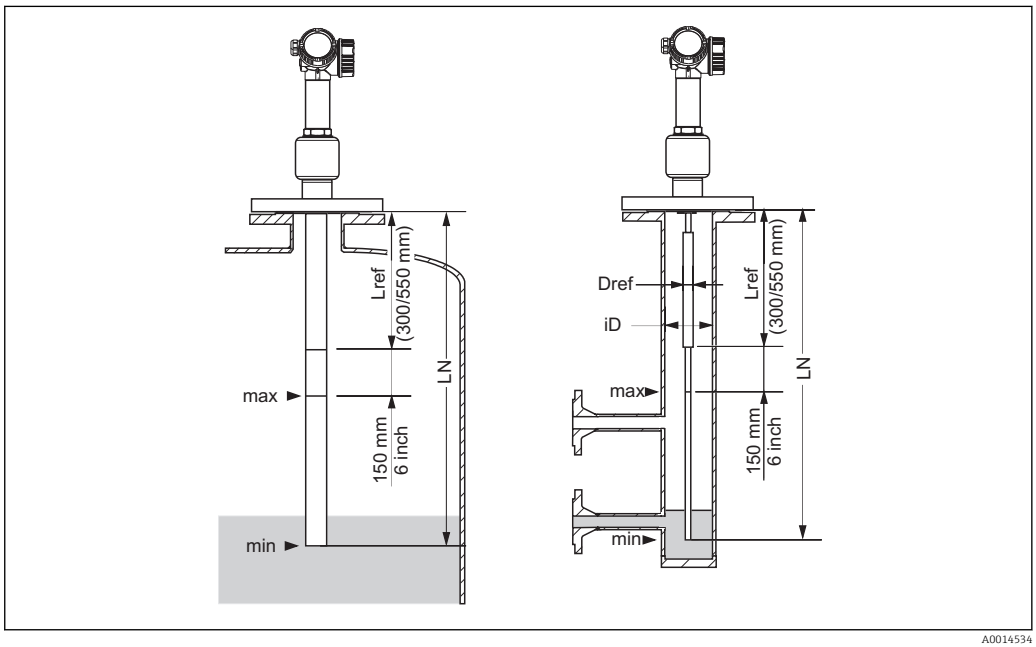

A0014534

Coax probes with reference reflection can be installed in any tank (free in the tank or into a bypass). Coax probes are completely mounted and adjusted ex works. After mounting they are ready for use, additional settings are not necessary.

Rod probes are only recommended if the installation of a coax probe is not possible (e.g. if the bypass diameter is too small).

Rod probes with reference reflection are only suited for mounting in stilling wells and side gauges (bypasses). The diameter D_{ref} of the probe rod in the range of the reference distance L_{ref} must be chosen depending on the pipe inner diameter iD, see table below. In the range of the reference distance L_{ref} the pipe has to be cylindrical; changes of the cross section, for example at flanged connections, are only allowed up to 5% of the inside diamter iD.

Additionally, the settings must be checked by an expert person after mounting and corrected if necessary.

Inner diameter iD of the stilling well/bypass	Diameter D_{ref} of the rod probe within the reference distance L_{ref}
40 mm (1.57") ≤ iD < 45 mm (1.77")	22 mm (0.87")
45 mm (1.77") ≤ iD < 70 mm (2.76")	25 mm (0.98")
70 mm (2.76") ≤ iD < 100 mm (3.94")	30 mm (1.18")

Limitations for coax/rod probes

Maximum probe length LN	▪ For rod probes: LN ≤ 4 000 mm (157 in) ▪ For coax probes: LN ≤ 6 000 mm (236 in)
Minimum probe length LN	LN > L_{ref} + 200 mm (L_{ref} + 7.7")
Reference distance L_{ref}	300 mm (11.8") or 550 mm (21.7"), see feature 540 of the product structure
Maximum level relative to sealing surface of flange	L_{ref} + 150 mm (L_{ref} + 6")
Minimum dielectric constant of the medium	DC > 7

Area of application

Level measurements with high pressure for measuring ranges up to a few meters in polar media with a dielectric constant DC > 7 (e.g. water or ammonia), which would cause a high measuring error without the compensation.

The accuracy of measurement at reference conditions is the higher the larger the reference length L_{ref} and the samller the measuring range:

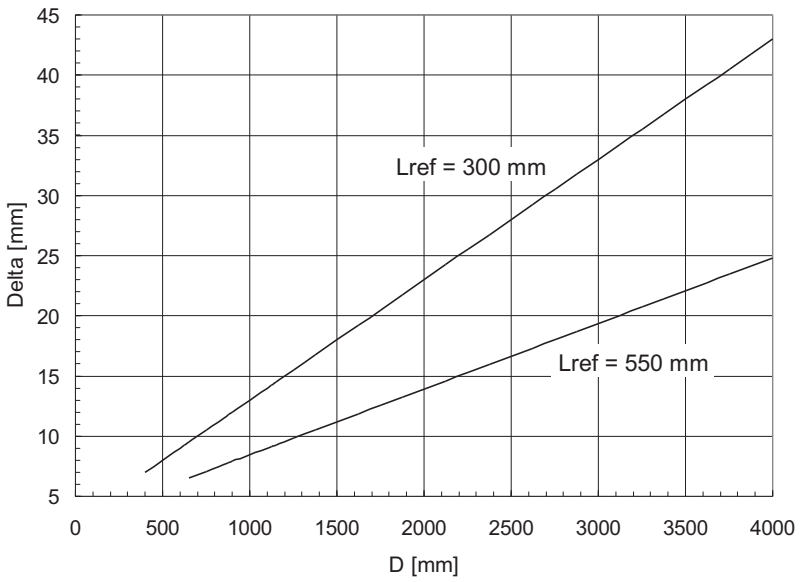

A0014535

D *Distance from liquid surface to lower edge of the flange*
Delta *Measuring error*

If there are fast changes in pressure, there may be an additional error, since the mesured reference distance is filtered with the time constant of the level measurement. In addition, conditions of imbalance - for example due to heating - may cause density gradients within the medium and condensation of steam at the probe. As a result, the level readings at different locations inside the tank may vary slightly. Caused by this application influences the measuring error may be increased by a factor up to 2 to 3.

Mounting

Mounting requirements

Suitable mounting position

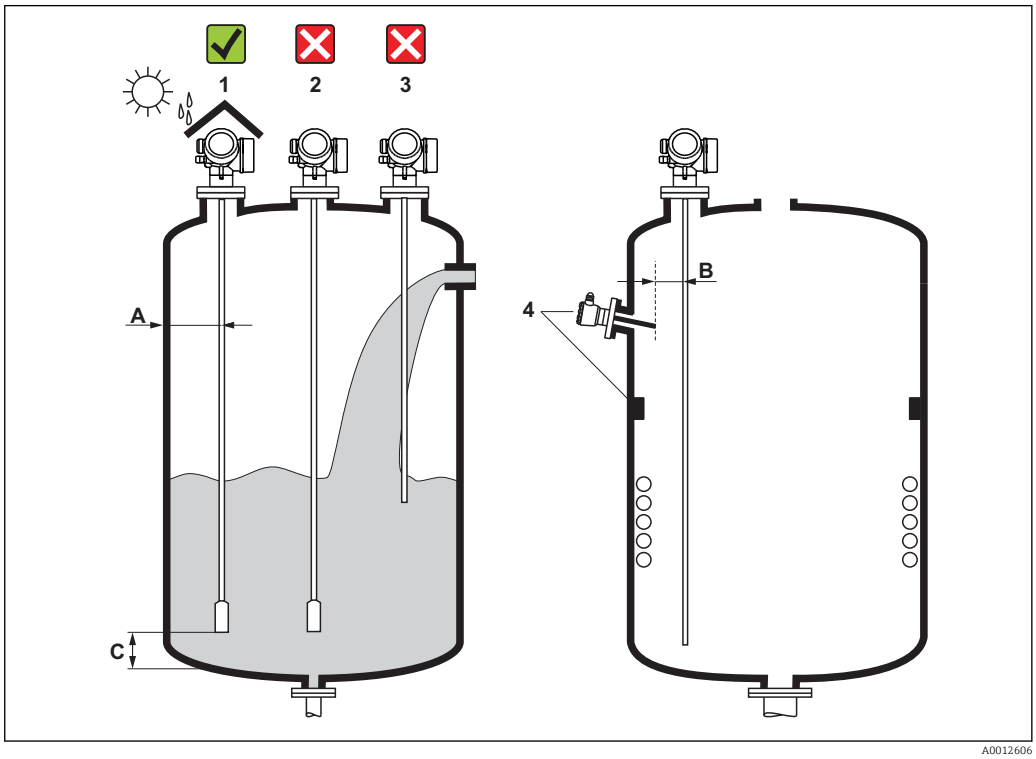

17 *Mounting requirements for Levelflex*

Mounting distances

- Distance (A) between wall and rod or rope probe:
  - for smooth metallic walls: > 50 mm (2 in)
  - for plastic walls: > 300 mm (12 in) to metallic parts outside the vessel
  - for concrete walls: > 500 mm (20 in), otherwise the available measuring range may be reduced.
- Distance (B) between rod or rope probe and internal fittings in the vessel: > 300 mm (12 in)
- When using more than one Levelflex:
  Minimum distance between the sensor axes: 100 mm (3.94 in)
- Distance (C) from end of probe to bottom of the vessel:
  - Rope probe: > 150 mm (6 in)
  - Rod probe: > 10 mm (0.4 in)
  - Coax probe: > 10 mm (0.4 in)

For coax probes the distance to the wall and to internal fittings is arbitrary.

Additional conditions

- When mounting in the open, a weather protection cover (1) may be installed to protect the device against extreme weather conditions.
- In metallic vessels: Preferably do not mount the probe in the center of the vessel (2), as this would lead to increased interference echoes.
  If a central mounting position can not be avoided, it is crucial to perform an interference echo suppresion(mapping) after the commissioning of the device.
- Do not mount the probe in the filling curtain (3).
- Avoid buckling the rope probe during installation or operation (e.g. through product movement against silo wall) by selecting a suitable mounting location.

With suspended rope probes (probe end not fixed at the bottom) the distance between the probe rope and internal fittings in the tank must not fall below 300 mm (12") during the entire process. A sporadic contact between the probe weight and the cone of the vessel, however, does not influence the measurement as long as the dielectric constant of the medium is at least DC = 1.8.

When mounting the electronics housing into a recess (e.g. in a concrete ceiling), observe a minimum distance of 100 mm (4 inch) between the cover of the terminal compartment / electronics compartment and the wall. Otherwise the connection compartment / electronics compartment is not accessible after installation.

Applications with restricted mounting space

Mounting with remote sensor

The device version with a remote sensor is suited for applications with restricted mounting space. In this case the electronics housing is mounted at a separate position from which it is easier accessible.

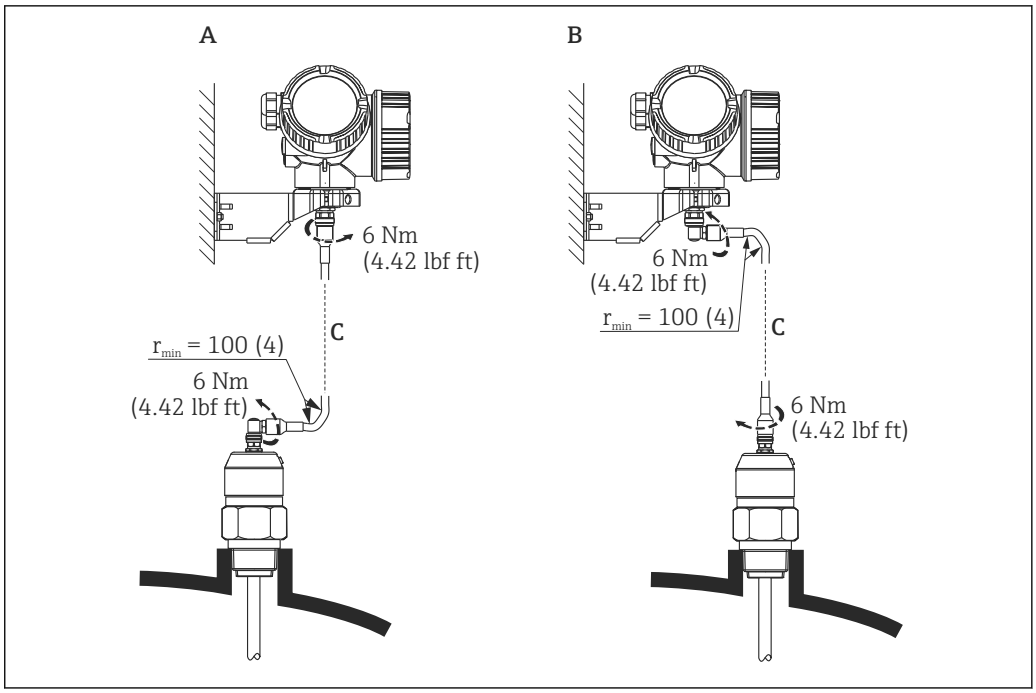

A Angled plug at the probe
B Angled plug at the electronics housing
C Length of the remote cable as ordered

- Product structure, feature 600 "Probe Design":
  - Option MB "Sensor remote, 3m/9ft cable"
  - Option MC "Sensor remote, 6m/18ft cable"
  - Option MB "Sensor remote, 9m/27ft cable"
- The remote cable is supplied with these device versions
  Minimum bending radius: 100 mm (4 inch)
- A mounting bracket for the electronics housing is supplied with these device versions. Mounting options:
  - Wall mounting
  - Pipe mounting; diameter: 42 to 60 mm (1-1/4 to 2 inch)
- The connection cable has got one straight and one angled plug (90°). Depending on the local conditions the angled plug can be connected at the probe or at the electronics housing.

Probe, electronics and connection cable are adjusted to match each other. They are marked by a common serial number. Only components with the same serial number shall be connected to each other.

Divisible probes

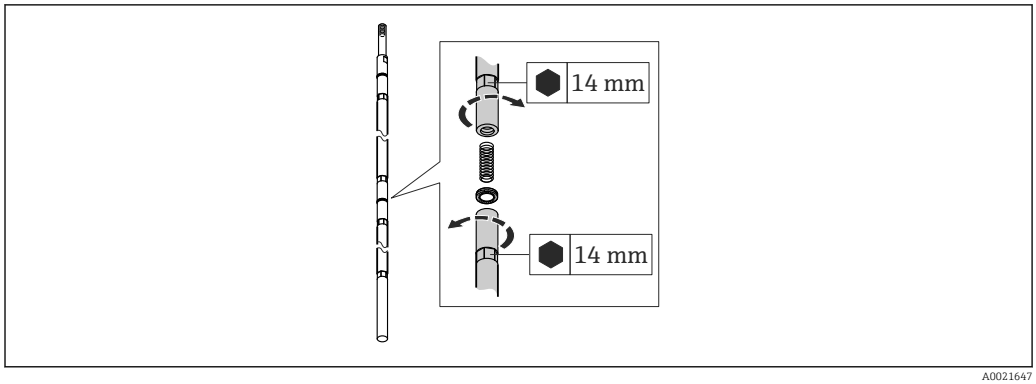

A0021647

If there is little mounting space (distance to the ceiling), it is advisable to use divisible rod probes (Φ 16 mm).

- max. probe length 10 m (394 in)
- max. sideways capacity 30 Nm
- probes are separable several times with the following lengths of the individual parts:
  - 500 mm (20 in)
  - 1 000 mm (40 in)
- torque: 15 Nm

Notes on the mechanical load of the probe

Tensile load limit of rope probes

Sensor	Feature 060	Probe	Tensile load limit [kN]
FMP51	LA, LB MB, MD	Rope 4mm (1/6") 316	5
FMP52	OA, OB, OC, OD	Rope 4mm (1/6") PFA>316	2
FMP54	LA, LB	Rope 4mm (1/6") 316	10

Bending strength of rod probes

Sensor	Feature 060	Probe	Bending strength [Nm]
FMP51	AA, AB	Rod 8mm (1/3") 316L	10
	AC, AD	Rod 12mm (1/2") 316L	30
	AL, AM	Rod 12mm (1/2") AlloyC	30
	BA, BB, BC, BD	Rod 16mm (0.63") 316L divisible	30
FMP52	CA, CB	Rod 16mm (0.63") PFA>316L	30
FMP54	AE, AF	Rod 16mm (0.63") 316L	30
	BA, BB, BC, BD	Rod 16mm (0.63") 316L divisible	30

Bending load (torque) through fluid flow

The formula for calculating the bending torque M impacting on the probe:

$M = c_w \cdot \rho/2 \cdot v^2 \cdot d \cdot L \cdot (L_N - 0.5 \cdot L)$

with:

c_w: Friction factor

ρ [kg/m³]: Density of the medium

v [m/s]: Velocity of the medium perpendicular to the probe rod

d [m]: Diameter of the probe rod

L [m]: Level

LN [m]: Probe length

Calculation example

Friction factor c_w	0,9 (on the assumption of a turbulent current - high Reynolds number)
Density ρ [kg/m³]	1000 (e.g. water)
Probe diameter d [m]	0,008
$L = L_N$	(worst case)

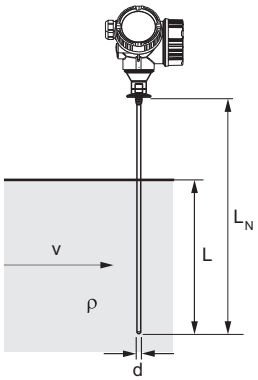

A0014175

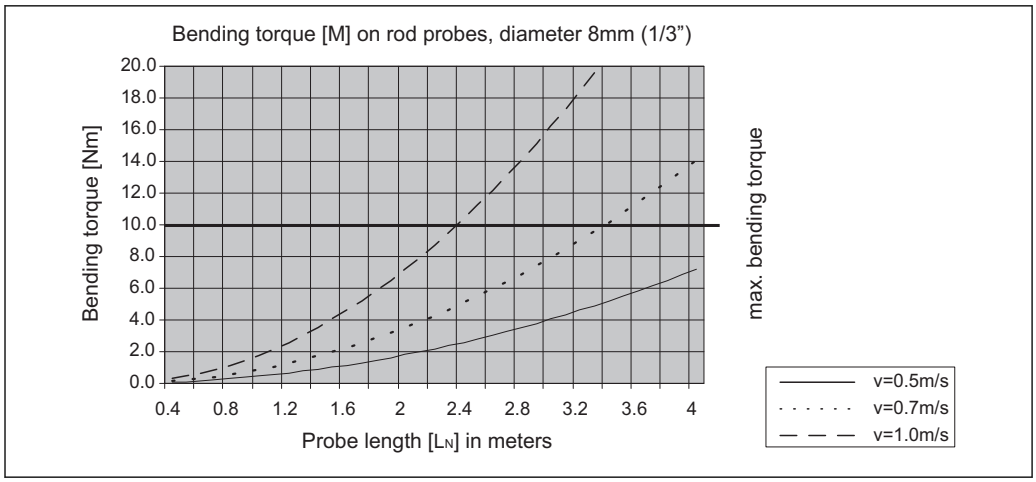

A0014182-EN

Bending strength of coax probes

Sensor	Feature 060	Process connection	Probe	Bending strength [Nm]
FMP51	UA, UB	Thread G¾ oder NPT¾	Coax 316L, Ø 21,3 mm	60
		▪ Thread G1½ or NPT1½ ▪ Flange	Coax 316L, Ø 42,4 mm	300
	UC, UD	Flange	Coax AlloyC, Ø 42,4 mm	300
FMP54	UA, UB	▪ Thread G1½ or NPT1½ ▪ Flange	Coax 316L, Ø 42,4 mm	300

Notes on the process connection

Probes are mounted to the process connection with threaded connections or flanges. If during this installation there is the danger that the probe end moves so much that it touches the tank floor or cone at times, the probe must, if necessary, be shortened and fixed down → 📄 55.

Threaded connection

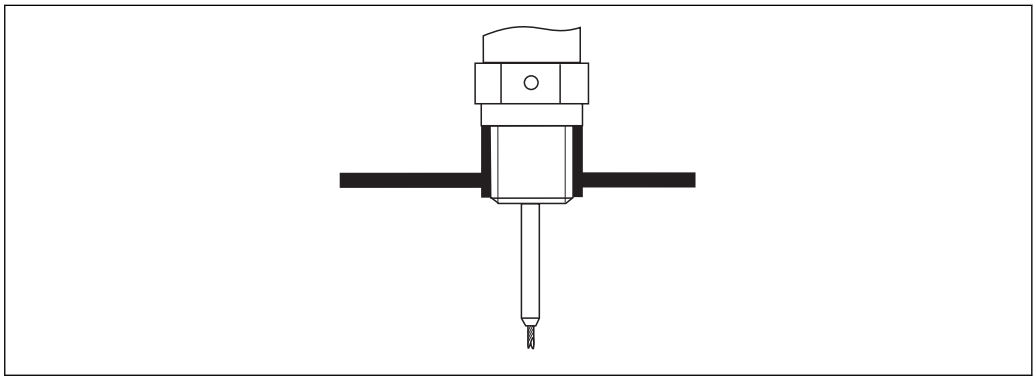

18 Mounting with threaded connection; flush with the container ceiling

Seal

The thread as well as the type of seal comply to DIN 3852 Part 1, screwed plug form A.

They can be sealed with the following types of sealing rings:

- Thread G3/4": According to DIN 7603 with the dimensions 27 x 32 mm
- Thread G1-1/2": According to DIN 7603 with the dimensions 48 x 55 mm

Please use a sealing ring according to this standard in the form A, C or D and of a material that is resistant to the application.

For the length of the screwed plug refer to the dimensional drawing:
- FMP51: → 📄 80
- FMP54: → 📄 83

Nozzle mounting

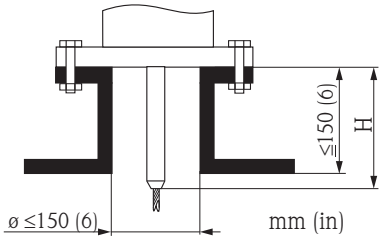

A0015122

- Permissible nozzle diameter: ≤ 150 mm (6 in).
  For larger diameters the near range measuring capability may be reduced.
  For nozzles ≥ DN300: → 📄 53.
- Permissible nozzle height [7]: ≤ 150 mm (6 in).
  For a larger height the near range measuring capability may be reduced.
  Larger nozzle heights may be possible in special cases (see sections "Center rod for FMP51 and FMP52" and "Rod extension/centering HMP40 for FMP54").

With thermally insulated vessels the nozzle should also be insulated in order to prevent condensate formation.

7) Larger nozzle heights on request

Center rod for FMP51 and FMP52

For rope probes it may be necessary to use a version with center rod in order to prevent the probe rod from coming into contact with the nozzle wall. Probes with center rod are available for FMP51 and FMP52.

Probe	Max. nozzle height (= length of the center rod)	Option to be selected in feature 060 ("Probe")
FMP51	150 mm	LA
	6 inch	LB
	300 mm	MB
	12 inch	MD
FMP52	150 mm	OA
	6 inch	OC
	300 mm	OB
	12 inch	OD

Rod extension/centering HMP40 for FMP54

For FMP54 with rope probes the rod extension/centering HMP 40 is available as an accessory → 🗎 117. It has to be used if otherwise the probe rope comes into contact with the lower edge of the nozzle.

For FMP54 with rope probes the rod extension/centering HMP 40 is available as an accessory. It has to be used if otherwise the probe rope comes into contact with the lower edge of the nozzle.

This accessory consists of the extension rod corresponding to the nozzle height, on which a centering disk is also mounted if the nozzles are narrow or when working in bulk solids. This component is delivered separately from the device. Please order the probe length correspondingly shorter.

Centering disks with small diameters (DN40 and DN50) may only be used if there is no significant build-up in the nozzle above the disk. The nozzle must not become clogged by the product.

Installation in nozzles ≥ DN300

If installation in ≥ 300mm/12" nozzles is unavoidable, installation must be carried out in accordance with the following sketch.

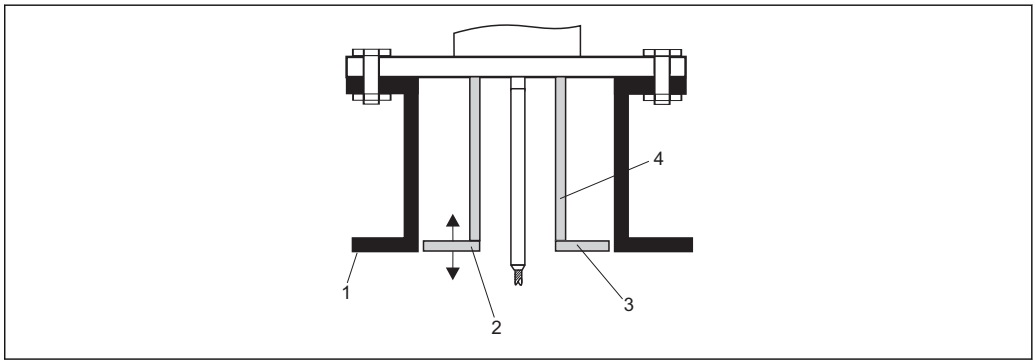

A0014199

1 *Lower edge of the nozzle*
2 *Approx. flush with the lower edge of the nozzle (± 50 mm/2")*
3 *Plate*
4 *Pipe Φ 150 to 180 mm (6 to 7 inch)*

Nozzle diameter	Plate diameter
300 mm (12")	280 mm (11")
≥ 400 mm (16")	≥ 350 mm (14")

Mounting cladded flanges

For cladded flanges of FMP52, observe the following:
- Use flange screws according to the number of flange holes.
- Tighten the screws with the required torque (see table).
- Retighten the screws after 24 hours or after the first temperature cycle.
- Depending on process pressure and process temperature check and retighten the screws at regular intervals.

Flange size	Number of screws	Recommended torque [Nm]	
		minimum	maximum
EN			
DN40/PN40	4	35	55
DN50/PN16	4	45	65
DN50/PN40	4	45	65
DN80/PN16	8	40	55
DN80/PN40	8	40	55
DN100/PN16	8	40	60
DN100/PN40	8	55	80
DN150/PN16	8	75	115
DN150/PN40	8	95	145
ASME			
1½"/150lbs	4	20	30
1½"/300lbs	4	30	40
2"/150lbs	4	40	55
2"/300lbs	8	20	30
3"/150lbs	4	65	95
3"/300lbs	8	40	55
4"/150lbs	8	45	70
4"/300lbs	8	55	80
6"/150lbs	8	85	125
6"/300lbs	12	60	90
JIS			
10K 40A	4	30	45
10K 50A	4	40	60
10K 80A	8	25	35
10K 100A	8	35	55
10K 100A	8	75	115

Securing the probe

Securing rope probes

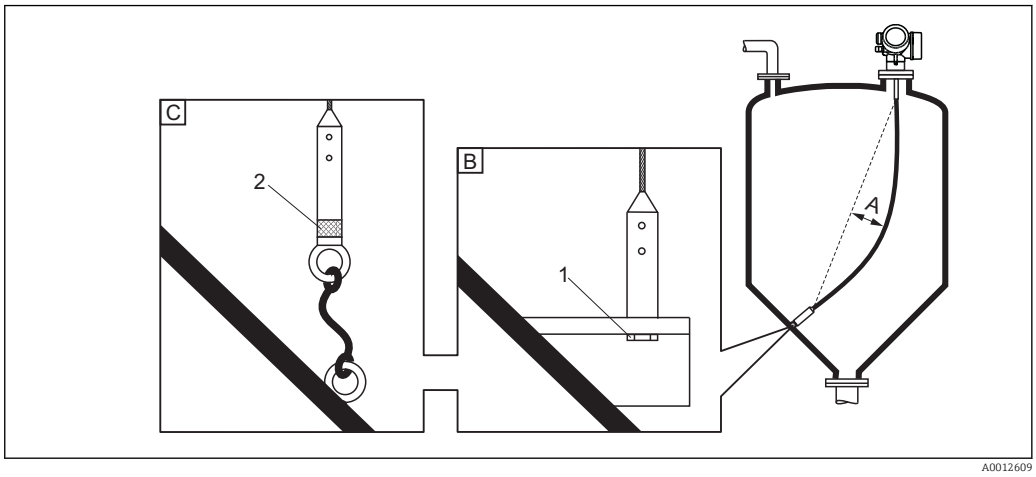

A Sag of the rope: ≥ 1 cm per 1m of the probe length (0.12 inch per 1 ft of the probe length)
B Reliably grounded end of probe
C Reliably isolated end of probe
1: Mounting and contact with a bolt
2 Mounting kit isolated

- The end of the probe needs to be secured under the following conditions:
  if otherwise the probe sporadically comes into contact with the wall of the vessel, the outlet cone, internal fittings or other parts of the installation.
- The end of probe can be secured at its internal thread
  rope 4 mm (1/6"), 316: M 14
- The fixing must be either reliably grounded or reliably insulated. If it is not possible to mount the probe weight with a reliably insulated connection, it can be secured using an isolated eyelet, which is available as an accessory.
- In order to prevent an extremely high tensile load (e.g. due to thermal expansion) and the risk of rope crack, the rope has to be slack. Make the rope longer than the required measuring range such that there is a sag in the middle of the rope that is ≥ 1cm/(1 m rope length) [0.12 inch/(1 ft rope length)].
  Tensile load limit of rope probes: → 📄 47

Securing rod probes

- For WHG approvals: For probe lengths ≥ 3 m (10 ft) a support is required.
- In general, rod probes must be supported if there is a horizontal flow (e.g. from an agitator) or in the case of strong vibrations.
- Rod probes may only be supported at the end of the probe.

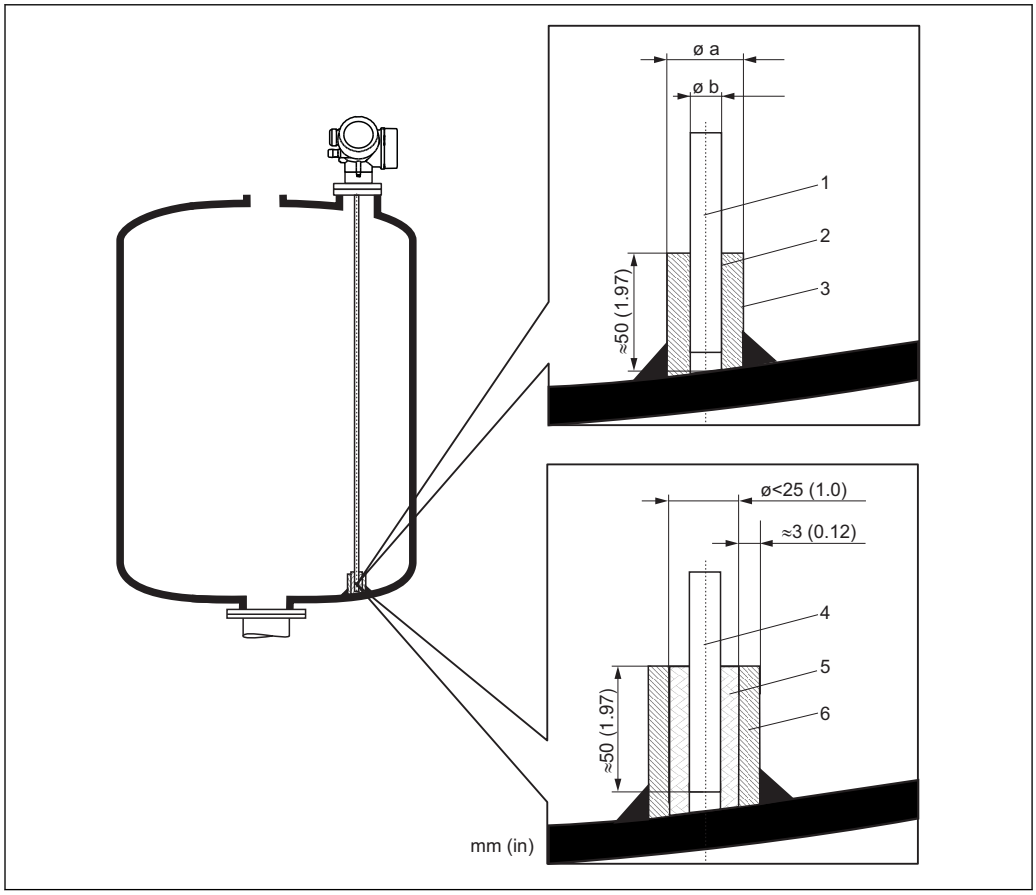

A0012607

1 *Probe rod, uncoated*
2 *Sleeve bored tight to ensure electrical contact between the rod and sleeve!*
3 *Short metal pipe, e.g. welded in place*
4 *Probe rod, coated*
5 *Plastic sleeve, e.g. PTFE, PEEK or PPS*
6 *Short metal pipe, e.g. welded in place*

Φ probe	Φ a [mm (inch)]	Φ b [mm (inch)]
8 mm (1/3")	< 14 (0.55)	8.5 (0.34)
12 mm (1/2")	< 20 (0.78)	12.5 (0.52)
16 mm (0.63in)	< 26 (1.02)	16.5 (0.65)

NOTICE

Poor grounding of the end of probe may cause measuring errors.

▶ Apply a narrow sleeve which has good electrical contact to the probe.

NOTICE

Welding may damage the main electronics module.

▶ Before welding: Ground the probe and dismount electronics.

Securing coax probes

For WHG approvals: For probe lengths ≥ 3 m (10 ft) a support is required.

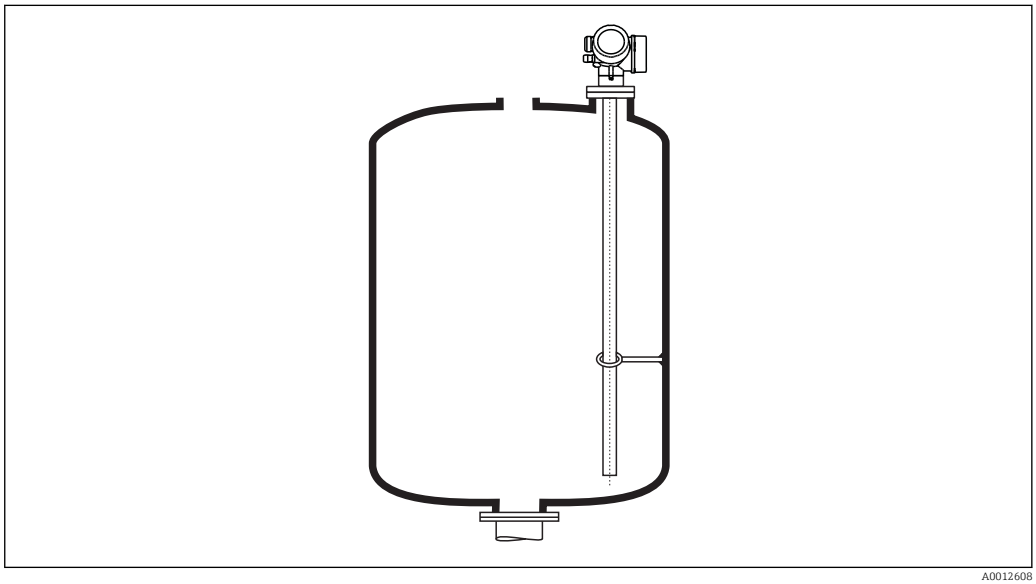

A0012608

Coax probes can be supported at any point of the outer tube.

Special mounting conditions

Bypasses and stilling wells

In bypass and stilling well applications it is recommended to use a centering disks or stars.

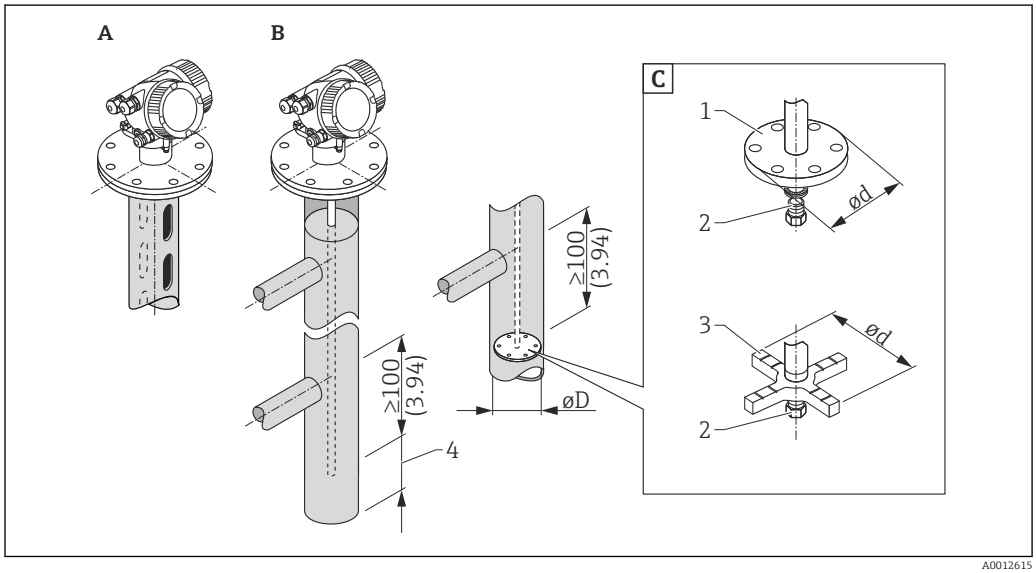

19 Dimensions: mm (in)

A Mounting in a stilling well
B Mounting in a bypass
C Center washer or centering star
1 Metallic center washer (316L) for level measurement
2 Fixing screw; torque: 25 Nm ± 5 Nm
3 Non-metallic centering star (PEEK, PFA) for interface measurement
4 Minimum distance between end of probe and lower edge of the bypass; see table below

Allocation of probe type and center washer or centering star to pipe diameter

Feature 610 - Accessory mounted					
Application	Option	Type of probe	Center washer Centering star		Pipe
			Φ d [mm (in)]	Material	Φ D [mm (in)]
Level measurement	OA	Rod probe	75 (2,95)	316L	DN80/3" to DN100/4"
	OB	Rod probe	45 (1,77)	316L	DN50/2" to DN65/2½"
	OC	Rope probe	75 (2,95)	316L	DN80/3" to DN100/4"
Interface measurement	OD	Rod probe	48...95 (1,89...3,74)	PEEK	≥ 50 mm (2")
	OE	Rod probe	37 (1,46)	PFA	≥ 40 mm (1.57")

Minimum distance between end of probe and lower edge of the bypass

Type of probe	Minimum distance
Rope	150 mm (6 in)
Rod	10 mm (0.4 in)
Coax	10 mm (0.4 in)

- Pipe diameter: > 40 mm (1.6") for rod probes
- Rod probe installation can take place up to a diameter size of 150 mm (6 in). In the event of larger diameters, a coax probe is recommended.
- Side disposals, holes or slits and welded joints that protrude up to approx. 5 mm (0.2") inwards do not influence the measurement.
- The pipe may not exhibit any steps in diameter.
- The probe must be 100 mm longer than the lower disposal.
- Within the measuring range, the probe must not get into contact with the pipe wall. If necessary, secure the probe by retaining or tensioning. All rope probes are prepared for tensioning in containers (tensioning weight with anchor hole).
- If a metallic center washer is mounted at the end of the probe, it enables a reliable recognition of the end-of-probe signal (see feature 610 of the product structure).
  Note: For interface measurements only use the nonmetallic centering star made of PEEK or PFA (feature 610, options OD or OE).
- Coax probes can always be applied if there is enough mounting space.

For bypasses with condensate formation (water) and a medium with low dielectric constant (e.g. hydrocarbons):

In the course of time the bypass is filled with condensate up to the lower disposal and for low levels the the level echo is superimposed by the condensate echo. Thus in this range the condensate level is measured instead of the correct level. Only higher levels are measured correctly. To prevent this, position the lower disposal 100 mm (4 in) below the lowest level to be measured and apply a metallic centering disk at the height of the lower edge of the lower disposal.

With heat insulated tanks the bypass should also be insulated in order to prevent condensate formation.

For information on bypass solutions from Endress+Hauser please contact your Endress+Hauser sales representative.

Installation in horizontal and upright cylindrical tanks

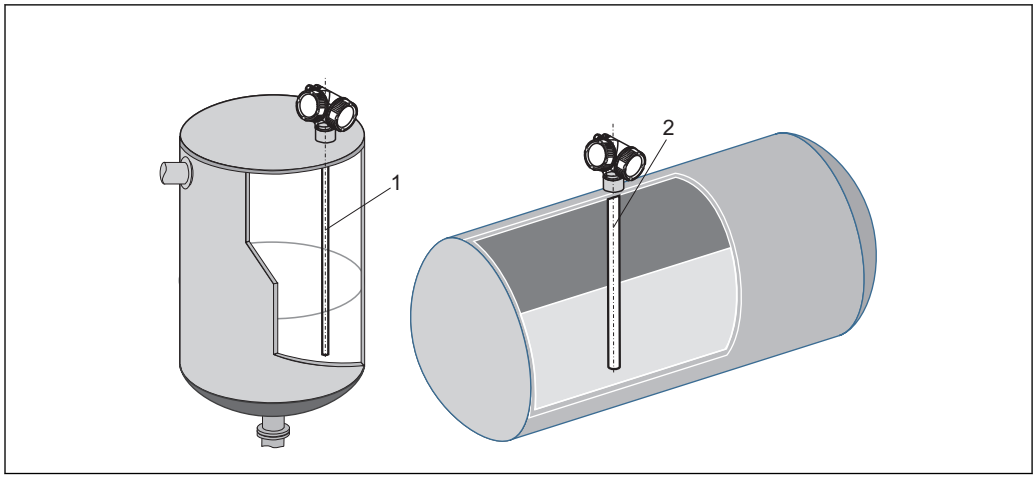

A0014141

- Any distance from wall, as long as occasional contact is prevented.
- When installing in tanks with a lot of internals or internals situated close to the probe: use a coax probe.

Underground tanks

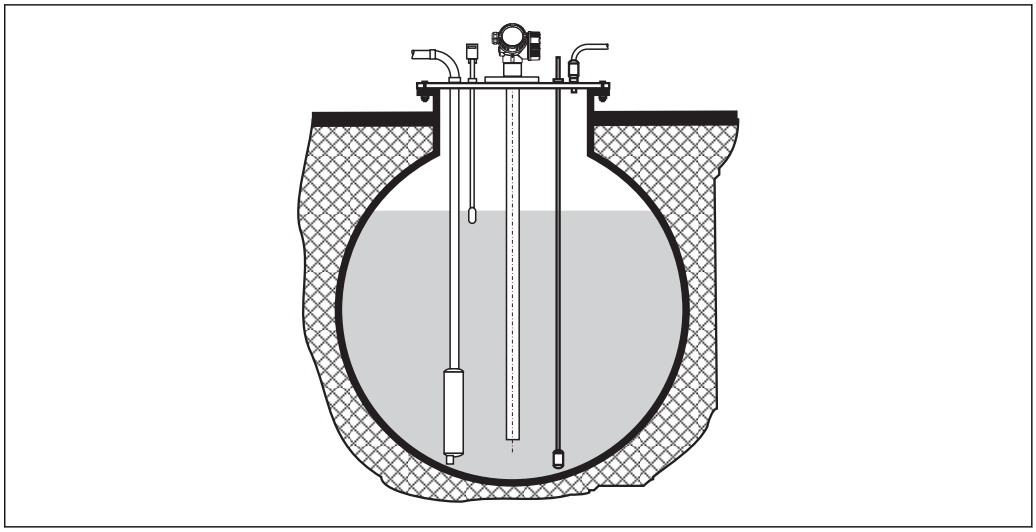

A0014142

Use a coax probe for nozzles with large diameters in order to avoid reflections at the nozzle wall.

Installation at an angle

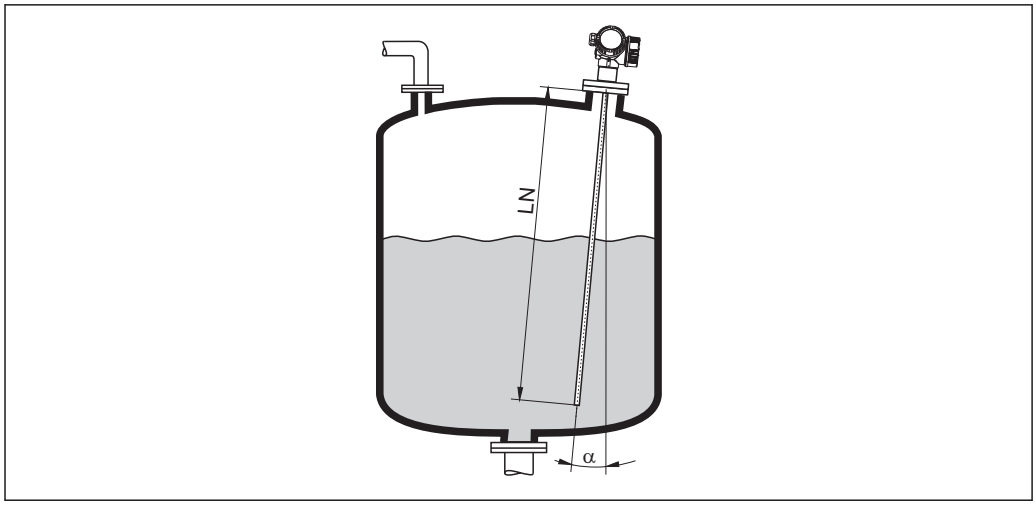

A0014145

- For mechanical reasons, the probe should be installed as vertically as possible.
- With inclined installations the probe length has to be adjusted in dependence to the installation angle.
  - Up to LN = 1 m (3.3 ft): α = 30°
  - Up to LN = 2 m (6.6 ft): α = 10°
  - Up to LN = 4 m (13.1 ft): α = 5°

Non-metallic vessels

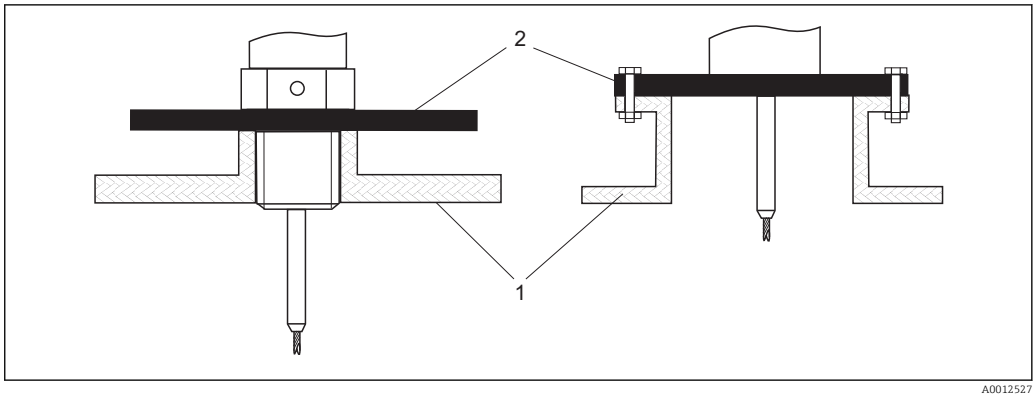

1 Non-metallic vessel
2 Metal sheet or metal flange

To measure, Levelflex with a rod probe needs a metallic surface at the process connection. Therefore:

- Select an instrument version with metal flange (minimum size DN50/2").
- Or: mount a metal sheet with a diameter of at least 200 mm (8") to the probe at the process connection. Its orientation must be perpendicular to the probe.

No additional measures are required for coax probes.

Plastic or glass tanks: Mounting the probe externally at the wall

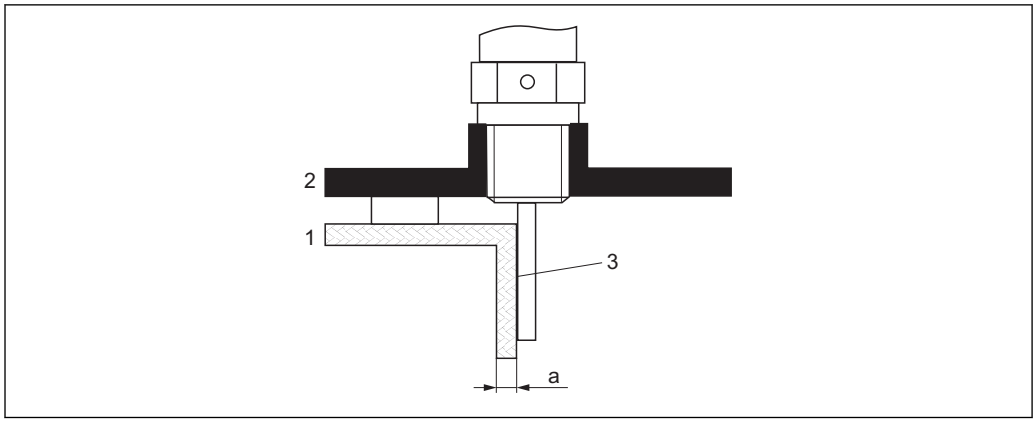

1 Plastic or glass tank
2 Metall sheet with threaded sleeve
3 No free space between tank wall and probe!

Requirements

- The dielectric constant of the medium must be at least DC > 7.
- The tank wall must be non-conductvie.
- Maximum wall thickness (a):
  - Plastic: < 15 mm (0.6")
  - Glass: < 10 mm (0.4")
- There may be no metallic reinforcements fixed to the tank.

Mounting conditions:

- The probe must be mounted directly to the tank wall (no open space)
- A plastic half pipe with a diameter of approx. 200 mm (8"), or some other protective unit, must be affixed externally to the probe to prevent any influences on the measurement.
- If the tank diameter is less than 300 mm (12"):
  A metallic grounding sheet must be installed at the opposite side of the tank. The sheet must be conductively connected to the process connection and cover about the half of the vessel's circumference.
- If the tank diameter exceeds 300 mm (12"):
  A metal sheet with a diameter of at least 200 mm (8") must be mounted to the probe at the process connection. Its orientation must be perpendicular to the probe (see above).

Vessels with heat insulation

If process temperatures are high, the device must be included in normal tank insulation to prevent the electronics heating up as a result of heat radiation or convection. The insulation may not exceed beyond the points labeled "MAX" in the drawings.

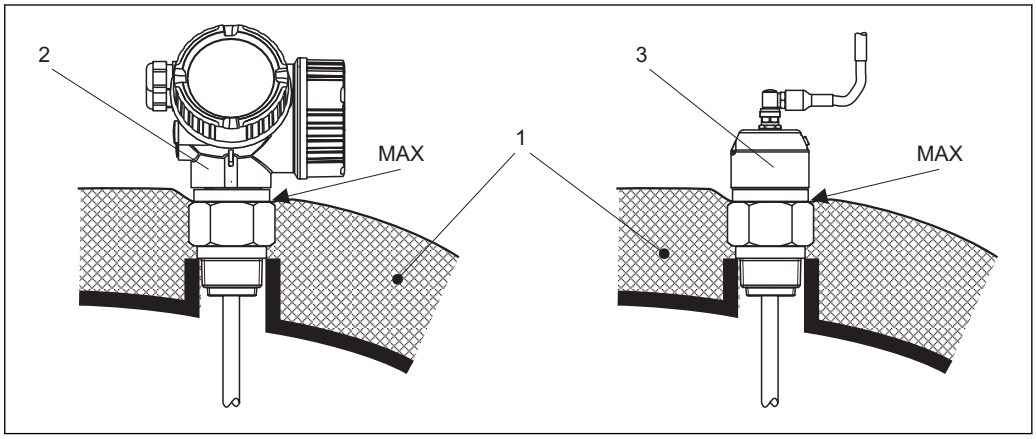

20 Process connection with thread - FMP51

1 Tank insulation
2 Compact device
3 Sensor remote (feature 600)

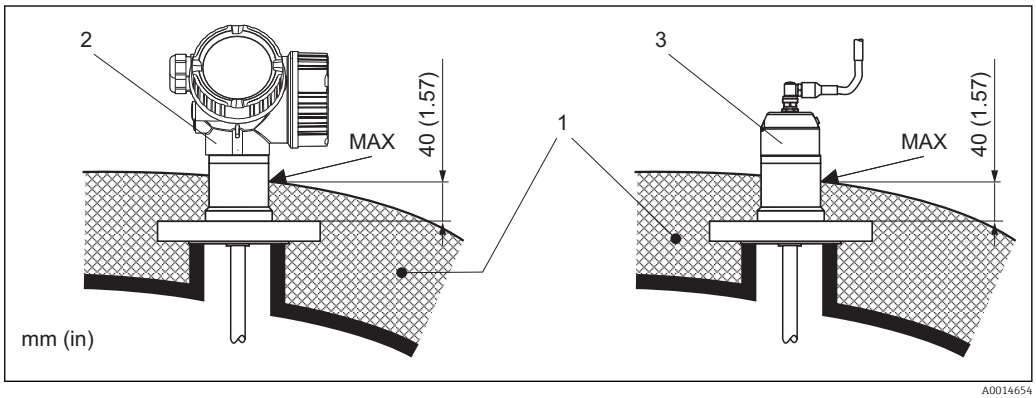

21 Process connection with flange - FMP51, FMP52

1 Tank insulation
2 Compact device
3 Sensor remote (feature 600)

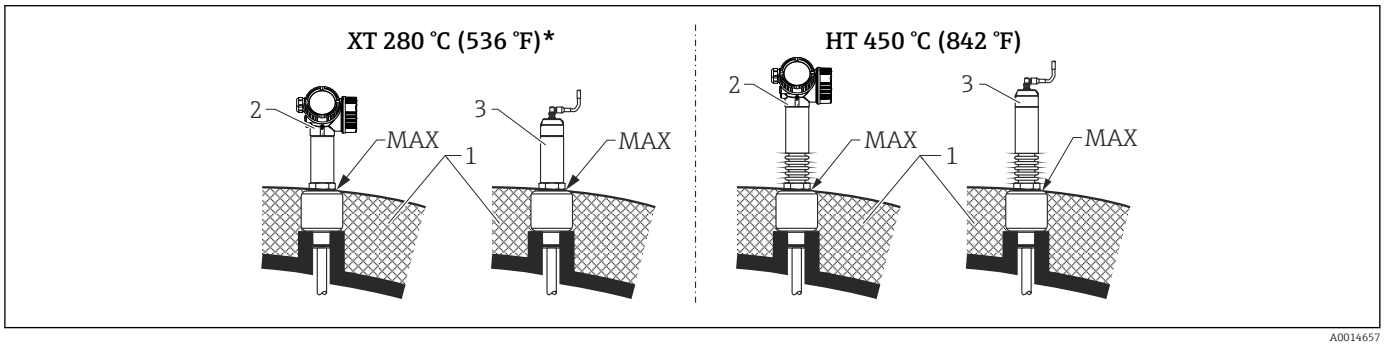

22 Process connection with thread - FMP54, sensor version XT and HT

1 Tank insulation
2 Compact device
3 Sensor remote (feature 600)
** The XT version is not recommended for saturated steam above 200 °C (392 °F). Use the HT version instead.*

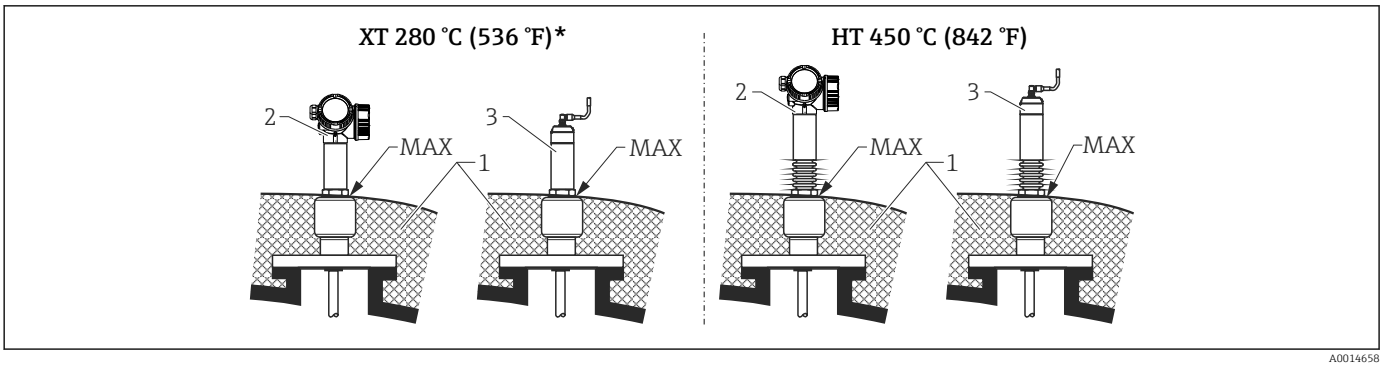

23 Process connection with flange - FMP54, sensor version XT and HT

1 Tank insulation
2 Compact device
3 Sensor remote (feature 600)
** The XT version is not recommended for saturated steam above 200 °C (392 °F). Use the HT version instead.*

Replacing a displacer system in an existing displacer chamber

FMP51 and FMP54 are a perfect replacement for a conventional displacer system in an existing displacer chamber. Endress+Hauser offers flanges that suit Fischer and Masoneilan displacer chamber for this purpose (special product for FMP51; feature 100, options LNJ, LPJ, LQJ for FMP54). Thanks to menu-guided local operation, commissioning the Levelflex only takes a few minutes. Replacement is also possible when partially filled, and wet calibration is not required.

Your benefits:
- No moving parts, thus zero-maintenance operation.
- Not sensitive to process influences such as temperature, density, turbulence and vibrations.
- The rod probes can be shortened or replaced easily. In this way, the probe can be easily adjusted on site.

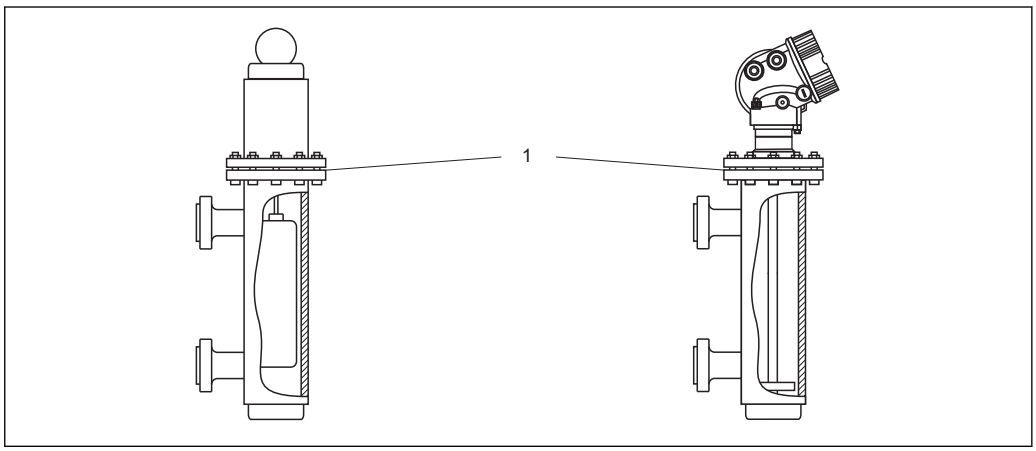

A0014153

1 Flange of the displacer chamber

Planning instructions:
- In normal cases, use a rod probe. When installing into a metallic displacer chamber up to 150 mm, you have all the advantages of a coax probe.
- It must be ensured that the probe does not come into contact with the side wall. Where necessary, use a center washer or centering star at the lower end of the probe (feature 610 of the product structure).
- The center washer or centering star must be adapted as accurately as possible to the internal diameter of the displacer chamber to also ensure perfect operation in the area of the probe end.

Additional information on interface measurement
- In the case of oil and water the centering disk or centering star should be positioned at the lower edge of the lower disposal (water level).
- The pipe may not exhibit any steps in diameter. Use the coax probe where necessary.
- In the case of rod probes, it must be ensured that the probe does not come into contact with the wall. If necessary, use a center washer or centering star at the end of the probe.
- A plastic centering star has to be used for interface measurement (feature 610, options OD and OE).

Operating conditions: Environment

Ambient temperature range

Measuring device	−40 to +80 °C (−40 to +176 °F)
Local display	−20 to +70 °C (−4 to +158 °F), the readability of the display may be impaired at temperatures outside the temperature range.
Connection cable (for "Probe Design" = "Sensor remote")	max. 100 °C (212 °F)
Remote display FHX50	−40 to 80 °C (−40 to 176 °F)

When operating the device in the open with strong sunlight:
- Mount the device in a shady position.
- Avoid direct sunlight, especially in warmer regions.
- Use a weather protection cover (see accessories).

Ambient temperature limits

The following diagrams take into account only function requirements. There may be further restrictions for certified device versions. Please refere to the separate Safety Instructions → 🗎 126.

With a temperature (T_p) at the process connection the admissible ambient temperature (T_a) is reduced according to the following diagram (temperature derating):

Temperature derating for FMP51 with threaded connection G¾ or NPT¾

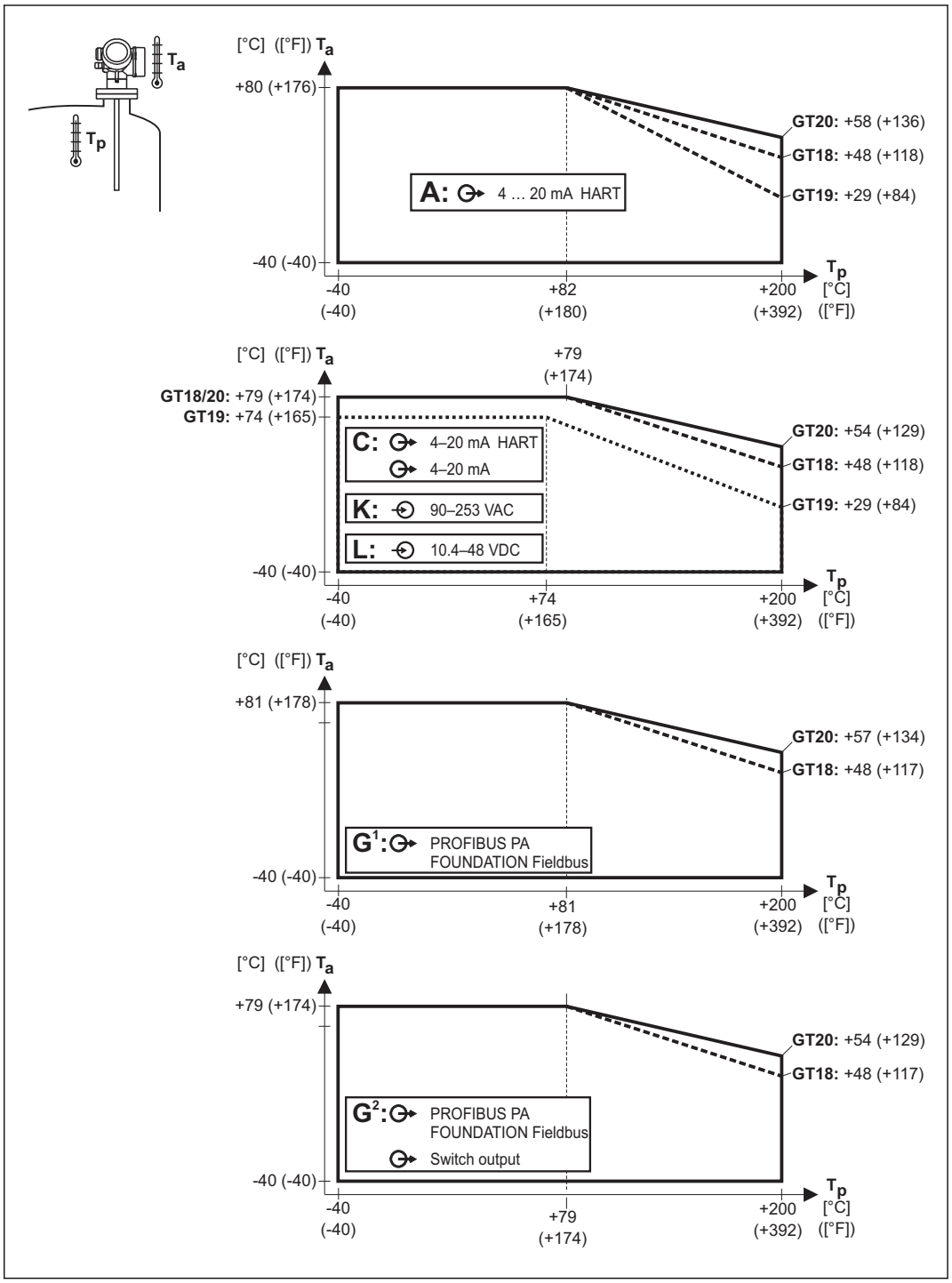

GT18 = stainless steel housing
GT19 = plastic housing
GT20 = aluminum housing

A = 1 current output
C = 2 current outputs
G^1, G^2 = PROFIBUS PA [1)]
K, L = 4-wire

T_a = ambient temperature
T_p = temperature at the process connection [2)]

1) For PROFIBUS PA and FOUNDATION Fieldbus the temperature derating depends on the usage of the switch output. (G^1: switch output not connected; G2: switch output connected).
2) For saturated steam applications the process temperature should not exceed 150 °C (302 °F). For higher process temperatures use FMP54.

Temperature derating for FMP51 with threaded connection G1½ or NPT1½

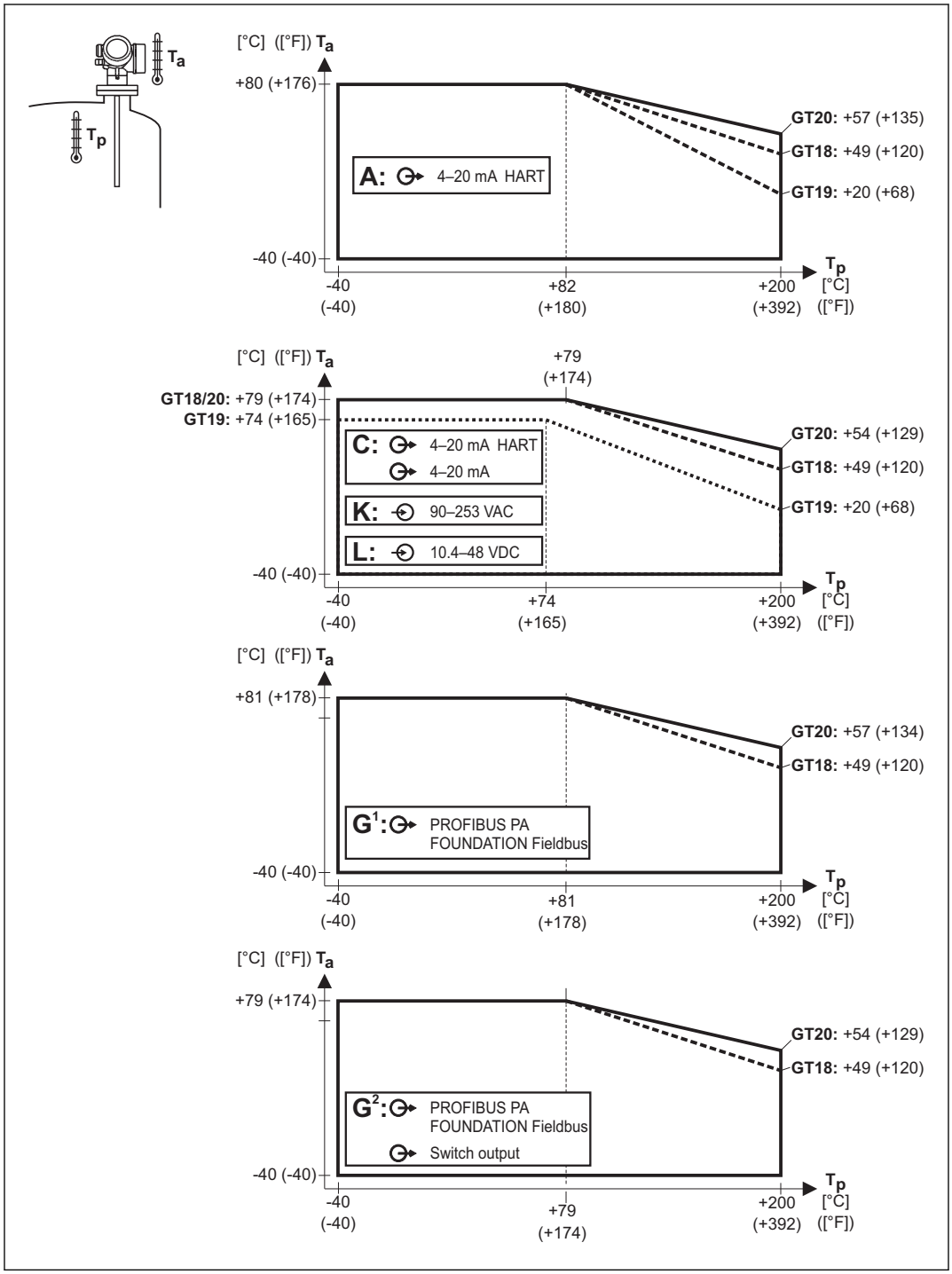

GT18 = stainless steel housing
GT19 = plastic housing
GT20 = aluminum housing

A = 1 current output
C = 2 current outputs
G1, G2 = PROFIBUS PA [1)]
K, L = 4-wire

T_a = ambient temperature
T_p = temperature at the process connection [2)]

1) For PROFIBUS PA and FOUNDATION Fieldbus the temperature derating depends on the usage of the switch output. (G1: switch output not connected; G2: switch output connected).
2) For saturated steam applications the process temperature should not exceed 150 °C (302 °F). For higher process temperatures use FMP54.

Temperature derating for FMP51 with flange

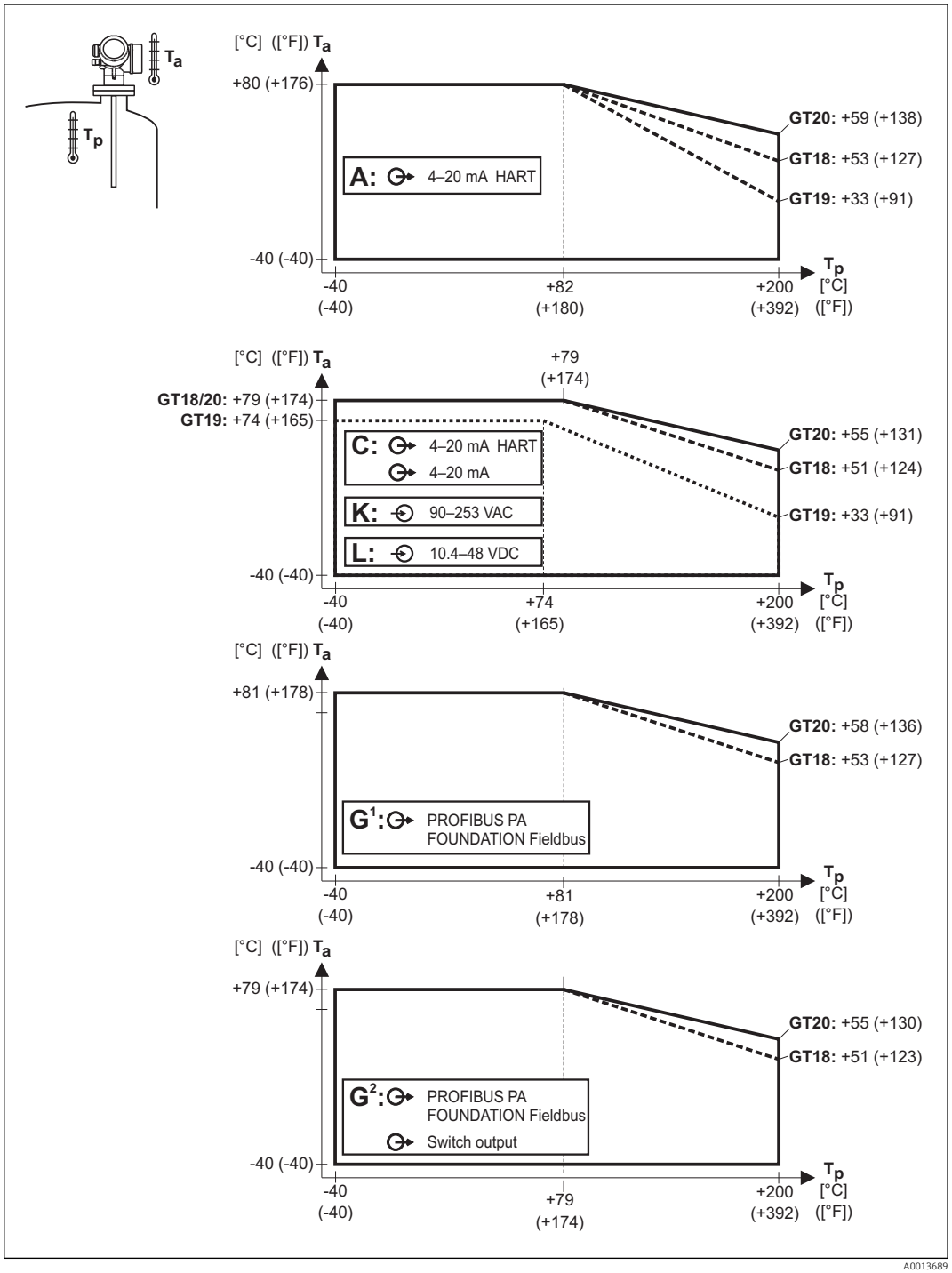

GT18 = stainless steel housing
GT19 = plastic housing
GT20 = aluminum housing

A = 1 current output
C = 2 current outputs
G^1, G^2 = PROFIBUS PA [1)]
K, L = 4-wire

T_a = ambient temperature
T_p = temperature at the process connection [2)]

1) For PROFIBUS PA and FOUNDATION Fieldbus the temperature derating depends on the usage of the switch output. (G^1: switch output not connected; G2: switch output connected).
2) For saturated steam applications the process temperature should not exceed 150 °C (302 °F). For higher process temperatures use FMP54.

Temperature derating for FMP52

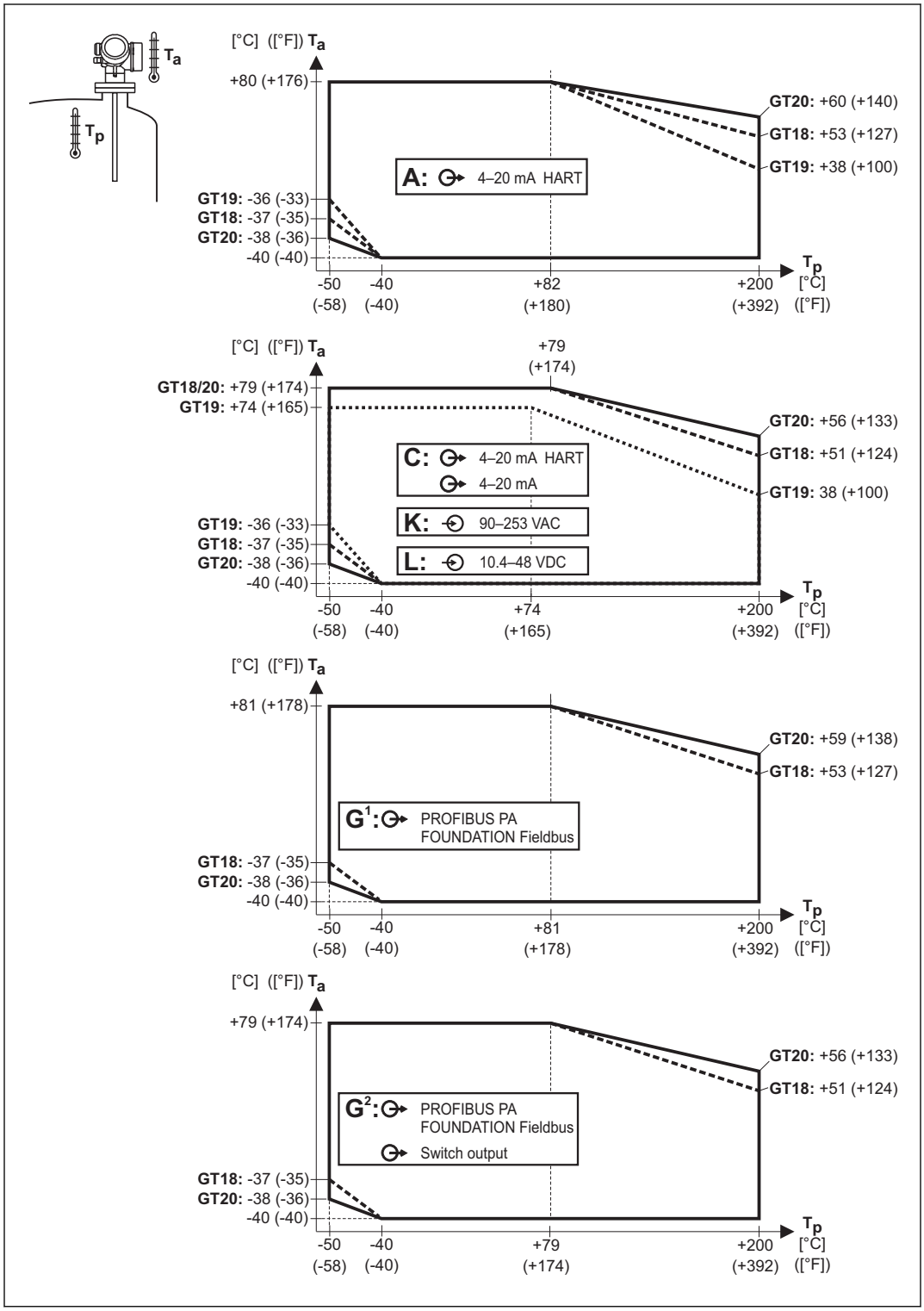

GT18 = stainless steel housing
GT19 = plastic housing
GT20 = aluminum housing

A = 1 current output
C = 2 current outputs
G^1, G^2 = PROFIBUS PA [1)]
K, L = 4-wire

T_a = ambient temperature
T_p = temperature at the process connection [2)]

1) For PROFIBUS PA and FOUNDATION Fieldbus the temperature derating depends on the usage of the switch output. (G^1: switch output not connected; G2: switch output connected).
2) For saturated steam applications the process temperature should not exceed 150 °C (302 °F). For higher process temperatures use FMP54.

Temperature derating for FMP54 - version XT up to +280 °C (+536 °F)

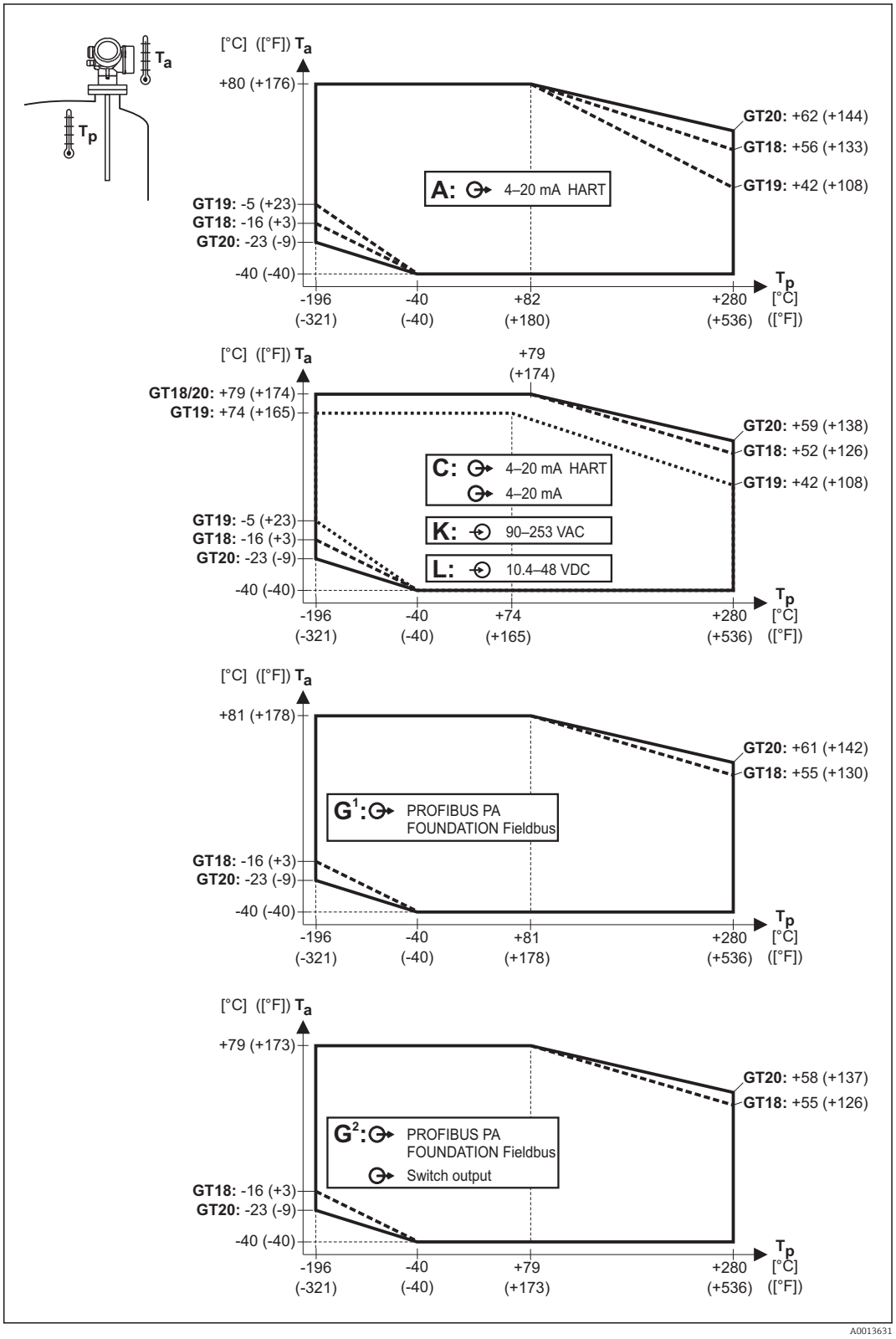

GT18 = stainless steel housing
GT19 = plastic housing
GT20 = aluminum housing

A = 1 current output
C = 2 current outputs
G1, G2 = PROFIBUS PA [1)]
K, L = 4-wire

T_a = ambient temperature
T_p = temperature at the process connection [2)]

1) For PROFIBUS PA and FOUNDATION Fieldbus the temperature derating depends on the usage of the switch output. (G1: switch output not connected; G2: switch output connected).
2) For saturated steam applications the process temperature should not exceed 200 °C (392 °F). For higher process temperatures use the HT version.

Temperature derating for FMP54 - version HT up to +450 °C (+842 °F)

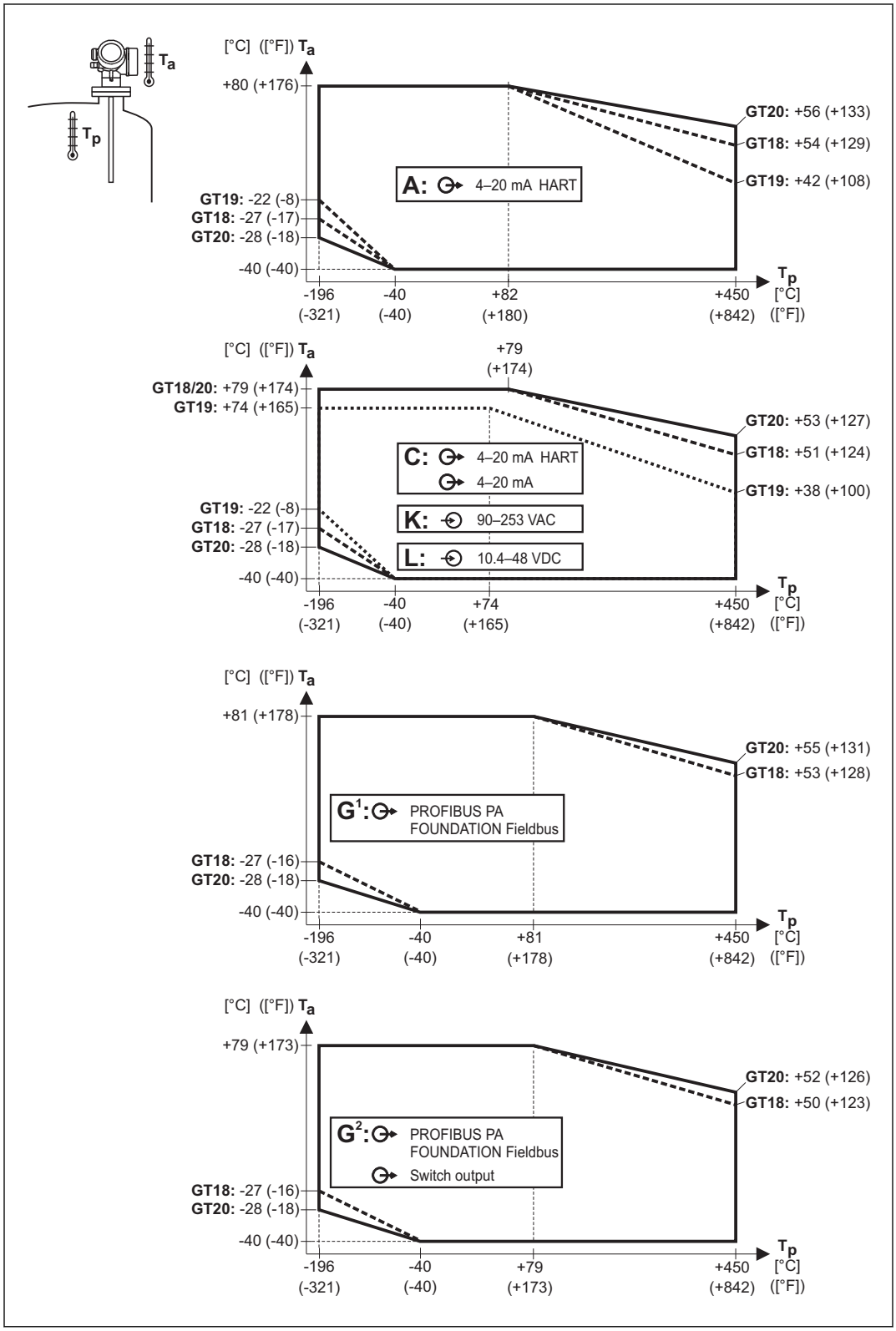

GT18 = stainless steel housing
GT19 = plastic housing
GT20 = aluminum housing

A = 1 current output
C = 2 current outputs
G^1, G^2 = PROFIBUS PA [1)]
K, L = 4-wire

T_a = ambient temperature
T_p = temperature at the process connection

1) For PROFIBUS PA and FOUNDATION Fieldbus the temperature derating depends on the usage of the switch output. (G^1: switch output not connected; G2: switch output connected).

Storage temperature	−40 to +80 °C (−40 to +176 °F)
Climate class	DIN EN 60068-2-38 (test Z/AD)
Altitude according to IEC61010-1 Ed.3	Up to 2 000 m (6 600 ft) above MSL.
Degree of protection	▪ With closed housing tested according to: – IP68, NEMA6P (24 h at 1.83 m under water surface) [8)] – For plastic housing with transparent cover (display module): IP68 (24 h at 1.00 m under water surface) [9)] – IP66, NEMA4X ▪ With open housing: IP20, NEMA1 ▪ Display module: IP22, NEMA2 Degree of protection IP68 NEMA6P applies for M12 PROFIBUS PA plugs only when the PROFIBUS cable is plugged in and is also rated IP68 NEMA6P.
Vibration resistance	DIN EN 60068-2-64 / IEC 60068-2-64: 20 to 2 000 Hz, 1 $(m/s^2)^2/Hz$
Cleaning the probe	Depending on the application, contamination or buildup can accumulate on the probe. A thin, even layer only influences measurement slightly. Thick layers can dampen the signal and then reduce the measuring range. Severe, uneven buildup, adhesion e.g. through crystallization, can lead to incorrect measurement. In this case, we recommend that you use a non-contact measuring principle, or check the probe regularly for soiling.
Electromagnetic compatibility (EMC)	Electromagnetic compatibility to all relevant requirements of the EN 61326- series and NAMUR recommendation EMC (NE21). For details see declaration of conformity. [10)]. If only the analogue signal is used, unshielded interconnection lines are sufficient for the installation. In case of using the digital signal (HART/ PA/ FF) use shielded interconnection lines. Use a shielded cable when working with a digital communications signal. Max. fluctuations during EMC- tests: < 0.5 % of the span. When installing the probes in metal and concrete tanks and when using a coax probe: ▪ Interference emission to EN 61326 - x series, electrical equipment Class B. ▪ Interference immunity to EN 61326 - x series, requirements for industrial areas and NAMUR Recommendation NE 21 (EMC) The measured value can be affected by strong electromagnetic fields when installing rod and rope probes without a shielding/metallic wall, e.g. in plastic and wooden silos. ▪ Interference emission to EN 61326 - x series, electrical equipment Class A. ▪ Interference immunity: the measured value can be affected by strong electromagnetic fields.

8) also valid for the "Sensor remote" version
9) This restriction is valid if the following options of the product structure have been selected at the same time: 030("Display, Operation") = C("SD02") or E("SD03"); 040("Housing") = A("GT19").
10) Can be downloaded from www.endress.com.

Process

Process temperature range

The maximum permitted temperature at the process connection is determined by the O-ring version ordered:

Device	O-ring material	Process temperature	Approval
FMP51	FKM (Viton GLT 37559)	−30 to +150 °C (−22 to +302 °F)	
		−40 to +150 °C (−40 to +302 °F) only in combination with feature 610 "Accessory Mounted" option model NC "Gas-tight feed through"	
	EPDM (70C4 pW FKN or E7515)	−40 to +120 °C (−40 to +248 °F)	
	FFKM (Kalrez 6375) [1]	−20 to +200 °C (−4 to +392 °F) [2]	
FMP52	—	−50 to +200 °C (−58 to +392 °F); completely coated	FDA, 3A, EHEDG, USP Cl. VI [3]
FMP54	Graphite	Version XT: −196 to +280 °C (−321 to +536 °F) [4]	
		Version HT: −196 to +450 °C (−321 to +842 °F)	

1) Recommended for steam applications
2) Not recommended for saturated steam above 150 °C (302 °F). Use FMP54 instead.
3) Plastic parts in contact with process have been tested according to USP <88> Class VI-70°C.
4) Not recommended for saturated steam above 200 °C (392 °F). Use the HT version instead.

With uncoated probes, the medium temperature may be higher, under the condition that the maximum process temperature specified in the table above is not exceeded at the process connection.

However, when using rope probes, the stability of the probe rope is reduced by structural changes at temperatures above 350 °C (662 °F).

Process pressure range

Device	Process pressure
FMP51	−1 to 40 bar (−14.5 to 580 psi)
FMP52	−1 to 40 bar (−14.5 to 580 psi)
FMP54	−1 to 400 bar (−14.5 to 5800 psi)

FMP54 - process pressure depending on the process temperature

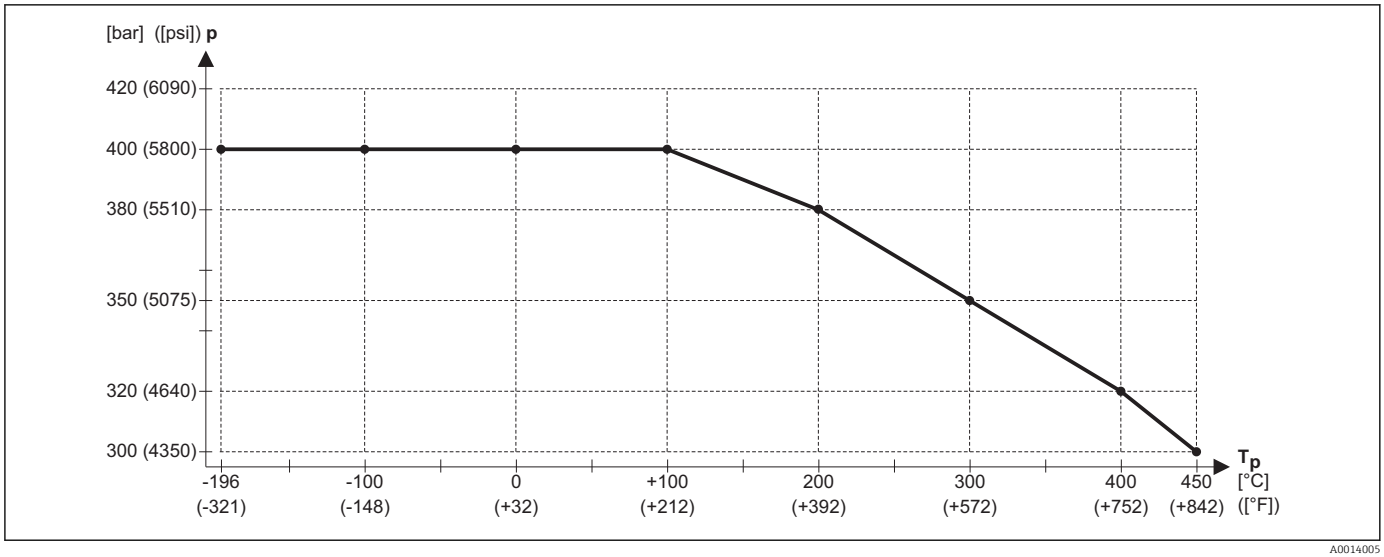

p = process pressure *T_p = process temperature*

This range may be reduced by the selected process connection. The pressure rating (PN) specified on the flanges refers to a reference temperature of 20 °C, for ASME flanges 100 °F. Pay attention to pressure-temperature dependencies.

Please refer to the following standards for the pressure values permitted for higher temperatures:

- EN 1092-1: 2001 Tab. 18
  With regard to their temperature stability properties, the materials 1.4435 and 1.4404 are grouped under 13E0 in EN 1092-1 Tab. 18. The chemical composition of the two materials can be identical.
- ASME B 16.5a - 1998 Tab. 2-2.2 F316
- ASME B 16.5a - 1998 Tab. 2.3.8 N10276
- JIS B 2220

Dielectric constant (DC)

- Coax probes: DC (ε_r) ≥ 1.4
- Rod and rope probe: DC (ε_r) ≥ 1.6 (when installing in pipes DN ≤ 150 mm (6 in): DC (ε_r) ≥ 1.4)

Expansion of the rope probes through temperature

Elongation through temperature increase from 30 °C (86 °F) to 150 °C (302 °F): 2 mm / m rope length

Mechanical construction

Dimensions

Dimensions of the electronics housing

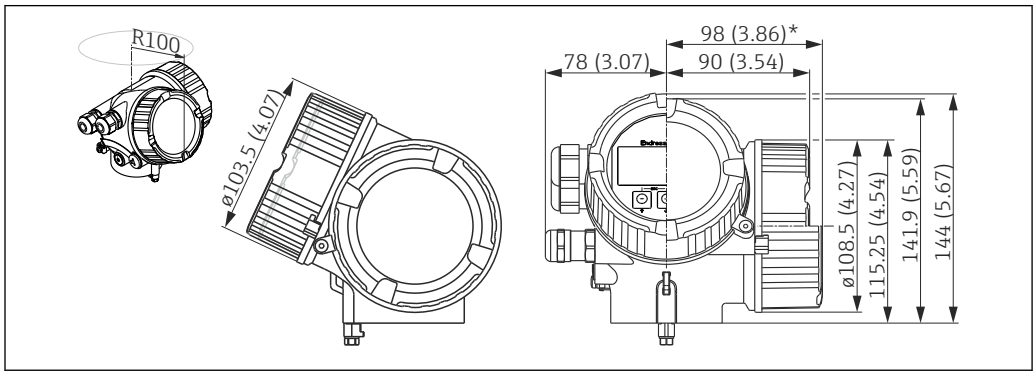

24 *Housing GT18 (316L); Dimensions in mm (in)*

**for devices with integrated overvoltage protection.*

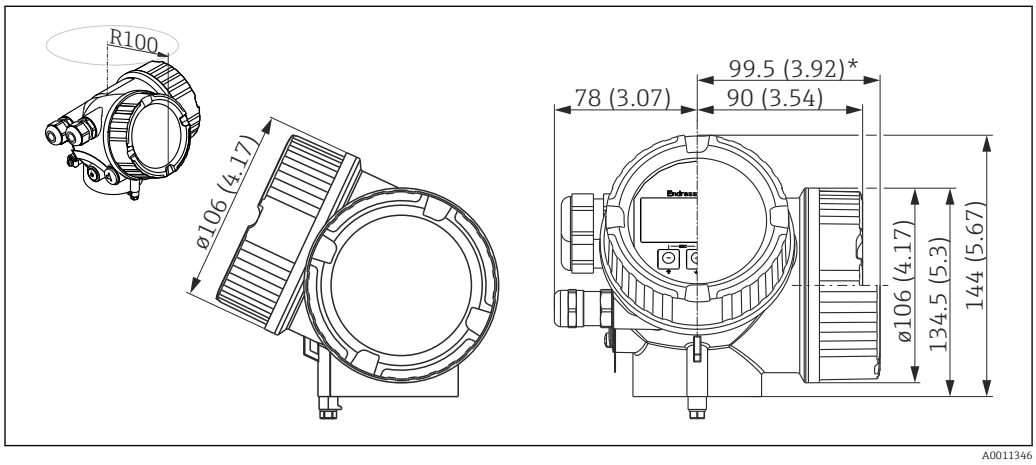

25 *Housing GT19 (Plastics PBT); Dimensions in mm (in)*

**for devices with integrated overvoltage protection.*

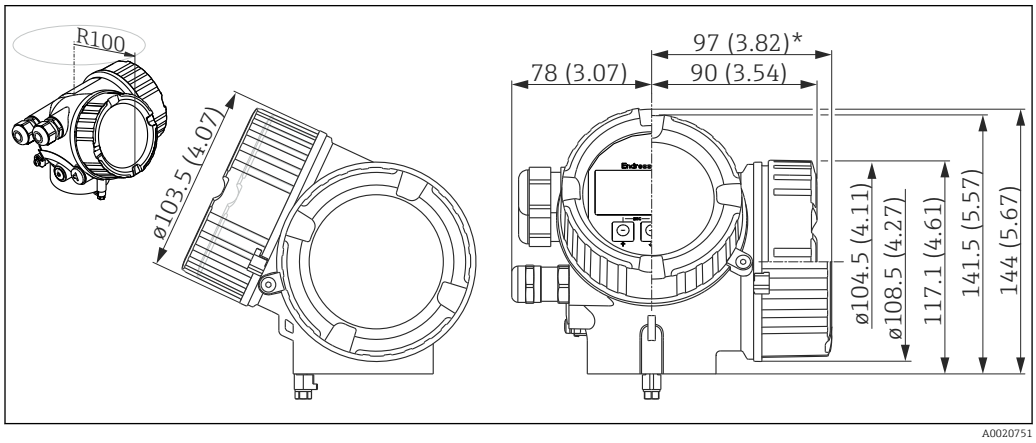

26 *Housing GT20 (Alu coated); Dimensions in mm (in)*

**for devices with integrated overvoltage protection.*

Dimensions of the mounting bracket

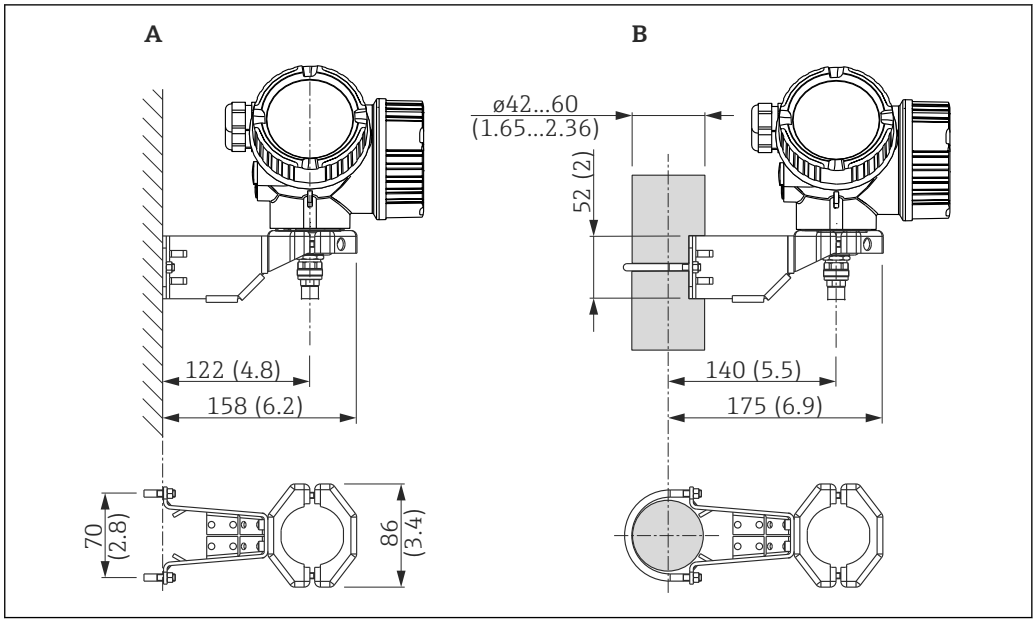

27 *Mounting bracket for the electronics housing: dimensions: mm (in)*

A Wall mounting
B Pipe mounting

For the "Sensor remote" device version (see feature 060 of the product structure), the mounting bracket is part of the delivery. If required, it can also be ordered as an accessory (order code 71102216).

Dimensions of the connection piece for the remote probe

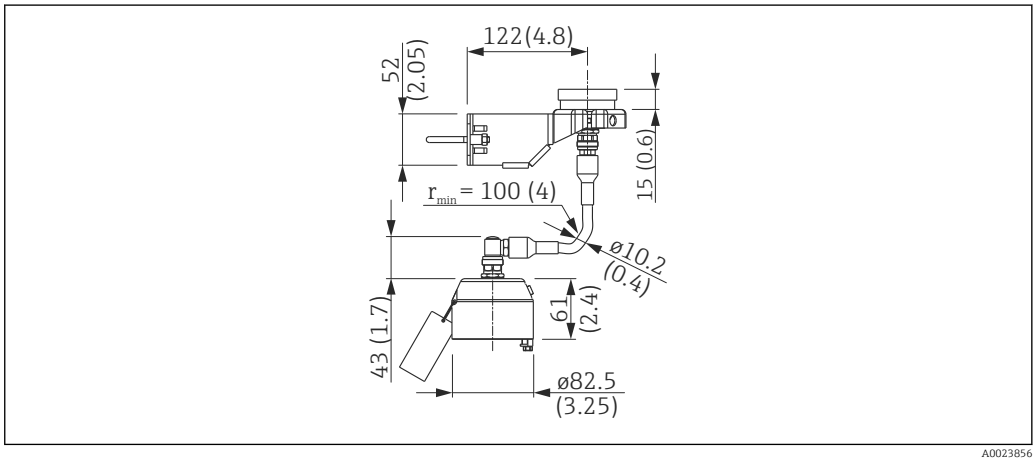

28 *Connection piece for the remote probe; dimensions: mm (in); Length of the connecting cable: as ordered*

FMP51: Dimensions of process connection (G¾,NPT¾) and probe

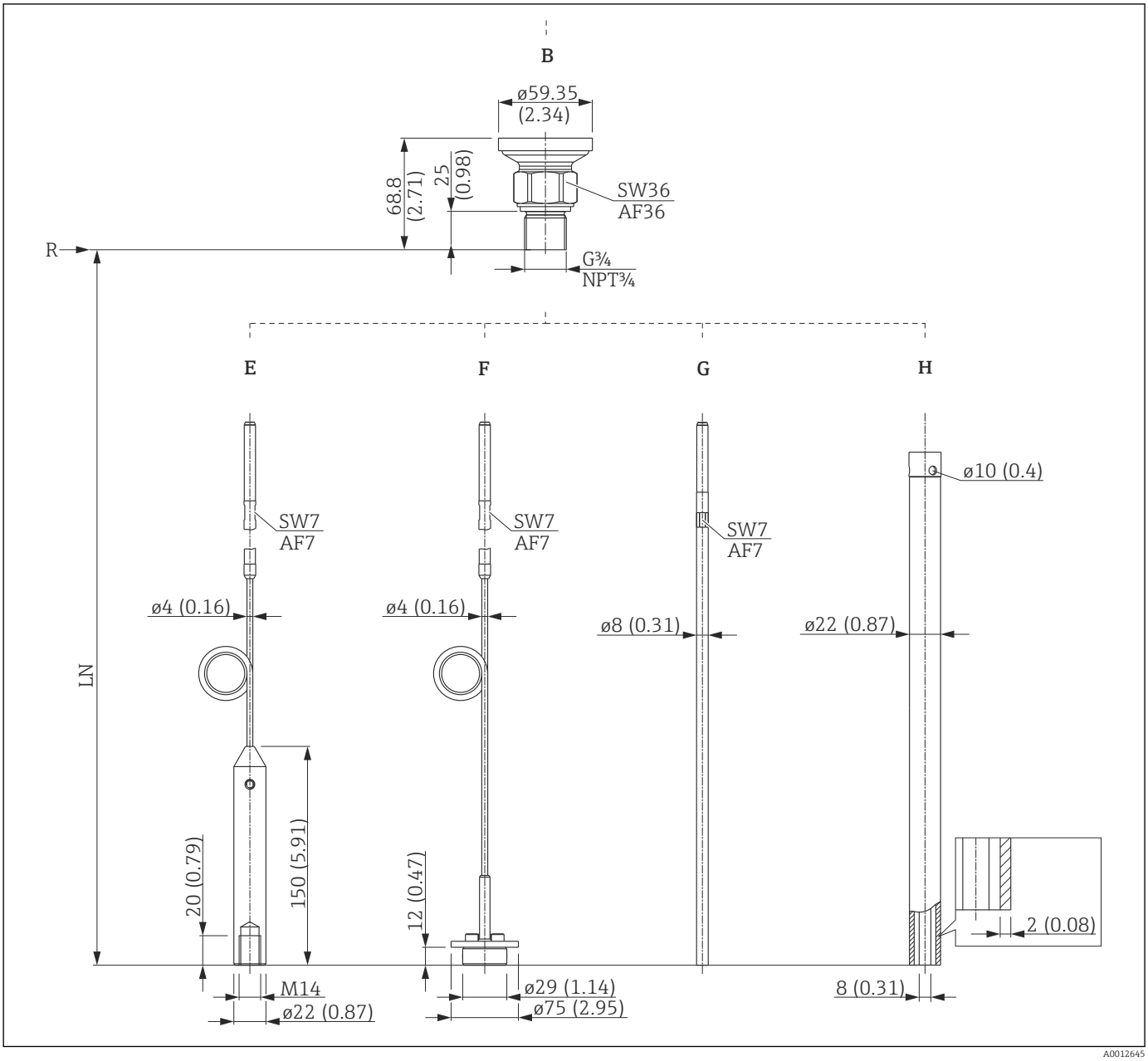

29 FMP51: Process connection / probe; dimensions: mm (in). Unit of measurement mm (in)

B Thread ISO G3/4 or ANSI MNPT3/4 (Feature (100)
E Rope probe 4mm or 1/6" (Feature 060)
F Rope probe 4 mm or 1/6"; centering disk optional (Features 060 and 610)
G Rod probe 8mm or 1/3" (Feature 060)
H Coax probe (Feature 060)
LN Length of probe
R Reference point of the measurement

FMP51: Dimensions of process connection (G1½,NPT1½,flange) and probe

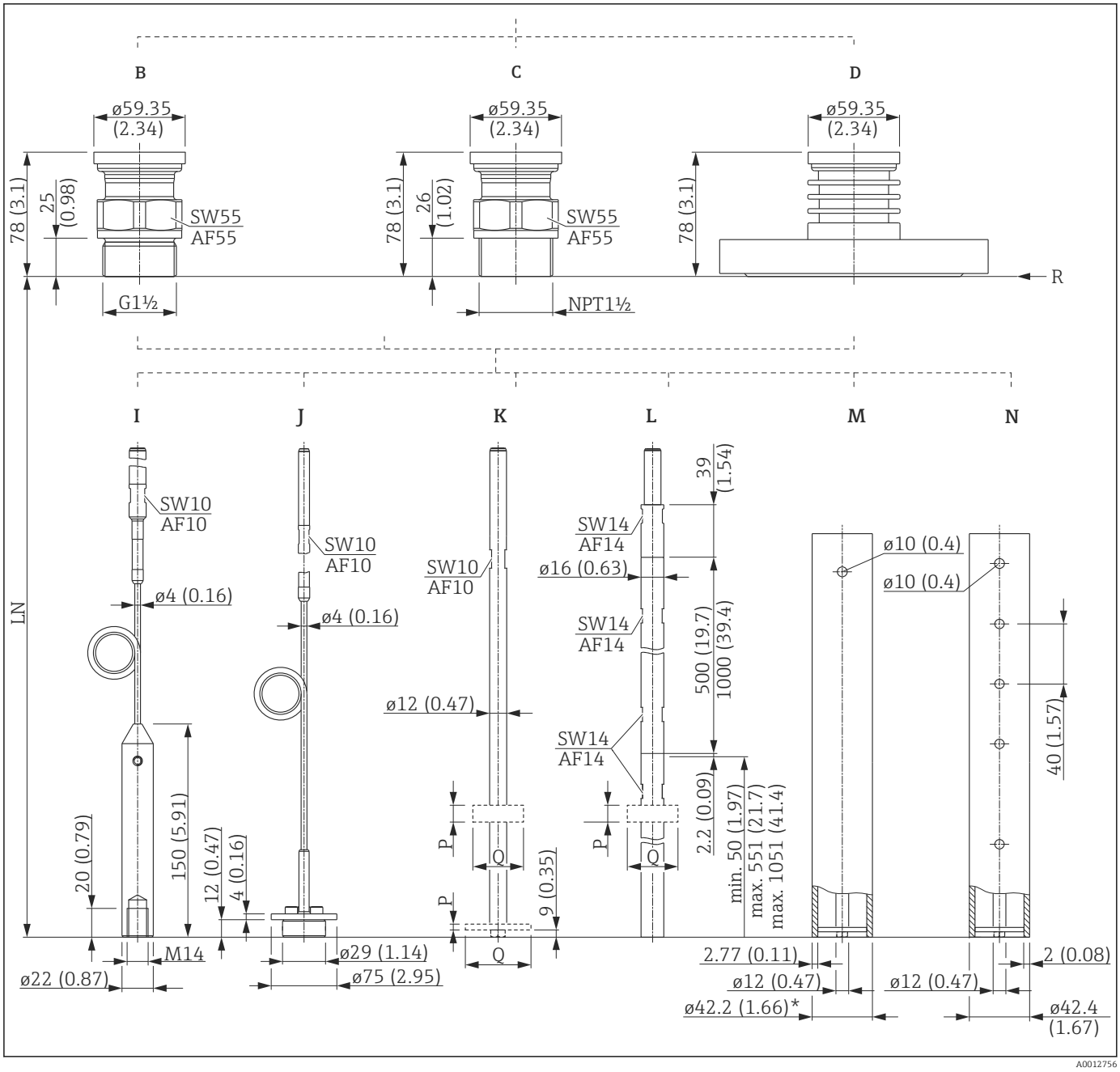

30 *FMP51: Process connection / probe; dimensions: mm (in). Unit of measurement mm (in)*

- *B Thread ISO228 G1-1/2 (Feature 100)*
- *C Thread ANSI MNPT1-1/2 (Feature 100)*
- *D Flange ANSI B16.5, EN1092-1, JIS B2220 (Feature 100)*
- *I Rope probe 4mm or 1/6" (Feature 060)*
- *J Rope probe 4mm or 1/6"; centering disk optional (Features 060 and 610)*
- *K Rod probe 12mm or 1/2"; centering disk optional, see table below (Features 060 and 610)*
- *L Rod probe 16 mm or 0.63in, 20" or 40" divisible; centering disk optional, see table below (Feature 060 and 610)*
- *M Coax probe; AlloyC (Feature 060)*
- *N Coax probe; 316L (Feature 060)*
- *LN Length of probe*
- *R Reference point of the measurement*

	P	Q
PEEK	7 mm (0.28 in)	Φ95 mm (3.74 in)
PFA	10 mm (0.39 in)	37 mm (1.46 in)
316L	4 mm (0.16 in)	Φ45 mm (1.77 in)
		Φ75 mm (2.95 in)

FMP52: Dimensions of process connection and probe

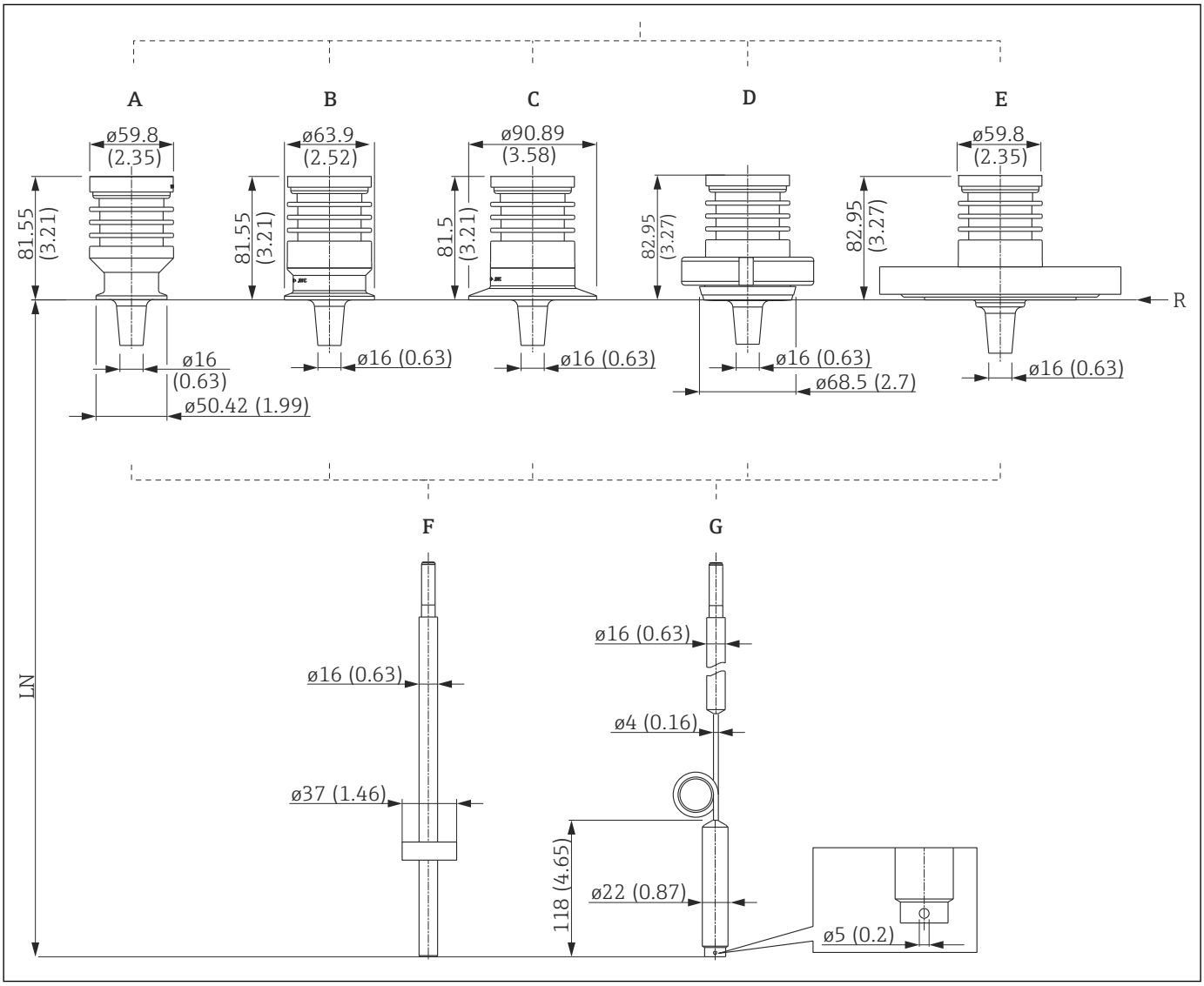

31 FMP52: Process connection / probe; dimensions: mm (in). Unit of measurement mm (in)

A Tri-Clamp 1-1/2" (Feature 100)
B Tri-Clamp 2" (Feature 100)
C Tri-Clamp 3" (Feature 100)
D DIN 11851 (Dairy coupling) DN50 (Feature 100)
E Flange ANSI B16.5, EN1092-1, JIS B2220 (Feature 100)
F Rod probe 16mm or 0.63 in , PFA>316L (Feature 060)
G Rope probe 4mm or1/6", PFA>316 (Feature 060)
LN Length of probe
R Reference point of the measurement

FMP54: Dimensions of process connection and probe

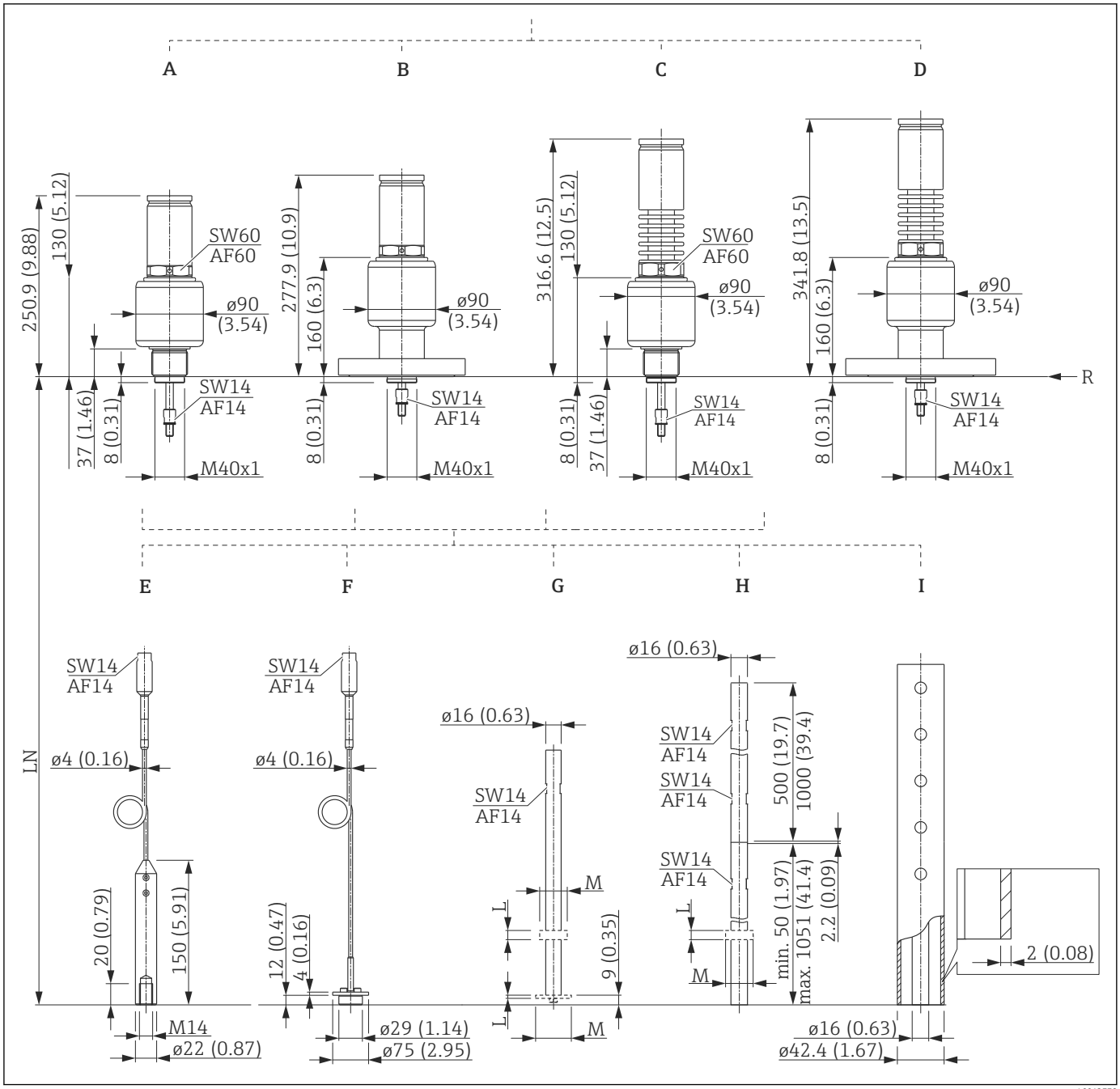

32 *FMP54: Process connection / probe; dimensions: mm (in). Unit of measurement mm (in)*

- *A Thread ISO228 G1-1/2 or ANSI MNPT1-1/2; XT 280 °C (Features 100 and 090)*
- *B Flange ANSI B16.5, EN1092-1, JIS B2220; XT 280 °C (Features 100 and 090)*
- *C Thread ISO228 G1-1/2 or ANSI MNPT1-1/2; HT 450 °C (Features 100 and 090)*
- *D Flange ANSI B16.5, EN1092-1, JIS B2220; HT 450°C (Features 100 and 090)*
- *E Rope probe 4mm or 1/6" (Feature 060)*
- *F Rope probe 4mm (1/6"), centering disk optional (Features 060 and 610)*
- *G Rod probe 16mm or 0.63in; centering disk optional, see table below (Features 060 and 610)*
- *H Rod probe 16mm or 0.63in ; 20" or 40" divisible; centering disk optional, see table below (Feature 060 and 610)*
- *I Coax probe (Feature 060)*
- *LN Length of probe*
- *R Reference point of the measurement*

	L	M
PEEK	7 mm (0.28 in)	Φ95 mm (3.74 in)
PFA	10 mm (3.94 in)	37 mm (1.46 in)
316L	4 mm (0.16 in)	Φ45 mm (1.77 in)
		Φ75 mm (2.95 in)

Tolerance of probe length

Rod and coax probes				
Over [m (ft)]	–	1 (3,3)	3 (9,8)	6 (20)
Up to [m (ft)]	1 (3,3)	3 (9,8)	6 (20)	–
Admissible tolerance [mm (in)]	-5 (-0,2)	-10 (-0,39)	-20 (-0,79)	-30 (-1,18)

Rope probes				
Over [m (ft)]	–	1 (3,3)	3 (9,8)	6 (20)
Up to [m (ft)]	1 (3,3)	3 (9,8)	6 (20)	–
Admissible tolerance [mm (in)]	-10 (-0,39)	-20 (-0,79)	-30 (-1,18)	-40 (-1,57)

Surface roughness of AlloyC-coated flanges

Ra = 3.2 µm; lower surface roughness levels are available on request.

This value is valid for flanges with "AlloyC>316/316L"; see product structure, feature 100 "Process connection". For other flanges the surface roughness matches the corresponding flange standard.

Shortening probes

If necessary, probes can be shortened. When doing so, the following must be observed:

Shortening rod probes

Rod probes must be shortened if the distance to the container floor or outlet cone is less than 10 mm (0.4 in). The rods of a rod probe are shortened by sawing at the bottom end.

Rod probes of FMP52 can **not** be shortened as they are coated.

Shortening rope probes

Rope probes must be shortened if the distance to the container floor or outlet cone is less than 150 mm (6 in).

Rope probes of FMP52 can **not** be shortened as they are coated.

Shortening coax probes

Coax probes must be shortened if the distance to the container floor or outlet cone is less than 10 mm (0.4 in).

Coax probes can be shortened max. 80 mm (3.2 in) from the end. They have centering units inside, which fix the rod centrally in the pipe. The centerings are held with borders on the rod. Shortening is possible up to approx. 10 mm (0.4 in) below the centering unit.

Weight

Housing

Part	Weight
Housing GT18 - stainless steel	approx. 4.5 kg
Housing GT19 - plastic	approx. 1.2 kg
Housing GT20 - aluminium	approx. 1.9 kg

FMP51 with threaded connection G¾ or NPT¾

Part	Weight	Part	Weight
Sensor	approx. 0.8 kg	Rod probe 8 mm	approx. 0.4 kg/m probe length
Rope probe 4 mm	approx. 0.,1 kg/m probe length	Coax probe	approx. 1.2 kg/m probe length

FMP51 with threaded connection G1½/NPT1½ or flange

Part	Weight	Part	Weight
Sensor	approx. 1.2 kg + weight of flange	Rod probe 16 mm	approx. 1.1 kg/m probe length
Rope probe 4 mm	approx. 0.1 kg/m probe length	Coax probe	approx. 3.0 kg/m probe length
Rod probe 12 mm	approx. 0.9 kg/m probe length		

FMP52

Part	Weight	Part	Weight
Sensor	approx. 1.2 kg + weight of flange	Rope probe 4 mm	approx. 0.5 kg/m probe length
		Rod probe 16 mm	approx. 1.1 kg/m probe length

FMP54

Part	Weight	Part	Weight
Sensor - version XT	approx. 6.7 kg + weight of flange	Rope probe 4 mm	approx. 0.1 kg/m probe length
Sensor - version HT	approx. 7.7 kg + weight of flange	Rod probe 16 mm	approx. 1.6 kg/m probe length
		Coax probe	approx. 3.5 kg/m probe length

Materials: GT18 housing

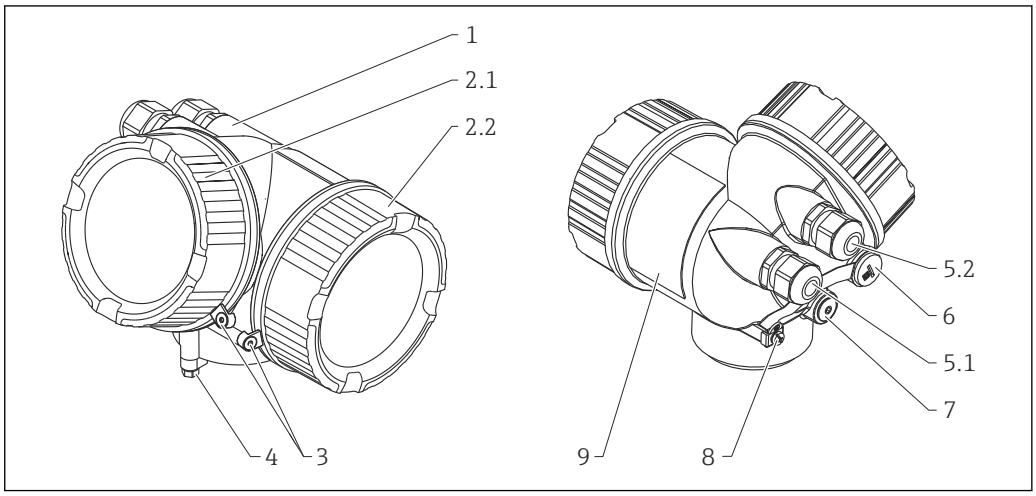

A0013788

No.	Part	Material
1	Housing	CF-3M (316L, 1.4404)
2.1	Cover of the electronics compartment	▪ Cover: CF-3M (316L, 1.4404) ▪ Window: glass ▪ Cover seal: EPDM ▪ Seal of the window: NBR ▪ Thread-coating: Graphite-based lubricant varnish
2.2	Cover of the terminal compartment	▪ Cover: CF-3M (316L, 1.4404) ▪ Cover seal: EPDM ▪ Thread-coating: Graphite-based lubricant varnish
3	Cover lock	▪ Screw: A4 ▪ Clamp: 316L (1.4404)
4	Lock at the housing neck	▪ Screw: A4-70 ▪ Clamp: 316L (1.4404)
5.1	Dummy plug, cable gland, adapter or plug (depending on the device version)	▪ Dummy plug, depending on the device version: – PE – PBT-GF ▪ Cable gland: 316L (1.4404) or nickel-plated brass ▪ Adapter: 316L (1.4404/1.4435) ▪ Seal: EPDM ▪ M12 plug: Nickel-plated brass [1)] ▪ 7/8" plug: 316 (1.4401) [2)]
5.2	Dummy plug, cable gland or adapter (depending on the device version)	▪ Dummy plug: 316L (1.4404) ▪ Cable gland: 316L (1.4404) or nickel-plated brass ▪ Adapter: 316L (1.4404/1.4435) ▪ Seal: EPDM
6	Dummy plug or M12 socket (depending on the device version)	▪ Dummy plug: 316L (1.4404) ▪ M12 socket: 316L (1.4404)
7	Pressure relief stopper	316L (1.4404)
8	Ground terminal	▪ Screw: A4 ▪ Spring washer: A4 ▪ Clamp: 316L (1.4404) ▪ Holder: 316L (1.4404)
9	Nameplate	▪ Plate: 316L (1.4404) ▪ Groove pin: A4 (1.4571)

1) For the version with M12 plug the sealing material is Viton.
2) For the version with 7/8" plug, the sealing material is NBR.

Materials: GT19 housing

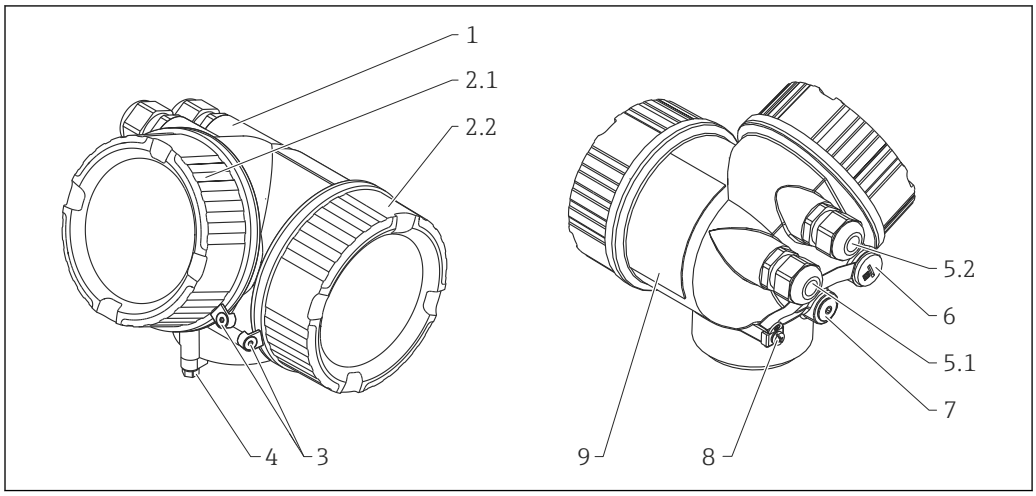

A0013788

No.	Part	Material
1	Housing	PBT
2.1	Cover of the electronics compartment	▪ Cover, depending on the device version: – PA (see-through cover) – PBT (non-transparent cover) ▪ Cover seal: EPDM ▪ Thread-coating: Graphite-based lubricant varnish
2.2	Cover of the terminal compartment	▪ Cover: PBT ▪ Cover seal: EPDM ▪ Thread-coating: Graphite-based lubricant varnish
4	Lock at the housing neck	▪ Screw: A4-70 ▪ Clamp: 316L (1.4404)
5.1	Dummy plug, cable gland, adapter or plug (depending on the device version)	▪ Dummy plug, depending on the device version: – PE – PBT-GF ▪ Cable gland, depending on the device version: – Nickel-plated brass (CuZn) – PA ▪ Adapter: 316L (1.4404/1.4435) ▪ Seal: EPDM ▪ M12 plug: Nickel-plated brass [1)] ▪ 7/8" plug: 316 (1.4401) [2)]
5.2	Dummy plug, cable gland or adapter (depending on the device version)	▪ Dummy plug, depending on the device version: – PE – PBT-GF – Nickel-plated steel ▪ Cable gland, depending on the device version: – Nickel-plated brass (CuZn) – PA ▪ Adapter: 316L (1.4404/1.4435) ▪ Seal: EPDM
6	Dummy plug or M12 socket (depending on the device version)	▪ Dummy plug: Nickel-plated brass (CuZn) ▪ M12 socket: Nickel-plated GD-Zn
7	Pressure relief stopper	Nickel-plated brass (CuZn)
8	Ground terminal	▪ Screw: A2 ▪ Spring washer: A4 ▪ Clamp: 304 (1.4301) ▪ Holder: 304 (1.4301)
9	Nameplate	Sticker

1) For the version with M12 plug the sealing material is Viton.
2) For the version with 7/8" plug, the sealing material is NBR.

Materials: GT20 housing

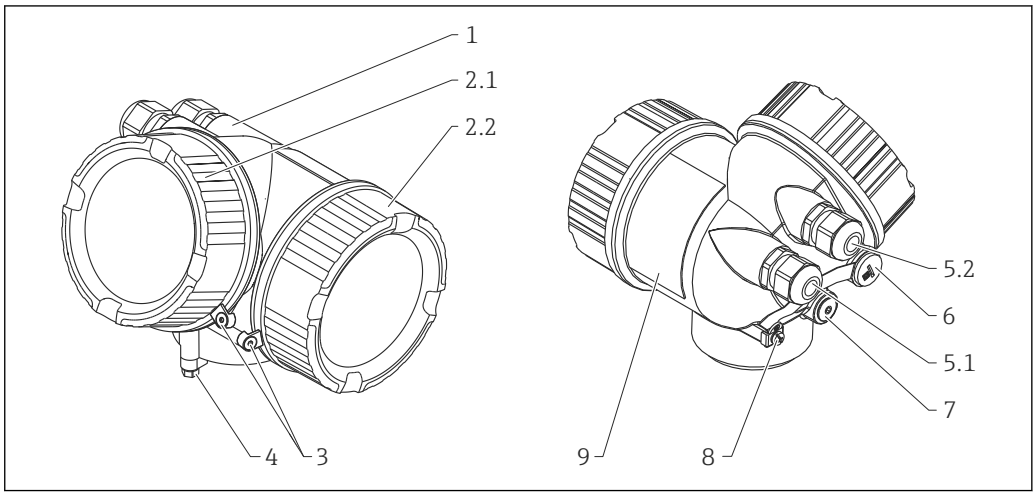

A0013788

Nr.	Part	Material
1	Housing, RAL 5012 (blue)	▪ Housing: AlSi10Mg(<0,1% Cu) ▪ Coating: Polyester
2.1	Cover of the electronics compartment; RAL 7035 (gray)	▪ Cover: AlSi10Mg(<0,1% Cu) ▪ Window: Glass ▪ Cover seal: EPDM ▪ Seal of the window: NBR ▪ Thread-coating: Graphite-based lubricant varnish
2.2	Cover of the terminal compartment; RAL 7035 (gray)	▪ Cover: AlSi10Mg(<0,1% Cu) ▪ Cover seal: EPDM ▪ Thread-coating: Graphite-based lubricant varnish
3	Cover lock	▪ Screw: A4 ▪ Clamp: 316L (1.4404)
4	Lock at the housing neck	▪ Screw: A4-70 ▪ Clamp: 316L (1.4404)
5.1	Dummy plug, cable gland, adapter or plug (depending on the device version)	▪ Dummy plug, depending on the device version: – PE – PBT-GF ▪ Cable gland, depending on the device version: – Nickel-plated brass (CuZn) – PA ▪ Adapter: 316L (1.4404/1.4435) ▪ Seal: EPDM ▪ M12 plug: Nickel-plated brass [1)] ▪ 7/8" plug: 316 (1.4401) [2)]
5.2	Dummy plug, cable gland or adapter (depending on the device version)	▪ Dummy plug, depending on the device version: – PE – PBT-GF – Nickel-plated steel ▪ Cable gland, depending on the device version: – Nickel-plated brass (CuZn) – PA ▪ Adapter: 316L (1.4404/1.4435) ▪ Seal: EPDM
6	Dummy plug or M12 socket (depending on the device version)	▪ Dummy plug : Nickel-plated brass (CuZn) ▪ M12 socket: Nickel-plated GD-Zn
7	Pressure relief stopper	Nickel-plated brass (CuZn)

Nr.	Part	Material
8	Ground terminal	▪ Screw: A2 ▪ Spring washer: A2 ▪ Clamp: 304 (1.4301) ▪ Holder: 304 (1.4301)
9	Nameplate	Sticker

1) For the version with M12 plug the sealing material is Viton.
2) For the version with 7/8" plug, the sealing material is NBR.

Materials: Process connection

Endress+Hauser supplies DIN/EN flanges and threaded process connections made of stainless steel according to AISI 316L (DIN/EN material number 1.4404 or 1.4435). With regard to their temperature stability properties, the materials 1.4404 and 1.4435 are grouped under 13E0 in EN 1092-1 Tab. 18. The chemical composition of the two materials can be identical.

Levelflex FMP51						
Threaded connection			**Flange**		**No.**	**Material**
G¾, NPT¾	*G1½*	*NPT1½*	*DN40...DN200*	*DN40...DN100*		
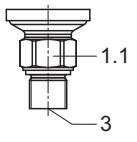	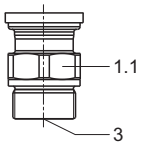	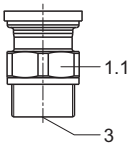	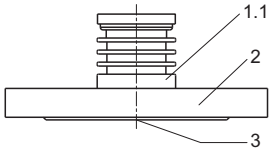	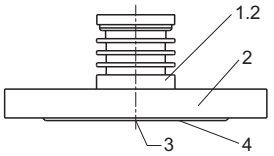	1.1	316L (1.4404)
					1.2	Alloy C22 (2.4602)
					2	ASME: 316/316L EN: 316L (1.4404) JIS: 316L (1.4435)
					3	Ceramic Al_2O_3 99.7 %
					4	Cladding: Alloy C22 (2.4602)

Levelflex FMP52							
Flange	**Dairy coupling**	**Tri-Clamp**			**No.**	**Material**	**Approval**
EN/ASME/JIS	*DN50 (DIN 11851)*	*3"*	*2"*	*1½"*			
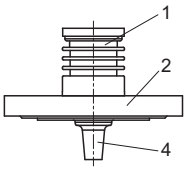	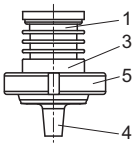	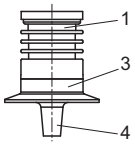	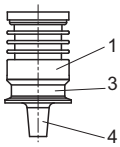	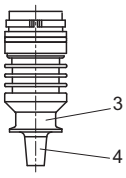	1	304 (1.4301)	
					2	ASME: 316/316L EN: 316L (1.4404) JIS: 316L (1.4435)	
					3	316L (1.4404)	
					4	Coating 2 mm (0.08 in): PTFE (Dyneon TFM1600)	USP Cl. VI [1]
					5	304L (1.4307)	

1) Plastic parts in contact with process have been tested according to USP <88> Class VI-70°C.

Levelflex FMP54					
Threaded connection *G1½, NPT1½*		**Flange**		**No.**	**Material**
HT version	*XT version*	*HT version*	*XT version*		
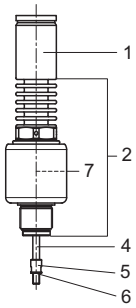	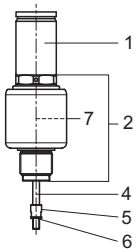	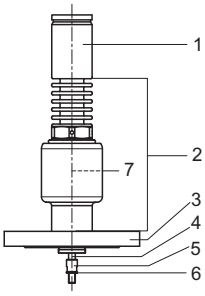	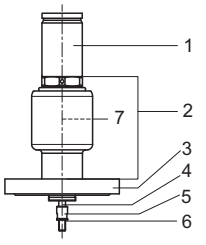	1	304 (1.4301)
				2	316L (1.4404)
				3	ASME: 316/316L EN: 316L (1.4404) JIS: 316L (1.4435)
				4	Alloy C22 (2.4602)
				5	316L (1.4404)
				6	Nordlock washer: 1.4547
				7	Ceramic Al_2O_3 99.7 %, pure graphite

Levelflex FMP51								
Rope probe		Rod probe		Coax probe				
Φ 4 mm (1/6")	*Φ 4 mm (1/6") with centering disk*	*Φ 8 mm (1/3")*	*Φ 12.7 mm (1/2") AlloyC*	*Thread G3/4*	*Thread G1-1/2 AlloyC*	*Thread G1-1/2 316L*	**No.**	**Material**
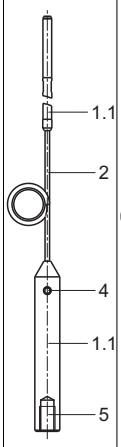	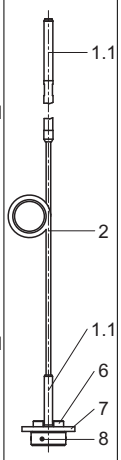	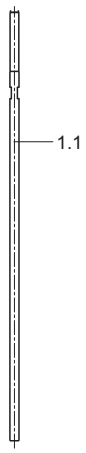	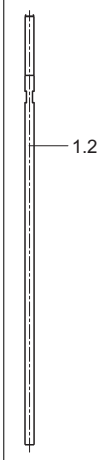	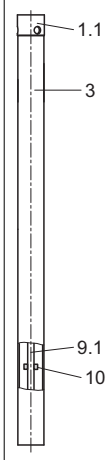	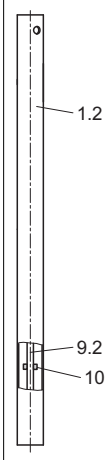	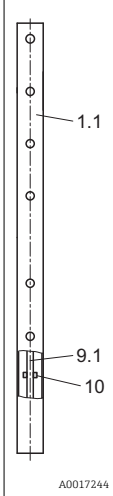	1.1	316L (1.4404)
							1.2	Alloy C22 (2.4602)
							2	316 (1.4401)
							3	316L (1.4435)
							4	Set screw: A4-70
							5	Screw for tightening: A2-70
							6	Socket cap screw: A4-80
							7	Disk: 316L (1.4404)
							8	Set screw: A4-70
							9.1	Rod: 316L (1.4404)
							9.2	Alloy C22 (2.4602)
							10	Centering star: PFA

Levelflex FMP51			
Rod probe		**No.**	**Material**
Φ 12 mm (1/2") 316L	*Φ 16 mm (2/3") divisible*		
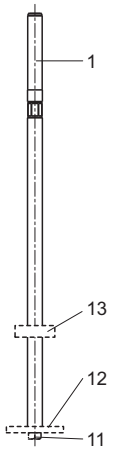	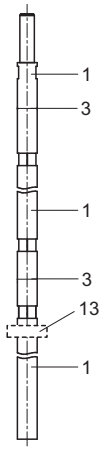	1	316L (1.4404)
		3	Connecting bolt: Alloy C22 (2.4602)
			Nordlock washer: 1.4547
		11	Hexagon head screw: A4-70
			Nordlock washer: 1.4547
		12	Centering star, PEEK
			Center washer, 316L (1.4404)
		13	Center washer, PFA

Levelflex FMP52			
Rod probe *Φ 16 mm (2/3") coated*	**Rope probe** *Φ 4 mm (1/6") coated*	**No.**	**Material**
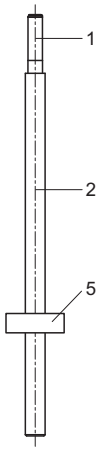	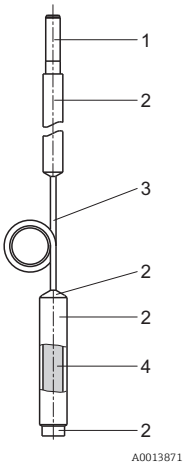	1	316L (1.4404)
		2	Coating 2 mm (0.08 in): PFA (Daikin PFA AP230)
		3	Rope: 316 (1.4401)
			Coating 0.75mm (0.03 in): PFA (Daikin PFA AP230)
		4	Core: 316L (1.4435)
		5	PFA (Daikin PFA AP230), centering star

Levelflex FMP54						
Rope probe		**Rod probe**		**Coax probe**	**No.**	**Material**
Φ 4 mm (1/6")	*Φ 4 mm (1/6") with centering disk*	*Φ 16 mm (2/3") with centering disk*	*Φ 16 mm (2/3") divisible*			
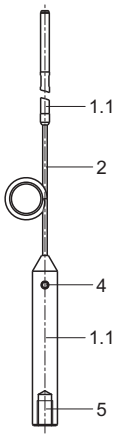	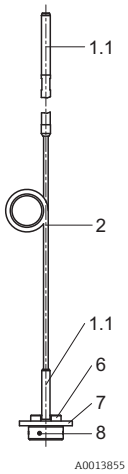	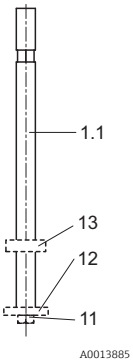	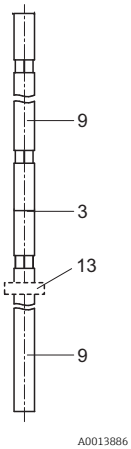	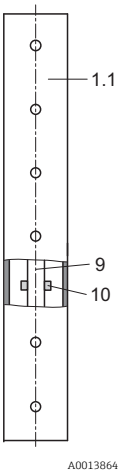	1.1	316L (1.4404) [1]
					2	316 (1.4401)
					3	Connecting bolt: Alloy C22 (2.4602)
						Nordlock washer: 1.4547
					4	Set screw: A4-70
					5	Screw for tightening: A2-70
					6	Socket cap screw: A4-80
					7	Disk: 316L (1.4404)
					8	Set screw: A4-70
					9	Rod: 316L (1.4404)
					10	Centering star: ceramic Al_2O_3 99.7 %
					11	Hexagon head screw: A4-70
						Nordlock washer: 1.4547
					12	Centering star, PEEK
						Center washer, 316L (1.4404)
					13	Centering star, PFA

1) For probes with gas phase compensation this is also the material of the reference rod.

Materials: Mounting bracket

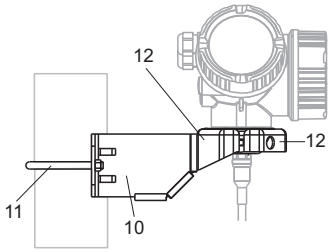

A0015143

Mounting bracket for version "Sensor remote"		
Position	**Part**	**Material**
10	Bracket	316L (1.4404)
11	Bracket	316Ti (1.4571)
	Screw/nuts	A4-70
	Distance sleeves	316Ti (1.4571) or 316L (1.4404)
12	Half-shells	316L (1.4404)

Materials: Adapter and cable for remote display

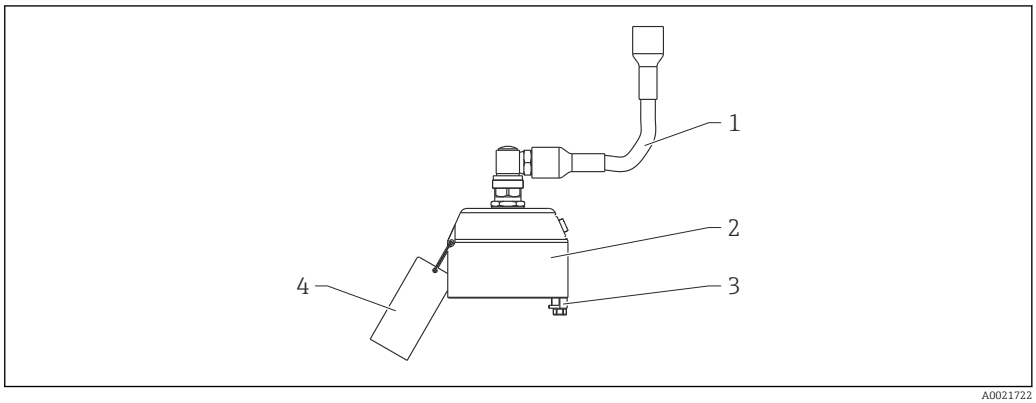

A0021722

Adapter and cable for version "Sensor remote"		
Position	**Part**	**Material**
1	Cable	FRNC
2	Sensor adapter	304 (1.4301)
3	Clamp	316L (1.4404)
	Screw	A4-70
4	Loop	316 (1.4401)
	Crimp sleeve	Aluminum
	Nameplate	304 (1.4301)

Materials: Weather protection cover

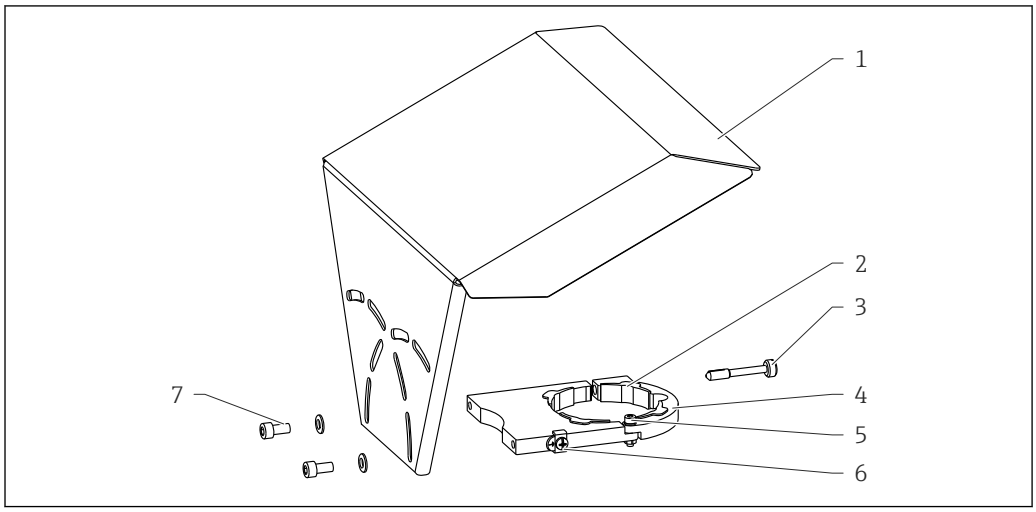

A0015473

No	Part: Material
1	Protection cover: 316L (1.4404)
2	Molded rubber part (4x): EPDM
3	Clamping screw: 316L (1.4404) + carbon fibre
4	Bracket: 316L (1.4404)
5	▪ Cheese head screw: A4-70 ▪ Nut: A4 ▪ Spring washer: A4
6	Ground terminal ▪ Screw: A4 ▪ Spring washer: A4 ▪ Clamp: 316L (1.4404) ▪ Holder: 316L (1.4404)
7	▪ Washer: A4 ▪ Cheese head screw: A4-70

Operability

Operating concept

Operator-oriented menu structure for user-specific tasks
- Commissioning
- Operation
- Diagnostics
- Expert level

Operatring languages
- English (contained in every device)
- One additional language as ordered (feature 500 of the product structure)

Quick and safe commissioning
- Interactive wizard with graphical interface for easy commissioning via FieldCare/DeviceCare
- Menu guidance with brief explanations of the individual parameter functions

Reliable operation
- Standardized operation at the device and in the operating tools
- Data storage device (HistoROM) for process and measuring device data with event logbook available at all times - even if electronics modules are replaced

Efficient diagnostics increase measurement reliability
- Remedy information is integrated in plain text
- Diverse simulation options and line recorder functions

Local operation

Order code for "Display; Operation", option **C** "SD02"	Order code for "Display; Operation", option **E** "SD03"
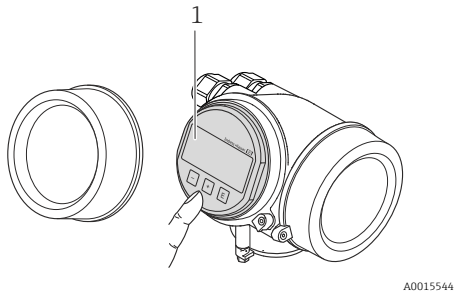	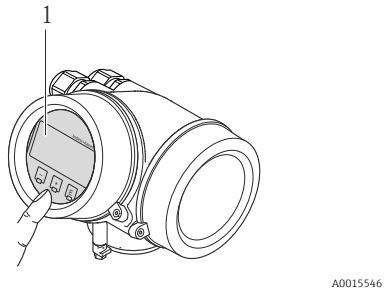
1 Operation with pushbuttons	*1 Operation with touch control*

Display elements
- 4-line display
- In the case of order code for "Display; Operation", option **E**: white background lighting; switches to red in event of device errors
- Format for displaying measured variables and status variables can be individually configured
- Permitted ambient temperature for the display: −20 to +70 °C (−4 to +158 °F)
  The readability of the display may be impaired at temperatures outside the temperature range.

Operating elements
- In the case of order code "Display; Operation", Option **C**: local operation with 3 push buttons (⊕, ⊖, Ⓔ)
- In the case of order code for "Display; Operation", option **E**: external operation via touch control; 3 optical keys: ⊕, ⊖, Ⓔ
- Operating elements also accessible in various hazardous areas

Additional functionality
- Data backup function
  The device configuration can be saved in the display module.
- Data comparison function
  The device configuration saved in the display module can be compared to the current device configuration.
- Data transfer function
  The transmitter configuration can be transmitted to another device using the display module.

Operation with remote display and operating module FHX50

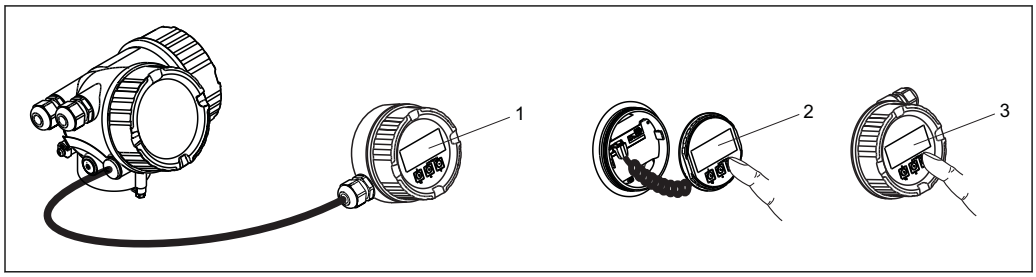

A0013137

33 FHX50 operating options

1 *Housing of the remote display and operating module FHX50*
2 *Display and operating module SD02, push buttons; cover must be removed*
3 *Display and operating module SD03, optical keys; can be operated through the glass of the cover*

Remote operation

Via HART protocol

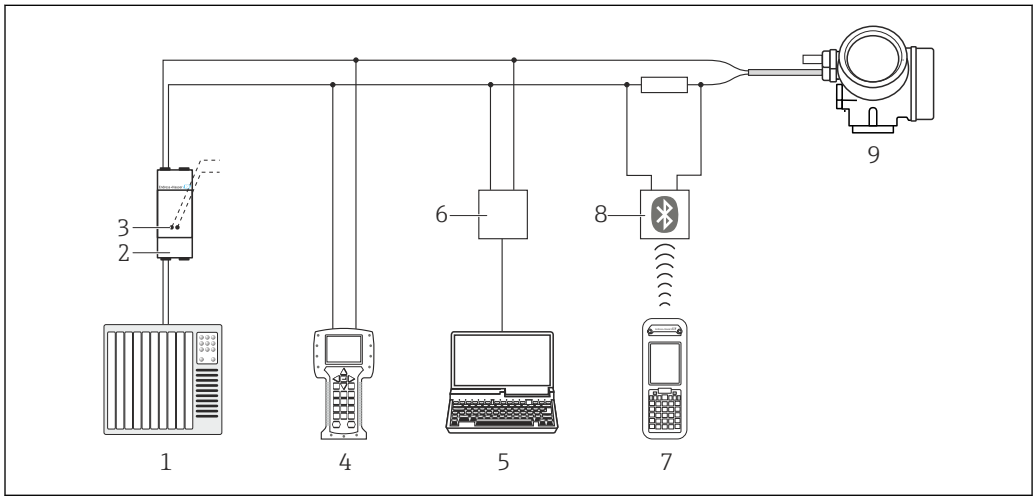

A0013764

34 Options for remote operation via HART protocol

1 *PLC (programmable logic controller)*
2 *Transmitter power supply unit, e.g. RN221N (with communication resistor)*
3 *Connection for Commubox FXA191, FXA195 and Field Communicator 375, 475*
4 *Field Communicator 475*
5 *Computer with operating tool (e.g. FieldCare, AMS Device Manager, SIMATIC PDM)*
6 *Commubox FXA191 (RS232) or FXA195 (USB)*
7 *Field Xpert SFX350/SFX370*
8 *VIATOR Bluetooth modem with connecting cable*
9 *Transmitter*

Via PROFIBUS PA protocol

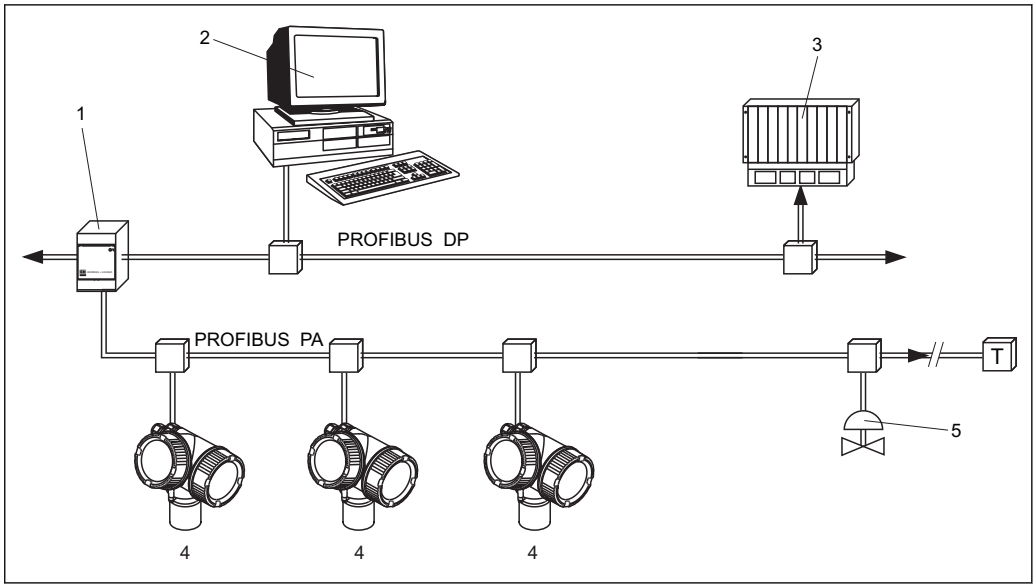

A0015775

1 *Segment coupler*
2 *Computer with Profiboard/Proficard and operating tool (e.g. FieldCare)*
3 *PLC (Progrommable Logic Controller)*
4 *Transmitter*
5 *Additional functions (valves etc.)*

Via FOUNDATION Fieldbus

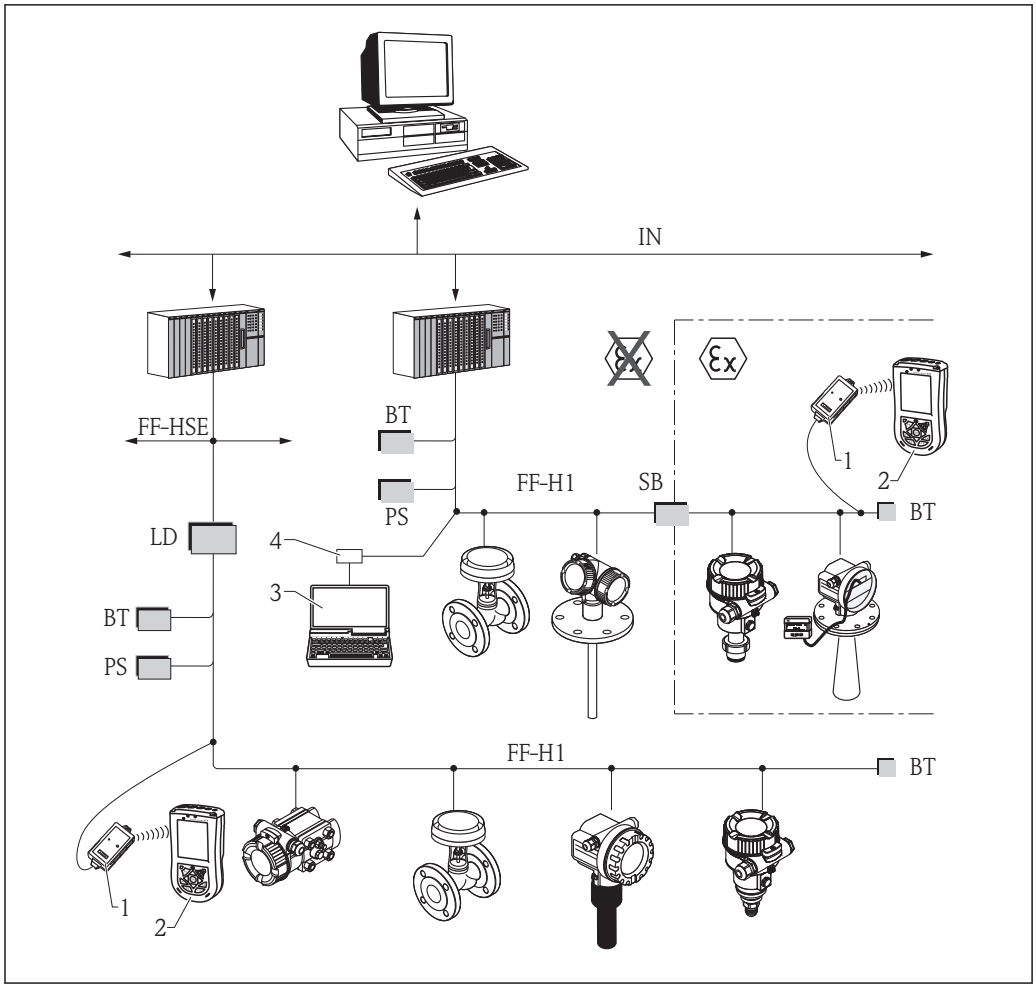

35 FOUNDATION Fieldbus system architecture with associated components

1 FFblue Bluetooth modem
2 Field Xpert SFX350/SFX370
3 FieldCare
4 NI-FF interface card

IN	Industrial network
FF-HSE	High Speed Ethernet
FF-H1	FOUNDATION Fieldbus-H1
LD	Linking Device FF-HSE/FF-H1
PS	Bus Power Supply
SB	Safety Barrier
BT	Bus Terminator

Via service interface (CDI)

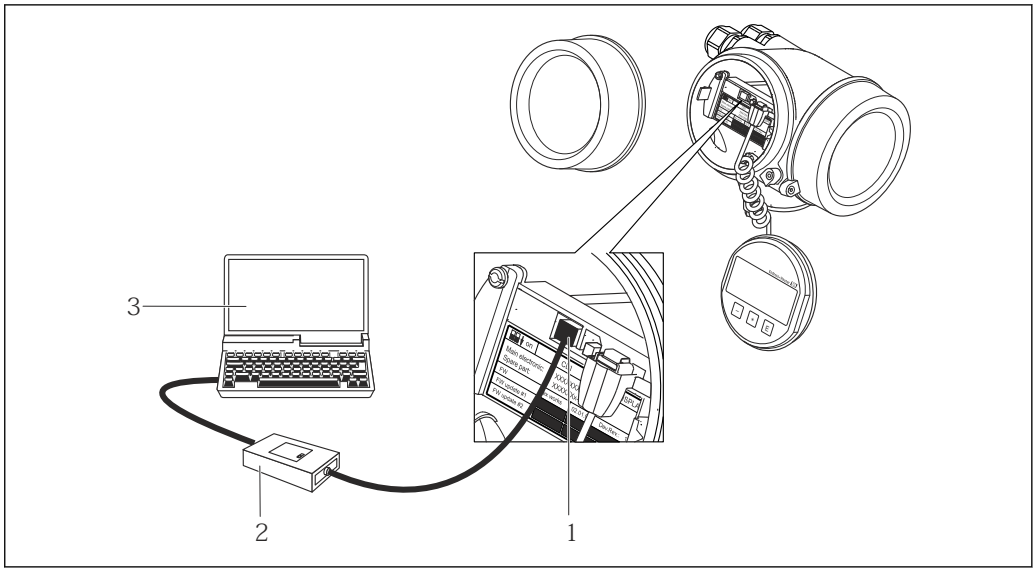

1 *Service interface (CDI) of the measuring device (= Endress+Hauser Common Data Interface)*
2 *Commubox FXA291*
3 *Computer with "FieldCare" operating tool*

Integration in tank gauging system

The Endress+Hauser Tank Side Monitor NRF590 provides integrated communications for sites with multiple tanks, each with one or more sensors on the tank, such as radar, spot or average temperature, capacitive probe for water detection and/or pressure sensors. Multiple protocols out of the Tank Side Monitor guarantee connectivity to nearly any of the existing industry standard tank gauging protocols. Optional connectivity of analog 4...20 mA sensors, digital I/O and analog output simplify full tank sensor integration. Use of the proven concept of the intrinsically safe HART bus for all on-tank sensors yields extremely low wiring costs, while at the same time providing maximum safety, reliability and data availability.

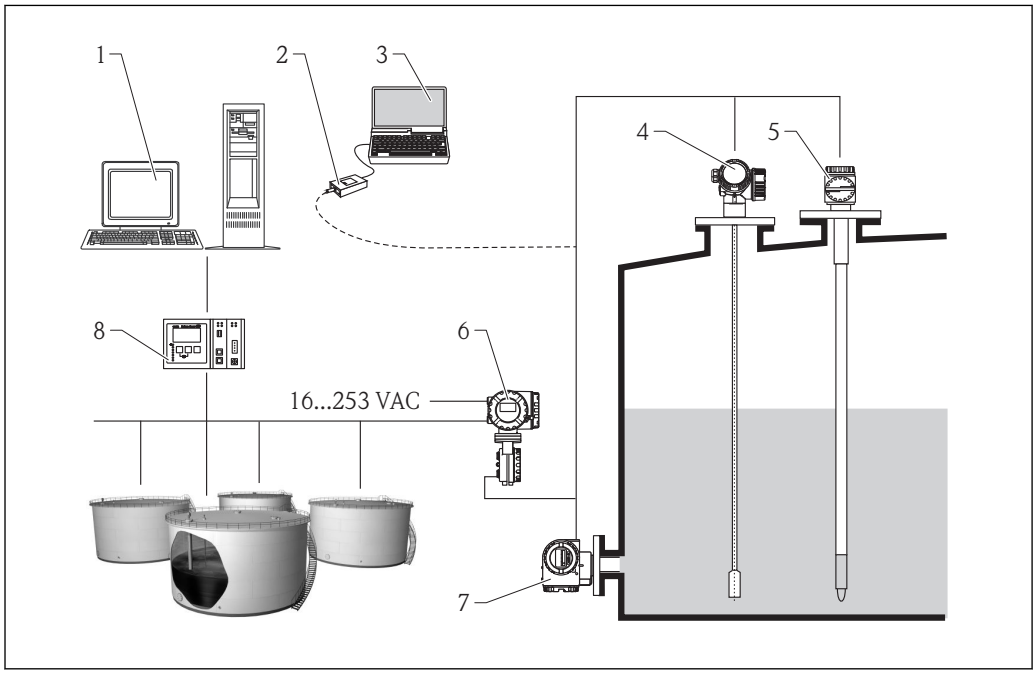

36 The complete measuring system consists of:

1 *Tankvision workstation*
2 *Commubox FXA195 (USB) - optional*
3 *Computer with operating tool (ControlCare) - optional*
4 *Level measuring device*
5 *Temperature measuring device*
6 *Tank Side Monitor NRF590*
7 *Pressure measuring device*
8 *Tankvision Tank Scanner NXA820*

System integration via Fieldgate

Vendor Managed Inventory

By using Fieldgates to interrogate tank or silo levels remotely, suppliers of raw materials can provide their regular customers with information about the current supplies at any time and, for example, account for them in their own production planning. For their part, the Fieldgates monitor the configured level limits and, if required, automatically activate the next supply. The spectrum of options here ranges from a simple purchasing requisition via e-mail through to fully automatic order administration by coupling XML data into the planning systems on both sides.

Remote maintenance of measuring equipment

Fieldgates not only transfer the current measured values, they also alert the responsible standby personnel, if required, via e-mail or SMS. In the event of an alarm or also when performing routine checks, service technicians can diagnose and configure connected HART devices remotely. All that is required for this is the corresponding HART operating tool (e.g. FieldCare, ...) for the connected device. Fieldgate passes on the information transparently, so that all options for the respective operating software are available remotely. Some on-site service operations can be avoided by using remote diagnosis and remote configuration and all others can at least be better planned and prepared.

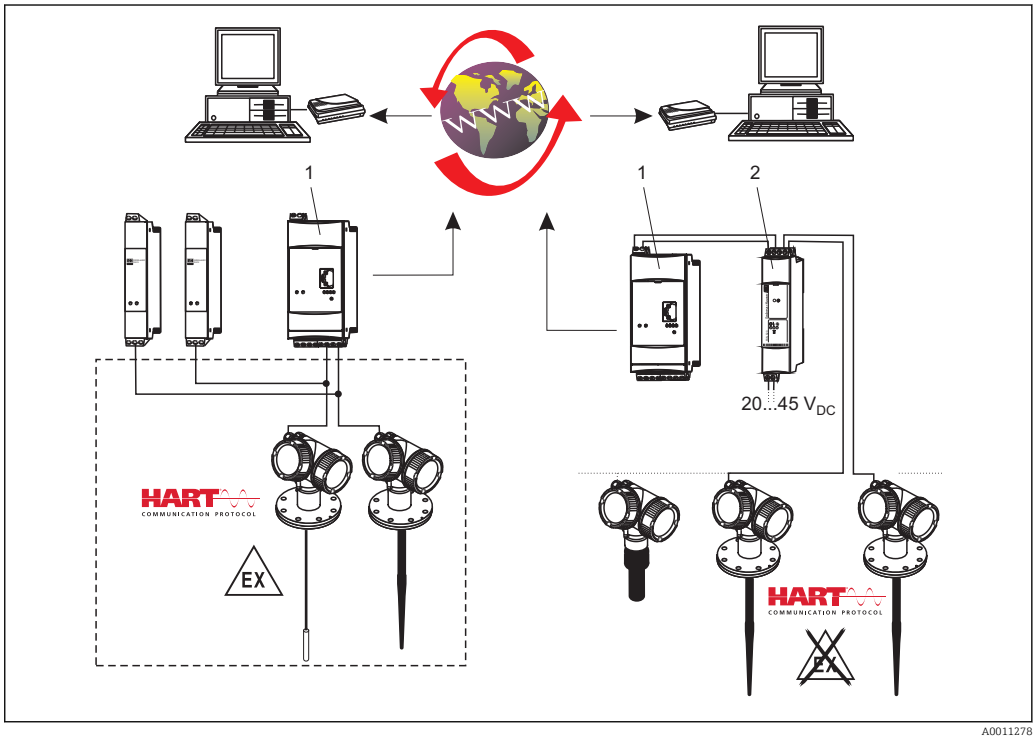

37 The complete measuring system consists of devices and:

1 Fieldgate FXA520
2 Multidrop Connector FXN520

The number of instruments which can be connected in mutidrop mode can be calculated by the "FieldNetCalc" program. A description of this program can be found in Technical Information TI 400F (Multidrop Conncector FXN520). The program is available form your Endress+Hauser sales organisation or in the internet at: www.de.endress.com/Download (text search = "Fieldnetcalc").

Certificates and approvals

CE mark

The measuring system meets the legal requirements of the applicable EC guidelines. These are listed in the corresponding EC Declaration of Conformity together with the standards applied.

Endress+Hauser confirms successful testing of the device by affixing to it the CE mark.

C-Tick symbol

The measuring system meets the EMC requirements of the "Australian Communications and Media Authority (ACMA)".

Ex approval

The devices are certified for use in hazardous areas and the relevant safety instructions are provided in the separate "Safety Instructions" (XA) document. Reference is made to this document on the nameplate.

The separate documentation "Safety Instructions" (XA) containing all the relevant explosion protection data is available from your Endress+Hauser Sales Center. Correlation of documentations to the device → 126.

Dual seal according to ANSI/ISA 12.27.01

The devices have been designed according to ANSI/ISA 12.27.01 as dual seal devices, allowing the user to waive the use and save the cost of installing external secondary process seals in the conduit as required by the process sealing sections of ANSI/NFPA 70 (NEC) and CSA 22.1 (CEC). These instruments comply with the North-American installation practice and provide a very safe and cost-saving installation for pressurized applications with hazardous fluids.

Further information can be found in the Safety Instructions (XA) of the relevant devices.

Functional Safety

Used for level monitoring (MIN, MAX, range) up to SIL 3 (homogeneous redundancy), independently assessed by TÜV Rhineland as per IEC 61508. Other information see documentation SD00326F: "Functional Safety Manual".

Overfill prevention

WHG

DIBt Z-65.16-501

Sanitary compatibility

The following table shows which device versions meet the requirements of 3A-Sanitary Standard No. 74 and are certified by the EHEDG.

FMP52			
Feature	**Option**	**3A**	**EHEDG**
060: Probe	CA Rod 16mm PFA>316L	✔	✔
	CB Rod 0.63 in PFA>316L	✔	✔
100: Process connection	TAK Tri-Clamp ISO2852 DN40-51 (2"), PTFE>316L	✔	✔
	TLK Tri-Clamp ISO2852 DN70-76.1 (3"), PTFE>316L	✔	✔
	TNK Tri-Clamp ISO2852 DN38 (1-1/2"), PTFE>316L	✔	✔

Suitable fittings and seals must be used to ensure hygiene-compliant design according to the specifications of 3A and EHEDG.

The gap-free connections can be cleaned without residue using the usual cleaning methods (CIP and SIP).

Wetted non-metallic parts of the FMP52 conform to FDA 21 CFR 177.1550 and USP Class VI.

AD2000

- For FMP51/FMP54:
  The wetted material 316L (1.4435/1.4404) corresponds to AD2000 - W2/W10.
- For FMP52/FMP55:
  The pressure retaining material 316L (1.4435/1.4404) corresponds to AD2000 - W2/W10.
- Declaration of conformity: see product structure, feature 580, option JF.

NACE MR 0175 / ISO 15156

For FMP51, FMP54, FMP55:
- The wetted, metallic materials comply with the requirements of NACE MR 0175 / ISO 15156.
- Declaration of conformity: see product structure, feature 580, option JB.

NACE MR 0103

For FMP51, FMP54, FMP55:
- The wetted, metallic materials comply with the requirements of NACE MR 0103.
- The certificate of compliance is based on NACE MR 0175.
  The hardness and the intercrystalline corrision have been tested, as well as the heat treatment (solution annealed) has been carried out. The used materials comply therefore with the requirements of NACE MR 0103.
- Declaration of conformity: see product structure, feature 580, option JE.

ASME B31.1 and B31.3

- The dimensions, materials of construction, pressure / temperature ratings and identification markings of the device comply with the requirements of AMSE B31.1 and ASME B31.3
- Declaration of conformity: see product structure, feature 580, option KV.

Pressure Equipment Directive

Conformity assessment was carried out as per Module A, the proof of statical stability and endurance strength as per EN 13445 and AD2000.

The FMP54 corresponds to the 97/23/EC Directive (Pressure Equipment Directive). It is a pressure accessory with a volume < 0.1 l, corresponding to Category I.

The FMP54 is not suitable for use with unstable gases at nominal pressures above 200 bar (2 900 psi).

Steam boiler approval

The FMP54 is approved as a limiting device for high water (HW) and low water (LW) for liquids in containers which are subject to the requirements of EN12952-11 and EN12953-9 (certified by TÜV Nord).

Product structure: Feature 590 "Additional Approval", option LX "Steam boiler approval".

For details refer to Safety Instructions SD00349F and Planning Recommendations SD01071F.

Device with steam boiler approval always have a SIL approval as well.

Marine certificate

- GL (Germanischer Lloyd)
- ABS (American Bureau of Shipping)
- LR (Lloyd's Register)
- DNV (Det Norske Veritas)
- BV (Bureau Veritas)

Only in connection with HART or PROFIBUS PA.

Telecommunications

Complies with part 15 of the FCC rules for an unintentional radiator. All probes meet the requirements for a Class A digital device.

In addition, all probes in metallic tanks as well as the coax probe meet the requirements for a Class B digital device.

CRN-Zulassung

Some device versions have a CRN approval. Devices are CRN approved if the folowing two conditions are met:

- The device has a CSA approval (Product structure: Feature 010 "Approval")
- The device has a CRN approved process connection according to the following table.

Feature 010 of the product structure	Approval
AAJ	2" 300/600lbs RF, 316/316L flange ANSI B16.5
ABJ	3" 300/600lbs RF, 316/316L flange ANSI B16.5

Feature 010 of the product structure	Approval
AEJ	1-1/2" 150lbs RF, 316/316L flange ANSI B16.5
AEK	1-1/2" 150lbs, PTFE>316/316L flange ANSI B16.5
AEM	1-1/2" 150lbs, AlloyC>316/316L flange ANSI B16.5
AFJ	2" 150lbs RF, 316/316L flange ANSI B16.5
AFK	2" 150lbs, PTFE>316/316L flange ANSI B16.5
AFM	2" 150lbs, AlloyC>316/316L flange ANSI B16.5
AGJ	3" 150lbs RF, 316/316L flange ANSI B16.5
AGK	3" 150lbs, PTFE>316/316L flange ANSI B16.5
AGM	3" 150lbs, AlloyC>316/316L flange ANSI B16.5
AHJ	4" 150lbs RF, 316/316L flange ANSI B16.5
AHK	4" 150lbs, PTFE>316/316L flange ANSI B16.5
AJJ	6" 150lbs RF, 316/316L flange ANSI B16.5
AJK	6" 150lbs, PTFE>316/316L flange ANSI B16.5
AKJ	8" 150lbs RF, 316/316L flange ANSI B16.5
AOJ	4" 600lbs RF, 316/316L flange ANSI B16.5
AQJ	1-1/2" 300lbs RF, 316/316L flange ANSI B16.5
AQK	1-1/2" 300lbs, PTFE>316/316L flange ANSI B16.5
AQM	1-1/2" 300lbs, AlloyC>316/316L flange ANSI B16.5
ARJ	2" 300lbs RF, 316/316L flange ANSI B16.5
ARK	2" 300lbs, PTFE>316/316L flange ANSI B16.5
ARM	2" 300lbs, AlloyC>316/316L flange ANSI B16.5
ASJ	3" 300lbs RF, 316/316L flange ANSI B16.5
ASK	3" 300lbs, PTFE>316/316L flange ANSI B16.5
ASM	3" 300lbs, AlloyC>316/316L flange ANSI B16.5
ATJ	4" 300lbs RF, 316/316L flange ANSI B16.5
ATK	4" 300lbs, PTFE>316/316L flange ANSI B16.5
AZJ	4" 900lbs RF, 316/316L flange ANSI B16.5
A6J	2" 1500lbs RF, 316/316L Flansch ANSI B16.5
A7J	3" 1500lbs RF, 316/316L flange ANSI B16.5
A8J	4" 1500lbs RF, 316/316L flange ANSI B16.5
GGJ	Thread ISO228 G1-1/2, 316L
GIJ	Thread ISO228 G1-1/2, 200bar, 316L
GJJ	Thread ISO228 G1-1/2, 400bar, 316L
RAJ	Thread ANSI MNPT1-1/2, 200bar, 316L
RBJ	Thread ANSI MNPT1-1/2, 400bar, 316L
RGJ	Thread ANSI MNPT1-1/2, 316L
TAK	Tri-Clamp ISO2852 DN40-51 (2"), 3A, PTFE>316L
TDK	Tri-Clamp ISO2852 DN40-51 (2"), PTFE>316L
TFK	Tri-Clamp ISO2852 DN70-76.1 (3"), PTFE>316L
TJK	Tri-Clamp ISO2852 DN38 (1-1/2"), PTFE>316L
TLK	Tri-Clamp ISO2852 DN70-76.1 (3"), 3A, PTFE>316L
TNK	Tri-Clamp ISO2852 DN38 (1-1/2"), 3A, PTFE>316L

- Process connections without CRN approval are not included in this table.
- Refer to the product structure to see which process connections are available for a specific device type.
- CRN approved devices are marked with the registration number 0F14480.5 on the nameplate.

Track record

FMP5x is the upgrade model of the corresponding FMP4x series.

Test, Certificate

Feature 580 "Test, Certificate"	Designation	Available for
JA	3.1 Material certificate, wetted metallic parts, EN10204-3.1 inspection certificate	▪ FMP51 ▪ FMP54
JB	Conformity to NACE MR0175, wetted metallic parts	▪ FMP51 ▪ FMP54
JD	3.1 Material certificate, pressurized parts, EN10204-3.1 inspection certificate	FMP52
JE	Conformity to NACE MR0103, wetted metallic parts	▪ FMP51 ▪ FMP54
JF	Conformity to AD2000, wetted metallic parts: Material of all wetted/pressurized parts conform to AD2000 (Technical rules W2, W9, W10)	▪ FMP51 ▪ FMP52 ▪ FMP54
KD	Helium leak test, internal procedure, inspection certificate	▪ FMP51 ▪ FMP54
KE	Pressure test, internal procedure, inspection certificate	▪ FMP51 ▪ FMP52 ▪ FMP54
KG	3.1 Material certificate+PMI test (XRF), internal procedure, wetted metallic parts, EN10204-3.1 inspection certificate	▪ FMP51 ▪ FMP54
KP	Liquid penetrant test AD2000-HP5-3(PT), wetted/pressurized metallic parts, inspection certificate	▪ FMP51 ▪ FMP54
KQ	Liquid penetrant test ISO23277-1 (PT), wetted/pressurized metallic parts, inspection certificate	▪ FMP51 ▪ FMP54
KR	Liquid penetrant test ASME VIII-1 (PT), wetted/pressurized metallic parts, inspection certificate	▪ FMP51 ▪ FMP54
KS	Welding documentation, wetted/pressurized seams consisting of ▪ Drawing ▪ WPQR (Welding Procedure Qualification Report) ▪ WPS (Welding Process Specification) ▪ Manufacturer Declaration	▪ FMP51 ▪ FMP54
KV	Conformity to ASME B31.3: The dimensions, materials of construction, pressure / temperature ratings and identification markings of the device comply with the requirements of ASME B31.3	▪ FMP51 ▪ FMP52 ▪ FMP54

Other standards and guidelines	▪ EN 60529 Degrees of protection by housing (IP code) ▪ EN 61010-1 Protection Measures for Electrical Equipment for Measurement, Control, Regulation and Laboratory Procedures. ▪ IEC/EN 61326 "Emission in accordance with Class A requirements". Electromagnetic compatibility (EMC requirements) ▪ NAMUR NE 21 Electromagnetic compatibility (EMC) of industrial process and laboratory control equipment. ▪ NAMUR NE 43 Standardization of the signal level for the breakdown information of digital transmitters with analog output signal. ▪ NAMUR NE 53 Software of field devices and signal-processing devices with digital electronics ▪ NAMUR NE 107 Status classification as per NE107 ▪ NAMUR NE 131 Requirements for field devices for standard applications ▪ IEC61508 Functional safety of electrical/electronic/programmable electronic safety-related systems

Ordering information

Ordering information

Detailed ordering information is available from the following sources:

- In the Product Configurator on the Endress+Hauser web site: www.endress.com → Choose your country → Products → Select measuring technology, software or components → Select product (picklists: measurement method, product family etc.) → Device support (right-hand column): Configure the selected product → The Product Configurator for the selected product is opened.
- From your Endress+Hauser Sales Center: www.addresses.endress.com

Product Configurator - the tool for individual product configuration

- Up-to-the-minute configuration data
- Depending on the device: Direct input of measuring point-specific information such as measuring range or operating language
- Automatic verification of exclusion criteria
- Automatic creation of the order code and its breakdown in PDF or Excel output format
- Ability to order directly in the Endress+Hauser Online Shop

3-point linearity protocol

The following notes must be taken into account if option F3 ("3 point linearity protocol") has been selected in feature 550 ("Calibration").

Depending on the probe the 3 points of the linearity protocol are defined as follows:

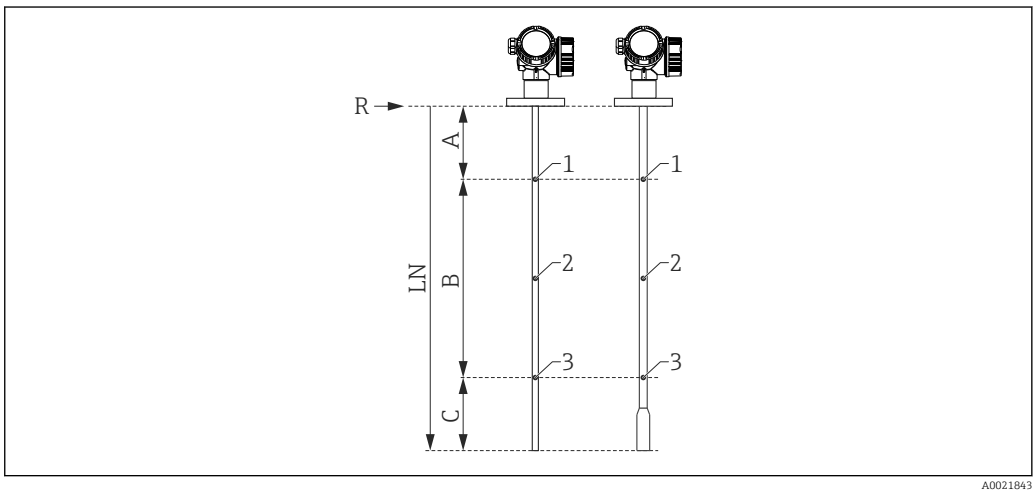

A0021843

A *Distance from reference point R to first measuring point*
B *Measuring range*
C *Distance from end of probe to third measuring point*
LN *Length of probe*
R *Reference point of the measurement*
1 *First measuring point*
2 *Second measuring point (centrally between first and third measuring point)*
3 *Third measuring point*

	Rod or coax probe [1)] LN ≤ 6 m (20 ft)	Divisible rod probe LN > 6 m (20 ft)	Rope probe LN ≤ 6 m (20 ft)	Rope probe LN > 6 m (20 ft)
Position of 1st measuring point	▪ FMP51/FMP52/FMP54 withoput gas phase compensation/ FMP55: A = 350 mm (13.8 in) ▪ FMP54 with gas phase compensation, L_{ref} = 300 mm (11 in): A = 600 mm (23.6 in) ▪ FMP54 with gas phase compensation, L_{ref} = 550 mm (21 in): A = 850 mm (33.5 in)		A = 350 mm (13.8 in)	A = 350 mm (13.8 in)
Position of 2nd measuring point	centrally between 1st and 3rd measuring point	centrally between 1st and 3rd measuring point	centrally between 1st and 3rd measuring point	centrally between 1st and 3rd measuring point
Position of 3rd measuring point	measured from the bottom end of the probe: C = 250 mm (9.84 in)	measured from the top end of the probe: A+B = 5 750 mm (226 in)	measured from the bottom end of the probe: C = 500 mm (19.7 in)	measured from the top end of the probe: A+B = 5 500 mm (217 in)
Minimum measuring range	B ≥ 400 mm (15.7 in)	B ≥ 400 mm (15.7 in)	B ≥ 400 mm (15.7 in)	B ≥ 400 mm (15.7 in)
Minimum length of probe	LN ≥ 1 000 mm (39.4 in)	LN ≥ 1 000 mm (39.4 in)	LN ≥ 1 250 mm (49.2 in)	LN ≥ 1 250 mm (49.2 in)

1) also valid for divisible rods

The position of the measuring points may vary by ±1 cm (±0.04 in).

- For rod and rope probes the linearity check is performed with the complete device.
- For divisible rod probes a reference probe is used instead of the original one.
- For coax probes the electronics is mounted to a reference rod probe and the linearity check is performed to this configuration.
- The linearity is checked under reference conditions.

5-point linearity protocol

The following notes must be taken into account if option F4 ("5 point linearity protocol") has been selected in feature 550 ("Calibration").

The five points of the linearity protocol are evenly distributetd across the measuring range (0% to 100%). In order to define the measuring range, **Empty calibration** (E) and **Full calibration** (F) have to be specified [11].

The following restrictions have to be taken into account when defining E and F:

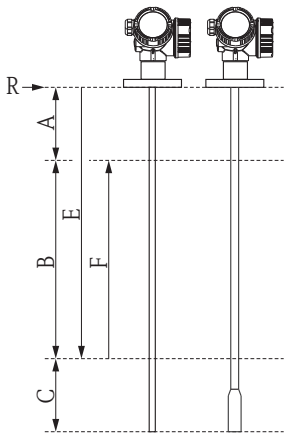

A0014673

Sensor	Minimum distance between reference point (R) and 100% level	Minimum measuring range
FMP51	A ≥ 250 mm (10 in)	B ≥ 400 mm (16 in)
FMP51 Rope probe with center rod, max. 300 mm (12 in) nozzle height [1]	A ≥ 350 mm (14 in)	B ≥ 400 mm (16 in)
FMP52	A ≥ 250 mm (10 in)	B ≥ 400 mm (16 in)
FMP52 Rope probe with center rod, max. 300 mm (12 in) nozzle height [2]	A ≥ 350 mm (14 in)	B ≥ 400 mm (16 in)
FMP54 w/o gas phase compensation	A ≥ 250 mm (10 in)	B ≥ 400 mm (16 in)
FMP54 with gas phase compensation, L_{ref} = 300 mm	A ≥ 450 mm (18 in)	B ≥ 400 mm (16 in)
FMP54 with gas phase compensation, L_{ref} = 550 mm	A ≥ 700 mm (28 in)	B ≥ 400 mm (16 in)

1) Product structure: Feature 060 "Probe", Option MB or MD
2) Product structure: Feature 060 "Probe", Option OB or OD

11) If E and F are not specified, probe dependent default values will be used instead.

Type of probe	Minimum distance from end of probe to 0% level	Maximum value for "empty calibration"
Rod (not divisible)	C ≥ 100 mm (4 in)	E ≤ 3.9 m (12.8 ft)
▪ Coax ▪ Rod (divisible)	C ≥ 100 mm (4 in)	E ≤ 5.9 m (19.4 ft)
Rope	C ≥ 1 000 mm (40 in)	E ≤ 23 m (75 ft)

- For rod and rope probes the linearity check is performed with the complete device.
- For coax probes the electronics is mounted to a reference rod probe and the linearity check is performed to this configuration.
- The linearity is checked under reference conditions.

The selected values of **Empty calibration** and **Full calibration** are only used to record the linearity protocol and are reset to their probe specific default values thereafter. If values different from the default are required, they must be ordered as a customized parametrization → 114.

Customized parametrization

If the option IJ "Customized parametrization HART", IK "Customized parametrization PA" or IL "Customized parametrization FF" has been selected in feature 570 "Service", customer specific presettings can be selected for the following parameters:

Parameter	Communication	Selection list / range of values
Setup → Distance unit	▪ HART ▪ PA ▪ FF	▪ in ▪ mm
Setup → Empty calibration	▪ HART ▪ PA ▪ FF	0 to 45 m (0 to 147 ft)
Setup → Full calibration	▪ HART ▪ PA ▪ FF	0 to 45 m (0 to 147 ft)
Setup → Adv. Setup → Current output 1/2 → Damping	HART	0 to 999.9 s
Setup → Adv. Setup → Current output 1/2 → Failure mode	HART	▪ Min ▪ Max ▪ Last valid value
Setup → Adv. Setup → Current output 1/2 → Burst mode	HART	▪ Off ▪ On

Accessories

Device-specific accessories **Weather protection cover**

Accessory	Description
Weather protection cover	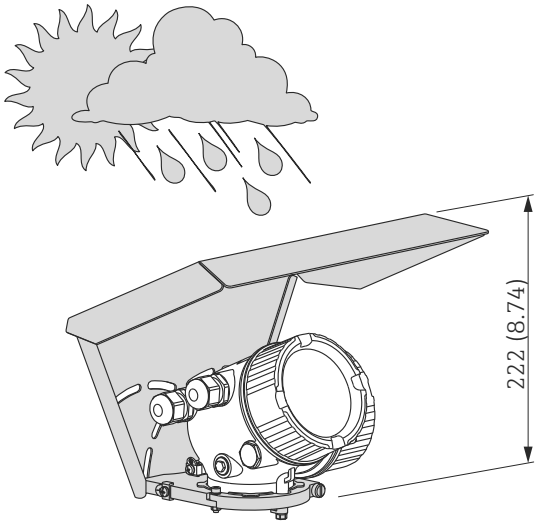 A0015466 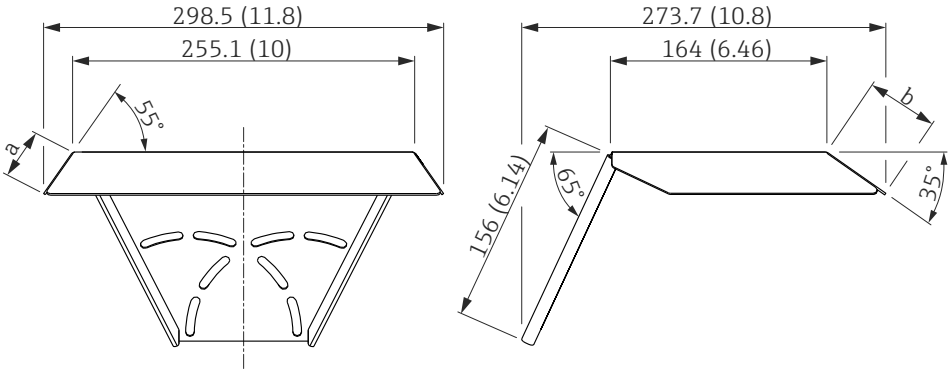 A0015472 *38 Weather protection cover; Dimensions: mm (in)* *a 37,8 mm (1,5 in)* *b 54 mm (2,1 in)* The weather protection cover can be ordered together with the device (product structure, feature 620 "Accessory Enclosed", option PB "Weather Protection Cover"). Alternatively, it can be separately ordered as an accessory; order code 71162242.

Mounting bracket for the electronics housing

Accessory	Description
Mounting bracket for the electronics housing	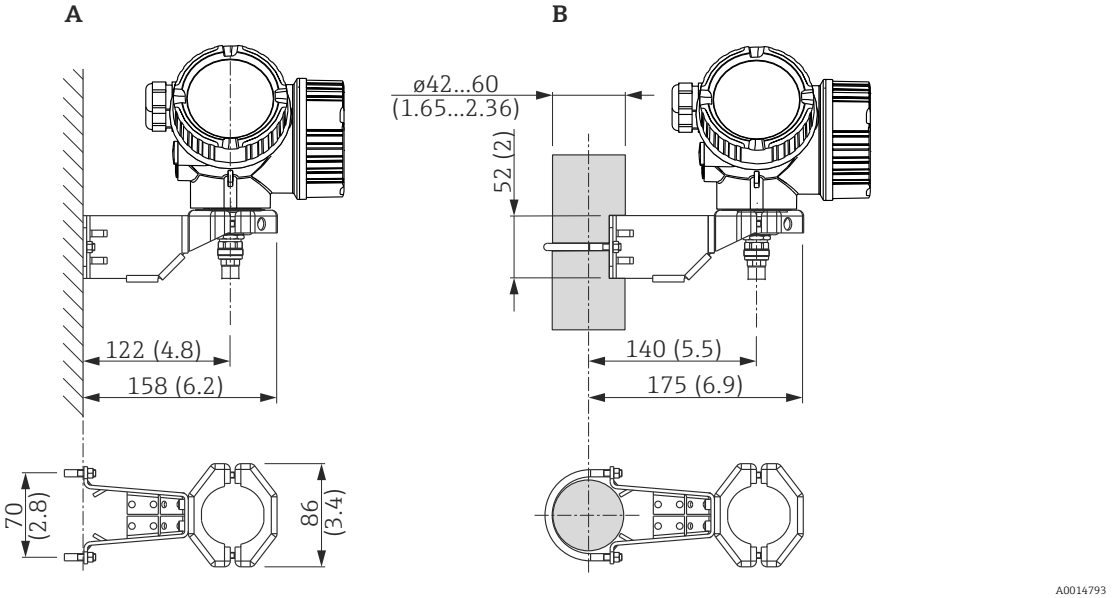 *39 Mounting bracket for the electronics housing; Dimensions: mm (in)* *A Wall mounting* *B Pipe mounting* For the "Sensor remote" device version (see feature 060 of the product structure), the mounting bracket is part of the delivery. If required, it can also be ordered as an accessory (order code 71102216).

Extension rod / centering HMP40

Accessory	Description
Extension rod / centering HMP40 ▪ can be used for: FMP54 ▪ Admissible temperature at lower nozzle edge: – without center washer: no limitation – with center washer: -40 to 150 °C (-40 to 302 °F) ▪ Additional information: SD01002F	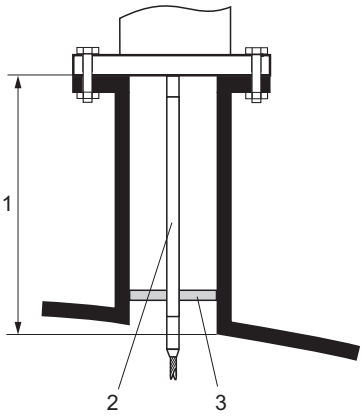 *1 Nozzle height* *2 Extension rod* *3 Center washer*

010	**Approval:**
A	A: Non-hazardous area
M	M: FM DIP Cl.II Div.1 Gr.E-G N.I., zone 21,22
P	P: CSA DIP Cl.II Div.1 Gr.G + coal dust N.I.
S	S: FM Cl.I, II, III Div.1 Gr.A-G N.I., zone 0,1,2,20,21,22
U	U: CSA Cl.I, II, III Div.1 Gr.A-G N.I., zone 0,1,2
1	1: ATEX II 1G
2	2: ATEX II 1D

020	**Extension rod; nozzle height:**
1	115mm; 150-250mm / 6-10"
2	215mm; 250-350mm / 10-14"
3	315mm; 350-450mm / 14-18"
4	415mm; 450-550mm / 18-22"
9	Special version, TSP-no. to be spec.

030	**Center washer:**
A	Not selected
B	DN40 / 1-1/2", inside-d. = 40-45mm, PPS
C	DN50 / 2", inside-d. = 50-57mm, PPS
D	DN80 / 3", inside-d. = 80-85mm, PPS
E	DN80 / 3", inside-d. = 76-78mm, PPS
G	DN100 / 4", inside-d. = 100-110mm, PPS
H	DN150 / 6", inside-d. = 152-164mm, PPS
J	DN200 / 8", inside-d. = 210-215mm, PPS
K	DN250 / 10", inside-d. = 253-269mm, PPS
Y	Special version, TSP-no. to be spec.

Mounting kit, isolated

Accessory	Description
Mounting kit, isolated can be used for ▪ FMP50 ▪ FMP51 ▪ FMP54 ▪ FMP56 ▪ FMP57	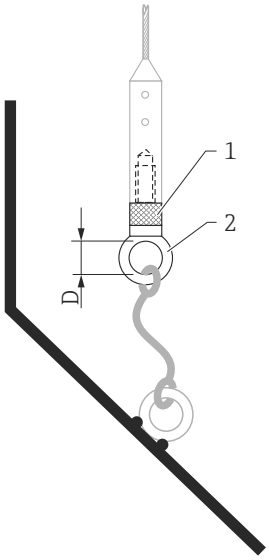 *40 Scope of supply of the mounting kit:* *1 Insulating sleeve* *2 Eye-bolt* For reliably insulated fixing of the probe. Maximum process temperature: 150 °C (300 °F) For rope probes 4 mm (⅙ in) or 6 mm (1/4 in) with PA>steel: ▪ Diameter D = 20 mm (0.8 in) ▪ Order-No.: 52014249 For rope probes 6 mm (¼ in) or 8 mm (1/3 in) with PA>steel: ▪ Diameter D = 25 mm (1 in) ▪ Order-No.: 52014250 Due to the risk of electrostatic charge, the insulating sleeve is not suitable for use in hazardous areas. In these cases the fixing must be reliably grounded. The mounting kit can also be ordered directly with the device (see the Levelflex product structure, feature 620 "Accessory Enclosed", option PG "Mounting kit, isolated, rope").

Centering star

Accessory	Description
Centering star PEEK ⌀ 48 to 95 mm (1.89 to 3.74 inch) can be used for ▪ FMP51 ▪ FMP54	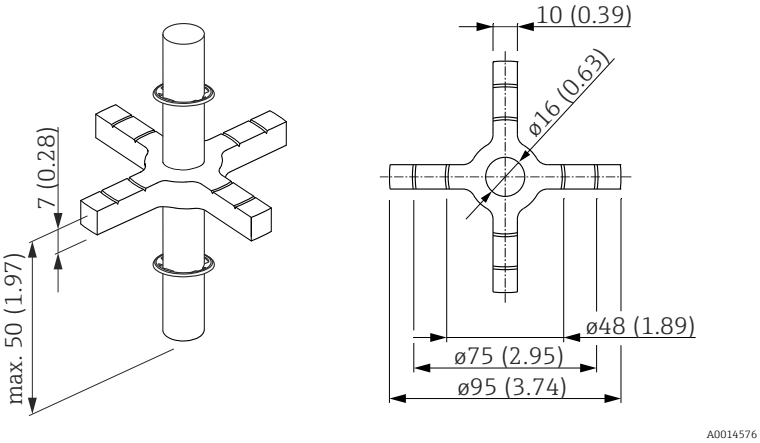 The centering star is suitable for probes with a rod diameter of 16 mm (0.6 in) and can be used in pipes from DN40 (1½") up to DN100 (4"). Markings on the 4-leg centering star ensure a simple tailoring. Hence the centering star can be adapted to the pipe diameter. See also Operating Instructions BA00377F/00/A2. ▪ Material of centering star: PEEK (statically dissipative) ▪ Material of retaining rings: PH15-7Mo (UNS S15700) ▪ Admissible process temperature: −60 to +200 °C (−76 to +392 °F) ▪ Order code: 71069064 ℹ If the centering star is inserted in a bypass, it must be positioned below the lower bypass outlet. This has to be accounted for when choosing the probe length. Generally, the centering star should not be mounted higher than 50 mm (1.97") from the probe end. It is recommended not to insert the PEEK centering star in the measuring range of the rod probe. ℹ The PEEK centering star can also be ordered directly with the device (see the Levelflex product structure, feature 610 "Accessory mounted", option OD). In this case it is not fastened by the retaining rings. Instead it is fixed to the end of the probe rod by a hexagonal headed bolt (A4-70) and a Nord-Lock washer (1.4547).

Accessory	Description
Centering star PFA ▪ ϕ 16.4 mm (0.65 in) ▪ ϕ 37 mm (1.46 in) can be used for ▪ FMP51 ▪ FMP52 ▪ FMP54	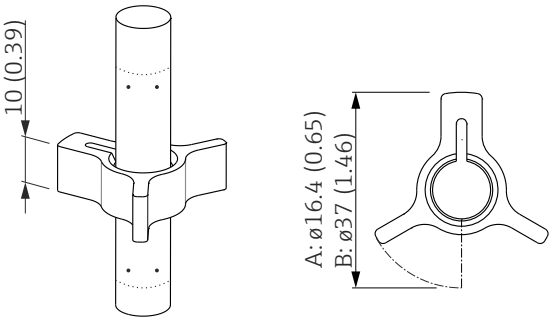 A0014577 *A For 8 mm (0.3 in) probes* *B: For 12 mm (0.47 in) and 16 mm (0.63 in) probes* The centering star is suitable for probes with a rod diameter of 8 mm (0.3 in), 12 mm (0.47 in) and 16 mm (0.63 in) (also coated rod probes) and can be used in pipes from DN40 (1½") up to DN50 (2"). See also Operating Instructions BA00378F/00/A2. ▪ Material: PFA ▪ Admissible process temperature: −200 to +200 °C (−382 to +392 °F) ▪ Order code – Probe 8 mm (0.3 in): 71162453 – Probe 12 mm (0.47 in): 71157270 – Probe 16 mm (0.63 in): 71069065 The PFA centering star can also be ordered directly with the device (see the Levelflex product structure, feature 610 "Accessory mounted", option OE).

Remote display FHX50

Accessory	Description
Remote display FHX50	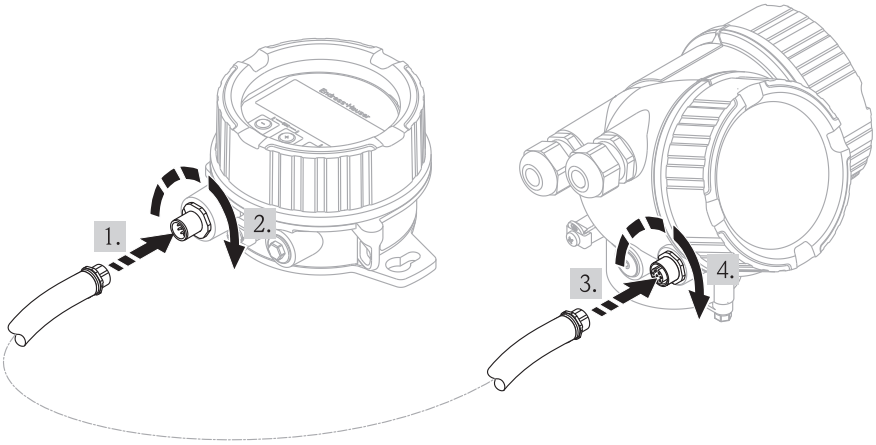 A0019128 ▪ Material: – Plastics PBT – 316L ▪ Ingress protection: IP68 / NEMA 6P and IP66 / NEMA 4x ▪ Suitable for the display modules: – SD02 (push buttons) – SD03 (touch control) ▪ Connection cable: – Cable with M12 plug; supplied with the FHX50; up to 30 m (98 ft) – Customer supplied standard cable; up to 60 m (196 ft) ▪ Ambient temperature: −40 to 80 °C (−40 to 176 °F) ▪ If the remote display is to be used, the device must be ordered in the version "Prepared for display FHX50" (feature 030, option L or M). For the FHX50, on the other hand, the option A: "Prepared for display FHX50" has to be selected in feature 050: "Option Measurement Device". ▪ If a device has not been ordered in the version "Prepared for display FHX50", but is nevertheless to be equipped with an FHX50, it is essential to select the option B: "Not prepared for display FHX50" in feature 050: "Option Measurement Device" of the FHX50. In this case, a retrofit kit, needed to prepare the device for the remote display, is supplied together with the FHX50. For transmitters with approval, application of the FHX50 may be restricted. A device may only be retrofitted with the FHX50 if option L or M ("Prepared for FHX50") is quoted under *Basic specifications*, position 4 "Display, operation" in the associated Safety Instructions (XA). In addition to this, observe the Safety Instructions (XA) of the FHX50. Do not retrofit transmitters with: ▪ approval for use in areas with combustible dusts (Dust-Ex approval) ▪ type of protection Ex nA For details refer to the document SD01007F.

Overvoltage protection

Accessory	Description
Overvoltage protection for 2-wire-devices OVP10 (1 channel) OVP20 (2 channel)	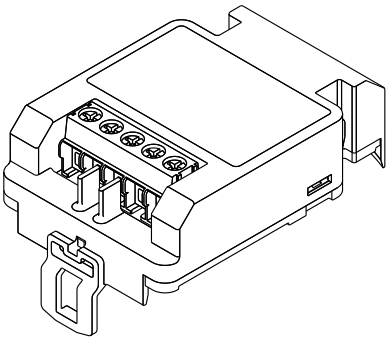 A0021734 **Technical data** ▪ Resistance per channel: 2 * 0.5 Ω_{max} ▪ Threshold DC voltage: 400 to 700 V ▪ Threshold impulse voltage: < 800 V ▪ Capacitance at 1 MHz: < 1.5 pF ▪ Nominal arrest impulse voltage (8/20 µs): 10 kA ▪ Suited for wire cross-sections: 0.2 to 2.5 mm^2 (24 to 14 AWG) **Ordering with device** The overvoltage protection module is preferably ordered with the device. See product structure, feature 610 "Accessory mounted", option NA "Overvoltage protection". Separate ordering of the module is only necessary if a device is to retrofitted with the overvoltage protection. **Order code for retrofitting** ▪ For 1-channel devices (feature 020, option A) OVP10: 71128617 ▪ For 2-channel devices (feature 020, option B, C, E or G) OVP20 : 71128619 **Hosuing lid for retrofitting** In order to keep the necessary safety distances, the housing lid needs to be replaced if the device is retrofitted with the overvoltage protection. Depending on the housing type, the order code of the suitable lid is as follows: ▪ GT18 housing: Lid 71185516 ▪ GT19 housing: Lid 71185518 ▪ GT20 housing: Lid 71185516 **Restrictions for retrofitting** Depending on the approval of the transmitter the usage of the OVP module may be restricted. A device may only be retrofitted with an OVP module if the option *NA* (overvoltage protection) is quoted unter *Optional Specifications* in the Safety Instructions (XA) pertaining to the device. For details refer to SD01090F.

Communication-specific accessories

Accessory	Description
Commubox FXA195 HART	For intrinsically safe HART communication with FieldCare via the USB interface. For details refer to Technical Information TI00404F

Accessory	Description
Commubox FXA291	Connects Endress+Hauser field devices with CDI interface (= Endress+Hauser Common Data Interface) to the USB interface of a computer. Order code: 51516983 For details refer to Technical Information TI00405C

Accessory	Description
HART Loop Converter HMX50	Evaluates the dynamic HART variables and converts them to analog current signals or limit values. Order code: 71063562 For details refer to Technical Information TI00429F and Operating Instructions BA00371F

Accessory	Description
WirelessHART Adapter SWA70	Connects field devices to a WirelessHART network. The WirelessHART adapter can be mounted directly at a HART device and is easly integrated into an existing HART network. It ensures safe data transmission and can be operated in parallel with other wireless networks. For details refer to Operating Instructions BA00061S

Accessory	Description
Fieldgate FXA320	Gateway for remote monitoring of connected 4-20mA measuring devices via web browser. For details refer to Technical Information TI00025S and Operating Instructions BA00053S

Accessory	Description
Fieldgate FXA520	Gateway for remote diagnosis and parametrization of connected HART measuring devices via web browser. For details refer to Technical Information TI00025S and Operating Instructions BA00051S

Accessory	Description
Field Xpert SFX350	Field Xpert SFX350 is a mobile computer for commissioning and maintenance. It enables efficient device configuration and diagnostics for HART and FOUNDATION fieldbus devices in the **non-Ex area**. For details, see Operating Instructions BA01202S

Accessory	Description
Field Xpert SFX370	Field Xpert SFX370 is a mobile computer for commissioning and maintenance. It enables efficient device configuration and diagnostics for HART and FOUNDATION fieldbus devices in the **non-Ex area** and the **Ex area**. For details, see Operating Instructions BA01202S

Service-specific accessories

Accessory	Description
FieldCare	Endress+Hauser's FDT-based Plant Asset Management tool. Helps to configure and maintain all field devices of your plant. By supplying status information it also supports the diagnosis of the devices. For details refer to Operating Instructions BA00027S and BA00059S.

System components

Accessory	Description
Graphic Data Manager Memograph M	The graphic data manager Memograph M provides information on all the relevant process variables. Measured values are recorded correctly, limit values are monitored and measuring points analyzed. The data are stored in the 256 MB internal memory and also on an SD card or USB stick. For details refer to Technical Information TI00133R and Operating Instructions BA00247R
RN221N	Active barrier with power supply for safe separation of 4 to 20 mA current circuits. Provides bi-directional HART transmission. For details refer to Technical Information TI00073R and Operating Instructions BA00202R
RNS221	Transmitter supply for 2-wire sensors or transmitters exclusively for non-Ex areas. Provides bi-directional communication using the HART communication sockets. For details refer to Technical Information TI00081R and Operating Instructions KA00110R

Documentation

For an overview of the scope of the associated Technical Documentation, refer to the following:
- The *W@M Device Viewer* : Enter the serial number from the nameplate (www.endress.com/deviceviewer)
- The *Endress+Hauser Operations App*: Enter the serial number from the nameplate or scan the 2-D matrix code (QR code) on the nameplate.

Standard documentation

Levelflex FMP51, FMP52, FMP54

Correlation of documentations to the device:

Device	Power supply, output	Communication	Document type	Document code
FMP51, FMP52, FMP54	A, B, C, K, L	HART	Technical Information	TI01001F
			Operating Instructions	BA01001F
			Brief Operating Instructions	KA01077F
			Description of Device Parameters	GP01000F
	G	PROFIBUS PA	Technical Information	TI01001F
			Operating Instructions	BA01006F
			Brief Operating Instructions	KA01079F
			Description of Device Parameters	GP01001F
	E	FOUNDATION Fieldbus	Technical Information	TI01001F
			Operating Instructions	BA01052F
			Brief Operating Instructions	KA01107F
			Description of Device Parameters	GP01015F

Supplementary documentation

Device	Document type	Document code
Fieldgate FXA520	Technical Information	TI369F
Tank Side Monitor NRF590	Technical Information	TI402F
	Operating Instructions	BA256F
	Description of Device Parameters	BA257F

Description	Document type	Document code
Continuous level measurement in liquids and bulk solids Selection and engineering guide for the process industry	Competence brochure	CP00023F
Planning instructions for steam boiler approval For Levelflex M FMP45 and Levelflex FMP54	Special documentation	SD01071F

Safety documentation

Safety Instructions (XA)

Depending on the approval, the following Safety Instructions (XA) are supplied with the device. They are an integral part of the Operating Instructions.

Feature 010	Approval	Available for	Feature 020: "Power Supply; Output"				
			A [1]	B [2]	C [3]	E [4]/G [5]	K [6]/L [7]
BA	ATEX II 1G Ex ia IIC T6 Ga	▪ FMP51 ▪ FMP52 ▪ FMP54	XA00496F	XA01125F	XA01126F	XA00516F	-
BB	ATEX II 1/2G Ex ia IIC T6 Ga/Gb	▪ FMP51 ▪ FMP52 ▪ FMP54	XA00496F	XA01125F	XA01126F	XA00516F	-
BC	ATEX II 1/2G Ex d[ia] IIC T6 Ga/Gb	▪ FMP51 ▪ FMP52 ▪ FMP54	XA00499F	XA00499F	XA00499F	XA00519F	XA01133F
BD	ATEX II 1/3G Ex ic[ia] IIC T6 Ga/Gc	▪ FMP51 ▪ FMP52 ▪ FMP54	XA00497F	XA01127F	XA01128F	XA00517F	-
BE	ATEX II 1D Ex t IIIC Da	FMP54	XA00501F	XA00501F	XA00501F	XA00521F	XA00501F
BF	ATEX II 1/2D Ex t IIIC Da/Db	FMP54	XA00501F	XA00501F	XA00501F	XA00521F	XA00501F
BG	ATEX II 3G Ex nA IIC T6 Gc	▪ FMP51 ▪ FMP52 ▪ FMP54	XA00498F	XA01130F	XA01131F	XA00518F	XA01132F
BH	ATEX II 3G Ex ic IIC T6 Gc	▪ FMP51 ▪ FMP52 ▪ FMP54	XA00498F	XA01130F	XA01131F	XA00518F	-
BL	ATEX II 1/3G Ex nA[ia] IIC T6 Ga/Gc	▪ FMP51 ▪ FMP52 ▪ FMP54	XA00497F	XA01127F	XA01128F	XA00517F	XA01129F
B2	ATEX II 1/2G Ex ia IIC T6 Ga/Gb, 1/2D Ex ia IIIC Da/Db	▪ FMP51 ▪ FMP52 ▪ FMP54	XA00502F	XA00502F	XA00502F	XA00522F	-
B3	ATEX II 1/2G Ex d[ia] IIC T6 Ga/Gb, 1/2 D Ex t IIIC Da/Db	▪ FMP51 ▪ FMP52 ▪ FMP54	XA00503F	XA00503F	XA00503F	XA00523F	XA01136F
B4	ATEX II 1/2G Ex ia IIC T6 Ga/Gb, Ex d[ia] IIC T6 Ga/Gb	▪ FMP51 ▪ FMP52 ▪ FMP54	XA00500F	XA01134F	XA01135F	XA00520F	-
CD	CSA C/US DIP Cl.II,III Div.1 Gr.E-G	FMP54	XA00529F	XA00529F	XA00529F	XA00570F	XA00529F
C2	CSA C/US IS Cl.I,II,III Div.1 Gr.A-G, NI Cl.1 Div.2, Ex ia	▪ FMP51 ▪ FMP52 ▪ FMP54	XA00530F	XA00530F	XA00530F	XA00571F	XA00530F
C3	CSA C/US XP Cl.I,II,III Div.1 Gr.A-G, NI Cl.1 Div.2, Ex d	▪ FMP51 ▪ FMP52 ▪ FMP54	XA00529F	XA00529F	XA00529F	XA00570F	XA00529F
FB	FM IS Cl.I,II,III Div.1 Gr.A-G, AEx ia, NI Cl.1 Div.2	▪ FMP51 ▪ FMP52 ▪ FMP54	XA00531F	XA00531F	XA00531F	XA00573F	XA00531F
FD	FM XP Cl.I,II,III Div.1 Gr.A-G, AEx d, NI Cl.1 Div.2	▪ FMP51 ▪ FMP52 ▪ FMP54	XA00532F	XA00532F	XA00532F	XA00572F	XA00532F
FE	FM DIP Cl.II,III Div.1 Gr.E-G	FMP54	XA00532F	XA00532F	XA00532F	XA00572F	XA00532F
IA	IEC Ex ia IIC T6 Ga	▪ FMP51 ▪ FMP52 ▪ FMP54	XA00496F	XA01125F	XA01126F	XA00516F	-

Feature 010	Approval	Available for	Feature 020: "Power Supply; Output"				
			A [1]	B [2]	C [3]	E [4]/G [5]	K [6]/L [7]
IB	IEC Ex ia IIC T6 Ga/Gb	▪ FMP51 ▪ FMP52 ▪ FMP54	XA00496F	XA01125F	XA01126F	XA00516F	-
IC	IEC Ex d[ia] IIC T6 Ga/Gb	▪ FMP51 ▪ FMP52 ▪ FMP54	XA00499F	XA00499F	XA00499F	XA00519F	XA01133F
ID	IEC Ex ic[ia] IIC T6 Ga/Gc	▪ FMP51 ▪ FMP52 ▪ FMP54	XA00497F	XA01127F	XA01128F	XA00517F	-
IE	IEC Ex t IIIC Da	FMP54	XA00501F	XA00501F	XA00501F	XA00521F	XA00501F
IF	IEC Ex t IIIC Da/Db	FMP54	XA00501F	XA00501F	XA00501F	XA00521F	XA00501F
IG	IEC Ex nA IIC T6 Gc	▪ FMP51 ▪ FMP52 ▪ FMP54	XA00498F	XA01130F	XA01131F	XA00518F	XA01132F
IH	IEC Ex ic IIC T6 Gc	▪ FMP51 ▪ FMP52 ▪ FMP54	XA00498F	XA01130F	XA01131F	XA00518F	-
IL	IEC Ex nA[ia] IIC T6 Ga/Gc	▪ FMP51 ▪ FMP52 ▪ FMP54	XA00497F	XA01127F	XA01128F	XA00517F	XA01129F
I2	IEC Ex ia IIC T6 Ga/Gb, Ex ia IIIC Da/Db	▪ FMP51 ▪ FMP52 ▪ FMP54	XA00502F	XA00502F	XA00502F	XA00522F	-
I3	IEC Ex d [ia] IIC T6 Ga/Gb, Ex t IIIC Da/Db	▪ FMP51 ▪ FMP52 ▪ FMP54	XA00503F	XA00503F	XA00503F	XA00523F	XA01136F
KA	KC Ex ia IIC T6 Ga	▪ FMP51 ▪ FMP52 ▪ FMP54	XA01169F	-	XA01169F	-	-
KB	KC Ex ia IIC T6 Ga/Gb	▪ FMP51 ▪ FMP52 ▪ FMP54	XA01169F	-	XA01169F	-	-
KC	KC Ex d[ia] IIC T6	▪ FMP51 ▪ FMP52 ▪ FMP54	-	-	XA01170F	-	-
MA	INMETRO Ex ia IIC T6 Ga	▪ FMP51 ▪ FMP52 ▪ FMP54	XA01038F	XA01038F	XA01038F	-	XA01038F
MC	INMETRO Ex d[ia] IIC T6 Ga/Gb	▪ FMP51 ▪ FMP52 ▪ FMP54	XA01041F	XA01041F	XA01041F	-	XA01041F
ME	INMETRO Ex t IIIC Da	FMP54	XA01043F	XA01043F	XA01043F	-	XA01043F
MH	INMETRO Ex ic IIC T6 Gc	▪ FMP51 ▪ FMP52 ▪ FMP54	XA01040F	XA01040F	XA01040F	-	XA01040F
NA	NEPSI Ex ia IIC T6 Ga	▪ FMP51 ▪ FMP52 ▪ FMP54	XA00634F	XA00634F	XA00634F	XA00640F	XA00634F
NB	NEPSI Ex ia IIC T6 Ga/Gb	▪ FMP51 ▪ FMP52 ▪ FMP54	XA00634F	XA00634F	XA00634F	XA00640F	XA00634F
NC	NEPSI Ex d[ia] IIC T6 Ga/Gb	▪ FMP51 ▪ FMP52 ▪ FMP54	XA00636F	XA00636F	XA00636F	XA00642F	XA00636F
NF	NEPSI DIP A20/21 T85...90oC IP66	FMP54	XA00637F	XA00637F	XA00637F	XA00643F	XA00637F

Feature 010	Approval	Available for	Feature 020: "Power Supply; Output"				
			A [1]	B [2]	C [3]	E [4]/G [5]	K [6]/L [7]
NG	NEPSI Ex nA II T6 Gc	▪ FMP51 ▪ FMP52 ▪ FMP54	XA00635F	XA00635F	XA00635F	XA00641F	XA00635F
NH	NEPSI Ex ic IIC T6 Gc	▪ FMP51 ▪ FMP52 ▪ FMP54	XA00635F	XA00635F	XA00635F	XA00641F	XA00635F
N2	NEPSI Ex ia IIC T6 Ga/Gb, Ex iaD 20/21 T85...90°C	▪ FMP51 ▪ FMP52 ▪ FMP54	XA00638F	XA00638F	XA00638F	XA00644F	XA00638F
N3	NEPSI Ex d[ia] IIC T6 Ga/Gb, DIP A20/21 T85...90°C IP66	▪ FMP51 ▪ FMP52 ▪ FMP54	XA00639F	XA00639F	XA00639F	XA00645F	XA00639F
8A	FM/CSA IS+XP Cl.I,II,III Div.1 Gr.A-G	▪ FMP51 ▪ FMP52 ▪ FMP54	XA00531F XA00532F	XA00531F XA00532F	XA00531F XA00532F	XA00572F XA00573F	XA00531F XA00532F

1) A: 2-wire; 4-20mA HART
2) B: 2-wire; 4-20mA HART, switch output
3) C: 2-wire; 4-20mA HART, 4-20mA
4) E: 2-wire; FOUNDATION Fieldbus, switch output
5) G: 2-wire; PROFIBUS PA, switch output
6) K: 4-wire 90-253VAC; 4-20mA HART
7) L: 4-wire 10,4-48VDC; 4-20mA HART

For certified devices the relevant Safety Instructions (XA) are indicated on the nameplate.

Ex-marking in case of connected FHX50 remote display

If the device is prepared for the remote display FHX50 (product structure: feature 030: Display, Operation", option L or M), the Ex marking of some certificates changes according to the following table [12]:

Feature 010 ("Approval")	Feature 030 ("Display, Operation")	Ex-marking
BE	L or M	ATEX II 1D Ex ta [ia] IIIC T_{500} xx°C Da
BF	L or M	ATEX II 1/2 D Ex ta [ia Db] IIIC Txx°C Da/Db
BG	L or M	ATEX II 3G Ex nA [ia Ga] IIC T6 Gc
BH	L or M	ATEX II 3G Ex ic [ia Ga] IIC T6 Gc
B3	L or M	ATEX II 1/2G Ex d [ia] IIC T6 Ga/Gb, ATEX II 1/2D Ex ta [ia Db] IIIC Txx°C Da/Db
IE	L or M	IECEx Ex ta [ia] IIIC T500 xx°C Da
IF	L or M	IECEx ta [ia Db] IIIC Txx°C Da/Db
IG	L or M	IECEx Ex nA [ia Ga] IIC T6 Gc
IH	L or M	IECEx Ex ic [ia Ga] IIC T6 Gc
I3	L or M	IECEx Ex d [ia] IIC T6 Ga/Gb, IECEx Ex ta [ia Db] IIIC Txx°C Da/Db

12) The marking of certificates not mentioned in this table are not affected by the FHX50.

Registered trademarks

HART®
Registered trademark of the HART Communication Foundation, Austin, USA

PROFIBUS®
Registered trademark of the PROFIBUS User Organization, Karlsruhe, Germany

FOUNDATION™ Fieldbus
Registered trademark of the Fieldbus Foundation, Austin, Texas, USA

KALREZ®, VITON®
Registered trademark of DuPont Performance Elastomers L.L.C., Wilmington, USA

TEFLON®
Registered trademark of E.I. DuPont de Nemours & Co., Wilmington, USA

TRI CLAMP®
Registered trademark of Alfa Laval Inc., Kenosha, USA

NORD-LOCK®
Registered trademark of the Nord-Lock International AB

Patents

This product may be protected by at least one of the following patents.

Further patents are pending.

US Patents	EP Patents
5.827.985	---
5.884.231	---
5.973.637	---
6.087.978	955 527
6.140.940	---
6.481.276	---
6.512.358	1 301 914
6.559.657	1 020 735
6.640.628	---
6.691.570	---
6.847.214	---
7.441.454	---
7.477.059	---
---	1 389 337
7.965.087	---

71282391

www.addresses.endress.com

Endress+Hauser

People for Process Automation