General Specifications

YTA710
Temperature Transmitter

YTA Series

GS 01C50G01-01EN

The YTA710 is the highly accurate temperature transmitter that accepts Thermocouple, RTD, ohms or DC millivolts inputs and converts it to a 4 to 20 mA DC or Fieldbus signal for transmission.

The YTA710 supports HART, BRAIN and FOUNDATION Fieldbus communication protocols.
HART type is certified as complying with SIL 2 for safety requirement.

■ FEATURES

High reliability
Dual-compartment housing realizes high resistance capability to harsh environments.

Variety of sensor inputs
The type of sensor input is user-selectable from thermocouples (T/C), RTDs, ohms, or DC millivolts.

Digital communication
HART protocol revision is 7 and FOUNDATION Fieldbus. The instrument configuration can be changed by the user with using the Fieldmate or Handheld terminal.

Local Parameter Setting
Parameter configuration by the push button offers easy and quick setup for parameters.

Self-diagnostics function
Continuous self-diagnostics capability ensures longterm performance and lower cost of ownership.

Dual universal inputs
Dual input can accept two thermocouple, RTD, ohm or DC millivolt inputs. Differential or average temperature measurement is selectable. The sensor backup function for automatically switches-over from the primary to the backup upon sensor failure.

■ STANDARD SPECIFICATIONS

■ PERFORMANCE SPECIFICATIONS

Accuracy
HART and BRAIN communication type:
A/D accuracy/span + D/A accuracy
(See Table 1 on page 4.)
Fieldbus communication type:
A/D accuracy (See Table 1 on page 4.)

Cold Junction Compensation Accuracy (T/C)
±(0.32°C + 0.003 × |Tterm – 23°C|)
Tterm means the terminal temperature (–40°C ≤ Tterm ≤ 85°C).

Ambient Temperature Effect (per 10°C change)
See Table 2 on page 5 for standard type.
See Table 3 on page 7 for /R1 option.

Stability (at 23±2°C)
RTD: ±0.1% of reading or ±0.1°C per 2 years, whichever is greater.
T/C: ±0.1% of reading or ±0.1°C per year, whichever is greater.

5 Year Stability (at 23±2°C)
RTD: ±0.2% of reading or ±0.2°C, whichever is greater.
T/C: ±0.4% of reading or ±0.4°C, whichever is greater.

Vibration Effect
The YTA710 are tested to the following specifications with no effect on performance per IEC 60770-1
10 to 60 Hz : 0.21 mm peak displacement
60 to 2000 Hz : 3G

Power Supply Effect (HART and BRAIN type)
±0.005% of calibrated span per volt

YOKOGAWA
Yokogawa Electric Corporation
2-9-32, Nakacho, Musashino-shi, Tokyo, 180-8750 Japan
Tel.: 81-422-52-5690 Fax.: 81-422-52-2018

GS 01C50G01-01EN
© Copyright May 2016 (YK)
42nd Edition June 2026 (KP)

■ FUNCTIONAL SPECIFICATIONS

Input Signals
Input number: single and dual input
Input type is selectable: Thermocouples, 2-, 3-, and 4-wire RTDs, ohms and DC millivolts.
See Table 1. on page 4.

Input Signal Source Resistance (for T/C, mV)
1 kΩ or lower

Input Lead Wire Resistance (for RTD, ohm)
10 Ω per wire or lower

Span & Range Limits
See Table 1. on page 4.

Output signals

Two wire 4 to 20 mA DC type
Output range: 3.68 to 20.8 mA DC
HART or BRAIN protocol is superimposed on the 4 to 20 mA signal.

Fieldbus type
Output signal based on FOUNDATION Fieldbus communication protocol.

Isolation
Input/Output/GND isolated to 500V DC
Except lightning protector option.

Manual Test Output Function
The output value can be set manually.

Sensor Burnout (HART and BRAIN type)
High (21.6 mA DC) or Low (3.6 mA DC), user selectable.

Output in Transmitter Failure (HART and BRAIN type)
Down-scale: –5%, 3.2 mA DC or less (Optional code C1 or C2)
Up-scale: 110%, 21.6 mA DC or more (Standard or Optional code C3)

Update Time (HART and BRAIN type)
Approximately 0.5 seconds for a single sensor (0.8 second for dual sensors)

Turn-on Time (HART and BRAIN type)
Approximately 6 seconds for a single sensor (7 seconds for dual sensors)

Damping Time Constant
Selectable from 0 to 100 seconds

Self-Diagnostics
Self-diagnostic function based on the NAMUR NE107 standard detects failures.

Hardware-Diagnostics
Hardware failure: Detect faiures in CPU, ADC, Memory, etc.

Sensor-Diagnostics
Sensor failure: Detect the disconnection of sensor.
Sensor short: Detect the short circuit of the sensor.
Sensor Corrosion: Measure the loop resistance.
Sensor line information: Measure the line resistance.
Sensor drift: Detect the difference between sensor1 and sensor2.
Temperature Cycle Diagnostics: Count the number of temperature fluctuations.

Fieldbus functions (Fieldbus type)
Functional specifications for Fieldbus communication conform to the standard specifications (H1) of FOUNDATION Fieldbus.

Function Block (Fieldbus type)

Resource block
The resource block contains physical transmitter information.

Transducer block
The transducer block contains the actual measurement data and information about sensor type and configuration and diagnostics.

LCD display block
The LCD display block is used to configure the local display, if an LCD display is being used.

Analog input (AI)
Four independent AI blocks can be selected.

Digital input (DI)
Four DI function blocks can be used as a limit switch for those temperature.

Other function block
As other Function blocks, Arithmetic (AR), Signal Characterizer (SC), Input Selector (IS), and two PID function blocks are available.

Function block	Execution time (ms)
AI	30
DI	30
SC	30
IS	30
AR	30
PID	45

Link master function
This function enables backup of network manager and local control only by field devices.

Alarm function
Fieldbus models securely support various alarm functions, such as High/Low alarm, notice of block error, etc. based on FOUNDATION Fieldbus specifications.

Software download function
This function permits to update YTA software via a FOUNDATION Fieldbus.
Based on FOUNDATION Fieldbus specifications (FF883)
Download class: Class 1

EMC Conformity Standards
EN61326-1 Class A, Table2
EN61326-2-3
EN61326-2-5 (for fieldbus type)

Functional Safety (HART type)
Hart type certified in compliance with IEC 61508: 2010.
Functional Safety of Electrical/electronic/ Programmable electronic related systems;
One input(either sensor1 or sensor2)
SIL 2 capability for single transmitter use
SIL 3 capability for dual transmitter use
Refer to “Appendix A” of IM01C50T01-02EN for cautions.
Ambient Temperature Limits
–40 to 85°C (–40 to 185°F)
–30 to 80°C (–22 to 176°F) (with indicator model)

All Rights Reserved. Copyright © 2016, Yokogawa Electric Corporation

Safety Requirement Standards
EN61010-1, C22.2 No.61010-1
- Installation category: I
  (Anticipated transient overvoltage 330 V)
- Pollution degree: 2
- Indoor/Outdoor use

EN IEC 61010-2-030, C22.2 No.61010-2-030
- Measurement category: O (Other)
  (Measurement Input voltage: 150mVdc max)

EU RoHS Directive
Applicable standard: EN IEC 63000

■ NORMAL OPERATING CONDITION

(Optional features or approval codes may affect limits.)

Ambient Temperature Limits
–40 to 85°C (–40 to 185°F)
–30 to 80°C (–22 to 176°F) (with indicator model)

Ambient Humidity Limits
0 to 100% RH at 40°C (104°F)

Supply Voltage Requirements

HART and BRAIN type
10.5 to 42 V DC for general use and flameproof type
10.5 to 32 V DC for lightning protector (option code /A)
10.5 to 30 V DC for intrinsically safe and non-incendive type
Minimum voltage limited at 16.6 V DC for digital communications HART
With 24 V DC supply, up to a 550Ω load can be used. See graph below.

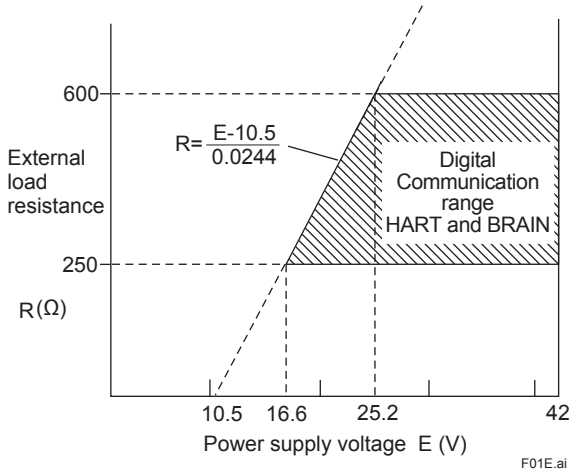

Figure 1. Relationship Between Power Supply Voltage and External Load Resistance

Fieldbus type
9 to 32V DC for general use, flameproof type, and non-incendive type
9 to 30 V DC for intrinsically safe type
9 to 17.5 V DC for FISCO field device
Communication Requirements
Supply Voltage: 9 to 32 V DC
Current Draw:
Steady state: 15 mA (max)
Software download state: 24 mA (max)

Communication Requirements (BRAIN type)
Communication Distance
Up to 2 km (1.25 miles) when using CEV polyethylene-insulated PVC-sheathed cables. Communication distance varies depending on type of cable used.
Load Capacitance
0.22 μF or less
Load Inductance
3.3 mH or less
Input Impedance of communicating device
10 kΩ or more at 2.4 kHz.

Load Requirements (HART and BRAIN type)
0 to 1290Ω for operation
250 to 600Ω for digital communication

■ PHYSICAL SPECIFICATIONS

Enclosure

Material & coating
- Low copper cast aluminum alloy
  [for aluminum housing]
  Polyester powder coating
  Mint-green paint (Munsell 5.6BG 3.3/2.9 or its equivalent)
  [for option code /P☐ or /X2]
  Epoxy and polyurethane resin solvent coating
- ASTM CF-8M Stainless steel or its equivalent

Degrees of protection
IP66/IP67, TYPE 4X

Name plate and tag
316 SST

Mounting
Optional mounting brackets can be used either for two-inch pipe or flat panel mounting.

Terminal screws
M4 screws

Integral Indicator (with indicator model)
5-digit numerical display, 6-digit unit display and bar graph.

Local Parameter Setting (with indicator model)
Parameter configuration by the push button offers easy and quick setup for parameters.
Accessible parameters are different with each output signal cord.

Weight
Aluminum housing:
1.3 kg (2.9 lb) without integral indicator and mounting
Integral indicator: 0.2 kg (0.4 lb)
Bracket for horizontal pipe: 0.2 kg (0.5 lb)
Bracket for vertical pipe: 0.9 kg (2.0 lb)
Stainless housing:
3.1 kg (6.8 lb) without integral indicator and mounting
Integral indicator: 0.3 kg (0.7 lb)

Connections
Refer to “MODEL AND SUFFIX CODE.”

All Rights Reserved. Copyright © 2016, Yokogawa Electric Corporation

Table 1. Sensor type, measurement range, and accuracy

Sensor Type		Standard	Measurement Range		Minimum Span	A/D Accuracy		D/A Accuracy
			°C	°F		°C	°F	
T/C	B	IEC60584	100 to 300 300 to 1820	212 to 572 572 to 3308	25°C (45°F)	±3.0 ±0.75	±5.4 ±1.35	±0.02% of span
	E		-200 to -50 -50 to 1000	-328 to -58 -58 to 1832		±0.35 ±0.16	±0.63 ±0.29	
	J		-200 to -50 -50 to 1200	-328 to -58 -58 to 2192		±0.25 ±0.20	±0.45 ±0.36	
	K		-200 to -50 -50 to 1372	-328 to -58 -58 to 2501		±0.5 ±0.25	±0.9 ±0.45	
	N		-200 to -50 -50 to 1300	-328 to -58 -58 to 2372		±0.4 ±0.35	±0.72 ±0.63	
	R		-50 to 0 0 to 600 600 to 1768	-58 to 32 32 to 1112 1112 to 3214		±1.0 ±0.6 ±0.4	±1.8 ±1.08 ±0.72	
	S		-50 to 0 0 to 600 600 to 1768	-58 to 32 32 to 1112 1112 to 3214		±1.0 ±0.5 ±0.4	±1.8 ±0.9 ±0.72	
	T		-200 to -50 -50 to 400	-328 to -58 -58 to 752		±0.25 ±0.14	±0.45 ±0.25	
	C		0 to 400 400 to 1400 1400 to 2000 2000 to 2300	32 to 752 752 to 2552 2552 to 3632 3632 to 4172		±0.7 ±0.5 ±0.7 ±0.9	±1.26 ±0.9 ±1.26 ±1.62	
	W3	ASTM E988	0 to 400 400 to 1400 1400 to 2000 2000 to 2300	32 to 752 752 to 2552 2552 to 3632 3632 to 4172		±0.8 ±0.5 ±0.6 ±0.9	±1.44 ±0.9 ±1.08 ±1.62	
	L	DIN43710	-200 to -50 -50 to 900	-328 to -58 -58 to 1652		±0.3 ±0.2	±0.54 ±0.36	
	U		-200 to -50 -50 to 600	-328 to -58 -58 to 1112		±0.35 ±0.25	±0.63 ±0.45	
RTD	Pt100	IEC60751	-200 to 850	-328 to 1562	10°C (18°F)	±0.1	±0.18	
	Pt200		-200 to 850	-328 to 1562		±0.22	±0.40	
	Pt500		-200 to 850	-328 to 1562		±0.14	±0.25	
	Pt1000		-200 to 300	-328 to 572		±0.1	±0.18	
	JPt100	—	-200 to 500	-328 to 932		±0.1	±0.18	
	Cu10	SAMA RC21-4	-70 to 150	-94 to 302		±1.0	±1.8	
	Ni120	—	-70 to 320	-94 to 608		±0.08	±0.15	
mV		—	-10 to 120 [mV]		3 mV	±0.012 [mV]		
ohm		—	0 to 2000 [Ω]		20 Ω	±0.35 [Ω]		

Note 1: Total Accuracy = (A/D Accuracy / Span + D/A Accuracy).
For Fieldbus type, accuracy = A/D Accuracy.
For T/C input, add Cold Junction Compensation Error to the total accuracy.
Example: when selecting Pt100 with measurement range of 0 to 200 °C
0.1°C / 200°C×100% of span +0.02% of span = 0.07% of span

Note 2: T/C C type is same as W5 (ASTM E988).

All Rights Reserved. Copyright © 2016, Yokogawa Electric Corporation

Table 2. Temperature coefficient

Sensor Type		Temperature Coefficient
Thermocouples E, J, K, N, T, L, U		0.08°C + 0.02% of abs.reading
Thermocouples R, S, W3, C		0.25°C + 0.02% of abs.reading
Thermocouple B	100°C ≤ Reading < 300°C	1°C + 0.02% of abs.reading
	300°C ≤ Reading	0.5°C + 0.02% of abs.reading
RTD		0.08°C + 0.02% of abs.reading
mV		0.002 mV + 0.02% of abs.reading
ohm		0.1 Ω + 0.02% of reading

Note1: The “abs.reading” for thermocouples and RTD means the absolute value of the reading in °C.
Example of “abs.reading”
When the temperature value is 250 Kelvin, “abs.reading” is 23.15.
|250−273.15|= 23.15
Note2: Ambient Temperature Effect per 10 °C change is ±0.1% or ±(temperature coefficient/span), whichever is greater.
Example of Ambient Temperature Effect
Conditions:
1) Input Sensor: Pt100
2) Calibration Range: −100 to 100°C
3) Reading value: −50°C
Ambient Temperature Effect per 10°C
Temperature Coefficient/Span=(0.08°C+0.02/100×|−50°C|)/{100°C−(−100°C)}= 0.00045 → 0.045%
Therefore, Ambient Temperature Effect is ±0.1%/10°C
Note3: See also Table 3 for R1 option.

■ MODEL AND SUFFIX CODES

Model	Suffix Codes	Description
YTA710	. . . . .	Temperature Transmitter
Output signal	**-D**.	4 to 20 mA DC with digital communication BRAIN protocol
	-J	4 to 20 mA DC with digital communication HART protocol
	-F	Digital communication (FOUNDATION Fieldbus protocol)
—	**A**	Always A (Global)
Sensor input	**1**	Single
	2	Double
Housing code	**A**	Aluminum
	C	Stainless
Electrical connection	**0**	G1/2 female
	2	1/2 NPT female
	4	M20 female
Integral indicator	**D**	Digital indicator with Local Operating Switch
	N	None
Mounting bracket	**B**	304 SST or ASTM304L 2-inch horizontal pipe mounting bracket *1
	D	304 SST or ASTM304L 2-inch vertical pipe mounting bracket
	J	316 SST or ASTM316L 2-inch horizontal pipe mounting bracket *1
	K	316 SST or ASTM316L 2-inch vertical pipe mounting bracket
	N	None
Option codes	/☐ Optional specification	

*1: For flat-panel mounting, please prepare bolts and nuts.

All Rights Reserved. Copyright © 2016, Yokogawa Electric Corporation

■ OPTIONAL SPECIFICATION

Item	Description		Code
Lightning protector *4	Allowable current: Max. 6000A(8×20μs), repeating 1000A(8×20μs), 100 times		**A**
Painting*1*6	Color and coating change Amplifier cover only*3	Color: Munsell code N1.5 Black Coating: High anti-corrosion coating	**P1**
		Color: Munsell code 7.5BG4/1.5, Jade green Coating: High anti-corrosion coating	**P2**
		Color: Metallic silver Coating: High anti-corrosion coating	**P7**
	Color and coating change Amplifier and terminal Covers*3	Color: Munsell code 7.5 R4/14, Red Coating: High anti-corrosion coating	**PR**
	Coating change	High anti-corrosion coating	**X2**
Output signal low-side in transmitter failure*2	Output signal Low-side: –5%, 3.2 mA DC or less. Sensor burnout is also set to 'Low': –2.5%, 3.6 mA DC.		**C1**
NAMUR NE43 compliant*2	Output signal limits: 3.8 mA to 20.5 mA	Failure alarm down-scale: output status at CPU failure and hardware error is –5%, 3.2 mA or less. Sensor burnout is also set to Low: –2.5%, 3.6 mA DC.	**C2**
		Failure alarm up-scale: output status at CPU failure and hardware error is 110%, 21.6 mA or more. In this case Sensor burnout is High: 110%, 21.6 mA DC.	**C3**
Data configuration*9	Description into “Descriptor” parameter of HART protocol (max. 16 characters)		**CA**
Wired tag plate	SUS316 stainless steel tag plate wired onto transmitter		**N4**
Sensor matching	RTD sensor matching function		**CM1**
Attached flameproof packing adapter*5*7	Electrical connection G1/2 female Applicable cable: O.D.8.0 to 12 mm	2pc.	**V52**
EAC approval and Russian pattern approval marking*8*10	EAC approval and Russian pattern approval marking		**VR**
EAC approval marking without Russian pattern approval marking*8*10	EAC approval marking without Russian pattern approval marking		**VE**
UKCA Marking*14	UK Conformity Assessed (UKCA) Marking		**UK**
High ambient-temp characteristic type	Refer to Table 3 Temperature coefficient		**R1**
Japanese Manufacturing *11*12*13	Optional code to specify the manufacturing factory		**JP**
Marine Certificate*9	DNV Type Approval Certificate No.: TAA00002N5		**WCD**
	EU RO Mutual Recognition Type Approval Certificate No.: MRA000002G		**WCE**

Note: The indication of the nameplate shows an initial shipment state.
*1: Not applicable for Stainless housing.
*2: Not applicable for Fieldbus type.
*3: Except for Amplifier and terminal cover, color and coating are general specification.
*4: Lightning protector (surge absorber) can be remove from, or added to the equipment.
*5: Combination with other Explosion protected other than TIIS flameproof is not possible.
*6: The combination of X2 and P☐ is not possible.
*7: Applicable for Electrical Connection code 4. (The thread of connection between YTA and CABLE GLAND is M20, and the thread of connection between CABLE GLAND and CABLE is G1/2.)
*8: Not applicable for BRAIN type.
*9: Applicable for only HART type.
*10: Combination with Explosion Protected types other than EAC are not applicable.
*11: If JP is not attached, it is made in China. It includes English name plate and English or Japanese IM.
*12: In principle when this code is specified, the product made in Japan will be delivered.
*13: Not applicable for /VE, /VR, /R1.
*14: Combination with Explosion Protected types other than ATEX are not applicable.

All Rights Reserved. Copyright © 2016, Yokogawa Electric Corporation

Table 3. Temperature coefficient (R1 option)

Sensor Type		Input Range °C	A/D Coefficient	D/A Coefficient
T/C	B	100 to 300 300 to 1000 1000 to 1820	±(0.586°C - 0.1433% of reading) ±(0.187°C - 0.0103% of reading) ±(0.038°C + 0.0046% of reading)	±{0.0088% of span + 0.007% of(reading − LRV)}
	E	-200 to 0 0 to 1000	±(0.007°C + 0.0158% of abs.reading) ±(0.007°C + 0.0065% of reading)	
	J	-200 to 0 0 to 1200	±(0.009°C + 0.0172% of abs.reading) ±(0.009°C + 0.0065% of reading)	
	K	-200 to 0 0 to 1372	±(0.011°C + 0.0218% of abs.reading) ±(0.011°C + 0.0078% of reading)	
	N	-200 to 0 0 to 1300	±(0.017°C + 0.0265% of abs.reading) ±(0.017°C + 0.0063% of reading)	
	R	-50 to 0 0 to 200 200 to 1768	±(0.088°C + 0.1273% of abs.reading) ±(0.088°C - 0.0142% of reading) ±(0.048°C + 0.0058% of reading)	
	S	-50 to 0 0 to 200 200 to 1768	±(0.088°C + 0.0517% of abs.reading) ±(0.088°C - 0.0106% of reading) ±(0.054°C + 0.0063% of reading)	
	T	-200 to 0 0 to 400	±(0.011°C + 0.0195% of abs.reading) ±(0.011°C + 0.0044% of reading)	
	C	0 to 1400 1400 to 2300	±(0.034°C + 0.0069% of reading) ±(-0.157°C + 0.0205% of reading)	
	W3	0 to 1400 1400 to 2300	±(0.044°C + 0.0053% of reading) ±(-0.214°C + 0.0237% of reading)	
	L	-200 to 0 0 to 900	±(0.009°C + 0.0117% of abs.reading) ±(0.009°C + 0.0052% of reading)	
	U	-200 to 0 0 to 600	±(0.011°C + 0.0148% of abs.reading) ±(0.011°C + 0.0046% of reading)	
RTD	Pt100	-200 to 850	±(0.015°C + 0.005% of reading)	
	Pt200	-200 to 850	±(0.023°C + 0.012% of reading)	
	Pt500	-200 to 850	±(0.015°C + 0.005% of reading)	
	Pt1000	-200 to 300	±(0.015°C + 0.005% of reading)	
	JPt100	-200 to 500	±(0.015°C + 0.005% of reading)	
	Cu10	-70 to 150	±(0.320°C + 0.120% of reading)	
	Ni120	-70 to 320	±(0.010°C + 0.005% of reading)	
mV		-10 to 120 [mV]	±(0.441uV + 0.0065% of abs.reading)	
ohm		0 to 2000 [Ω]	±(0.040Ω + 0.0088% of reading)	

Note: HART and BRAIN Temperature Effect = A/D coefficient + D/A coefficient
Fieldbus Temperature Effect = A/D coefficient (The data in the table is the coeffcient per 10°C change.)

Example 1; Pt100Ω, 0 to 200°C calibration range, 50°C reading
(0.015°C + 50°C × 0.005%) + [200°C × 0.0088% + (50 - 0) × 0.007%]
= (0.015°C + 0.0025°C) + (0.0176°C + 0.0035°C)
= ± 0.0386°C [per 10°C change]

Example 2; T T/C, -100 to 100°C calibration range, -50°C reading
(0.011°C + | -50°C | × 0.0195%) + {200°C × 0.0088% + [-50 - (-100)] × 0.007%}
= (0.011°C + 0.00975°C) + (0.0176°C + 0.0035°C)
= ± 0.04185°C [per 10°C change].

All Rights Reserved. Copyright © 2016, Yokogawa Electric Corporation

■ OPTIONAL SPECIFICATION (For Explosion Protected type)

Please select appropriate equipment in accordance with the laws and regulations of the relevant country/region, when it is used in a location where explosive atmospheres may be present.

Item	Description	Code
ATEX	[4-20mA & Fieldbus: Flameproof and dust ignition proof approval] Applicable Standard: EN IEC 60079-0, EN 60079-1, EN 60079-31 Certificate: KEMA 07ATEX0130X II 2 G Ex db IIC T6/T5 Gb, II 2 D Ex tb IIIC T70°C/T90°C Db Ambient Temperature for Gas Atmospheres: –40 to 75°C for T6, –40 to 80°C for T5 Ambient Temperature for Dust Atmospheres: –30 to 65°C for T70°C, –30 to 80°C for T90°C Enclosure: IP66 in accordance with EN IEC60079-0, IP67 in accordance with only EN 60529 Electrical Connection: 1/2 NPT female and M20 female*1	**KF2**
	4-20mA: [Intrinsically safe ia approval] Applicable Standard: EN IEC 60079-0, EN 60079-11 Certificate No. FM16ATEX0019X II 1 G Ex ia IIC T5…T4 Ga II 2 (1) D Ex ia [ia Da] IIIC T135°C Db Ambient Temperature: –40 to +70°C for T4, –40 to +50°C for T5, –30 to +70°C for IIIC Enclosure: IP66 in accordance with EN IEC60079-0, IP67 in accordance with only EN 60529 Electrical parameters: Supply/Output circuit: Terminals: +, – Ui=30V, Ii=200mA, Pi=1.0W, Ci=22nF, Li=0mH Sensor circuit: Terminals: 1, 2, 3, 4, 5 Uo=6V, Io=90mA, Po=135mW, Co=10μF, Lo=3.9mH Dielectric strength: 500 V a.c.r.m.s.,1 min (Without /A) [Intrinsically safe ic] Applicable Standard: EN IEC 60079-0, EN 60079-11 Certificate: Not Applicable as per Annex VIII to ATEX 2014/34/EU II 3 G Ex ic IIC T5...T4 Gc Ambient Temperature: –30 to +70°C for T4, –30 to +50°C for T5 Enclosure: IP66 in accordance with EN IEC60079-0, IP67 in accordance with only EN 60529 Overvoltage category: I Electrical parameters: Supply/Output circuit: Terminals: +, – Ui=30V, Ci=2.2nF, Li=0mH Sensor circuit: Terminals: 1, 2, 3, 4, 5 Uo=6V, Io=90mA, Po=135mW, Co=10μF, Lo=3.9mH Dielectric strength: 500 V a.c.r.m.s.,1 min (Without /A) [Flameproof and Dust Ignition Proof Approval] Same as KF2	**KU2**
	Fieldbus: [Intrinsically safe ia approval] Applicable Standard: EN IEC 60079-0, EN 60079-11 Certificate No. FM16ATEX0019X II 2 (1) D Ex ia [ia Da] IIIC T135°C Db II 1 G Ex ia IIC T4 Ga Ambient Temperature: –55 to +60°C for T4, -30 to +60 for IIIC Enclosure: IP66 in accordance with EN IEC60079-0, IP67 in accordance with only EN 60529 Electrical parameters: Supply/Output circuit: Terminals: +, – FISCO field device or Ui=30V, Ii=300mA, Pi=1.2W, Ci=2.2nF, Li=0mH Sensor circuit: Terminals: 1, 2, 3, 4, 5 Uo=6V, Io=90mA, Po=135mW, Co=10μF, Lo=3.9mH Dielectric strength: 500 V a.c.r.m.s.,1 min (Without /A) [Intrinsically safe ic] Applicable Standard: EN IEC 60079-0, EN 60079-11 Certificate: Not Applicable as per Annex VIII to ATEX 2014/34/EU II 3 G Ex ic IIC T4 Gc Ambient Temperature: –30 to +70°C Enclosure: IP66 in accordance with EN IEC60079-0, IP67 in accordance with only EN 60529 Overvoltage category: I Electrical parameters: Supply/Output circuit: Terminals: +, – FISCO field device or Ui=32V, Ci=2.2nF, Li=0mH Sensor circuit: Terminals: 1, 2, 3, 4, 5 Uo=6V, Io=90mA, Po=135mW, Co=10μF, Lo=3.9mH Dielectric strength: 500 V a.c.r.m.s.,1 min (Without /A) [Flameproof and Dust Ignition Proof Approval] Same as KF2	**KU25**

All Rights Reserved. Copyright © 2016, Yokogawa Electric Corporation

Item	Description	Code
IECEx	[4-20mA & Fieldbus: Flameproof and dust ignition proof approval] Applicable standard: IEC 60079-0, IEC 60079-1, IEC 60079-31 Certificate: IECEx KEM 07.0044X Ex db IIC T6/T5 Gb, Ex tb IIIC T70°C/T90°C Db Ambient Temperature for Gas Atmospheres: –40 to 75°C (–40 to 167°F) for T6, –40 to 80°C (–40 to 176°F) for T5 Ambient Temperature for Dust Atmospheres: –30 to 65°C (–22 to 149°F) for T70°C, –30 to 80°C (–22 to 176°F) for T90°C Enclosure: IP66 in accordance with IEC60079-0, IP67 in accordance with only IEC 60529 Electrical Connection: 1/2 NPT female and M20 female*1	**SF2**
	4-20mA: [Intrinsically safe ia, ic pproval] Applicable Standard: IEC 60079-0, IEC 60079-11 Certificate No. IECEx FMG 16.0014X Ex ia IIC T5…T4 Ga Ex ic IIC T5...T4 Gc Ex ia [ia Da] IIIC T135°C Db Ambient Temperature: –40 to +70°C for T4 (Ex ia), –40 to +50°C for T5 (Ex ia), –30 to +70°C for IIIC (Ex ia), –30 to +70°C for T4 (Ex ic), –30 to +50°C for T5 (Ex ic) Enclosure: IP66 in accordance with IEC60079-0, IP67 in accordance with only IEC60529 Over voltage category: I Electrical parameters (Ex ia) Supply/Output circuit: Terminal: +, – Ui=30V, Ii=200mA, Pi=1.0W, Ci=22nF, Li=0mH Sensor circuit: Terminals: 1, 2, 3, 4, 5 Uo=6V, Io=90mA, Po=135mW, Co=10μF, Lo=3.9mH Electrical parameters (Ex ic) Supply/Output circuit: Terminal: +, – Ui=30V, Ci=22nF, Li=0mH Sensor circuit: Terminals: 1, 2, 3, 4, 5 Uo=6V, Io=90mA, Po=135mW, Co=10μF, Lo=3.9mH Dielectric strength: 500 V a.c.r.m.s.,1 min (Without /A) [Flameproof and Dust Ignition Proof Approval] Same as SF2	**SU2**
	Fieldbus: [Intrinsically safe ia approval] Applicable Standard: IEC 60079-0, IEC 60079-11 Certificate No. IECEx FMG 16.0014X Ex ia IIC T4 Ga Ex ic IIC T4 Gc Ex ia [ia Da] IIIC T135°C Db Ambient Temperature: –55 to +60°C for T4 (Ex ia) Ambient Temperature: –30 to +60°C for IIIC (Ex ia) –30 to +70°C (Ex ic) Enclosure: IP66 in accordance with IEC60079-0, IP67 in accordance with only IEC60529 Overvoltage category: I Electrical parameters (Ex ia) Supply/Output circuit: Terminals: +, – FISCO field device or Ui=30V, Ii=300mA, Pi=1.2W, Ci=2.2nF, Li=0mH Sensor circuit: Terminals: 1, 2, 3, 4, 5 Uo=6V, Io=90mA, Po=135mW, Co=10μF, Lo=3.9mH Electrical parameters (Ex ic) Supply/Output circuit: Terminals: +, – FISCO field device or Ui=32V, Ci=2.2nF, Li=0mH Sensor circuit:Terminals: 1, 2, 3, 4, 5 Uo=6V, Io=90mA, Po=135mW, Co=10μF, Lo=3.9mH Dielectric strength: 500 V a.c.r.m.s.,1 min (Without /A) [Flameproof and Dust Ignition Proof Approval] Same as SF2	**SU25**

All Rights Reserved. Copyright © 2016, Yokogawa Electric Corporation

Item	Description	Code
FM (US)	[4-20mA & Fieldbus: Explosionproof approval] Applicable standard: FM Class 3600, FM Class 3615, FM Class 3810, NEMA250 Certificate No.FM18US0002 Class I, Division 1, Groups A, B, C and D.; Class II/III, Division 1, Groups E, F and G. "FACTORY SEALD, CONDUIT SEAL NOT REQUIRED." Enclosure Ratings: TYPE 4X Temperature Class: T6 Ambient Temperature: –40 to 60°C (–40 to 140°F) Electrical Connection: 1/2NPT female*2	**FF1**
	4-20mA: [Intrinsically safe approval/non-incendive approval] Applicable standard: FM Class 3600, FM Class 3610, FM Class 3611, FM Class 3810, ANSI/UL-60079-0, ANSI/ISA-60079-11 ANSI/IEC 60529, ANSI/UL 61010-1, ANSI/UL 61010-2-30, NEMA 250, ANSI/UL 121201 Certificate No.FM16US0033X Intrinsically safe for Class I, II, III Division 1, Groups A, B, C, D, E, F, G, T5…T4 Class I Zone 0 AEx ia IIC T5…T4 Non-incendive for Class I, II, Division 2, Groups A, B, C, D, F, G, T5…T4 Class III, Division 1 T5…T4 Class I Zone 2 Group IIC T5…T4 Ambient Temperature: –40 to 70°C for T4, –40 to 50°C for T5 Enclosure Type 4X, IP66/IP67 Electrical parameters: Intrinsically safe for Supply/Output circuit: Terminals: +, – Ui=30V, Ii=200mA, Pi=1.0W, Ci=22nF, Li=0mH Sensor circuit: Terminals: 1, 2, 3, 4, 5 Uo=6V, Io=90mA, Po=135mW, Co=10μF, Lo=3.9mH Non-incendive for Supply/Output circuit: Terminals: +, – Ui=30V, Ci=22nF, Li=0mH Sensor circuit:Terminals: 1, 2, 3, 4, 5 Uo=6V, Io=90mA, Po=135mW, Co=10μF, Lo=3.9mH Dielectric strength: 500 V a.c.r.m.s.,1 min (Without /A) [Explosionproof approval] Same as FF1	**FU1**
	Fieldbus: [Intrinsically safe approval/non-incendive approval] Applicable standard: FM Class 3600, FM Class 3610, FM Class 3611, FM Class 3810, ANSI/UL-60079-0, ANSI/ISA-60079-11 ANSI/IEC 60529, ANSI/UL 61010-1, ANSI/UL 61010-2-30, NEMA 250, ANSI/UL 121201 Certificate No.FM16US0033X Intrinsically safe for Class I, II, III Division 1, Groups A, B, C, D, E, F, G T4 Class I Zone 0 AEx ia IIC T4 Non-incendive for Class I, II, Division 2, Groups A, B, C, D, F, G T4 Class III, Division 1 T4 Class I Zone 2 Group IIC T4 Ambient Temperature: –55 to 60°C Enclosure Type 4X, IP66/IP67 Electrical parameters: Intrinsically safe for Supply/Output circuit: Terminals: +, – FISCO field device or Ui=30V, Ii=300mA, Pi=1.2W, Ci=2.2nF, Li=0mH Sensor circuit: Terminals: 1, 2, 3, 4, 5 Uo=6V, Io=90mA, Po=135mW, Co=10μF, Lo=3.9mH Non-incendive for Supply/Output circuit: Terminals: +, – Ui=32V, Ci=2.2nF, Li=0mH Sensor circuit: Terminals: 1, 2, 3, 4, 5 Uo=6V, Io=90mA, Po=135mW, Co=10μF, Lo=3.9mH Dielectric strength: 500 V a.c.r.m.s.,1 min (Without /A) [Explosionproof approval] Same as FF1	**FU15**

All Rights Reserved. Copyright © 2016, Yokogawa Electric Corporation

Item	Description	Code
CSA*3*6 FM (Canada)*4*6	[4-20mA & Fieldbus: Explosionproof approval] Applicable standard: C22.2 No. 25, C22.2 No. 30, C22.2 No. 94.2, C22.2 No. 213, C22.2 No.61010-1, C22.2 No. 61010-2-030 Certificate No.1089576 Class I, Groups B, C and D, Class II, Groups E, F and G, Class III. For Class I, Division2 Groups ABCD Locations “FACTORY SEALED, CONDUIT SEAL NOT REQUIRED” Enclosure TYPE 4X Temperature Class: T6 Ambient Temperature: –40 to 60°C (Gas), –30 to 60°C (Dust) Electrical Connection: 1/2 NPT female*2	**CF1**
	4-20mA: [Intrinsically safe approval/non-incendive approval] Applicable standard: CAN/CSA-C22.2 No. 94.2, C22.2 No.213, CAN /CSA-C22.2 No. 60079-0, CAN/CSA-C22.2 No. 60079-11, CAN/CSA-C22.2 No. 60529, CAN/CSA-C22.2 No. 61010-1, CAN/CSA-C22.2 No. 61010-2-030 Certificate No.FM16CA0023X Intrinsically safe for Class I, II, III, Division 1, Groups A, B, C, D, E, F, G, T5…T4 Ex ia IIC T5…T4 Ga Non-incendive for Class I, II, Division 2, Groups A, B, C, D, F, G T5…T4 Class III Division 1 T5…T4 Ambient Temperature: –40 to 70°C for T4, –40 to 50°C for T5 Enclosure Type: 4X, IP66/IP67 Electrical parameters: Intrinsically safe for Supply/Output circuit: Terminals: +, – Ui=30V, Ii=200mA, Pi=1.0W, Ci=22nF, Li=0mH Sensor circuit: Terminals: 1, 2, 3, 4, 5 Uo=6V, Io=90mA, Po=135mW, Co=10μF, Lo=3.9mH Non-incendive for Supply/Output circuit: Terminals: +, – Ui=30V, Ci=22nF, Li=0mH Sensor circuit: Terminals: 1, 2, 3, 4, 5 Uo=6V, Io=90mA, Po=135mW, Co=10μF, Lo=3.9mH Dielectric strength: 500 V a.c.r.m.s.,1 min (Without /A) [Explosionproof approval] Same as CF1	**CU1**
	Fieldbus: [Intrinsically safe approval/non-incendive approval] Applicable standard: CAN/CSA-C22.2 No. 94.2, C22.2 No.213, CAN /CSA-C22.2 No. 60079-0, CAN/CSA-C22.2 No. 60079-11, CAN/CSA-C22.2 No. 60529, CAN/CSA-C22.2 No. 61010-1, CAN/CSA-C22.2 No. 61010-2-030 Certificate No.FM16CA0023X Intrinsically safe for Class I, II, III, Division 1, Groups A, B, C, D, E, F, G T4 Ex ia IIC T4 Ga Non-incendive for Class I, II, Division 2, Groups A, B, C, D, F, G T4 Class III Division 1 T4 Ambient Temperature: –55 to 60°C Enclosure Type: 4X, IP66/IP67 Electrical parameters: Intrinsically safe for Supply/Output circuit: Terminals: +, – FISCO field device or Ui=30V, Ii=300mA, Pi=1.2W, Ci=2.2nF, Li=0mH Sensor circuit: Terminals: 1, 2, 3, 4, 5 Uo=6V, Io=90mA, Po=135mW, Co=10μF, Lo=3.9mH Non-incendive for Supply/Output circuit: Terminals: +, – Ui=32V, Ci=2.2nF, Li=0mH Sensor circuit: Terminals: 1, 2, 3, 4, 5 Uo=6V, Io=90mA, Po=135mW, Co=10μF, Lo=3.9mH Dielectric strength: 500 V a.c.r.m.s.,1 min (Without /A) [Explosionproof approval] Same as CF1	**CU15**

All Rights Reserved. Copyright © 2016, Yokogawa Electric Corporation

Item	Description	Code
NEPSI*7	4-20mA and Fieldbus: [Flameproof and Dust Ignition Proof Approval] Applicable Standard: GB/T 3836.1,GB/T 3836.2,GB/T 3836.31 Certificate No. GYJ26.1105X Ex db IIC T5/T6 Gb Ex tb IIIC T70°C/T90°C Db Ambient Temperature for Gas Atmospheres: –40 to 75°C for T6, –40 to 80°C for T5 Ambient Temperature for Dust Atmospheres: –30 to 65°C for T70°C, –30 to 80°C for T90°C Enclosure: IP66 in accordance with GB/T 3836.1 Electrical Connection: 1/2 NPT female and M20 female*1	**NF2**
	4-20mA: [Intrinsically safe approval] Applicable Standard: GB/T 3836.1,GB/T 3836.4 Certificate No.: GYJ25.1396X Ex ia IIC T4···T5 Ga Ex ic IIC T4···T5 Gc Ex ia [ia Da] IIIC T135°C Db Ambient Temperature: –40 to 70°C for T4, –40 to 50°C for T5(Ex ia) –30 to 70°C(Ex ia [ia Da]) –30 to 70°C for T4, –30 to 50°C for T5(Ex ic) Enclosure: IP66 in accordance with GB/T 3836.1 Overvoltage category: I Electrical parameters (Ex ia): Supply/Output circuit: Terminals: +, - Ui = 30 V, Ii = 200 mA, Pi = 1.0 W, Ci = 22 nF, Li = 0 mH Sensor circuit: Terminals: 1, 2, 3, 4, 5 Uo = 6 V, Io = 90 mA, Po = 135 mW, Co = 10 μF, Lo = 3.9 mH Electrial parameters (Ex ic): Supply/Output circuit: Terminals: +, - Ui = 30 V, Ci = 22 nF, Li = 0 mH Sensor circuit: Terminals: 1, 2, 3, 4, 5 Uo = 6 V, Io = 90 mA, Po = 135 mW, Co = 10 μF, Lo = 3.9 mH Dielectric strength: 500 V a.c.r.m.s., 1 min (Without /A)	**NS2**
	Fieldbus: [Intrinsically safe approval] Applicable Standard: GB/T 3836.1,GB/T 3836.4 Certificate No.: GYJ25.1396X Ex ia IIC T4 Ga Ex ic IIC T4 Gc Ex ia [ia Da] IIIC T135°C Db Ambient Temperature: –55 to 60°C for T4(Ex ia) –30 to 60°C(Ex ia [ia Da]) –30 to 70°C for T4(Ex ic) Enclosure: IP66 in accordance with GB/T 3836.1 Overvoltage category: I Electrical parameters (Ex ia): Supply/output circuit: Terminals: +, - FISCO field device or Ui = 30 V, Ii = 300 mA, Pi = 1.2 W, Ci = 2.2 nF, Li = 0 mH Sensor input circuit: Terminals: 1, 2, 3, 4, 5 Uo = 6 V, Io = 90 mA, Po = 135 mW, Co = 10 μF, Lo = 3.9 mH Electrial parameters (Ex ic): Supply/Output circuit: Terminals: +, - FISCO field device or Ui = 32 V, Ci = 2.2 nF, Li = 0 mH, Sensor circuit: Terminals: 1, 2, 3, 4, 5 Uo = 6 V, Io = 90 mA, Po = 135 mW, Co = 10 μF, Lo = 3.9 mH Dielectric strength: 500 V a.c.r.m.s., 1 min (Without /A)	**NS25**
INMETRO*6	[4-20mA & Fieldbus: Flameproof and dust ignition proof approval] Applicable Standard: ABNT NBR IEC 60079-0, ABNT NBR IEC60079-1, ABNT NBR IEC 60079-31 Certificate: DEKRA 16.0009X(YCS), DEKRA 24.0001X (YMG Kofu), DEKRA 24.0002X (YSA) (Note) Ex db IIC T6/T5 Gb, Ex tb IIIC T70°C/ 90°C Db Ambient Temperature for Gas: –40 to +75°C for T6, –40 to +80°C for T5 Ambient Temperature for Dust: –30 to +65°C for T70°C, –30 to +80°C for T90°C Enclosure: IP66 in accordance with IEC60079-0 Electrical Connection: 1/2 NPT female and M20 female*1	**UF1**

(Note) YCS: Yokogawa Electric China Co., Ltd
YMG Kofu: Yokogawa Manufacturing Corporation - Kofu Factory
YSA: Yokogawa America do sul Ltda

All Rights Reserved. Copyright © 2016, Yokogawa Electric Corporation

Item	Description	Code
INMETRO*6	4-20mA: [Intrinsically safe approval "ia"] Applicable Standard: ABNT NBR IEC 60079-0, ABNT NBR IEC 60079-11 Certificate: DEKRA 26.0001X (YCS), DEKRA 26.0002X (YMG Kofu), DEKRA 26.0003X (YSA) (Note) Ex ia IIC T5...T4 Ga Ex ia [ia Da] IIIC T135°C Db Ambient Temperature: –55 to +70°C for T4, –55 to +50°C for T5 –30 to +70°C for IIIC Enclosure: IP66 in accordance with ABNT NBR IEC 60079-0. IP67 in accordance with only ABNT NBR IEC 60529. Electrical parameters: Supply/Output circuit: Terminals: +, − Ui=30V, Ii=200mA, Pi=1.0W, Ci=22nF, Li=0mH Sensor circuit: Terminals: 1, 2, 3, 4, 5 Uo=6V, Io=90mA, Po=135mW, Co=10μF, Lo=3.9mH Dielectric strength: 500 V a.c.r.m.s.,1 min (Without /A) [Intrinsically safe approval "ic"] Applicable Standard: ABNT NBR IEC 60079-0, ABNT NBR IEC 60079-11 Certificate: DEKRA 26.0001X (YCS), DEKRA 26.0002X (YMG Kofu), DEKRA 26.0003X (YSA) (Note) Ex ic IIC T5…T4 Gc Ambient Temperature: –30 to +70°C for T4, –30 to +50°C for T5 Enclosure: IP66 in accordance with ABNT NBR IEC 60079-0. IP67 in accordance with only ABNT NBR IEC 60529. Overvoltage category: I Electrical parameters: Supply/Output circuit: Terminals: +, − Ui=30V, Ci=22nF, Li=0mH Sensor circuit: Terminals: 1, 2, 3, 4, 5 Uo=6V, Io=90mA, Po=135mW, Co=10μF, Lo=3.9mH Dielectric strength: 500 V a.c.r.m.s.,1 min (Without /A)	**US1**
	Fieldbus: [Intrinsically safe approval "ia"] Applicable Standard: ABNT NBR IEC 60079-0, ABNT NBR IEC 60079-11 Certificate: DEKRA 26.0001X (YCS), DEKRA 26.0002X (YMG Kofu), DEKRA 26.0003X (YSA) (Note) Ex ia IIC T4 Ga Ex ia [ia Da] IIIC T135°C Db Ambient Temperature: –55 to +60°C for T4 –30 to +60°C for IIIC Enclosure: IP66 in accordance with ABNT NBR IEC 60079-0. IP67 in accordance with only ABNT NBR IEC 60529. Electrical parameters: Supply/Output circuit: Terminals: +, − FISCO field device or Ui=30V, Ii=300mA, Pi=1.2W, Ci=2.2nF, Li=0mH Sensor circuit: Terminals: 1, 2, 3, 4, 5 Uo=6V, Io=90mA, Po=135mW, Co=10μF, Lo=3.9mH Dielectric strength: 500 V a.c.r.m.s.,1 min (Without /A) [Intrinsically safe approval "ic"] Applicable Standard: ABNT NBR IEC 60079-0, ABNT NBR IEC 60079-11 Certificate: DEKRA 26.0001X (YCS), DEKRA 26.0002X (YMG Kofu), DEKRA 26.0003X (YSA) (Note) Ex ic IIC T4 Gc Ambient Temperature: –30 to +70°C Enclosure: IP66 in accordance with ABNT NBR IEC 60079-0. IP67 in accordance with only ABNT NBR IEC 60529. Overvoltage category: I Electrical parameters: Supply/Output circuit: Terminals: +, − FISCO field device or Ui=32V, Ci=2.2nF, Li=0mH Sensor circuit: Terminals: 1, 2, 3, 4, 5 Uo=6V, Io=90mA, Po=135mW, Co=10μF, Lo=3.9mH Dielectric strength: 500 V a.c.r.m.s.,1 min (Without /A)	**US15**

(Note) YCS: Yokogawa Electric China Co., Ltd
YMG Kofu: Yokogawa Manufacturing Corporation - Kofu Factory
YSA: Yokogawa America do sul Ltda

All Rights Reserved. Copyright © 2016, Yokogawa Electric Corporation

Item	Description	Code
KOSHA*7	[4-20mA & Fieldbus: Flameproof and dust ignition proof approval] (With /JP) Applicable Standard: Notice of Ministry of Labor No. 2021-22, harmorized with IEC 60079-0, IEC 60079-1, IEC 60079-31 Certificate: 21-AV4BO-0210X(Flameproof) 21-AV4BO-0209X(Dust Ignition proof) (Without /JP) Applicable Standard: Notice of Ministry of Labor No. 2021-22, harmorized with IEC60079-0, IEC 60079-1, IEC 60079-31 Certificate: 20-AV4BO-0088X (Flameproof), 20-AV4BO-0095X (Dust Ignition Proof) Ex d IIC T6/ T5, Ex tD A21 IP66 T70°C/ T90°C Ambient Temperature for Gas Atmospheres: –40 to 75°C for T6, –40 to 80°C for T5 Ambient Temperature for Dust Atmospheres: –30 to 65°C for T70°C, –30 to 80°C for T90°C Enclosure: IP66 in accordance with IEC 60079-0 Electrical Connection: 1/2 NPT female and M20 female*1	**PF2**
	4-20mA: [Intrinsically safe approval] (With /JP) Applicable Standard: Notice of Ministry of Labor No. 2021-22, harmorized with IEC 60079-0, IEC 60079-11 Certificate: 21-AV4BO-0208X (Without /JP) Applicable Standard: Notice of Ministry of Labor No. 2020-33, harmorized with IEC 60079-0, IEC 60079-11 Certificate: 20-AV4BO-0094X Ex ia IIC T5…T4 Ambient Temperature: –55 to +70°C for T4, –55 to +50°C for T5 Enclosure: IP66/IP67 Supply/Output circuit: Terminals: +, – Ui=30V, Ii=200mA, Pi=1.0W, Ci=22nF, Li=0mH Sensor circuit: Terminals: 1, 2, 3, 4, 5 Uo=6V, Io=90mA, Po=135mW, Co=10μF, Lo=3.9mH Dielectric strength: 500 V a.c.r.m.s.,1 min (Without /A)	**PS2**
	Fieldbus: [Intrinsically safe approval] (With /JP) Applicable Standard: Notice of Ministry of Labor No. 2021-22, harmorized with IEC 60079-0, IEC 60079-11 Certificate: 21-AV4BO-0208X (Without /JP) Applicable Standard: Notice of Ministry of Labor No. 2020-33, harmorized with IEC 60079-0, IEC 60079-11 Certificate: 20-AV4BO-0094X Ex ia IIC T4 Ambient Temperature: –55 to +60°C Enclosure: IP66/IP67 Supply/Output circuit: Terminals: +, – FISCO field device and Ui=30V, Ii=300mA, Pi=1.2W, Ci=2.2nF, Li=0mH Sensor circuit: Terminals: 1, 2, 3, 4, 5 Uo=6V, Io=90mA, Po=135mW, Co=10μF, Lo=3.9mH Dielectric strength: 500 V a.c.r.m.s.,1 min (Without /A)	**PS25**

All Rights Reserved. Copyright © 2016, Yokogawa Electric Corporation

Item	Description	Code
EAC*6*7*8	[4-20mA & Fieldbus: Flameproof and dust ignition proof approval] Applicable Standard: ГОСТ 31610.0, ГОСТ IEC 60079-1, ГОСТ IEC 60079-31 Certificate: ЕАЭС RU C-JP.AA87.B.00929/22 1Ex db IIC T6…T5 Gb X, Ex tb IIIC T70 °C…T90 °C Db X Ambient Temperature for Gas Atmospheres: –60 to 75°C for T6, –60 to 80°C for T5 Ambient Temperature for Dust Atmospheres: –30 to 65°C for T70°C, –30 to 80°C for T90°C Enclosure: IP66/IP67 Electrical Connection: 1/2 NPT female and M20 female*1	**GF1***5
	4-20mA: [Intrinsically safe approval "ia"] Applicable Standard: ГОСТ 31610.0, ГОСТ 31610.11 Certificate: ЕАЭС RU C-JP.AA87.B.00929/22 0Ex ia IIC T5…4 Ga X Ex ia [ia Da] IIIC T135 °C Db X Ambient Temperature: –55 to +70 °C for T4, –55 to +50 °C for T5, –30 to +70°C for IIIC Enclosure: IP66/IP67 Supply/Output circuit: Terminals: +, – Ui=30V, Ii=200mA, Pi=1.0W, Ci=22nF, Li=0mH Sensor circuit: Terminals: 1, 2, 3, 4, 5 Uo=6V, Io=90mA, Po=135mW, Co=10μF, Lo=3.9mH Dielectric strength: 500 V a.c.r.m.s.,1 min (Without /A) [Intrinsically safe approval "ic"] Applicable Standard: ГОСТ 31610.0, ГОСТ 31610.11 Certificate: ЕАЭС RU C-JP.AA87.B.00929/22 2Ex ic IIC T5...T4 Gc X Ambient Temperature: –30 to +70°C for T4, –30 to +50°C for T5 Enclosure: IP66/IP67 Overvoltage category: I Supply/Output circuit: Terminals: +, – Ui=30V, Ci=22nF, Li=0mH Sensor circuit: Terminals: 1, 2, 3, 4, 5 Uo=6V, Io=90mA, Po=135mW, Co=10μF, Lo=3.9mH Dielectric strength: 500 V a.c.r.m.s.,1 min (Without /A)	**GS1***5

All Rights Reserved. Copyright © 2016, Yokogawa Electric Corporation

Item	Description	Code
EAC*6*7*8	Fieldbus: [Intrinsically safe approval "ia"] Applicable Standard: ГОСТ 31610.0, ГОСТ 31610.11 Certificate: ЕАЭС RU C-JP.AA87.B.00929/22 0Ex ia IIC T4 Ga X Ex ia [ia Da] IIIC T135 °C Db X Ambient Temperature: –55 to +60°C for T4, –30 to +60°C for IIIC Enclosure: IP66/IP67 Supply/Output circuit: Terminals: +, – FISCO field device and Ui=30V, Ii=300mA, Pi=1.2W, Ci=2.2nF, Li=0mH Sensor circuit: Terminals: 1, 2, 3, 4, 5 Uo=6V, Io=90mA, Po=135mW, Co=10μF, Lo=3.9mH Dielectric strength: 500 V a.c.r.m.s.,1 min (Without /A) [Intrinsically safe approval "ic"] Applicable Standard: ГОСТ 31610.0, ГОСТ 31610.11 Certificate: ЕАЭС RU C-JP.AA87.B.00929/22 2Ex ic IIC T4 Gc X Ambient Temperature: –30 to +70°C Enclosure: IP66/IP67 Overvoltage category: I Supply/Output circuit: Terminals: +, – FISCO field device and Ui=32V, Ci=2.2nF, Li=0mH Sensor circuit: Terminals: 1, 2, 3, 4, 5 Uo=6V, Io=90mA, Po=135mW, Co=10μF, Lo=3.9mH Dielectric strength: 500 V a.c.r.m.s.,1 min (Without /A)	**GS15***5
	4-20mA: [Intrinsically safe approval] Same as GS1 Electrical Connection: 1/2 NPT female and M20 female*1 [Flameproof and dust ignition proof approval] Same as GF1	**GU1***5
	Fieldbus: [Intrinsically safe approval] Same as GS15 Electrical Connection: 1/2 NPT female and M20 female*1 [Flameproof and dust ignition proof Approval] Same as GF1	**GU15***5

*1: Applicable for Electrical Connection Code 2 and 4.
*2: Applicable for Electrical Connection Code 2.
*3: For Explosionproof approval.
*4: For Intrinsically safe approval/non-incendive approval.
*5: GF1, /GS1, /GS15, /GU1 and /GU15 shall be combined with either /VE or /VR.
*6: Not applicable for BRAIN type.
*7: Not applicable for Marine Certificate.
*8: Not applicable for /JP.

All Rights Reserved. Copyright © 2016, Yokogawa Electric Corporation

■ DIMENSIONS

Unit: mm (Approx. inch)

● **2-inch horizontal pipe mounting**

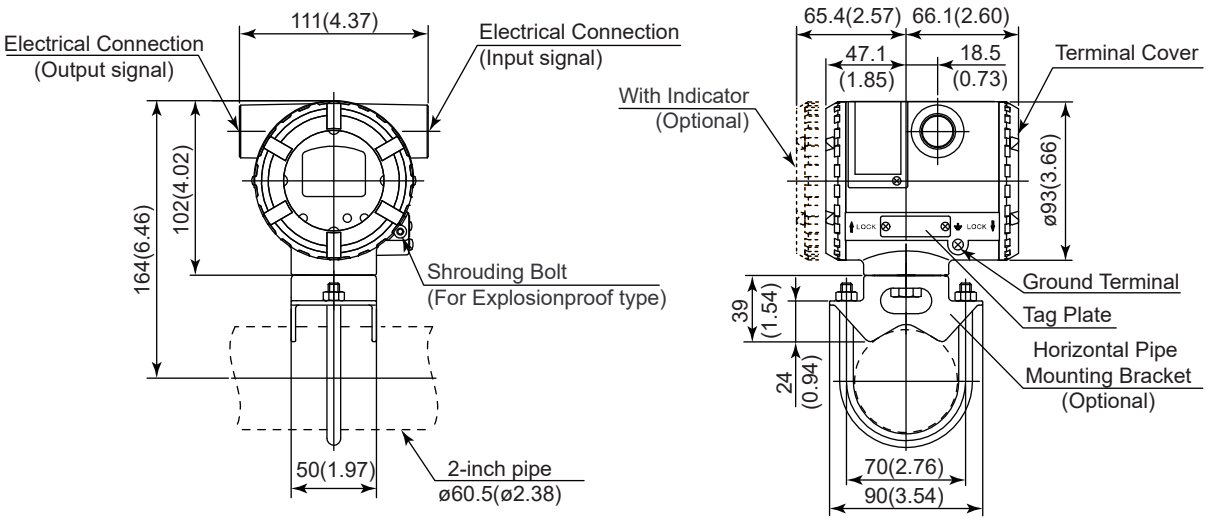

● **2-inch vertical pipe mounting**

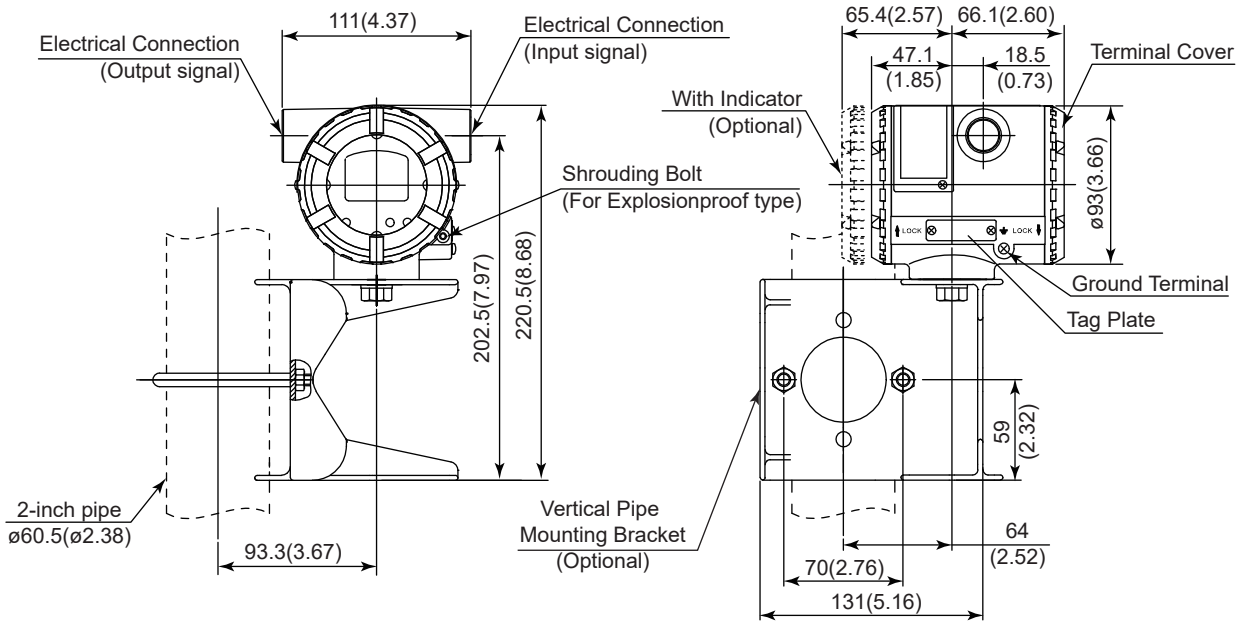

F02E.ai

All Rights Reserved. Copyright © 2016, Yokogawa Electric Corporation

● Terminals

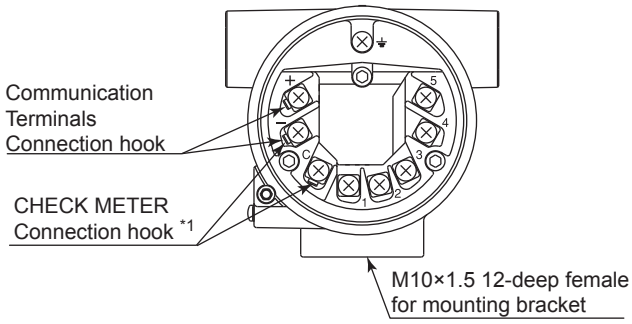

Terminal Configuration

±	Power supply and output terminal
− C	External indicator (ammeter) termial *1
⏚	Ground terminal

*1 : When using an external indicator or a check meter, the internal resistance must be 10Ω or less. The hook is not available for Fieldbus communication type.

F03E.ai

● Input Wiring

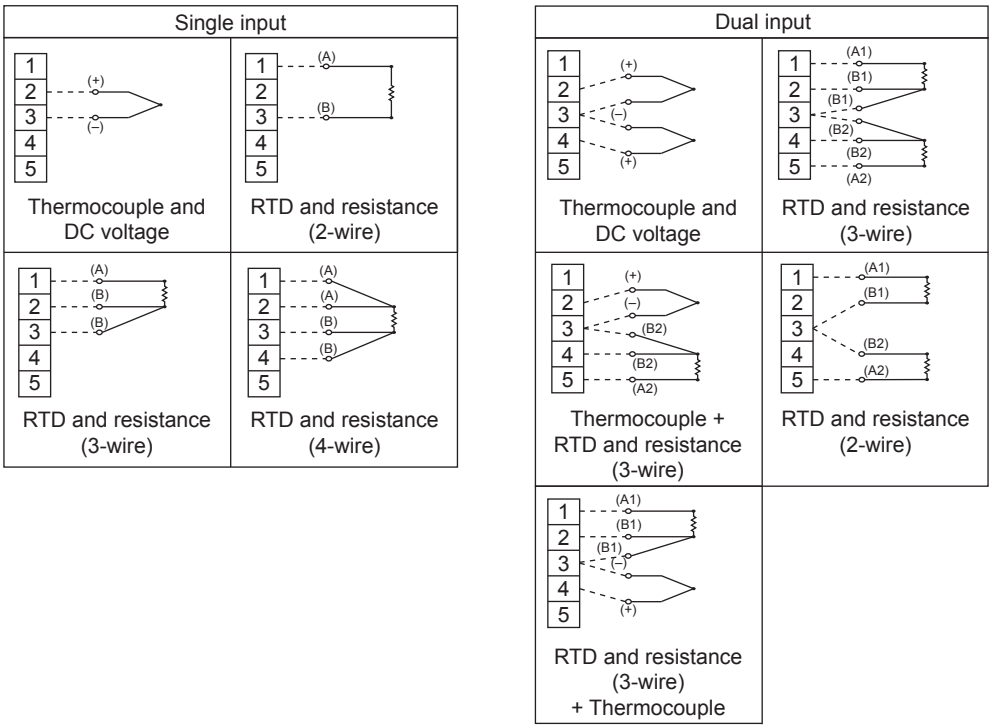

F04E.ai

● Wiring Port Shape

Unit: mm (Approx. inch)

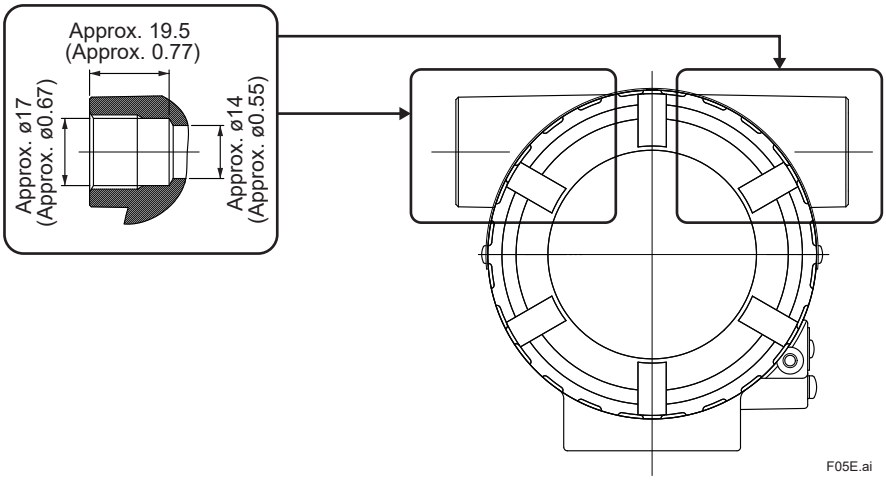

F05E.ai

All Rights Reserved. Copyright © 2016, Yokogawa Electric Corporation

< Ordering Information >

Specify the following when ordering Model, suffix codes, and optional codes.

Input order information according to Table 4-1 and 5-1. The instrument is shipped with the setting shown in Table 4 and 5 based on order information. Table 6 shows usable characters.

4-20mA type (HART and BRAIN type)

1. Sensor type.
   For RTD wires and resistance input, specify the number of wire as well. (Example: Pt100 3-wire system)
   For sensor input code-2, specify the type for two inputs. In this case, PV (Sensor1 value) and SV (Sensor2 value) are alternately displayed on the integral indicator with sensor back up DISABLE.
2. Calibration range and unit
   1) Calibration range can be specified within the measurement range shown in Table 1. Also, set the upper limit is larger than the lower limit.
   2) Specify one range from °C, K, °F or °R for temperature input. Specify the unit of mV for DC voltage input, or Ω for resistance.
3. Tag Number (if required)
   Specify Tag number (up to 16 Characters) to be engraved on the tag plate. The specified letters are converted to uppercase and written on Tag (16 Characters) in the amplifier memory.
4. Software tag (HART type)
   Specified characters (up to 32 characters) are set as “Tag” (the first 8 characters) and “Long tag (32 characters) in the amplifier memory. When the “SOFTWARE TAG” is not specified, “TAG NO” is set as “Tag” (the first 8 characters) and “Long tag” (32 characters) in the amplifier memory.
5. Other factory configurations (HART type)
   Specifying option code CA will allow further configuration at factory.
   Specified characters are converted to uppercase and written on descriptor in the amplifier memory.
6. Sensor back up
   Select ‘DISABLE’ or ‘ENABLE’.

Fieldbus type

1. Sensor type.
   For RTD wires and resistance input, specify the number of wire as well. For sensor input code-2, specify the type for two inputs. (Example: Pt100 3-wire system)
   In this case, AI1 (Sensor1) value and AI2 (Sensor2) value are alternately displayed on the integral indicator with sensor back up DISABLE.
2. Calibration range (XD_SCALE)
   For sensor input code-2, specify the range for two inputs.
3. Units of calibration range:
   Specify only one unit from the table, ‘Settings when shipped.’ For sensor input code-2, specify the unit for two inputs.
4. Output mode (L_TYPE)
   Select ‘Direct’ or ‘Indirect .’
5. Output scale (OUT_SCALE)
   For sensor input code-2, specify the scale for two inputs.
6. Output scale unit
   Specify only one unit from the table, ‘Settings when shipped.’ For sensor input code-2, specify the unit for two inputs.
7. Tag Number
   Specify Tag number (up to 16 Characters) to be engraved on the tag plate.
8. Software Tag (PD_TAG)
   Specify software tag (up to 32 Characters) to be written on the amplifier memory.
9. Node Address
   "Specify in hexadecimal"
10. Operation Functional Class
    Select ‘BASIC’ or ‘LINK MASTER’.
11. Sensor back up
    Select ‘DISABLE’ or ‘ENABLE’.

All Rights Reserved. Copyright © 2016, Yokogawa Electric Corporation

<Factory Setting>

Table 4-1. Sensor setting of 4-20 mA type (HART and BRAIN type)

Sensor1 setting

Order Specified				Setting		
Pattern	Sensor type	Range	Unit	Sensor type	Range	Unit
1	✓	✓	✓	Specified	Specified	Specified
2				PT100 3 wire	0-100	°C

Sensor2 setting

Order Specified				Setting		
Pattern	Sensor type	Range	Unit	Sensor type	Range	Unit
1	✓	✓	✓	Specified	Specified	Specified
2				Non Connection	—	—

O: Specified, Blank: Not specified, -: Initial setting

Table 4-2. Other setting of 4-20 mA type (HART and BRAIN type)

Sensor burnout *1	HIGH: 21.6 mA DC (110%)
Output in Transmitter failure	HIGH: 21.6 mA DC (110%) or more
Sensor backup	'DISABLE' or as specified
TAG No.	"Blank" or as specified in order

*1: Except when Optional code C1 or C2 is specified.

Table 6. Usable characters

SP	!		#					(	)		+		-	.	/
0	1	2	3	4	5	6	7	8	9	:			=		
	A	B	C	D	E	F	G	H	I	J	K	L	M	N	O
P	Q	R	S	T	U	V	W	X	Y	Z					_
	a	b	c	d	e	f	g	h	i	j	k	l	m	n	o
p	q	r	s	t	u	v	w	x	y	z					

Table 5-1. Sensor setting of Fieldbus type

Sensor1 setting

Order Specified							Setting					
Pattern	Sensor type	XD SCALE	XD SCALE UNIT	L TYPE	OUT SCALE	OUT SCALE UNIT	Sensor type	XD SCALE	XD SCALE UNIT	L TYPE	OUT SCALE	OUT SCALE UNIT
1	✓	✓	✓	✓	✓	✓	Specified	Specified	Specified	Specified	Specified	Specified
2	✓	✓	✓				Specified	Specified	Specified	DIRECT	0-100	%
3							PT100 3 wire	0-100	°C	DIRECT	0-100	%

Sensor2 setting

Order Specified							Setting					
Pattern	Sensor type	XD SCALE	XD SCALE UNIT	L TYPE	OUT SCALE	OUT SCALE UNIT	Sensor type	XD SCALE	XD SCALE UNIT	L TYPE	OUT SCALE	OUT SCALE UNIT
1	✓	✓	✓	✓	✓	✓	Specified	Specified	Specified	Specified	Specified	Specified
2	✓	✓	✓				Specified	Specified	Specified	DIRECT	0-100	%
3							Non Connection	—	—	—	—	—

O: Specified, Blank: Not specified, -: Initial setting

Table 5-2. Other setting of Fieldbus type

Node Address (in hexadecimal)	'0xF3' unless otherwise specified in order
Operation functional Class	'BASIC', or as specified in order
Sensor backup *1	'DISABLE' or as specified in order
TAG No. (Tag plate)	"Blank" or as specified in order
Software Tag (PD_TAG)	'TT1001' unless otherwise specified in order.

*1: Channel settings of AI function blocks depend on sensor backup setting.
- Unavailable
  AI1 = Sensor1
  AI2 = If Sensor2 type is specified, then Sensor2 else Terminal temperature
- Available
  AI1 = Backup temperature
  AI2 = Terminal temperature

All Rights Reserved. Copyright © 2016, Yokogawa Electric Corporation

< Information on EU WEEE Directive >

EU WEEE (Waste Electrical and Electronic Equipment) Directive is only valid in the EU.

This instrument is intended to be sold and used only as a part of equipment which is excluded from WEEE Directive, such as large-scale stationary industrial tools, a large-scale fixed installation and so on, and, therefore, subjected to the exclusion from the scope of the WEEE Directive. The instrument should be disposed of in accordance with local and national legislation/regulations.

All Rights Reserved. Copyright © 2016, Yokogawa Electric Corporation
Subject to change without notice.