KRACHT®
FLUID TECHNOLOGY AND SYSTEMS

# KF 2.5 ... 3150

## GEAR PUMPS

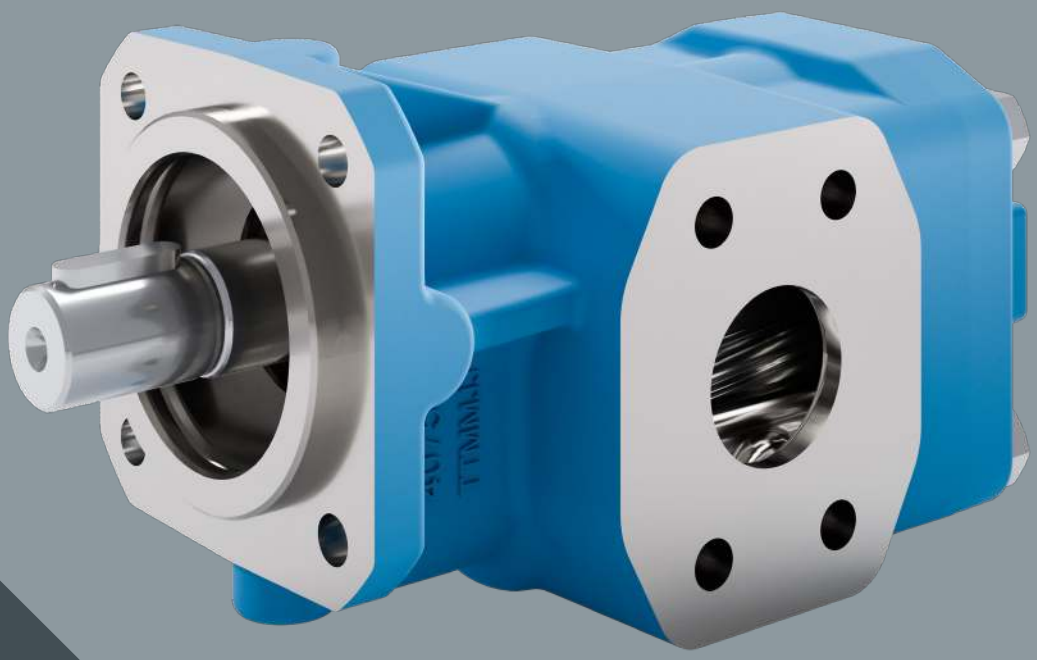

EN

KRACHT®

FLUID TECHNOLOGY AND SYSTEMS

# Content


| | |
|---|---|
| **General** | |
| Design, description, functional principle, operating instructions, direction of rotation | **4 - 6** |
| **Shaft seals** | **7** |
| **Valves** | |
| Valves that can be mounted on gear pumps | **8** |
| Valves that can be integrated into pipes | **9** |
| **Variants / Options** | |
| Noise optimisation versions, multiple pumps, motor-pump units | **10** |
| **Technical data** | |
| General characteristics | **11** |
| Technical characteristics KF | **12** |
| Technical characteristics KF-F (for fuels) | **13** |
| Materials / Temperatures | **14** |
| Viscosity-dependent differential pressures / Characteristics of shaft seals | **15** |
| Discharge flow and required drive power | **16 - 19** |
| **Type key** | |
| KF (pump) | **20** |
| KF (mounted valve) | **21** |
| KF-F (for fuels) | **22** |
| **Atex** | **23** |
| **Dimensions and weights – Pumps** | **24 - 30** |
| **Dimensions and weights – Motor-pump units** | **31 - 34** |
| **Technical data** | |
| Standard motors | **35** |
| KF / KF-F 2.5 … 630 with magnetic coupling | **36** |
| **Technical data – accessories** | |
| Bellhousing, couplings, flanges | **37 - 40** |

# General

## KF / KF-F 2.5 … 630 – two-part housing

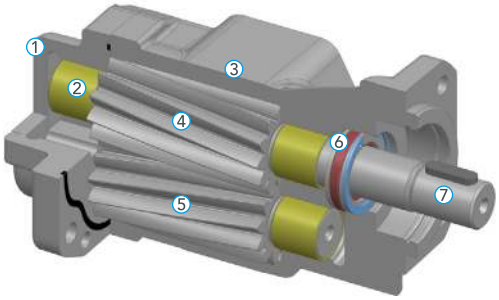


1 Housing cover
2 Bearing bush
3 Housing
4 Driving shaft
5 Driven shaft
6 Shaft seal
7 Driven shaft end with feather key

## KF / KF-F 2.5 … 630 with magnetic coupling (MAC)

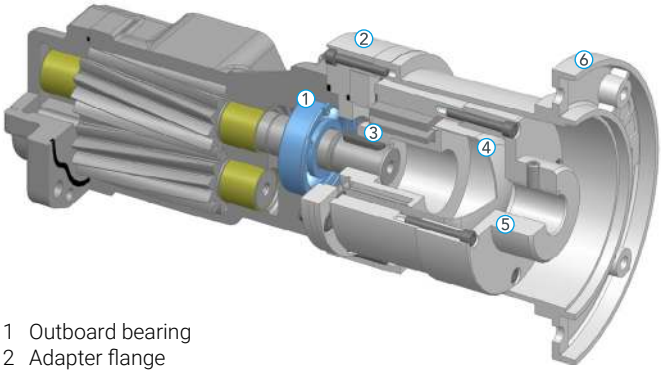


1 Outboard bearing
2 Adapter flange
3 Inner rotor
4 Containment shell
5 Outer rotor
6 Bellhousing

## KF 730 … 3150 – three-part housing

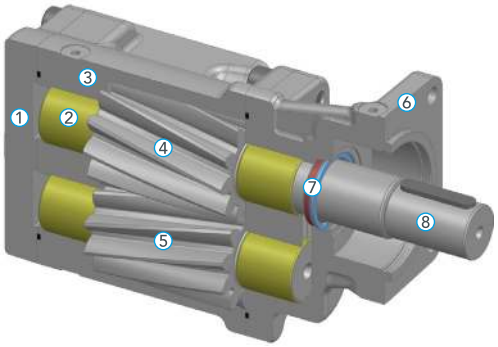


1 Housing cover
2 Bearing bush
3 Housing
4 Driving shaft
5 Driven shaft
6 Flange cover
7 Shaft seal
8 Driven shaft end with feather key

# General

## KF

Gear pumps from the KF low-pressure series are used to pump a wide variety of liquids. The KF gear pumps are characterised in particular by a wide range of variants and can also be retrofitted.

In the standard version, the housing parts of nominal sizes 2.5 … 1500 are made of grey cast iron, while those of nominal sizes 1800 … 3150 are made of spheroidal cast iron. The gear sets are made of high-strength case-hardened steel, hardened and mounted in special multi-material bearing bushes. The drive shaft is sealed by a radial shaft seal in the standard version and all sizes are designed with helical gearing. This, combined with a special gearing geometry, results in extremely low sound levels and low pressure pulsation.

## KF-F – for fuels

The KF-F gear pumps were specially developed for pumping fuels, especially marine fuels. These must be viewed critically with regard to lubricity. Reduced sulphur diesel fuels (MGO/DMA) in particular have a low lubricity, which cannot be determined via the viscosity.

The HFRR test in accordance with ISO 12156 is a recognised method for measuring the lubricity of diesel fuels. The characteristic value determined in this way is known as the Wear Scar Diameter (WSD) and increases with decreasing lubricity. This characteristic value is specified by fuel manufacturers and can be used to assess the durability of components.

KF-F fuel pumps are fatigue-resistant up to a WSD value of 520 µm, which represents the minimum lubricity of MGO and DMA in accordance with ISO 8217. In addition, the pumps are extremely efficient, especially at high speeds. The KF-F pump can be used without restrictions for pumping fuels with a low sulphur content, MGO/DMA (gas oil) in accordance with ISO 8217.

## KF with magnetic coupling (MAC)

Conventional seals reach their limits in various applications. Typical applications can be found in polyurethane systems, refrigeration machines and vacuum systems. For these applications, it is possible to equip the KF 2.5 … 630 with a magnetic coupling, which serves as a shaft seal and for transmitting the torque. The outer rotor of the magnetic coupling is mounted on the drive shaft and the inner rotor directly on the pump shaft. The torque is transmitted by the magnetic forces between the outer and inner rotor. The containment can is located between the two rotors and hermetically seals the pump.

The magnetic coupling is used when absolute tightness is required between the pump chamber and the atmosphere, e.g. when dosing isocyanate, where contact with air would lead to unwanted hardening of the medium. It can be used in vacuum operation, which reliably prevents air from entering the system (e.g. filling brake fluid) and also ensures leak-free operation when operating in closed systems with high inlet pressure on the pump suction side, making the magnetic coupling ideal for dosing hazardous and harmful media.

# General

## Functional principle

Gear pumps in the KF low-pressure series (up to 25 bar) are external gear pumps that operate according to the positive displacement principle. The fluid is transported from the suction side to the discharge side by rotating the two gear shafts (driving shaft and driven shaft) in the tooth gaps along the housing wall. The geometric delivery volume is displaced per gear wheel revolution. A value that is rounded to characterise the pump size as the nominal volume in technical documents.

Gear pumps are basically self-priming – extremely high viscosities may require a pre-pressure. The described displacement process initially takes place without pressure build-up. Only after external loads (delivery head, flow resistances or line elements) have been specified does the working pressure required to overcome these resistances materialise.

Suction side

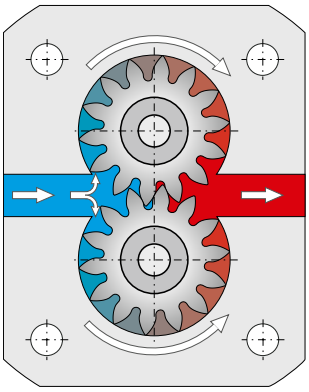

Pressure side

## Operating instructions

- The media must guarantee a certain minimum lubricity, be chemically compatible with the materials used and should not contain any coarse solid particles.
- The pumps may only be operated in the specified direction of rotation.
- A pressure relief valve in the system or on the pump is recommended to prevent impermissible overpressure of the pump.
- Dry running must be avoided.
- The optional pressure relief valve D or B fitted to the pump may only respond briefly during operation. Otherwise there is a risk of the pump overheating. To discharge a partial flow rate over a longer period of time, a valve with external discharge must be used.

## Direction of rotation

The following applies to the direction of rotation:

- When looking at the end of the pump shaft, the direction of delivery is from left to right if the shaft is rotating clockwise.
- When looking at the end of the pump shaft, the direction of delivery is from right to left if the shaft is rotating anti-clockwise.

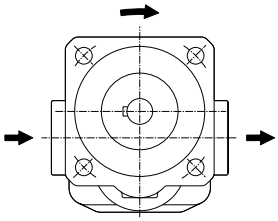

Suction side Pressure side
Pump clockwise running

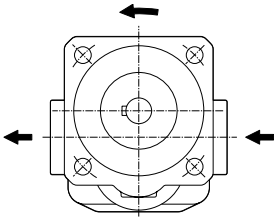

Pressure side Suction side
Pump anti-clockwise running

# Shaft seals

## Overview

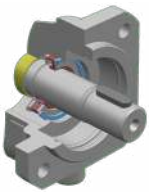

Single radial lip-type seal

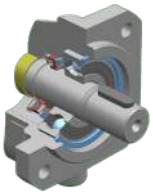

Single radial lip-type seal
and outboard bearing

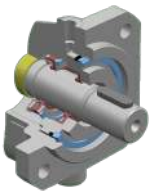

Double radial lip-type seal
and connection possibility for quench

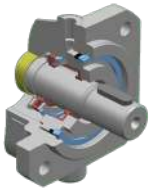

Double radial lip-type seal
for vacuum operation and
connection possibility for quench

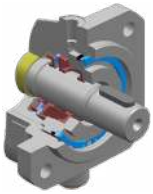

Triple radial lip-type seal without/with
connection possibility for quench

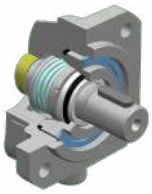

Mechanical seal

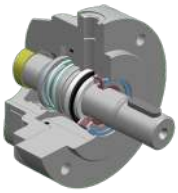

Mechanical seal
and connection possibility for quench

Without shaft sealing

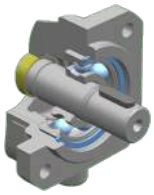

Without shaft sealing with outboard
bearing

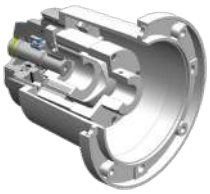

Magnetic coupling

# Valves

## Valves that can be mounted on gear pumps

**Pressure relief valves D / B**

**Type key ID: D**
**For nominal sizes 2.5 … 630**

**Type key ID: B**
**For nominal sizes 730 … 3150**

Gear pumps from the KF low-pressure series can optionally be equipped with a directly controlled pressure relief valve to protect the pump from impermissibly high pressure peaks. The valves have an adjustment option within the defined pressure range and are designed for a brief overflow of the flow rate. Special pressure relief and pressure control valves with an external outlet are available for permanent discharge of a volume flow.

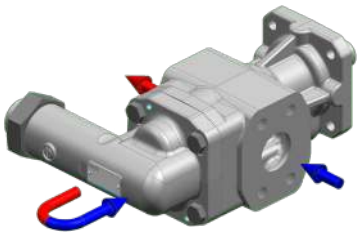

**Pressure relief valve T**

**Type key ID: T**
**For nominal sizes 32 … 80**

The directly controlled pressure relief valve attached to the pump can be used to control the pressure of the pump if the recirculation line on the valve is connected directly to the supply tank. The valve offers good control characteristics and good dynamics with vibration-free operation at all operating points of the pump thanks to customised damping.

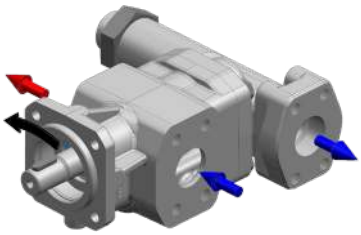

**Universal valve U**

**Type key ID: U**
**For nominal sizes 32 … 112**

Gear pumps with universal valve, which can be installed in any position, deliver to the same connection even when the direction of rotation changes.

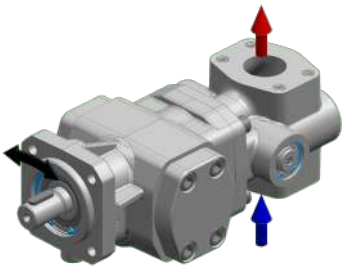

| | KF 2.5 … 630 | KF 2.5 … 630 MAC | KF-F 2.5 … 630 | KF 730 … 3150 |
|---|---|---|---|---|
| Mounted valve ID: D | • | • | • | - |
| Mounted valve ID: B | - | - | - | • |
| Mounted valve ID: T | 32 … 80 | 32 … 80 | - | - |
| Mounted valve ID: U | 32 … 112 | - | - | - |

• Available for all nominal sizes

# Valves

## Valves that can be integrated into pipes

The design of the valves that can be integrated into pipes depends on many factors, such as the pressure, flow rate, medium or viscosity. Our sales engineers will be happy to advise you and find the right solution for your application.

**SPV-valve**
The SPV-valve is a directly controlled pressure relief valve for installation in pipes and is used to protect hydraulic circuits.

Details: See SPV data sheet

**DV-valve**
DV-valves are hydraulically pilot operated and available in the following versions:

- Pressure relief valve DV B
- Pressure stage control valve DV S
- Pressure control valve DV R

Details: See DV data sheet

**HVF-valve**
The HV/HVF pressure relief valve is a pilot operated spool valve for installation in pipes and is therefore used to protect medium pressure hydraulic circuits up to 160 bar.The pipe connection can be made using an SAE flange (3000 psi) or Whitworth pipe thread (G).The spool pilot control means that the valve can also be used for higher viscosities.

Details: See HVF data sheet.

**DBD-valve**
The pressure relief valve DBD is a directly controlled seat valve for installation in pipes or as a screw-in valve. The valve is used for pressure relief in hydraulic systems up to 400 bar. The housing has two connections with Whitworth pipe threads for line attachment. Without a housing, the valve cartridge can also be screwed into the specified bore contour in any body instead.

Details: See DBD data sheet

# Variants / Options

## Noise optimisation for media with increased air content (special issue 197)

The noise-optimised versions of the KF low-pressure series are available from nominal size 4 and are designed for pumping media with an increased air content. Special constructional measures significantly reduce the usual increase in noise when conveying air-containing media. The noise levels are not or only insignificantly higher than the noise levels with non-air-containing media. There is also no shift in the noise spectrum towards higher, unpleasant frequencies. If this option is used without air in the medium, the noise values are not reduced. The use of a noise-optimised pump design reduces the flow rate by approx. 3 %.

**Note**
The noise-optimised version is also available in spheroidal cast iron.
Dimensions conform to standard gear pumps KF

The noise-optimised version of the KF pump is identified by the special number 197 at the end of the type code and the pumps with the special number 197 are built as pumps in combination with an electric motor or as add-on pumps. The pump in combination with an electric motor does not have an attachment bearing and must be driven via a flexible coupling; the add-on pump is equipped with an attachment bearing to absorb external radial forces, such as those that occur when using a flying pinion. Pumps for electric motor operation and add-on pumps are sealed at the shaft end by a radial shaft seal.

## Multiple pumps

**Properties and versions**
- Opposing flow direction possible
- High cold start viscosity possible at high idle speed
- High efficiency over wide speed ranges
- Hydraulically separated

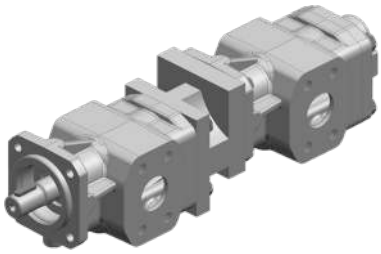

Gear pump KF + Gear pump KF

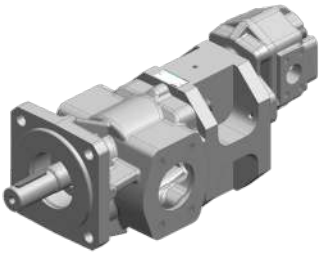

Gear pump KF + High-pressure gear pump KP

## Motor-pump units

**Motors that can be combined with KF pumps**
- Air motors
- Gear motors
- Hydraulic motors (for details, see data sheet KM)
- IEC electric motors in all common efficiency classes (up to IE4)
- Motors in Atex/IECEx design
- Motors with marine approval
- NEMA-motors

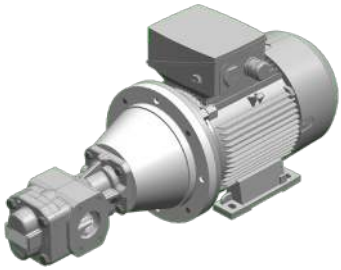

# Technical data

## General characteristics

| Mounting position | KF 2.5 … 630 | KF 2.5 … 630 MAC | KF-F 2.5 … 630 | KF 730 … 1500 | KF 1800 … 3150 |
|---|---|---|---|---|---|
| **Without quench** | Any | Any | Any | Any | Any |
| **With quench** | Horizontal quench on top | - | - | Horizontal quench on top | Horizontal quench on top |
| **Direction of rotation** | | | | | |
| **Clockwise or anti-clockwise** | • | • | • | • | • |
| **Clockwise and anti-clockwise** | • | - | - | • | • |
| **Mounting** | | | | | |
| **SAE flange** | - | - | - | • | • |
| **DIN flange** | • | • | • | - | - |
| **Mounting angle** | • | • | • | - | - |
| **Hydraulic connection** | | | | | |
| **Whitworth pipe thread, SAE flange** | KF 2.5 … 25 | KF 2.5 … 25 | KF-F 2.5 … 25 | - | - |
| **SAE flange** | • | • | • | - | - |
| **Flange connection DN 132 / BCD 180** | - | - | - | KF 730 / KF 1000 | - |
| **Flange connection DN 160 / BCD 210** | - | - | - | KF 1250 / KF 1500 | - |
| **Flange connection EN 1092/DN150/PN25** | - | - | - | - | KF 1800 / KF 2000 |
| **Flange connection EN 1092/DN200/PN25** | - | - | - | - | KF 2500 / KF 3150 |
| **Shaft seals** | | | | | |
| **Single radial lip-type seal** | • | - | • | • | • |
| **Double radial lip-type seal** | • | - | • | • | • |
| **Triple radial lip-type seal** | • | - | • | • | • |
| **Mechanical seal** | • | - | • | • | • |
| **Magnetic coupling** | • | • | • | - | - |
| **Driving shaft end** | | | | | |
| **Cylindrical with feather key (ISO R 775)** | • | • | • (short version) | - | - |
| **Cylindrical Ø 55 mm** | - | - | - | • | - |
| **Cylindrical Ø 70 mm** | - | - | - | - | • |
| **Optional**<br>**Internal thread**<br>**Tapered**<br>**With built-in nozzle**<br>**SAE-/DIN-toothed** | • | • | - | - | - |

# Technical data

## Technical characteristics KF

| Nominal size | Geom. displacement in $cm^3$/rev | Maximum pressure in bar | Speed range in 1/min | Viscosity* in $mm^2$/s | Maximum sound pressure level in dB (A) | | | |
|---|---|---|---|---|---|---|---|---|
| | | | | | 5 bar | 15 bar | 20 bar | 25 bar |
| **2.5** | 2.55 | 25 | 200 … 3600 | 1.4 / 12 … 100 000 | 65 | 66 | - | 67 |
| **4** | 4.03 | 25 | 200 … 3600 | 1.4 / 12 … 100 000 | 65 | 66 | - | 67 |
| **5** | 5.05 | 25 | 200 … 3600 | 1.4 / 12 … 100 000 | 65 | 66 | - | 67 |
| **6** | 6.38 | 25 | 200 … 3600 | 1.4 / 12 … 100 000 | 65 | 66 | - | 67 |
| **8** | 8.05 | 25 | 200 … 3600 | 1.4 / 12 … 100 000 | 65 | 66 | - | 67 |
| **10** | 10.11 | 25 | 200 … 3600 | 1.4 / 12 … 100 000 | 65 | 66 | - | 67 |
| **12** | 12.58 | 25 | 200 … 3600 | 1.4 / 12 … 100 000 | 65 | 66 | - | 67 |
| **16** | 16.09 | 25 | 200 … 3600 | 1.4 / 12 … 100 000 | 65 | 66 | - | 67 |
| **20** | 20.10 | 25 | 200 … 3600 | 1.4 / 12 … 100 000 | 65 | 66 | - | 67 |
| **25** | 25.10 | 25 | 200 … 3600 | 1.4 / 12 … 100 000 | 65 | 66 | - | 67 |
| **32** | 32.12 | 25 | 200 … 3600 | 1.4 / 12 … 100 000 | 65 | 66 | - | 67 |
| **40** | 40.21 | 25 | 200 … 3600 | 1.4 / 12 … 100 000 | 67 | 68 | - | 68 |
| **50** | 50.20 | 25 | 200 … 3600 | 1.4 / 12 … 100 000 | 67 | 68 | - | 68 |
| **63** | 63.18 | 25 | 200 … 3600 | 1.4 / 12 … 100 000 | 67 | 68 | - | 68 |
| **80** | 80.50 | 25 | 200 … 3000 | 1.4 / 12 … 100 000 | 67 | 68 | - | 68 |
| **100** | 101.50 | 25 | 200 … 3000 | 1.4 / 12 … 100 000 | 67 | 68 | - | 69 |
| **112** | 113.50 | 25 | 200 … 3000 | 1.4 / 12 … 100 000 | 67 | 68 | - | 69 |
| **125** | 129.40 | 25 | 200 … 3000 | 1.4 / 12 … 100 000 | 65 | 65 | - | 65 |
| **150** | 155.60 | 25 | 200 … 3000 | 1.4 / 12 … 100 000 | 65 | 65 | - | 65 |
| **180** | 186.60 | 25 | 200 … 3000 | 1.4 / 12 … 100 000 | 65 | 65 | - | 65 |
| **200** | 206.20 | 25 | 200 … 2500 | 1.4 / 12 … 100 000 | 65 | 65 | - | 65 |
| **250** | 245.10 | 25 | 200 … 2000 | 1.4 / 12 … 100 000 | 75 | 75 | - | 75 |
| **315** | 312.90 | 25 | 200 … 2000 | 1.4 / 12 … 100 000 | 75 | 75 | - | 75 |
| **400** | 399.50 | 25 | 200 … 2000 | 1.4 / 12 … 100 000 | 77 | 77 | - | 77 |
| **500** | 496.50 | 25 | 200 … 2000 | 1.4 / 12 … 100 000 | 77 | 77 | - | 77 |
| **630** | 622.50 | 25 | 200 … 2000 | 1.4 / 12 … 100 000 | 78 | 78 | - | 80 |
| **730** | 713.80 | 25 | 200 … 2000 | 1.4 / 12 … 20 000 | 80 | 81 | - | 81 |
| **1 000** | 985.70 | 25 | 200 … 2000 | 1.4 / 12 … 20 000 | 81 | 83 | - | 83 |
| **1 250** | 1236.20 | 25 | 200 … 2000 | 1.4 / 12 … 20 000 | 83 | 84 | - | 86 |
| **1 500** | 1473.00 | 20 | 200 … 2000 | 1.4 / 12 … 20 000 | 83 | 85 | 86 | - |
| **1 800** | On request | | | | | | | |
| **2 000** | | | | | | | | |
| **2 500** | | | | | | | | |
| **3 150** | | | | | | | | |

**Notes**

* 1.4 … 12 $mm^2$/s — Reduced maximum pressure
12 $mm^2$/s … — Maximum pressure possible

Speed restriction KF 32 … 112 with U-valve
Nominal size 32 … 50 — Maximum speed: 3000 1/min
Nominal size 63 … 112 — Maximum speed: 2200 1/min

Radial forces only for version with thrust bearing.
Axial forces are not permitted.

The speed of the pump must be selected so that complete filling of the pump is guaranteed. This is the case if the relative pressure at the pump inlet does not fall below -0.4 bar (temporarily -0.6 bar, e.g. during a cold start).

For certain operating conditions, the specified minimum and maximum parameters are not applicable. For example, the maximum operating pressure is not permissible in conjunction with low speed and low viscosity. Please contact us for such limit ranges.

Sound pressure level measured in dB(A) at a distance of 1 m with drive motor.
Installation location: Workshop
Parameters:
Pump assembly on rigid mounting bracket
Suction and discharge lines = hose measured with gear oil
Viscosity: 34 $mm^2$/s
Speed: 1500 1/min.

# Technical data

## Technical characteristics KF-F

| Nominal size | Geom. displacement in $cm^3$/rev | Maximum pressure in bar | | Speed range in 1/min | Viscosity in $mm^2/s$ | Maximum sound pressure level in dB (A) | | |
|---|---|---|---|---|---|---|---|---|
| | | Viscosity < 12 $mm^2/s$ | Viscosity ≥ 12 $mm^2/s$ | | | 5 bar | 15 bar | 25 bar |
| **2.5** | 2.55 | 12 | 25 | 200 … 3600 | 1.2 … 20 000 | 65 | 66 | 67 |
| **4** | 4.03 | 12 | 25 | 200 … 3600 | 1.2 … 20 000 | 65 | 66 | 67 |
| **5** | 5.05 | 12 | 25 | 200 … 3600 | 1.2 … 20 000 | 65 | 66 | 67 |
| **6** | 6.38 | 12 | 25 | 200 … 3600 | 1.2 … 20 000 | 65 | 66 | 67 |
| **8** | 8.05 | 12 | 25 | 200 … 3600 | 1.2 … 20 000 | 65 | 66 | 67 |
| **10** | 10.11 | 12 | 25 | 200 … 3600 | 1.2 … 20 000 | 65 | 66 | 67 |
| **12** | 12.58 | 12 | 25 | 200 … 3600 | 1.2 … 20 000 | 65 | 66 | 67 |
| **16** | 16.09 | 12 | 25 | 200 … 3600 | 1.2 … 20 000 | 65 | 66 | 67 |
| **20** | 20.10 | 12 | 25 | 200 … 3600 | 1.2 … 20 000 | 65 | 66 | 67 |
| **25** | 25.10 | 12 | 25 | 200 … 3600 | 1.2 … 20 000 | 65 | 66 | 67 |
| **32** | 32.12 | 12 | 25 | 200 … 3600 | 1.2 … 20 000 | 67 | 68 | 68 |
| **40** | 40.21 | 12 | 25 | 200 … 3600 | 1.2 … 20 000 | 67 | 68 | 68 |
| **50** | 50.20 | 12 | 25 | 200 … 3600 | 1.2 … 20 000 | 67 | 68 | 68 |
| **63** | 63.18 | 12 | 25 | 200 … 3600 | 1.2 … 20 000 | 67 | 68 | 68 |
| **80** | 80.50 | 12 | 25 | 200 … 3000 | 1.2 … 20 000 | 67 | 68 | 69 |
| **100** | 101.50 | 12 | 25 | 200 … 3000 | 1.2 … 20 000 | 67 | 68 | 69 |
| **112** | 113.50 | 12 | 25 | 200 … 3000 | 1.2 … 20 000 | 67 | 68 | 69 |
| **125** | 129.40 | 12 | 25 | 200 … 3000 | 1.2 … 20 000 | 70 | 70 | 70 |
| **150** | 155.60 | 12 | 25 | 200 … 3000 | 1.2 … 20 000 | 70 | 70 | 70 |
| **180** | 186.60 | 12 | 25 | 200 … 3000 | 1.2 … 20 000 | 70 | 70 | 70 |
| **200** | 206.20 | 12 | 25 | 200 … 2500 | 1.2 … 20 000 | 70 | 70 | 70 |
| **250** | 245.10 | 12 | 25 | 200 … 2000 | 1.2 … 20 000 | 75 | 75 | 75 |
| **315** | 312.90 | 12 | 25 | 200 … 2000 | 1.2 … 20 000 | 75 | 75 | 75 |
| **400** | 399.50 | 12 | 25 | 200 … 2000 | 1.2 … 20 000 | 77 | 77 | 77 |
| **500** | 496.50 | 12 | 25 | 200 … 2000 | 1.2 … 20 000 | 77 | 77 | 77 |
| **630** | 622.50 | 12 | 25 | 200 … 2000 | 1.2 … 20 000 | 80 | 80 | 80 |

**Notes**
For certain operating conditions, the specified minimum and maximum parameters are not applicable. For example, the maximum operating pressure is not permissible in conjunction with low speed and low viscosity. Please contact us for such limit ranges.

For fuels, the lubricity must be observed (WSD ≤ 520µm).

Sound pressure level measured in dB(A) at a distance of 1 m with drive motor.
Installation location: Workshop
Parameters:
Pump assembly on rigid mounting bracket
Suction and discharge lines = hose measured with gear oil
Viscosity: 34 $mm^2/s$
Speed: 1500 1/min.

# Technical data

## Materials

| | Housing and cover | KF 2.5 … 630 | KF 2.5 … 630 MAC | KF-F 2.5 … 630 | KF 730 … 1500 | KF 1800 … 3150 |
|---|---|---|---|---|---|---|
| Pump | EN-GJL-250 | • | • | - | • | - |
| | EN-GJS-400-15 | • | • | • | • | • |
| | **Gear sets** | | | | | |
| | Steel 1.7139 | • | • | • | • | • |
| | **Bearing bushes** | | | | | |
| | Multi-layer plain bearings | • | • | • | • | • |
| | Plastic plain bearings | • | • | - | - | - |
| | White metal plain bearings | • | • | - | - | - |
| | **Materials shaft seals** | | | | | |
| | NBR | • | - | - | • | • |
| | FKM | • | - | • | • | • |
| | FKM Low temperature | KF 2.5 … 200 | - | - | - | - |
| | **Materials O-rings** | | | | | |
| | NBR | • | • | - | • | • |
| | FKM | • | • | • | • | • |
| | FKM Low temperature | KF 2.5 … 200 | - | - | - | - |
| | **Corrosion protection** | | | | | |
| | C2m - RAL 7024 | • | • | • | • | • |
| Magnetic coupling | **Inner rotor** | | | | | |
| | Hub: Stainless steel 1.4571<br>Magnets: SmCo / NdFeB<br>Magnet cover: Stainless steel 1.4571 | • | • | • | • | • |
| | **Containment shell** | | | | | |
| | MS.46 / MS.60: 1.4571<br>MS.75 … MS.165: 1.4571 / Hastelloy<br>MS.75 …: PEEK*<br>MS.110 …: Oxide ceramic* | • | • | • | • | • |
| | **Outer rotor** | | | | | |
| | Hub: 355J2G3 (St 52)<br>Magnets: SmCo / NdFeB | • | • | • | • | • |
| Valves | **Housing mounted valve D** | | | | | |
| | EN-GJL-250 | • | • | • | - | - |
| | EN-GJS-400-15 | • | • | • | - | - |
| | **Housing mounted valve B** | | | | | |
| | EN-GJS-400-15 | • | - | - | • | • |
| | **Housing mounted valve T** | | | | | |
| | EN-GJS-400-15 | 32 … 80 | 32 … 80 | - | - | - |
| | **Housing mounted valve U** | | | | | |
| | EN-GJS-400-15 | 2.5 … 112 | - | - | - | - |

**Note**
In principle, materials within an assembly (pump / valve) must be selected identically.

## Temperatures

| Sealing material | Pump | Media temperature in °C | Ambient temperature in °C |
|---|---|---|---|
| FKM | KF 2.5 … 1500 | -20 … 150 | -20 … 60 |
| | KF 2.5 … 630 MAC | -20 … 150 | |
| | KF-F 2.5 … 630 | -20 … 150 | |
| | KF 1800 … 3150 | -30 … 150 | |
| NBR | KF 2.5 … 1500 | -20 … 90 | |
| | KF 2.5 … 630 MAC | -20 … 90 | |
| | KF 1800 … 3150 | -30 … 90 | |
| FKM Low temperature | KF 2.5 … 1500 | -30 … 150 | -30 … 60 |
| | KF 2.5 … 630 MAC | -30 … 150 | |
| On request | KF 2.5 … 3150 | -50 … 200 | |

**Note**
Other sealing materials on request.

# Technical data

## Viscosity-dependent differential pressures

| Bearings | Nominal size | $\Delta p_{max}$ in bar | | |
|---|---|---|---|---|
| | | ≥ 1.4 mm²/s | ≥ 6 mm²/s | ≥ 12 mm²/s |
| **Multi-layer plain bearings containing lead** | KF 2.5 … 630 | 3 | 12 | 25 |
| | KF 2.5 … 630 MAC | 3 | 12 | 25 |
| | KF-F 2.5 … 630 | 3 | 12 | 25 |
| | KF 730 … 1250 | 3 | 12 | 25 |
| | KF 1500 | 3 | 12 | 20 |
| | KF 1800 … 3150 | 3 | 12 | 16 |
| **Multi-layer plain bearings lead-free** | KF 2.5 … 630 | 3 | 12 | 25 |
| | KF 2.5 … 630 MAC | - | - | - |
| | KF-F 2.5 … 630 | | | |
| | KF 730 … 1250 | 3 | 12 | 25 |
| | KF 1500 | 3 | 12 | 20 |
| | KF 1800 … 3150 | 3 | 12 | 16 |
| **Plastic plain bearings** | KF 2.5 … 630 | - | 6 | 10 |
| | KF 2.5 … 630 MAC | - | 6 | 10 |
| | KF-F 2.5 … 630 | - | - | - |
| | KF 730 … 1500 | - | | |
| | KF 1800 … 3150 | - | | |
| **White metal plain bearings** | KF 2.5 … 630 | - | 6 | 10 |
| | KF 2.5 … 630 MAC | - | 6 | 10 |
| | KF-F 2.5 … 630 | - | - | - |
| | KF 730 … 1500 | - | | |
| | KF 1800 … 3150 | - | | |

## Characteristics of shaft seals KF 2.5 … 3150

| Seal type | Sealing material | Maximum speed in 1/min | Suction side pressure in bar (briefly during start-up: -0.6 bar) | | | | |
|---|---|---|---|---|---|---|---|
| | | | 2.5 … 80 | 100 … 200 | 250 … 315 | 400 … 1500 | 1800 … 3150 |
| **Single radial lip-type seal**<br>**Single radial lip-type seal and outboard bearing**<br>**Double radial lip-type seal and connection possibility for quench** | NBR<br>FKM | 750 | -0.4 … 6.0 | -0.4 … 6.0 | -0.4 … 5.5 | -0.4 … 5.0 | On request |
| | | 1000 | -0.4 … 5.0 | -0.4 … 5.0 | -0.4 … 4.5 | -0.4 … 4.0 | |
| | | 1500 | -0.4 … 4.0 | -0.4 … 3.5 | -0.4 … 3.0 | -0.4 … 2.5 | |
| | | 2000 | -0.4 … 3.0 | -0.4 … 2.5 | -0.4 … 2.0 | -0.4 … 1.5 | |
| | | 2500 | -0.4 … 2.5 | -0.4 … 2.0 | - | - | |
| | | 3000 | -0.4 … 2.0 | -0.4 … 1.5 | - | - | |
| | | 3600 | -0.4 … 1.5 | - | - | - | |
| | FKM<br>Low temperature | Independent of speed | -0.4 … 0.5 | | - | | |
| **Double radial lip-type seal for vacuum operation and connection possibility for quench** | NBR<br>FKM | Independent of speed | -0.9 … 0.2 | | | | |
| **Mechanical seal** | FKM | Independent of speed | -0.4 … 10.0 | | | | |
| **Magnetic coupling** | FKM | Independent of speed | -0.9 … 25<br>depending on pump (only KF 2.5 … 630) and magnetic coupling | | | | |

## Characteristics of shaft seals KF-F 2.5 … 630

| Seal type | Sealing material | Maximum speed in 1/min | Suction side pressure in bar | | | | | |
|---|---|---|---|---|---|---|---|---|
| | | | 2.5 … 63 | 80 | 100 … 180 | 200 | 250 … 315 | 400 … 630 |
| **Single radial lip-type seal**<br>**Double radial lip-type seal** | FKM | 750 | -0.4 … 6.0 | -0.4 … 6.0 | -0.4 … 6.0 | -0.4 … 6.0 | -0.4 … 5.5 | -0.4 … 5.0 |
| | | 1000 | -0.4 … 5.0 | -0.4 … 5.0 | -0.4 … 5.0 | -0.4 … 5.0 | -0.4 … 4.5 | -0.4 … 4.0 |
| | | 1500 | -0.4 … 4.0 | -0.4 … 4.0 | -0.4 … 3.5 | -0.4 … 3.5 | -0.4 … 3.0 | -0.4 … 2.5 |
| | | 2000 | -0.4 … 3.0 | -0.4 … 3.0 | -0.4 … 2.5 | -0.4 … 2.5 | -0.4 … 2.0 | -0.4 … 1.5 |
| | | 2500 | -0.4 … 2.5 | -0.4 … 2.5 | -0.4 … 2.0 | -0.4 … 2.0 | - | - |
| | | 3000 | -0.4 … 2.0 | -0.4 … 2.0 | -0.4 … 1.5 | - | - | - |
| | | 3600 | -0.4 … 1.5 | - | - | - | - | - |
| **Mechanical seal** | FKM-O-ring | Independent of speed | -0.4 … 10.0 | | | | | |
| **Magnetic coupling** | FKM-O-ring | Independent of speed | On request | | | | | |

**Note**
Other sealing materials on request.

# Technical data

## Discharge flow and required drive power for speed n = 950 1/min

Discharge flow in l/min

| Pressure in bar | | | | | | | | Nominal size |
|---|---|---|---|---|---|---|---|---|
| 2 | 4 | 6 | 8 | 10 | 15 | 20 | 25 | |
| 2.5 | 2.4 | 2.4 | 2.3 | 2.2 | 2.1 | 2.0 | 1.8 | **2.5** |
| 3.7 | 3.7 | 3.6 | 3.6 | 3.6 | 3.5 | 3.4 | 3.3 | **4** |
| 4.6 | 4.6 | 4.5 | 4.5 | 4.4 | 4.2 | 4.1 | 3.9 | **5** |
| 5.8 | 5.7 | 5.6 | 5.5 | 5.5 | 5.3 | 5.1 | 4.9 | **6** |
| 7.3 | 7.3 | 7.2 | 7.1 | 7.0 | 6.8 | 6.6 | 6.4 | **8** |
| 9.2 | 9.1 | 9.0 | 8.9 | 8.8 | 8.5 | 8.2 | 7.9 | **10** |
| 11.4 | 11.3 | 11.2 | 11.1 | 11.0 | 10.8 | 10.5 | 10.3 | **12** |
| 14.2 | 14.0 | 13.8 | 13.6 | 13.4 | 12.9 | 12.3 | 11.8 | **16** |
| 18.0 | 17.6 | 17.3 | 16.9 | 16.6 | 15.7 | 14.9 | 14.0 | **20** |
| 22.8 | 22.5 | 22.3 | 22.0 | 21.7 | 21.1 | 20.4 | 19.8 | **25** |
| 29.0 | 28.0 | 27.0 | 27.0 | 26.0 | 25.0 | 23.0 | 22.0 | **32** |
| 36.0 | 36.0 | 35.0 | 34.0 | 34.0 | 32.0 | 30.0 | 28.0 | **40** |
| 45.0 | 44.0 | 43.0 | 42.0 | 41.0 | 39.0 | 36.0 | 34.0 | **50** |
| 57.0 | 56.0 | 54.0 | 53.0 | 52.0 | 50.0 | 46.0 | 43.0 | **63** |
| 74.0 | 73.0 | 72.0 | 71.0 | 70.0 | 67.0 | 65.0 | 62.0 | **80** |
| 92.0 | 90.0 | 88.0 | 86.0 | 84.0 | 79.0 | 73.0 | 67.0 | **100** |
| 102.0 | 99.0 | 97.0 | 94.0 | 91.0 | 84.0 | 77.0 | 70.0 | **112** |
| 114.0 | 112.0 | 109.0 | 106.0 | 103.0 | 96.0 | 89.0 | 82.0 | **125** |
| 139.0 | 137.0 | 134.0 | 132.0 | 129.0 | 123.0 | 116.0 | 110.0 | **150** |
| 169.0 | 166.0 | 163.0 | 160.0 | 156.0 | 148.0 | 140.0 | 132.0 | **180** |
| 187.0 | 184.0 | 180.0 | 177.0 | 174.0 | 167.0 | 159.0 | 151.0 | **200** |
| 230.0 | 226.0 | 223.0 | 219.0 | 216.0 | 209.0 | 203.0 | 197.0 | **250** |
| 295.0 | 290.0 | 286.0 | 282.0 | 279.0 | 272.0 | 265.0 | 259.0 | **315** |
| 376.0 | 369.0 | 363.0 | 358.0 | 353.0 | 341.0 | 330.0 | 320.0 | **400** |
| 467.0 | 461.0 | 454.0 | 449.0 | 443.0 | 430.0 | 418.0 | 407.0 | **500** |
| 587.0 | 578.0 | 570.0 | 562.0 | 554.0 | 537.0 | 523.0 | 511.0 | **630** |
| 662.0 | 643.0 | 626.0 | 609.0 | 594.0 | 555.0 | 520.0 | 486.0 | **730** |
| 921.0 | 901.0 | 886.0 | 864.0 | 849.0 | 801.0 | 760.0 | 720.0 | **1000** |
| 1160.0 | 1140.0 | 1121.0 | 1103.0 | 1084.0 | 1041.0 | 1000.0 | 961.0 | **1250** |
| 1389.0 | 1371.0 | 1351.0 | 1335.0 | 1316.0 | 1270.0 | 1229.0 | - | **1500** |
| 1710.0 | 1685.0 | 1656.0 | 1634.0 | 1611.0 | 1549.0 | - | - | **1800** |
| 1910.0 | 1882.0 | 1849.0 | 1825.0 | 1799.0 | 1730.0 | - | - | **2000** |
| 2344.0 | 2309.0 | 2270.0 | 2239.0 | 2208.0 | 2123.0 | - | - | **2500** |
| 2946.0 | 2903.0 | 2853.0 | 2815.0 | 2776.0 | 2669.0 | - | - | **3150** |

Required drive power in kW

| Pressure in bar | | | | | | | |
|---|---|---|---|---|---|---|---|
| 2 | 4 | 6 | 8 | 10 | 15 | 20 | 25 |
| 0.03 | 0.04 | 0.05 | 0.06 | 0.08 | 0.09 | 0.11 | 0.13 |
| 0.04 | 0.05 | 0.07 | 0.08 | 0.09 | 0.13 | 0.16 | 0.20 |
| 0.04 | 0.06 | 0.08 | 0.10 | 0.11 | 0.16 | 0.20 | 0.25 |
| 0.05 | 0.07 | 0.09 | 0.12 | 0.14 | 0.19 | 0.25 | 0.30 |
| 0.06 | 0.09 | 0.11 | 0.14 | 0.17 | 0.24 | 0.31 | 0.38 |
| 0.07 | 0.10 | 0.14 | 0.17 | 0.21 | 0.29 | 0.38 | 0.47 |
| 0.08 | 0.12 | 0.16 | 0.21 | 0.25 | 0.36 | 0.47 | 0.58 |
| 0.09 | 0.15 | 0.20 | 0.26 | 0.31 | 0.45 | 0.60 | 0.74 |
| 0.10 | 0.18 | 0.25 | 0.32 | 0.39 | 0.56 | 0.74 | 0.92 |
| 0.12 | 0.21 | 0.30 | 0.39 | 0.48 | 0.70 | 0.92 | 1.14 |
| 0.16 | 0.30 | 0.40 | 0.50 | 0.60 | 0.90 | 1.20 | 1.50 |
| 0.25 | 0.40 | 0.50 | 0.60 | 0.80 | 1.10 | 1.50 | 1.80 |
| 0.30 | 0.50 | 0.60 | 0.80 | 1.00 | 1.40 | 1.90 | 2.30 |
| 0.40 | 0.60 | 0.80 | 1.00 | 1.20 | 1.80 | 2.40 | 2.90 |
| 0.60 | 0.80 | 1.10 | 1.40 | 1.60 | 2.30 | 3.00 | 3.70 |
| 0.70 | 1.00 | 1.30 | 1.60 | 1.90 | 2.70 | 3.60 | 4.50 |
| 0.90 | 1.20 | 1.60 | 2.00 | 2.40 | 3.30 | 4.30 | 5.20 |
| 1.00 | 1.40 | 1.80 | 2.30 | 2.80 | 3.90 | 5.00 | 6.10 |
| 1.10 | 1.60 | 2.10 | 2.60 | 3.20 | 4.50 | 5.80 | 7.20 |
| 1.20 | 1.80 | 2.40 | 3.00 | 3.60 | 5.10 | 6.60 | 8.10 |
| 1.40 | 2.10 | 2.80 | 3.40 | 4.00 | 5.70 | 7.30 | 9.00 |
| 1.50 | 2.30 | 3.10 | 4.00 | 4.80 | 6.80 | 8.90 | 10.90 |
| 2.00 | 3.00 | 4.00 | 5.10 | 6.10 | 8.70 | 11.20 | 13.80 |
| 2.60 | 3.80 | 5.10 | 6.40 | 7.70 | 11.00 | 14.30 | 17.50 |
| 3.30 | 4.90 | 6.50 | 8.10 | 9.80 | 13.90 | 18.00 | 22.10 |
| 4.50 | 6.60 | 8.70 | 10.70 | 12.80 | 18.10 | 23.30 | 28.60 |
| 4.60 | 6.90 | 9.20 | 11.60 | 14.00 | 20.00 | 26.00 | 32.00 |
| 7.40 | 9.30 | 13.70 | 15.90 | 20.30 | 27.20 | 35.40 | 43.60 |
| 8.50 | 12.60 | 16.80 | 20.70 | 24.90 | 35.10 | 45.30 | 55.60 |
| 10.30 | 15.10 | 20.00 | 24.80 | 29.80 | 42.00 | 54.20 | - |
| 17.00 | 23.10 | 29.10 | 35.00 | 40.70 | 55.60 | - | - |
| 19.00 | 25.80 | 32.50 | 39.10 | 45.40 | 62.10 | - | - |
| 23.30 | 31.60 | 39.80 | 48.00 | 55.70 | 76.20 | - | - |
| 29.30 | 39.80 | 50.10 | 60.30 | 70.10 | 95.80 | - | - |

**Notes**
- Scatter range of the flow rate +10 % … -5 % of the table value.
- The characteristics refer to a mineral oil with a viscosity of 34 $mm^2/s$.
- At a viscosity < 30 $mm^2/s$, reduce the flow rate.
- The power of the drive motor must be selected 15 % higher than the value in the table.
- For viscosities > 100 $mm^2/s$ , a supplement to the drive power is required.
- For noise-optimised versions, 3 % must be deducted from the flow rate.

# Technical data

## Discharge flow and required drive power for speed n = 1150 1/min

Discharge flow in l/min

| Pressure in bar | | | | | | | | Nominal size | Pressure in bar | | | | | | | |
|---|---|---|---|---|---|---|---|---|---|---|---|---|---|---|---|---|
| 2 | 4 | 6 | 8 | 10 | 15 | 20 | 25 | | 2 | 4 | 6 | 8 | 10 | 15 | 20 | 25 |
| 2.9 | 2.9 | 2.8 | 2.8 | 2.7 | 2.6 | 2.5 | 2.4 | **2.5** | 0.03 | 0.04 | 0.06 | 0.08 | 0.10 | 0.11 | 0.13 | 0.16 |
| 4.5 | 4.5 | 4.4 | 4.4 | 4.4 | 4.3 | 4.2 | 4.1 | **4** | 0.05 | 0.06 | 0.08 | 0.10 | 0.11 | 0.16 | 0.20 | 0.24 |
| 5.5 | 5.5 | 5.4 | 5.4 | 5.3 | 5.2 | 5.1 | 4.9 | **5** | 0.05 | 0.08 | 0.10 | 0.12 | 0.14 | 0.20 | 0.26 | 0.32 |
| 7.0 | 6.9 | 6.9 | 6.8 | 6.7 | 6.5 | 6.3 | 6.1 | **6** | 0.06 | 0.09 | 0.11 | 0.14 | 0.17 | 0.24 | 0.31 | 0.37 |
| 8.9 | 8.9 | 8.8 | 8.7 | 8.6 | 8.4 | 8.2 | 8.0 | **8** | 0.07 | 0.11 | 0.14 | 0.17 | 0.21 | 0.29 | 0.37 | 0.46 |
| 11.2 | 11.1 | 11.0 | 10.9 | 10.8 | 10.5 | 10.2 | 9.9 | **10** | 0.09 | 0.12 | 0.17 | 0.21 | 0.25 | 0.35 | 0.46 | 0.57 |
| 13.9 | 13.8 | 13.7 | 13.6 | 13.5 | 13.2 | 13.0 | 12.8 | **12** | 0.10 | 0.15 | 0.20 | 0.25 | 0.31 | 0.44 | 0.57 | 0.70 |
| 17.4 | 17.2 | 17.0 | 16.7 | 16.5 | 15.9 | 15.3 | 14.8 | **16** | 0.12 | 0.19 | 0.27 | 0.34 | 0.41 | 0.60 | 0.79 | 0.98 |
| 22.0 | 21.6 | 21.2 | 20.9 | 20.5 | 19.6 | 18.7 | 17.8 | **20** | 0.13 | 0.22 | 0.31 | 0.39 | 0.47 | 0.68 | 0.90 | 1.12 |
| 27.8 | 27.5 | 27.3 | 27.0 | 26.7 | 26.0 | 25.3 | 24.6 | **25** | 0.17 | 0.26 | 0.37 | 0.48 | 0.58 | 0.85 | 1.12 | 1.38 |
| 35.0 | 34.0 | 33.0 | 33.0 | 32.0 | 31.0 | 29.0 | 28.0 | **32** | 0.20 | 0.40 | 0.50 | 0.60 | 0.80 | 1.10 | 1.50 | 1.80 |
| 44.0 | 44.0 | 43.0 | 42.0 | 42.0 | 40.0 | 38.0 | 36.0 | **40** | 0.30 | 0.50 | 0.70 | 0.80 | 1.00 | 1.40 | 1.80 | 2.20 |
| 55.0 | 54.0 | 53.0 | 52.0 | 51.0 | 49.0 | 46.0 | 44.0 | **50** | 0.40 | 0.60 | 0.80 | 1.00 | 1.20 | 1.80 | 2.30 | 2.80 |
| 69.0 | 68.0 | 67.0 | 66.0 | 65.0 | 62.0 | 59.0 | 56.0 | **63** | 0.50 | 0.80 | 1.00 | 1.30 | 1.50 | 2.20 | 2.90 | 3.50 |
| 90.0 | 89.0 | 88.0 | 87.0 | 86.0 | 83.0 | 81.0 | 79.0 | **80** | 0.70 | 1.00 | 1.40 | 1.70 | 2.00 | 2.80 | 3.60 | 4.50 |
| 113.0 | 111.0 | 109.0 | 107.0 | 105.0 | 100.0 | 95.0 | 91.0 | **100** | 0.90 | 1.20 | 1.60 | 2.00 | 2.30 | 3.30 | 4.40 | 5.50 |
| 126.0 | 123.0 | 121.0 | 118.0 | 115.0 | 109.0 | 103.0 | 97.0 | **112** | 1.10 | 1.50 | 2.00 | 2.40 | 2.90 | 4.10 | 5.30 | 6.40 |
| 141.0 | 138.0 | 135.0 | 132.0 | 129.0 | 122.0 | 115.0 | 108.0 | **125** | 1.30 | 1.80 | 2.20 | 2.80 | 3.40 | 4.70 | 6.00 | 7.30 |
| 171.0 | 169.0 | 166.0 | 164.0 | 161.0 | 155.0 | 148.0 | 142.0 | **150** | 1.50 | 2.00 | 2.70 | 3.20 | 3.90 | 5.50 | 7.00 | 8.70 |
| 207.0 | 204.0 | 201.0 | 198.0 | 194.0 | 186.0 | 178.0 | 170.0 | **180** | 1.60 | 2.40 | 3.10 | 3.80 | 4.50 | 6.30 | 8.10 | 9.90 |
| 229.0 | 226.0 | 229.0 | 219.0 | 216.0 | 209.0 | 201.0 | 193.0 | **200** | 1.90 | 2.70 | 3.50 | 4.30 | 5.00 | 7.10 | 9.00 | 11.00 |
| 280.0 | 276.0 | 273.0 | 269.0 | 266.0 | 259.0 | 253.0 | 247.0 | **250** | 2.10 | 3.10 | 4.10 | 5.10 | 6.10 | 8.60 | 11.10 | 13.50 |
| 359.0 | 354.0 | 350.0 | 346.0 | 343.0 | 336.0 | 329.0 | 323.0 | **315** | 2.80 | 4.10 | 5.30 | 6.60 | 7.80 | 10.90 | 14.00 | 17.20 |
| 457.0 | 451.0 | 445.0 | 440.0 | 435.0 | 423.0 | 412.0 | 402.0 | **400** | 3.80 | 5.30 | 6.90 | 8.40 | 10.00 | 14.00 | 17.90 | 21.90 |
| 568.0 | 561.0 | 555.0 | 550.0 | 544.0 | 532.0 | 520.0 | 509.0 | **500** | 4.90 | 6.90 | 8.80 | 10.70 | 12.80 | 17.70 | 22.70 | 27.70 |
| 713.0 | 704.0 | 697.0 | 689.0 | 682.0 | 665.0 | 652.0 | 640.0 | **630** | 6.70 | 9.20 | 11.80 | 14.30 | 16.80 | 23.30 | 29.60 | 36.10 |
| 810.0 | 791.0 | 774.0 | 758.0 | 743.0 | 705.0 | 669.0 | 636.0 | **730** | 6.40 | 9.30 | 12.20 | 15.00 | 17.90 | 25.20 | 32.50 | 39.70 |
| 1119.0 | 1100.0 | 1084.0 | 1064.0 | 1047.0 | 1005.0 | 969.0 | 925.0 | **1000** | 8.80 | 12.70 | 17.40 | 20.60 | 24.60 | 34.30 | 45.20 | 54.30 |
| 1411.0 | 1393.0 | 1376.0 | 1358.0 | 1342.0 | 1300.0 | 1259.0 | 1223.0 | **1250** | 12.70 | 17.60 | 22.40 | 27.60 | 32.30 | 44.80 | 57.20 | 69.40 |
| 1682.0 | 1666.0 | 1651.0 | 1634.0 | 1616.0 | 1575.0 | 1534.0 | - | **1500** | 15.40 | 20.50 | 26.50 | 32.60 | 38.40 | 53.20 | 68.40 | - |
| 2079.0 | 2056.0 | 2036.0 | 2014.0 | 1987.0 | 1931.0 | - | - | **1800** | 25.60 | 32.80 | 39.80 | 47.00 | 54.30 | 72.60 | - | - |
| 2322.0 | 2296.0 | 2274.0 | 2249.0 | 2219.0 | 2156.0 | - | - | **2000** | 28.60 | 36.60 | 44.50 | 52.50 | 60.70 | 81.10 | - | - |
| 2850.0 | 2818.0 | 2791.0 | 2760.0 | 2724.0 | 2647.0 | - | - | **2500** | 35.00 | 44.90 | 54.60 | 64.40 | 74.50 | 99.50 | - | - |
| 3583.0 | 3543.0 | 3508.0 | 3470.0 | 3424.0 | 3327.0 | - | - | **3150** | 44.10 | 56.50 | 68.60 | 81.00 | 93.60 | 125.10 | - | - |

Required drive power in kW

**Notes**
- Scatter range of the flow rate +10 % … -5 % of the table value.
- The characteristics refer to a mineral oil with a viscosity of 34 $mm^2/s$.
- At a viscosity < 30 $mm^2/s$, reduce the flow rate.
- The power of the drive motor must be selected 15 % higher than the value in the table.
- For viscosities > 100 $mm^2/s$ , a supplement to the drive power is required.
- For noise-optimised versions, 3 % must be deducted from the flow rate.

# Technical data

## Discharge flow and required drive power for speed n = 1450 1/min

Discharge flow in l/min

| Pressure in bar | | | | | | | | Nominal size |
|---|---|---|---|---|---|---|---|---|
| 2 | 4 | 6 | 8 | 10 | 15 | 20 | 25 | |
| 3.6 | 3.6 | 3.5 | 3.5 | 3.5 | 3.4 | 3.3 | 3.2 | **2.5** |
| 5.7 | 5.7 | 5.6 | 5.6 | 5.5 | 5.4 | 5.4 | 5.3 | **4** |
| 6.9 | 6.8 | 6.8 | 6.7 | 6.7 | 6.6 | 6.5 | 6.4 | **5** |
| 8.9 | 8.8 | 8.8 | 8.7 | 8.6 | 8.4 | 8.2 | 8.0 | **6** |
| 11.3 | 11.2 | 11.1 | 11.0 | 10.9 | 10.8 | 10.6 | 10.4 | **8** |
| 14.2 | 14.1 | 14.1 | 13.8 | 13.7 | 13.4 | 13.1 | 12.8 | **10** |
| 17.6 | 17.5 | 17.4 | 17.3 | 17.2 | 16.9 | 16.7 | 16.5 | **12** |
| 22.2 | 21.9 | 21.7 | 21.4 | 21.2 | 20.5 | 19.9 | 19.3 | **16** |
| 27.9 | 27.5 | 27.1 | 26.8 | 26.4 | 25.5 | 24.5 | 23.6 | **20** |
| 35.3 | 35.0 | 34.7 | 34.4 | 34.1 | 33.3 | 32.6 | 31.8 | **25** |
| 45.0 | 44.0 | 43.0 | 43.0 | 42.0 | 41.0 | 39.0 | 37.0 | **32** |
| 57.0 | 56.0 | 55.0 | 55.0 | 54.0 | 52.0 | 50.0 | 48.0 | **40** |
| 70.0 | 69.0 | 68.0 | 67.0 | 66.0 | 64.0 | 61.0 | 58.0 | **50** |
| 88.0 | 87.0 | 86.0 | 85.0 | 84.0 | 81.0 | 78.0 | 75.0 | **63** |
| 114.0 | 113.0 | 112.0 | 111.0 | 110.0 | 107.0 | 105.0 | 103.0 | **80** |
| 144.0 | 142.0 | 140.0 | 138.0 | 137.0 | 131.0 | 128.0 | 126.0 | **100** |
| 161.0 | 159.0 | 157.0 | 154.0 | 152.0 | 147.0 | 142.0 | 138.0 | **112** |
| 181.0 | 178.0 | 175.0 | 172.0 | 169.0 | 162.0 | 155.0 | 147.0 | **125** |
| 218.0 | 216.0 | 213.0 | 211.0 | 209.0 | 203.0 | 197.0 | 191.0 | **150** |
| 264.0 | 261.0 | 257.0 | 254.0 | 251.0 | 242.0 | 234.0 | 226.0 | **180** |
| 293.0 | 290.0 | 287.0 | 283.0 | 280.0 | 272.0 | 264.0 | 256.0 | **200** |
| 356.0 | 352.0 | 348.0 | 344.0 | 341.0 | 334.0 | 327.0 | 321.0 | **250** |
| 455.0 | 450.0 | 446.0 | 442.0 | 439.0 | 431.0 | 424.0 | 418.0 | **315** |
| 579.0 | 573.0 | 567.0 | 562.0 | 557.0 | 545.0 | 535.0 | 524.0 | **400** |
| 719.0 | 712.0 | 707.0 | 701.0 | 696.0 | 684.0 | 673.0 | 662.0 | **500** |
| 902.0 | 894.0 | 887.0 | 880.0 | 874.0 | 858.0 | 845.0 | 834.0 | **630** |
| 1029.0 | 1012.0 | 995.0 | 980.0 | 966.0 | 930.0 | 896.0 | 862.0 | **730** |
| 1413.0 | 1399.0 | 1383.0 | 1367.0 | 1351.0 | 1314.0 | 1273.0 | 1236.0 | **1000** |
| 1783.0 | 1765.0 | 1750.0 | 1735.0 | 1720.0 | 1682.0 | 1644.0 | 1609.0 | **1250** |
| 2130.0 | 2116.0 | 2101.0 | 2087.0 | 2072.0 | 2034.0 | 1998.0 | - | **1500** |
| 2629.0 | 2616.0 | 2586.0 | 2571.0 | 2555.0 | 2509.0 | - | - | **1800** |
| 2936.0 | 2921.0 | 2888.0 | 2871.0 | 2853.0 | 2803.0 | - | - | **2000** |
| 3603.0 | 3585.0 | 3545.0 | 3524.0 | 3502.0 | 3440.0 | - | - | **2500** |
| 4529.0 | 4507.0 | 4456.0 | 4430.0 | 4402.0 | 4324.0 | - | - | **3150** |

Required drive power in kW

| Pressure in bar | | | | | | | |
|---|---|---|---|---|---|---|---|
| 2 | 4 | 6 | 8 | 10 | 15 | 20 | 25 |
| 0.04 | 0.05 | 0.08 | 0.10 | 0.12 | 0.14 | 0.16 | 0.20 |
| 0.06 | 0.08 | 0.10 | 0.12 | 0.15 | 0.20 | 0.25 | 0.30 |
| 0.07 | 0.10 | 0.12 | 0.15 | 0.19 | 0.27 | 0.35 | 0.43 |
| 0.08 | 0.11 | 0.15 | 0.18 | 0.22 | 0.32 | 0.39 | 0.47 |
| 0.09 | 0.14 | 0.18 | 0.22 | 0.26 | 0.37 | 0.47 | 0.58 |
| 0.11 | 0.16 | 0.21 | 0.27 | 0.32 | 0.45 | 0.58 | 0.72 |
| 0.12 | 0.19 | 0.26 | 0.32 | 0.39 | 0.55 | 0.72 | 0.89 |
| 0.16 | 0.26 | 0.37 | 0.47 | 0.57 | 0.82 | 1.08 | 1.33 |
| 0.17 | 0.28 | 0.39 | 0.49 | 0.60 | 0.87 | 1.14 | 1.41 |
| 0.24 | 0.34 | 0.47 | 0.61 | 0.74 | 1.08 | 1.41 | 1.75 |
| 0.30 | 0.50 | 0.70 | 0.80 | 1.00 | 1.40 | 1.90 | 2.30 |
| 0.40 | 0.60 | 0.90 | 1.10 | 1.30 | 1.80 | 2.30 | 2.90 |
| 0.50 | 0.80 | 1.10 | 1.30 | 1.60 | 2.30 | 2.90 | 3.60 |
| 0.70 | 1.00 | 1.30 | 1.70 | 2.00 | 2.90 | 3.70 | 4.50 |
| 0.90 | 1.40 | 1.80 | 2.20 | 2.60 | 3.60 | 4.60 | 5.70 |
| 1.20 | 1.60 | 2.00 | 2.50 | 3.00 | 4.30 | 5.70 | 7.00 |
| 1.40 | 2.00 | 2.60 | 3.10 | 3.70 | 5.20 | 6.70 | 8.20 |
| 1.70 | 2.30 | 2.90 | 3.60 | 4.20 | 5.80 | 7.40 | 9.00 |
| 2.00 | 2.70 | 3.50 | 4.20 | 5.00 | 6.90 | 8.90 | 11.00 |
| 2.30 | 3.20 | 4.10 | 5.00 | 5.90 | 8.20 | 10.40 | 12.70 |
| 2.60 | 3.60 | 4.60 | 5.60 | 6.60 | 9.10 | 11.60 | 14.00 |
| 3.10 | 4.30 | 5.60 | 6.80 | 8.10 | 11.20 | 14.30 | 17.40 |
| 4.10 | 5.70 | 7.20 | 8.80 | 10.40 | 14.30 | 18.30 | 22.20 |
| 5.60 | 7.50 | 9.50 | 11.50 | 13.50 | 18.40 | 23.40 | 28.50 |
| 7.40 | 9.80 | 12.20 | 14.70 | 17.20 | 23.40 | 29.70 | 36.10 |
| 10.10 | 13.20 | 16.40 | 19.60 | 22.90 | 31.00 | 39.10 | 47.40 |
| 10.40 | 14.00 | 17.60 | 21.20 | 24.80 | 34.00 | 43.10 | 52.50 |
| 14.60 | 19.50 | 24.50 | 29.50 | 34.60 | 47.90 | 59.50 | 71.80 |
| 21.10 | 26.90 | 33.20 | 39.70 | 45.80 | 61.30 | 77.20 | 92.30 |
| 24.30 | 31.60 | 39.30 | 46.90 | 54.20 | 73.00 | 91.70 | - |
| 42.30 | 50.80 | 60.90 | 69.60 | 79.00 | 100.90 | - | - |
| 47.30 | 56.70 | 68.00 | 77.70 | 88.30 | 112.70 | - | - |
| 58.00 | 69.60 | 83.50 | 95.40 | 108.30 | 138.30 | - | - |
| 72.90 | 87.50 | 104.90 | 119.90 | 136.20 | 173.80 | - | - |

**Notes**
- Scatter range of the flow rate +10 % … -5 % of the table value.
- The characteristics refer to a mineral oil with a viscosity of 34 $mm^2/s$.
- At a viscosity < 30 $mm^2/s$, reduce the flow rate.
- The power of the drive motor must be selected 15 % higher than the value in the table.
- For viscosities > 100 $mm^2/s$ , a supplement to the drive power is required.
- For noise-optimised versions, 3 % must be deducted from the flow rate.

# Technical data

## Discharge flow and required drive power for speed n = 1750 1/min

| Discharge flow in l/min | | | | | | | | Nominal size | Required drive power in kW | | | | | | | |
|---|---|---|---|---|---|---|---|---|---|---|---|---|---|---|---|---|
| Pressure in bar | | | | | | | | | Pressure in bar | | | | | | | |
| 2 | 4 | 6 | 8 | 10 | 15 | 20 | 25 | | 2 | 4 | 6 | 8 | 10 | 15 | 20 | 25 |
| 4.3 | 4.3 | 4.2 | 4.2 | 4.3 | 4.2 | 4.1 | 4.0 | **2.5** | 0.05 | 0.06 | 0.10 | 0.12 | 0.14 | 0.17 | 0.19 | 0.24 |
| 6.9 | 6.9 | 6.8 | 6.8 | 6.6 | 6.5 | 6.6 | 6.5 | **4** | 0.07 | 0.10 | 0.12 | 0.14 | 0.19 | 0.24 | 0.3 | 0.36 |
| 8.3 | 8.1 | 8.2 | 8.0 | 8.1 | 8.0 | 7.9 | 7.9 | **5** | 0.09 | 0.12 | 0.14 | 0.18 | 0.24 | 0.34 | 0.44 | 0.54 |
| 10.8 | 10.7 | 10.7 | 10.6 | 10.5 | 10.3 | 10.1 | 9.9 | **6** | 0.10 | 0.13 | 0.19 | 0.22 | 0.27 | 0.40 | 0.47 | 0.57 |
| 13.7 | 13.5 | 13.4 | 13.3 | 13.2 | 13.2 | 13.0 | 12.8 | **8** | 0.11 | 0.17 | 0.22 | 0.27 | 0.31 | 0.45 | 0.57 | 0.70 |
| 17.2 | 17.1 | 17.2 | 16.7 | 16.6 | 16.3 | 16.0 | 15.7 | **10** | 0.13 | 0.20 | 0.25 | 0.33 | 0.39 | 0.55 | 0.70 | 0.87 |
| 21.3 | 21.2 | 21.1 | 21.0 | 20.9 | 20.6 | 20.4 | 20.2 | **12** | 0.14 | 0.23 | 0.32 | 0.39 | 0.47 | 0.66 | 0.87 | 1.08 |
| 27.0 | 26.6 | 26.4 | 26.1 | 25.9 | 25.1 | 24.5 | 23.8 | **16** | 0.20 | 0.33 | 0.47 | 0.60 | 0.73 | 1.04 | 1.37 | 1.68 |
| 33.8 | 33.4 | 33.0 | 32.7 | 32.3 | 31.4 | 30.3 | 29.4 | **20** | 0.21 | 0.34 | 0.47 | 0.59 | 0.73 | 1.06 | 1.38 | 1.70 |
| 42.8 | 42.5 | 42.1 | 41.8 | 41.5 | 40.6 | 39.9 | 39.0 | **25** | 0.31 | 0.42 | 0.57 | 0.74 | 0.90 | 1.31 | 1.70 | 2.12 |
| 55.0 | 54.0 | 53.0 | 53.0 | 52.0 | 51.0 | 49.0 | 46.0 | **32** | 0.40 | 0.60 | 0.90 | 1.00 | 1.20 | 1.70 | 2.30 | 2.80 |
| 70.0 | 68.0 | 67.0 | 68.0 | 66.0 | 64.0 | 62.0 | 60.0 | **40** | 0.50 | 0.70 | 1.10 | 1.40 | 1.60 | 2.20 | 2.80 | 3.60 |
| 85.0 | 84.0 | 83.0 | 82.0 | 81.0 | 79.0 | 76.0 | 72.0 | **50** | 0.60 | 1.00 | 1.40 | 1.60 | 2.00 | 2.80 | 3.50 | 4.40 |
| 107.0 | 106.0 | 105.0 | 104.0 | 103.0 | 100.0 | 97.0 | 94.0 | **63** | 0.90 | 1.20 | 1.60 | 2.10 | 2.50 | 3.60 | 4.50 | 5.50 |
| 138.0 | 137.0 | 136.0 | 135.0 | 134.0 | 131.0 | 129.0 | 127.0 | **80** | 1.10 | 1.70 | 2.20 | 2.70 | 3.20 | 4.40 | 5.60 | 6.90 |
| 175.0 | 173.0 | 171.0 | 169.0 | 169.0 | 162.0 | 162.0 | 161.0 | **100** | 1.50 | 2.00 | 2.40 | 3.00 | 3.70 | 5.30 | 7.00 | 8.50 |
| 196.0 | 195.0 | 193.0 | 190.0 | 189.0 | 185.0 | 181.0 | 179.0 | **112** | 1.70 | 2.50 | 3.20 | 3.80 | 4.50 | 6.30 | 8.10 | 10.00 |
| 221.0 | 218.0 | 215.0 | 212.0 | 209.0 | 202.0 | 195.0 | 186.0 | **125** | 2.10 | 2.80 | 3.60 | 4.40 | 5.00 | 6.90 | 8.80 | 10.70 |
| 265.0 | 263.0 | 260.0 | 258.0 | 257.0 | 251.0 | 246.0 | 240.0 | **150** | 2.50 | 3.40 | 4.30 | 5.20 | 6.10 | 8.30 | 10.80 | 13.30 |
| 321.0 | 318.0 | 313.0 | 310.0 | 308.0 | 298.0 | 290.0 | 282.0 | **180** | 3.00 | 4.00 | 5.10 | 6.20 | 7.30 | 10.10 | 12.70 | 15.50 |
| 357.0 | 354.0 | 351.0 | 347.0 | 344.0 | 335.0 | 327.0 | 319.0 | **200** | 3.30 | 4.50 | 5.70 | 6.90 | 8.20 | 11.10 | 14.20 | 17.00 |
| 432.0 | 428.0 | 423.0 | 419.0 | 416.0 | 409.0 | 401.0 | 395.0 | **250** | 4.10 | 5.50 | 7.10 | 8.50 | 10.10 | 13.80 | 17.50 | 21.30 |
| 551.0 | 546.0 | 542.0 | 538.0 | 535.0 | 526.0 | 519.0 | 513.0 | **315** | 5.40 | 7.30 | 9.10 | 11.00 | 13.00 | 17.70 | 22.60 | 27.20 |
| 701.0 | 695.0 | 689.0 | 684.0 | 679.0 | 667.0 | 658.0 | 646.0 | **400** | 7.40 | 9.70 | 12.10 | 14.60 | 17.00 | 22.80 | 28.90 | 31.50 |
| 870.0 | 863.0 | 859.0 | 852.0 | 848.0 | 836.0 | 826.0 | 815.0 | **500** | 9.90 | 12.70 | 15.60 | 18.70 | 21.60 | 29.10 | 36.70 | 44.50 |
| 1091.0 | 1084.0 | 1077.0 | 1071.0 | 1066.0 | 1051.0 | 1038.0 | 1028.0 | **630** | 13.50 | 17.20 | 21.00 | 24.90 | 29.00 | 38.70 | 48.60 | 58.70 |
| 1247.0 | 1230.0 | 1214.0 | 1200.0 | 1187.0 | 1152.0 | 1120.0 | 1087.0 | **730** | 15.90 | 20.10 | 24.40 | 28.80 | 33.00 | 44.10 | 55.00 | 66.30 |
| 1711.0 | 1697.0 | 1682.0 | 1667.0 | 1653.0 | 1620.0 | 1582.0 | 1547.0 | **1000** | 22.30 | 28.20 | 34.20 | 40.10 | 46.30 | 62.40 | 76.10 | 91.20 |
| 2150.0 | 2135.0 | 2124.0 | 2111.0 | 2097.0 | 2062.0 | 2029.0 | 1995.0 | **1250** | 31.40 | 38.80 | 46.40 | 53.90 | 61.80 | 80.90 | 99.30 | 117.90 |
| 2568.0 | 2556.0 | 2543.0 | 2531.0 | 2519.0 | 2488.0 | 2457.0 | - | **1500** | 37.40 | 46.40 | 55.10 | 64.00 | 73.50 | 96.60 | 117.40 | - |

**Notes**
- Scatter range of the flow rate +10 % … -5 % of the table value.
- The characteristics refer to a mineral oil with a viscosity of 34 $mm^2/s$.
- At a viscosity < 30 $mm^2/s$, reduce the flow rate.
- The power of the drive motor must be selected 15 % higher than the value in the table.
- For viscosities > 100 $mm^2/s$ , a supplement to the drive power is required.
- For noise-optimised versions, 3 % must be deducted from the flow rate.

# Type key KF

| Pump | | | | | | | | | | | | | | | | | | | | | | | Mounted valve | | | | | | | |
|---|---|---|---|---|---|---|---|---|---|---|---|---|---|---|---|---|---|---|---|---|---|---|---|---|---|---|---|---|---|---|
| KF | 80 | 2 | F | 1 | 0 | A | 2 | Z | D | 2 | 0 | 0 | G | G | E | 0 | G | X | D | / | 197 | + | D | 2 | F | 2 | X | 15 | / | 001 |
| 1 | 2 | 3 | 4 | 5 | 6 | 7 | 8 | 9 | 10 | 11 | 12 | 13 | 14 | 15 | 16 | 17 | 18 | 19 | 20 | | 21 | | 22 | 23 | 24 | 25 | 26 | 27 | | 28 |

| 1 Product | |
|---|---|
| **KF** | Low-pressure gear pump |

| 2 Nominal size |
|---|
| **2.5 · 4 · 5 · 6 · 8 · 10 · 12 · 16 · 20 · 25 · 32 · 40 · 50 · 63 · 80 · 100 · 112 · 125 · 150 · 180 · 200 · 250 · 315 · 400 · 500 · 630 · 730 · 1000 · 1250 · 1500 · 1800 · 2000 · 2500 · 3150** |

| 3 Housing material | |
|---|---|
| **2** | EN-GJS-400-15 |
| **6** | EN-GJL-250 |

| 4 Sealing material | |
|---|---|
| **C** | CR |
| **E** | EPDM |
| **F** | FKM |
| **G** | FFKM |
| **H** | HNBR |
| **L** | FKM Low temperature |
| **N** | NBR |
| **P** | FEP |
| **Q** | PTFE |

| 5 Direction of rotation | | Direction of delivery |
|---|---|---|
| **1** | Clockwise | Right |
| **2** | Anti-clockwise | Left |
| **3** | Clockwise and anti-clockwise | Right and left |
| **4** | Clockwise and anti-clockwise | One direction (only in conjunction with valve U) |

| 6 Outboard bearing | |
|---|---|
| **0** | Without |
| **V** | With |

| 7 Flange type | | | Nominal size |
|---|---|---|---|
| **A** | Four-hole flange | DIN ISO 3019 | 2.5 … 80 / 250 … 630 |
| **B** | Four-hole flange | Base DIN ISO 3019 | 100 … 200 |
| | SAE connections on request | | |

| 8 Flange cover material | |
|---|---|
| **0** | Without |
| **2** | EN-GJS-400-15 |
| **6** | EN-GJL-250 |

| 9 Shaft end | | Nominal size |
|---|---|---|
| **Z** | Cylindrical shaft end | 2.5 … 3150 |
| **E** | Cylindrical shaft end with centring hole to DIN 332 | 2.5 … 630 |
| | Splined shaft profiles on request | |

| 10 Type of ending | |
|---|---|
| **D** | Cover |
| **V** | Valve |

| 11 Cover material | |
|---|---|
| **0** | Without (only at 10: **V**) |
| **2** | EN-GJS-400-15 |
| **6** | EN-GJL-250 |

| 12 2. Shaft end | |
|---|---|
| **0** | Without |
| **1** | With |

| 13 Axial clearance compensation | |
|---|---|
| **0** | Without |

| 14 Suction side connection | | | Standard | Option |
|---|---|---|---|---|
| **A** | Whitworth pipe thread G3/4 | | 2.5 … 12 | - |
| | Whitworth pipe thread G1 | | 16 … 25 | - |
| **B** | Flange connection | DN132/BCD180 | 730 … 1000 | - |
| | Flange connection | DN160/BCD210 | 1250 … 1500 | - |
| | Flange connection | | 1800 … 3150 | - |
| **C** | SAE 3/4″ | M10 - 15 deep | 2.5 … 12 | - |
| **D** | SAE 1″ | M10 - 17 deep | - | 16 … 25 |
| **G** | SAE 1 1/2″ | M12 - 20 deep | 32 … 80 | - |
| **I** | SAE 2″ | M12 - 20 deep | 100 … 112 | 50 … 80 |
| **J** | SAE 2 1/2″ | M12 - 20 deep | 125 … 150 | 100 … 112 |
| **L** | SAE 3″ | M16 - 32 deep | 180 … 315 | 125 … 150 |
| **M** | SAE 3 1/2″ | M16 - 32 deep | - | 180 … 315 |
| **N** | SAE 4″ | M16 - 32 deep | 400 … 630 | - |
| **P** | SAE 5″ | M16 - 32 deep | - | 400 … 630 |

| 15 Pressure side connection | | | Standard | Option |
|---|---|---|---|---|
| **A** | Whitworth pipe thread G3/4 | | 2.5 … 12 | - |
| | Whitworth pipe thread G1 | | 16 … 25 | - |
| **B** | Flange connection | DN132/BCD180 | 730 … 1000 | - |
| | Flange connection | DN160/BCD210 | 1250 … 1500 | - |
| | Flange connection | | 1800 … 3150 | - |
| **C** | SAE 3/4″ | M10 - 15 deep | 2.5 … 12 | - |
| **D** | SAE 1″ | M10 - 17 deep | - | 16 … 25 |
| **G** | SAE 1 1/2″ | M12 - 20 deep | 32 … 80 | - |
| **I** | SAE 2″ | M12 - 20 deep | 100 … 112 | 50 … 80 |
| **J** | SAE 2 1/2″ | M12 - 20 deep | 125 … 150 | 100 … 112 |
| **L** | SAE 3″ | M16 - 32 deep | 180 … 315 | 125 … 150 |
| **M** | SAE 3 1/2″ | M16 - 32 deep | - | 180 … 315 |
| **N** | SAE 4″ | M16 - 32 deep | 400 … 630 | - |
| **P** | SAE 5″ | M16 - 32 deep | - | 400 … 630 |

| 16 Gear sets material | | Nominal size |
|---|---|---|
| **E** | Case-hardening steel 16MnCrS5 - 1.7139 | 2.5 … 630 |
| **B** | Alloyed heat-treated steel 42CrMo4V - 1.7225 | 730 … 3150 |

| 17 Gear sets coating | |
|---|---|
| **0** | Without |

| 18 Bearing type | |
|---|---|
| **G** | Plain bearing |

| 19 Bearing material | |
|---|---|
| **D** | Multi-layer plain bearings (leaded) |
| **E** | Multi-layer plain bearings (lead-free) |
| **X** | Plastic plain bearing |

| 20 Seal type | |
|---|---|
| **0** | Without |
| **W** | Single radial lip-type seal |
| **D** | Double radial lip-type seal without quench connection |
| **E** | Double radial lip-type seal with quench connection |
| **F** | Triple radial lip-type seal without quench connection |
| **G** | Triple radial lip-type seal with quench connection |
| **H** | Mechanical seal |
| **J** | Mechanical seal with pre-mounted radial lip-type seal and quench connection |
| **M** | Magnetic coupling with flushing |
| **N** | Magnetic coupling without flushing |

| 21 Special number | |
|---|---|
| **0** | Without |
| **197** | Noise-optimised for media with increased air content |
| **503** | Noise-optimised for media with increased air content and pressure lubrication |

**Mounted valve see next page**

**Notes**
Materials within an assembly (pump and valve) and connections (suction and discharge side) must always be selected identically.
Atex on request.

# Type key KF (mounted valve)

| Pump | | | | | | | | | | | | | | | | | | | | | | | Mounted valve | | | | | | | | |
|---|---|---|---|---|---|---|---|---|---|---|---|---|---|---|---|---|---|---|---|---|---|---|---|---|---|---|---|---|---|---|---|
| KF | 80 | 2 | F | 1 | 0 | A | 2 | Z | D | 2 | 0 | 0 | G | G | E | 0 | G | X | D | / | 197 | + | D | 2 | F | 2 | X | 15 | / | 00. |
| 1 | 2 | 3 | 4 | 5 | 6 | 7 | 8 | 9 | 10 | 11 | 12 | 13 | 14 | 15 | 16 | 17 | 18 | 19 | 20 | | 21 | | 22 | 23 | 24 | 25 | 26 | 27 | | 28 |

| 22 Valve | 23 KF size | 24 Seal | 25 Housing material | 26 Bearing bush | 27 Pressure stage | 28 Special number |
|---|---|---|---|---|---|---|
| D | **1** 2.5 … 25<br>**2** 32 … 80<br>**3** 100 … 112<br>**4** 125 … 200<br>**5** 250 … 315<br>**6** 400 … 630 | **C** CR<br>**E** EPDM<br>**F** FKM<br>**G** FFKM<br>**H** HNBR<br>**L** FKM Low temp.<br>**N** NBR<br>**P** FEP<br>**Q** PTFE | **6** EN-GJL-250<br>**2** EN-GJS-400-15 | **D** Multi-layer plain bearings (leaded)<br>**E** Multi-layer plain bearing (lead-free)<br>**X** Plastic plain bearing | **15** 1 … 15 bar<br>**25** 15 … 25 bar<br>**30** 15 … 30 bar | Without<br>**00.** On request |
| B | **7** 730 … 1500<br>**8** 1800 … 3150 | **F** FKM<br>**N** NBR<br>**H** HNBR<br>**C** CR | **2** EN-GJS-400-15 | **D** Multi-layer plain bearings (leaded)<br>**E** Multi-layer plain bearing (lead-free)<br>**X** Plastic plain bearing | **25** 3 … 25 bar | |
| R | **1** 2.5 … 25<br>**2** 32 … 80<br>**7** 730 … 1500<br>**8** 1800 … 3150 | **F** FKM<br>**N** NBR<br>**H** HNBR<br>**C** CR | **2** EN-GJS-400-15 | **D** Multi-layer plain bearings (leaded)<br>**E** Multi-layer plain bearing (lead-free)<br>**X** Plastic plain bearing | **09** 3 … 9 bar<br>**12** 3 … 12 bar | |
| T | **2** 32 … 80 | **N** NBR<br>**F** FKM | **2** EN-GJS-400-15 | **D** Multi-layer plain bearings (leaded)<br>**E** Multi-layer plain bearing (lead-free)<br>**X** Plastic plain bearing | **15** 1 … 15 bar<br>**25** 15 … 25 bar | Without<br>**00.** On request |
| U | **2** 32 … 80<br>**3** 100 … 112 | **N** NBR<br>**F** FKM<br>**P** FEP | **2** EN-GJS-400-15 | **D** Multi-layer plain bearings (leaded)<br>**E** Multi-layer plain bearing (lead-free)<br>**X** Plastic plain bearing | **00** Not defined | 12 … 300 $mm^2/s$<br>**002** 300 … 1 000 $mm^2/s$<br>**003** 1 000 … 10 000 $mm^2/s$ |

**Notes**
Materials within an assembly (pump and valve) and connections (suction and discharge side) must always be selected identically.
Atex on request.

# Type key KF-F

| Pump | | | | | | | | | | | | | | | | | | | | | | | Mounted valve | | | | | | | |
|---|---|---|---|---|---|---|---|---|---|---|---|---|---|---|---|---|---|---|---|---|---|---|---|---|---|---|---|---|---|---|
| KF-F | 80 | 2 | F | 1 | 0 | A | 0 | Z | D | 2 | 0 | 0 | G | G | E | 0 | G | D | E | / | 00. | + | D | 2 | F | 2 | D | 15 | / | 00. |
| 1 | 2 | 3 | 4 | 5 | 6 | 7 | 8 | 9 | 10 | 11 | 12 | 13 | 14 | 15 | 16 | 17 | 18 | 19 | 20 | | 21 | | 22 | 23 | 24 | 25 | 26 | 27 | | 28 |

| 1 Product | |
|---|---|
| KF-F | Low-pressure gear pump especially for fuel applications |

| 2 Nominal size |
|---|
| 2.5 · 4 · 5 · 6 · 8 · 10 · 12 · 16 · 20 · 25 · 32 · 40 · 50 · 63 · 80 · 100 · 112 · 125 · 150 · 180 · 200 · 250 · 315 · 400 · 500 · 630 |

| 3 Housing material | |
|---|---|
| 2 | EN-GJS-400-15 |

| 4 Sealing material | |
|---|---|
| F | FKM |

| 5 Direction of rotation | | Direction of delivery |
|---|---|---|
| 1 | Clockwise | Right |
| 2 | Anti-clockwise | Left |
| 3 | Clockwise and anti-clockwise | Right and left |

| 6 Outboard bearing | |
|---|---|
| 0 | Without |
| V | With |

| 7 Flange type | | | Nominal size |
|---|---|---|---|
| A | Four-hole flange | DIN ISO 3019 | 2.5 … 80 / 250 … 630 |
| B | Four-hole flange | Base DIN ISO 3019 | 100 … 200 |
| | SAE connections on request | | |

| 8 Flange cover material | |
|---|---|
| 0 | Without |

| 9 Shaft end | |
|---|---|
| Z | Cylindrical shaft end |

| 10 Type of ending | |
|---|---|
| 0 | Without |
| D | Cover |
| V | Valve |

| 11 Cover material | |
|---|---|
| 0 | Without |
| 2 | EN-GJS-400-15 (only at 10: D) |

| 12 2. Shaft end | |
|---|---|
| 0 | Without |

| 13 Axial clearance compensation | |
|---|---|
| 0 | Without |

| 14 Suction side connection | | | Standard | Option |
|---|---|---|---|---|
| A | Whitworth pipe thread G3/4 | | 2.5 … 12 | |
| | Whitworth pipe thread G1 | | 16 … 25 | |
| C | SAE 3/4″ | M10 - 15 deep | 2.5 … 12 | - |
| D | SAE 1″ | M10 - 17 deep | - | 16 … 25 |
| G | SAE 1 1/2″ | M12 - 20 deep | 32 … 80 | - |
| I | SAE 2″ | M12 - 20 deep | 100 … 112 | 50 … 80 |
| J | SAE 2 1/2″ | M12 - 20 deep | 125 … 150 | 100 … 112 |
| L | SAE 3″ | M16 - 32 deep | 180 … 315 | 125 … 150 |
| M | SAE 3 1/2″ | M16 - 32 deep | - | 180 … 315 |
| N | SAE 4″ | M16 - 32 deep | 400 … 630 | - |
| P | SAE 5″ | M16 - 32 deep | - | 400 … 630 |

| 15 Pressure side connection | | | Standard | Option |
|---|---|---|---|---|
| A | Whitworth pipe thread G3/4 | | 2.5 … 12 | |
| | Whitworth pipe thread G1 | | 16 … 25 | |
| C | SAE 3/4″ | M10 - 15 deep | 2.5 … 12 | - |
| D | SAE 1″ | M10 - 17 deep | - | 16 … 25 |
| G | SAE 1 1/2″ | M12 - 20 deep | 32 … 80 | - |
| I | SAE 2″ | M12 - 20 deep | 100 … 112 | 50 … 80 |
| J | SAE 2 1/2″ | M12 - 20 deep | 125 … 150 | 100 … 112 |
| L | SAE 3″ | M16 - 32 deep | 180 … 315 | 125 … 150 |
| M | SAE 3 1/2″ | M16 - 32 deep | - | 180 … 315 |
| N | SAE 4″ | M16 - 32 deep | 400 … 630 | - |
| P | SAE 5″ | M16 - 32 deep | - | 400 … 630 |

| 16 Gear sets material | |
|---|---|
| E | Case-hardening steel 16MnCrS5 - 1.7139 |

| 17 Gear sets coating | |
|---|---|
| 0 | Without |

| 18 Bearing type | |
|---|---|
| G | Plain bearing |

| 19 Bearing material | |
|---|---|
| D | Multi-layer plain bearings (leaded) |

| 20 Seal type | |
|---|---|
| W | Single radial lip-type seal |
| E | Double radial lip-type seal and quench connection |
| H | Mechanical seal |
| M | Magnetic coupling with flushing |

| 21 Special number | |
|---|---|
| | Without |
| 00. | On request |

| 22 Mounted valve | |
|---|---|
| D | Pressure relief valve |

| 23 KF size | |
|---|---|
| 1 | 2.5 … 25 |
| 2 | 32 … 80 |
| 3 | 100 … 112 |
| 4 | 125 … 200 |
| 5 | 250 … 315 |
| 6 | 400 … 630 |

| 24 Seal | |
|---|---|
| F | FKM |

| 25 Housing material | |
|---|---|
| 2 | EN-GJS-400-15 |

| 26 Bearing bush | |
|---|---|
| D | Multi-layer plain bearings (leaded) |

| 27 Pressure stage | |
|---|---|
| 15 | 1 … 15 bar |
| 25 | 15 … 25 bar |
| 30 | 15 … 30 bar |

| 28 Special number | |
|---|---|
| | Without |
| 00. | On request |

**Notes**
Materials within an assembly (pump and valve) and connections (suction and discharge side) must always be selected identically.
Atex on request.

# Atex version

## Permitted areas of application

Depending on the labeling, our explosion-proof pump versions in accordance with directive 2014/34/EU may be used as follows:

**1. In the zone 2 (Gas-Ex, category 3G) in the explosion groups IIA, IIB und IIC**

**2. In the zone 22 (Dust-Ex, category 3D) in the explosion groups IIIA und IIIB**

**3. In the zone 1 (Gas-Ex, category 2G) in the explosion groups IIA, IIB und IIC**

**4. In the zone 21 (Dust-Ex, category 2D) in the explosion groups IIIA und IIIB**

## Characteristics

| | | | |
|---|---|---|---|
| **Nominal size** | 2.5 · 4 · 5 · 6 · 8 · 10 · 12 · 16 · 20 · 25 · 32 · 40 · 50 · 63 · 80 · 100 · 112 · 125 · 150 · 180 · 200 | | |
| **Working pressure suction side** | -0.4 … 0.5 bar | | |
| **Working pressure pressure side** | 25 bar | | |
| **Differential pressure** | See table differential pressure (Page 15) | | |
| **Mounting position** | Horizontal or shaft end down,<br>Versions with connection for horizontal liquid supply.<br>Vertical installation with shaft end on top (Special number 277). | | |
| **Ambient temperature** | NBR<br>FKM | -20 … 60 °C<br>-15 … 60 °C | |
| **Media temperature** | NBR<br>FKM<br>FKM | -20 … 80 °C<br>-15 … 80 °C<br>-15 … 110 °C | (T4)<br>(T4)<br>(T3) |
| **Device temperature** | NBR<br>FKM | -20 … 80 °C<br>-15 … 130 °C | (T4)<br>(T3/T4) |

The maximum temperatures must not be exceeded. An application-dependent self-heating of the devices must be taken into account.

**Consultancy**
For expert advice, please get in touch with your contact person in the sales department or give us a call (+49 2392.935 0).

# Dimensions and weights

## KF / KF-F 2.5 … 25 with pipe thread

### Version with housing cover

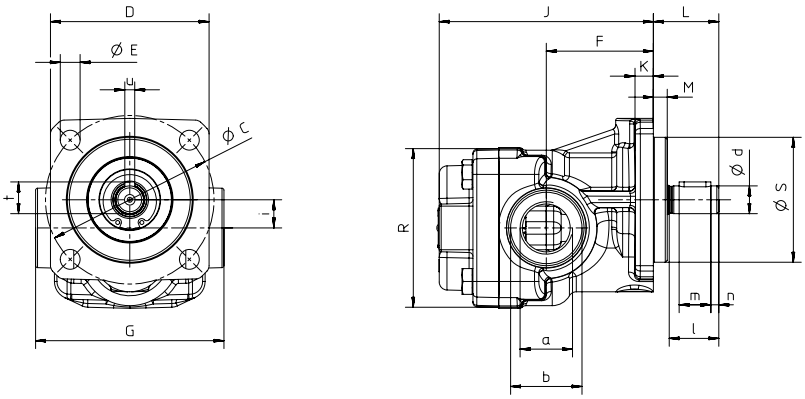


### Version with pressure relief valve (type code ID: D)

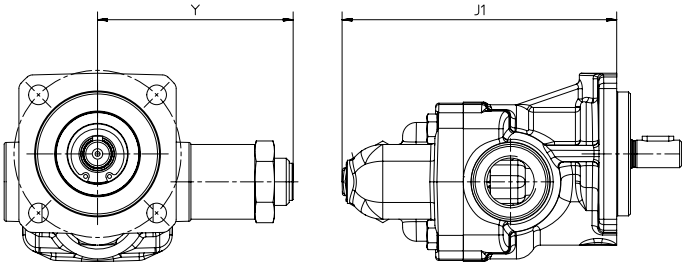


| Nominal size | Suction and pressure connection | | Housing | | | | | | | | | | | | | | Shaft end | | | | | | Weight | |
|---|---|---|---|---|---|---|---|---|---|---|---|---|---|---|---|---|---|---|---|---|---|---|---|---|
| | a | b | C | D | E | F | G | J | J1 | K | L | M | R | $S_{h8}$ | i | Y | $d_{j6}$ | l | m | n | t | u | without valve | with valve |
| **2.5 … 12** | G3/4 | Ø 36 | 85 | 80 | 10 | 54 | 95 | 108 | 140 | 9 | 33 | 7 | 80 | 63 | 14.2 | 100 | 14 | 25 | 16 | 4 | 16 | 5 | 2.9 | 3.7 |
| **16 … 25** | G1 - 19 deep | Ø 42 | 85 | 80 | 10 | 63 | 95 | 130 | 162 | 9 | 33 | 7 | 80 | 63 | 14.2 | 100 | 14 | 25 | 16 | 4 | 16 | 5 | 3.5 | 4.3 |

Dimensions in mm / Weights in kg

# Dimensions and weights

## KF / KF-F 2.5 … 630 with SAE connection

### Version with housing cover

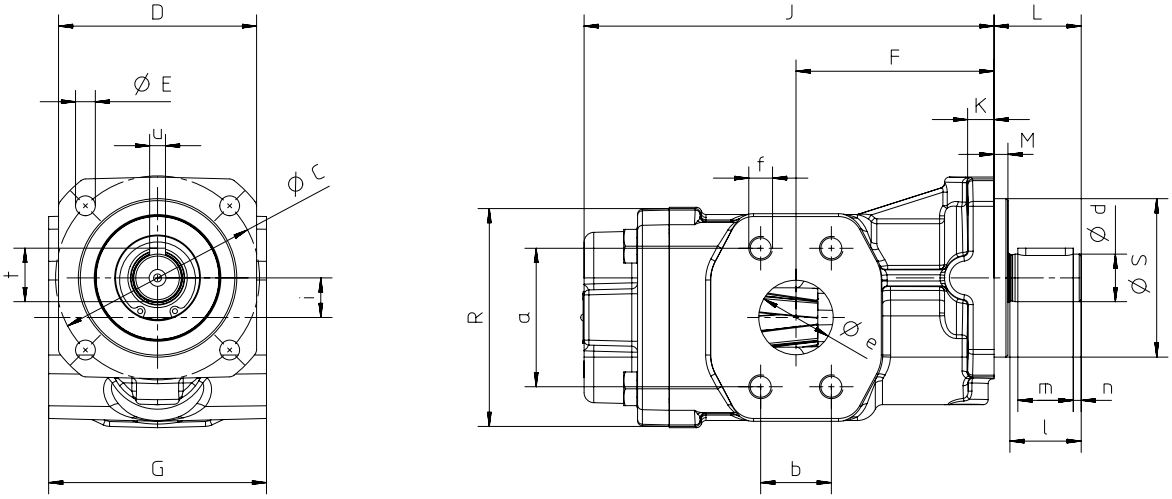


### Version with pressure relief valve (type code ID: D)

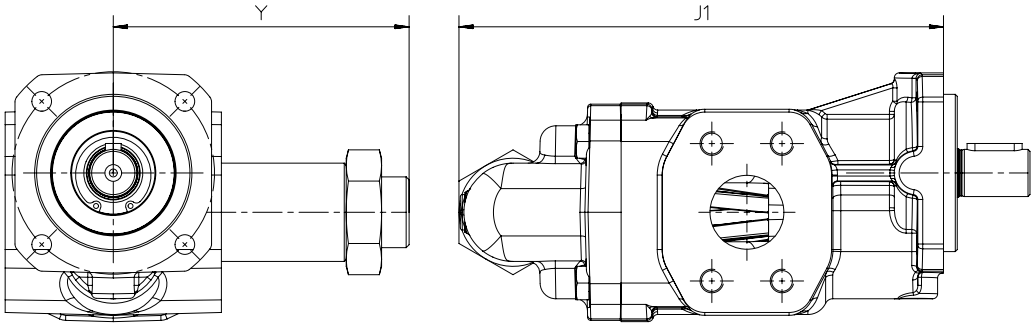


| Nominal size | SAE | Suction and pressure connection | | | | Housing | | | | | | | | | | | | | | Shaft end | | | | | | Weight | |
|---|---|---|---|---|---|---|---|---|---|---|---|---|---|---|---|---|---|---|---|---|---|---|---|---|---|---|---|
| | | a | b | e | f | C | D | E | F | G | J | J1 | K | L | M | R | $S_{h8}$ | i | Y | $d_{j6}$ | l | m | n | t | u | without valve | with valve |
| **2.5 … 12** | ³/₄″ | 47.6 | 22.2 | 19.5 | M10-15 deep | 85 | 80 | 10 | 54 | 100 | 108.0 | 140.0 | 9 | 33 | 7 | 80 | 63 | 14.2 | 99.5 | 14 | 25 | 16 | 4 | 16 | 5 | 4.2 | 5.0 |
| **16 … 25** | 1″ | 52.4 | 26.2 | 25.0 | M10-17 deep | 85 | 80 | 10 | 63 | 100 | 130.0 | 162.0 | 9 | 33 | 7 | 80 | 63 | 14.2 | 99.5 | 14 | 25 | 16 | 4 | 16 | 5 | 4.8 | 5.6 |
| **32 … 50** | 1½″ | 69.9 | 35.7 | 38.0 | M12-20 deep | 103 | 100 | 10 | 84 | 110 | 172.0 | 211.5 | 13 | 44 | 7 | 110 | 80 | 20.0 | 150.5 | 24 | 36 | 28 | 4 | 27 | 8 | 7.7 | 9.5 |
| **50** | 2″ | 77.8 | 42.9 | 50.0 | M12-20 deep | 103 | 100 | 10 | 84 | 110 | 172.0 | 211.5 | 13 | 44 | 7 | 110 | 80 | 20.0 | 150.5 | 24 | 36 | 28 | 4 | 27 | 8 | 7.7 | 9.5 |
| **63/80** | 1½″ | 69.9 | 35.7 | 38.0 | M12-20 deep | 103 | 100 | 10 | 100 | 110 | 207.0 | 246.5 | 13 | 44 | 7 | 110 | 80 | 20.0 | 150.5 | 24 | 36 | 28 | 4 | 27 | 8 | 9.4 | 11.2 |
| **63/80** | 2″ | 77.8 | 42.9 | 50.0 | M12-20 deep | 103 | 100 | 10 | 100 | 110 | 207.0 | 246.5 | 13 | 44 | 7 | 110 | 80 | 20.0 | 150.5 | 24 | 36 | 28 | 4 | 27 | 8 | 9.4 | 11.2 |
| **100/112** | 2″ | 77.8 | 42.9 | 50.8 | M12-20 deep | 145 | 135 | 14 | 102 | 130 | 220.5 | 262.5 | 17 | 60 | 8 | 128 | 110 | 23.7 | 170.5 | 28 | 50 | 40 | 5 | 31 | 8 | 16.0 | 18.7 |
| **100/112** | 2½″ | 88.9 | 50.8 | 63.5 | M12-20 deep | 145 | 135 | 14 | 102 | 130 | 220.5 | 262.5 | 17 | 60 | 8 | 128 | 110 | 23.7 | 170.5 | 28 | 50 | 40 | 5 | 31 | 8 | 16.0 | 18.7 |
| **125/150** | 2½″ | 88.9 | 50.8 | 63.5 | M12-20 deep | 145 | 135 | 14 | 120 | 150 | 245.0 | 282.0 | 18 | 60 | 8 | 159 | 110 | 23.7 | 170.5 | 28 | 50 | 40 | 5 | 31 | 8 | 22.2 | 24.9 |
| **125/150** | 3″ | 106.4 | 61.9 | 76.2 | M16- 32 deep | 145 | 135 | 14 | 120 | 150 | 245.0 | 282.0 | 18 | 60 | 8 | 159 | 110 | 23.7 | 170.5 | 28 | 50 | 40 | 5 | 31 | 8 | 22.2 | 24.9 |
| **180/200** | 3″ | 106.4 | 61.9 | 76.2 | M16- 32 deep | 145 | 135 | 14 | 130 | 150 | 261.5 | 298.5 | 18 | 60 | 8 | 159 | 110 | 23.7 | 170.5 | 28 | 50 | 40 | 5 | 31 | 8 | 24.8 | 27.5 |
| **180/200** | 3½″ | 120.7 | 69.9 | 88.9 | M16- 32 deep | 145 | 135 | 14 | 130 | 150 | 261.5 | 298.5 | 18 | 60 | 8 | 159 | 110 | 23.7 | 170.5 | 28 | 50 | 40 | 5 | 31 | 8 | 24.8 | 27.5 |
| **250/315** | 3″ | 106.4 | 61.9 | 76.2 | M16- 32 deep | 200 | 185 | 19 | 155 | 200 | 311.0 | 364.0 | 26 | 90 | 8 | 208 | 160 | 35.5 | 240.0 | 38 | 80 | 63 | 8 | 41 | 10 | 44.2 | 47.6 |
| **400/500** | 4″ | 130.2 | 77.8 | 101.6 | M16- 32 deep | 200 | 185 | 19 | 200 | 200 | 373.0 | 426.0 | 26 | 90 | 8 | 208 | 160 | 35.5 | 240.0 | 38 | 80 | 63 | 8 | 41 | 10 | 54.7 | 58.2 |
| **630** | 4″ | 130.2 | 77.8 | 101.6 | M16- 32 deep | 200 | 185 | 19 | 200 | 200 | 417.0 | 470.0 | 26 | 90 | 8 | 208 | 160 | 35.5 | 240.0 | 38 | 80 | 63 | 8 | 41 | 10 | 60.8 | 64.2 |

Dimensions in mm / Weights in kg

# Dimensions and weights

## Mounting angle for KF / KF-F 2.5 … 25

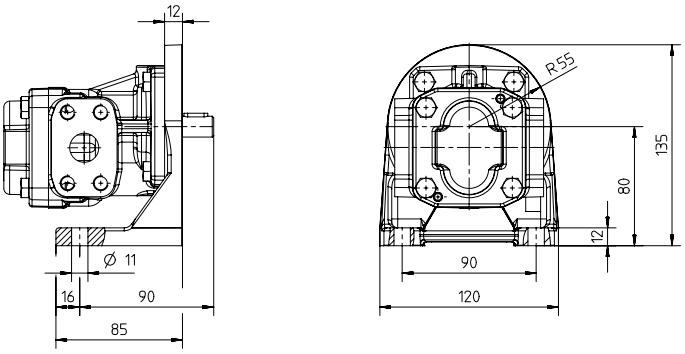


## Mounting angle for KF / KF-F 32 … 80

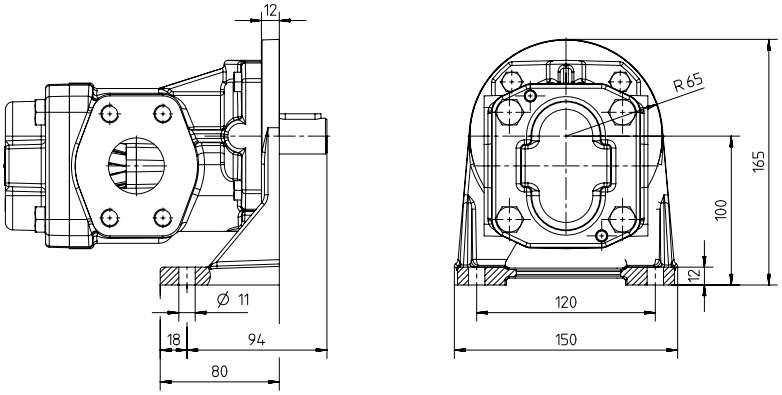


## Mounting angle for KF / KF-F 100 … 200

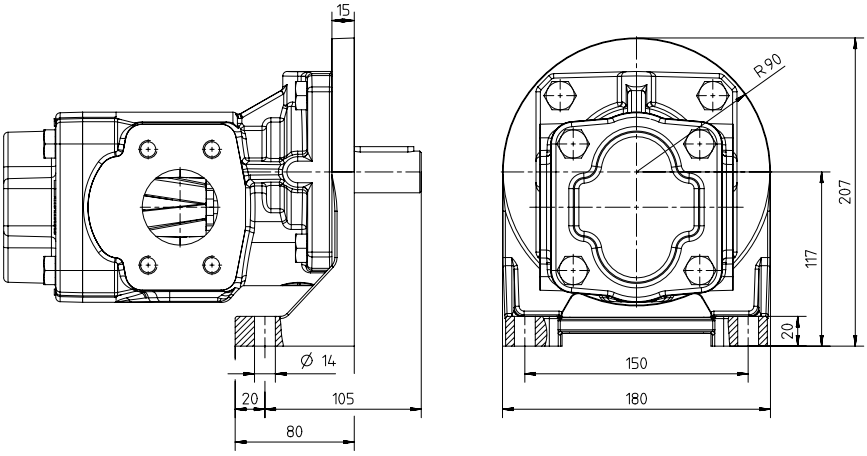


Dimensions in mm

## Dimensions and weights

### KF / KF-F 32 … 80 with universal valve (type code ID: U)

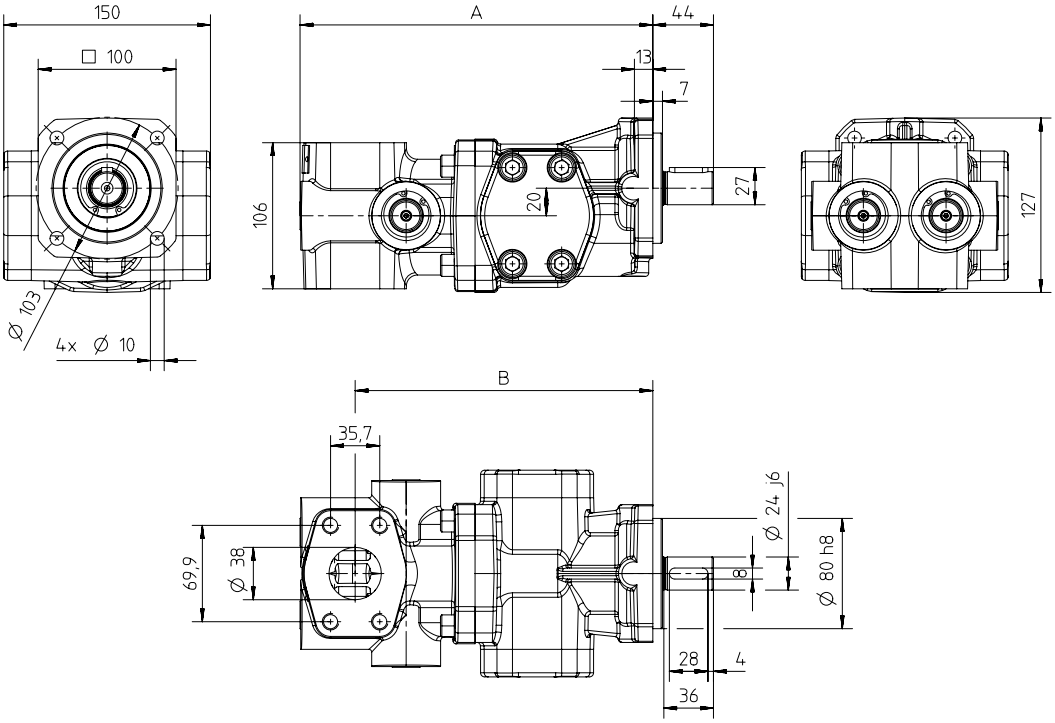


### KF / KF-F 100/112 with universal valve (type code ID: U)

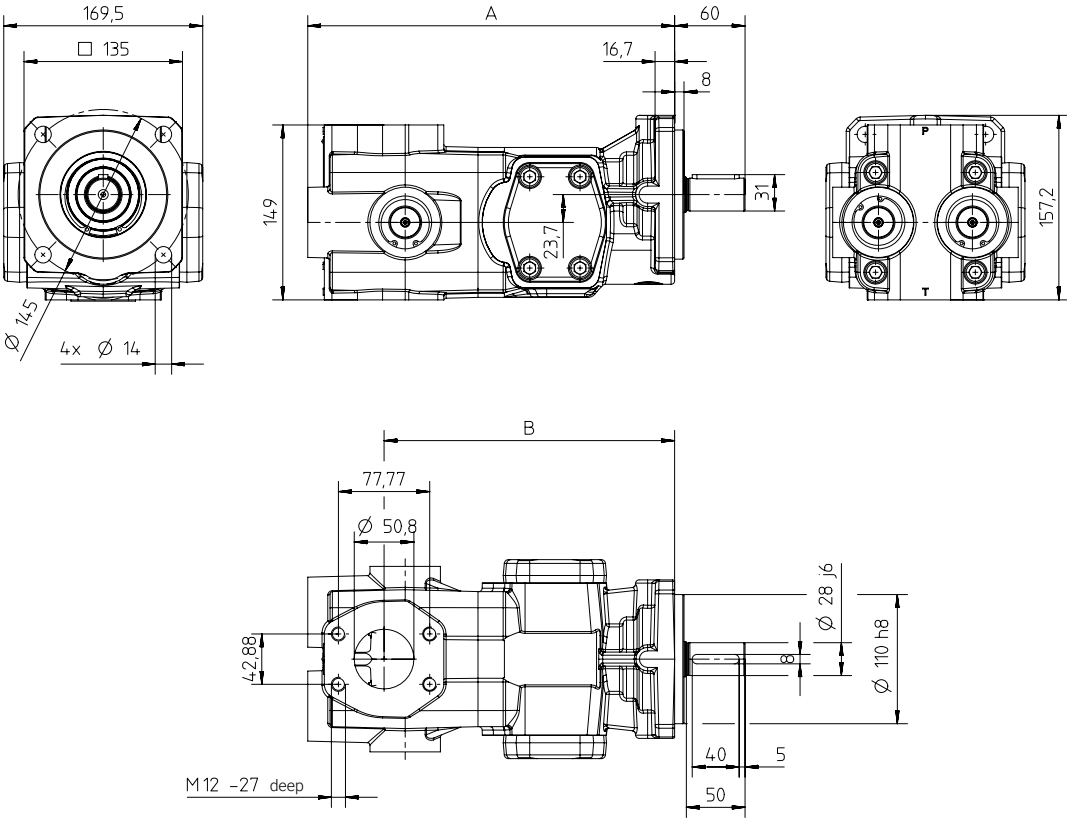


| Nominal size | A | B | Weight |
|---|---|---|---|
| **32 … 50** | 256.0 | 216.0 | 15.5 |
| **63 / 80** | 291.0 | 251.0 | 17.5 |
| **100 / 112** | 312.5 | 247.5 | 21.6 |

**Schematic diagram**

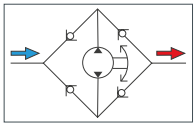

Dimensions in mm / Weights in kg

## Dimensions and weights

### KF / KF-F 32 … 80 with T-valve (type code ID: T)

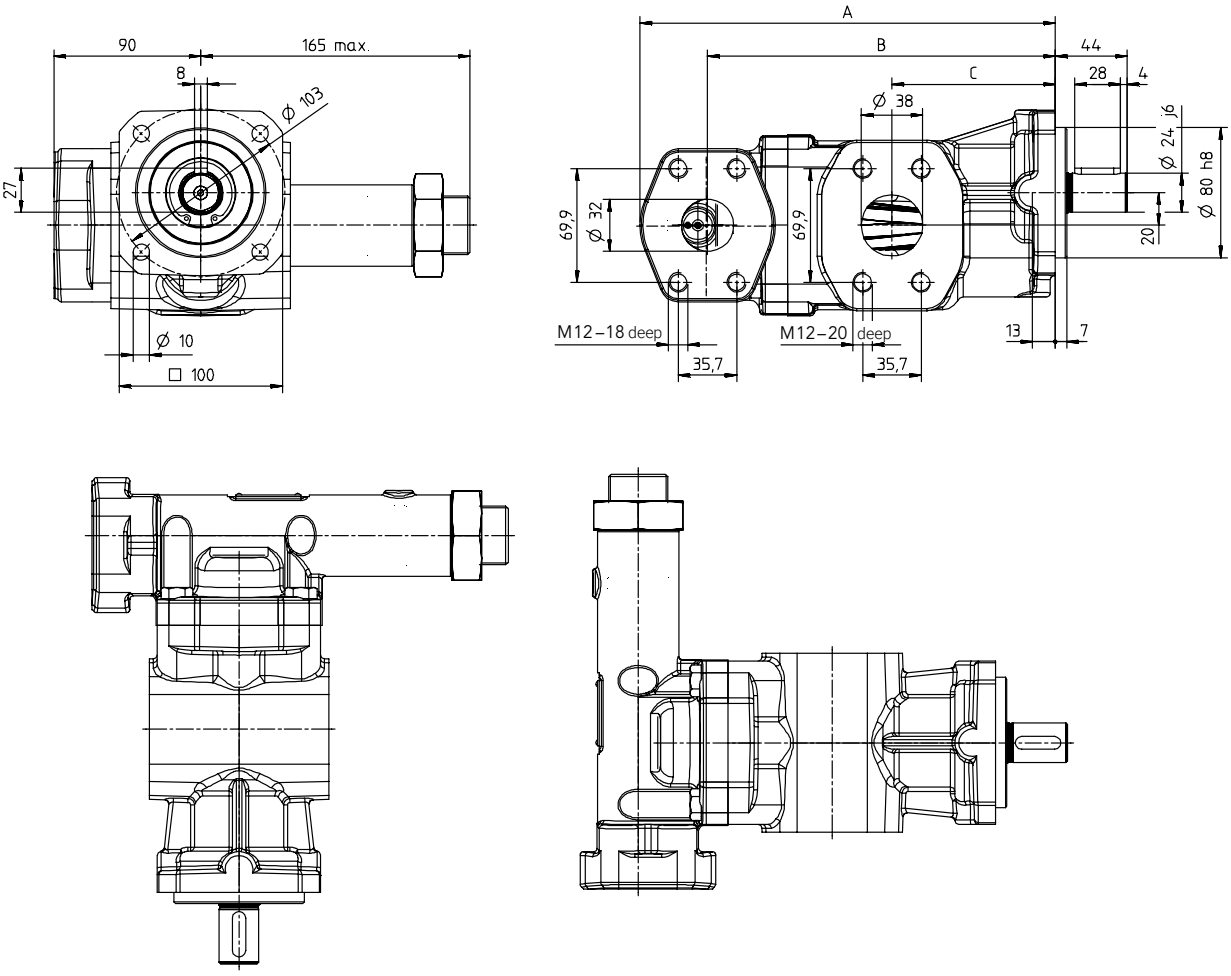


| Nominal size | A | B | C | Weight |
|---|---|---|---|---|
| **32 … 50** | 220 | 184 | 84 | 9.5 |
| **63 / 80** | 255 | 213 | 100 | 11.2 |

Dimensions in mm / Weights in kg

# Dimensions and weights

## KF 730 … 1500

### Version with housing cover

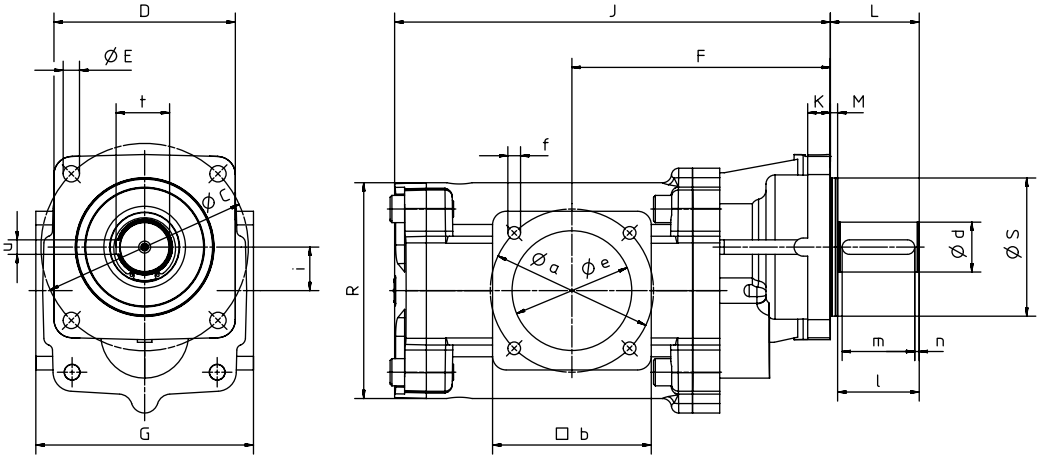


### Version with pressure relief valve (type code ID: B)

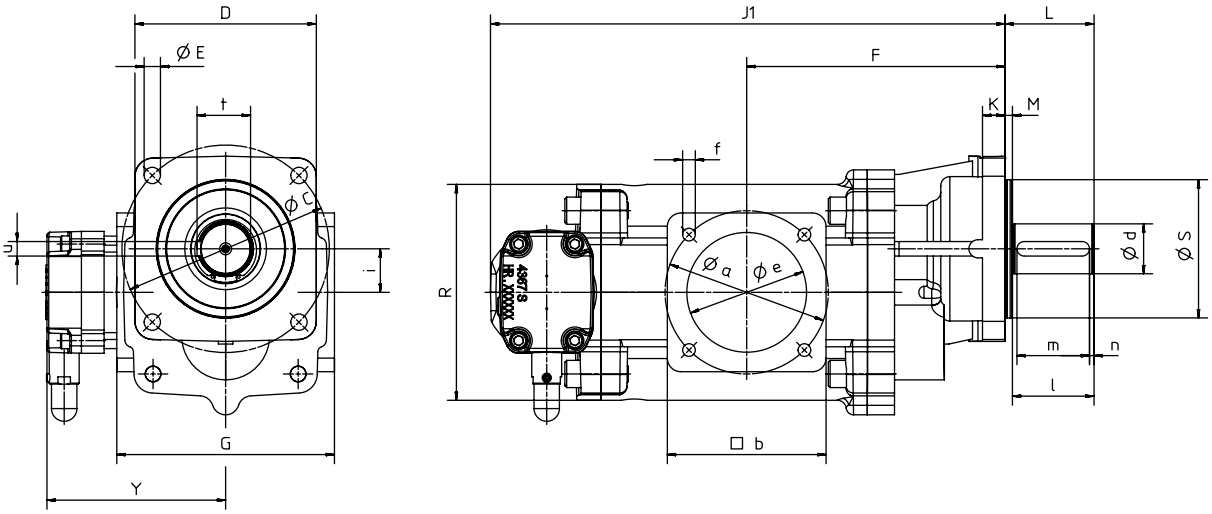


| Nominal size | DN | Suction and pressure connection | | | | Housing | | | | | | | | | | | | | | Shaft end | | | | | | Weight | |
|---|---|---|---|---|---|---|---|---|---|---|---|---|---|---|---|---|---|---|---|---|---|---|---|---|---|---|---|
| | | a | b | e | f | C | D | E | F | G | J | $J_1$ | K | L | M | R | $S_{h8}$ | i | Y | $d_{j6}$ | l | m | n | t | u | without valve | with valve |
| **730** | 132 | 180 | 175 | 132 | M16 - 30 deep | 228.7 | 200 | 18 | 285 | 240 | 415 | 502 | 25 | 98 | 8 | 238 | 152.4 | 48 | 197 | 55 | 90 | 80 | 5 | 59 | 16 | 90 | 99.5 |
| **1000** | 132 | 180 | 175 | 132 | M16 - 30 deep | 228.7 | 200 | 18 | 285 | 240 | 481 | 568 | 25 | 98 | 8 | 238 | 152.4 | 48 | 197 | 55 | 90 | 80 | 5 | 59 | 16 | 102 | 111.5 |
| **1250** | 160 | 210 | 205 | 160 | M16 - 30 deep | 228.7 | 200 | 18 | 330 | 270 | 559 | 646 | 25 | 98 | 8 | 238 | 152.4 | 48 | 197 | 55 | 90 | 80 | 5 | 59 | 16 | 124 | 133.5 |
| **1500** | 160 | 210 | 205 | 160 | M16 - 30 deep | 228.7 | 200 | 18 | 330 | 270 | 559 | 646 | 25 | 98 | 8 | 238 | 152.4 | 48 | 197 | 55 | 90 | 80 | 5 | 59 | 16 | 125 | 134.5 |

Dimensions in mm / Weights in kg

# Dimensions and weights

## KF 1800 … 3150

### Version with housing cover

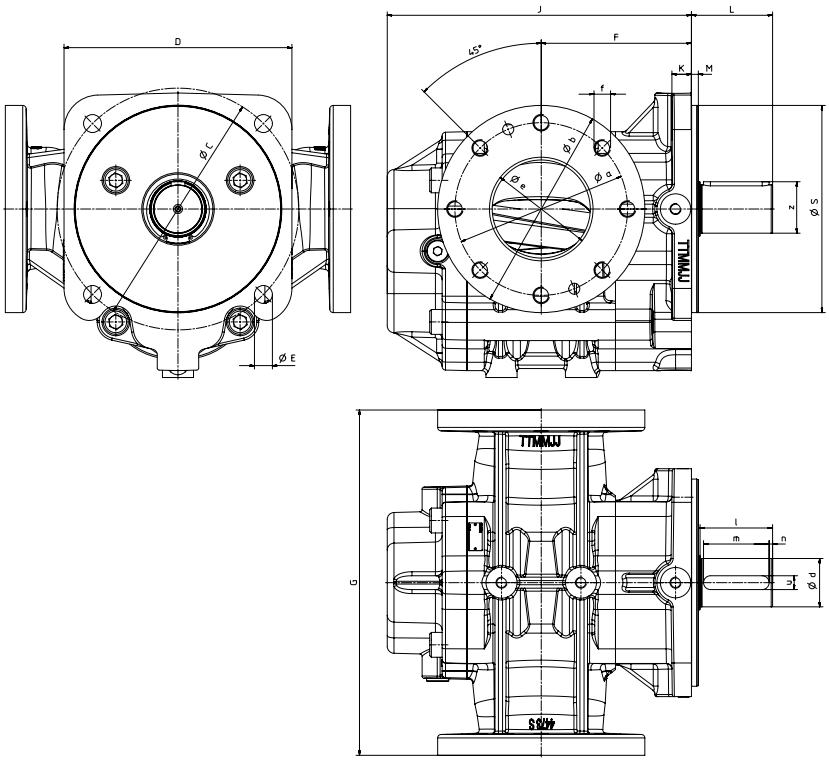

### Version with pressure relief valve (type code ID: B)

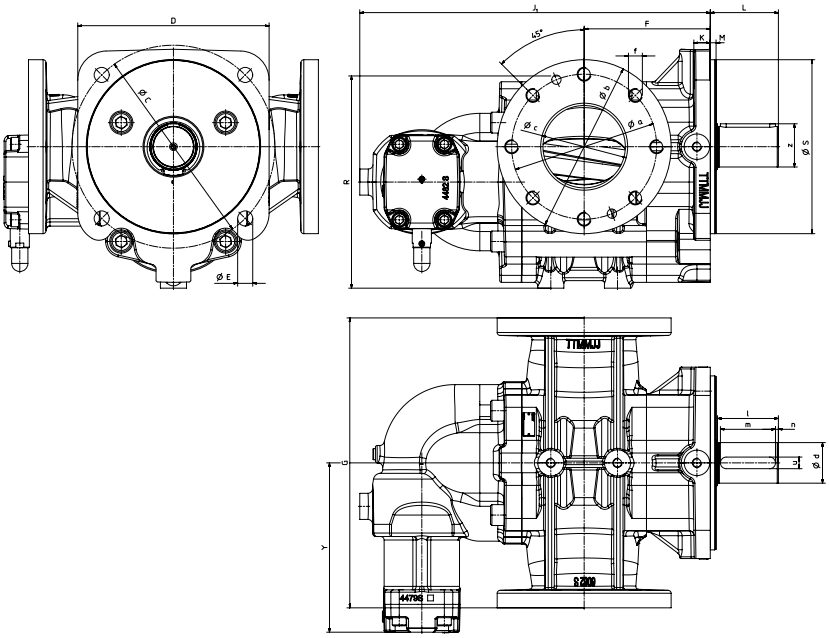

| Nominal size | DN | Suction and pressure connection | | | | Housing | | | | | | | | | | | | | Shaft end | | | | | | Weight | |
|---|---|---|---|---|---|---|---|---|---|---|---|---|---|---|---|---|---|---|---|---|---|---|---|---|---|---|
| | | a | b | e | f | C | D | E | F | G | J | $J_1$ | K | L | M | R | $S_{h7}$ | Y | $d_{h11}$ | l | m | n | z | u | without valve | with valve |
| **1800** | 150 | 250 | 300 | 150 | M24 | 350 | 330 | 26 | 217.5 | 500 | 440.5 | 604.5 | 28.3 | 117.5 | 10 | 366 | 300 | 292 | 70 | 105 | 95 | 5 | 74.5 | 20 | 211 | 239 |
| **2000** | 150 | 250 | 300 | 150 | M24 | 350 | 330 | 26 | 230.0 | 500 | 465.5 | 629.5 | 28.3 | 117.5 | 10 | 366 | 300 | 292 | 70 | 105 | 95 | 5 | 74.5 | 20 | 219 | 248 |
| **2500** | 200 | 310 | 360 | 200 | M24 | 350 | 330 | 26 | 257.5 | 500 | 520.5 | 684.5 | 28.3 | 117.5 | 10 | 366 | 300 | 292 | 70 | 105 | 95 | 5 | 74.5 | 20 | 243 | 271 |
| **3150** | 200 | 310 | 360 | 200 | M24 | 350 | 330 | 26 | 295.0 | 500 | 595.5 | 759.5 | 28.3 | 117.5 | 10 | 366 | 300 | 292 | 70 | 105 | 95 | 5 | 74.5 | 20 | 263 | 290 |

Dimensions in mm / Weights in kg

# Dimensions and weights

## KF / KF-F 2.5 … 630 – Motor-pump unit, SAE, IM B35

### Version with housing cover / SAE

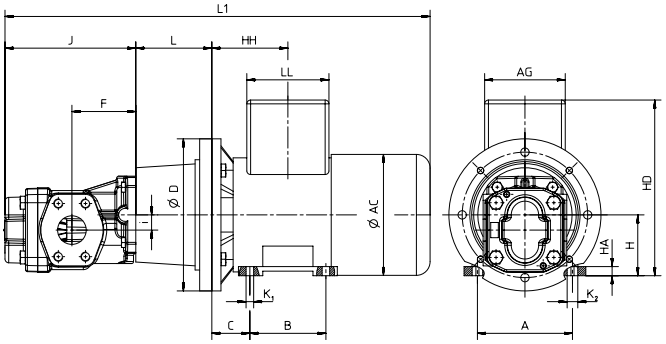


### Version with pressure relief valve / SAE

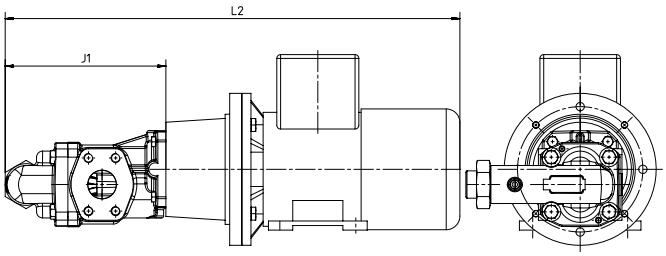


| IEC motor size | 2.5 … 12 | 16 … 25 | 2.5 … 12 | 16 … 25 | 2.5 … 25 | | | | | | | | | | | | | |
|---|---|---|---|---|---|---|---|---|---|---|---|---|---|---|---|---|---|---|
| | L1* | | L2* | | L | D | A | B | C | H | HD* | $K_1$ | $K_2$ | AC* | HA* | LL* | HH* | AG* |
| **71** | 408.0 | 430.0 | 440.0 | 462.0 | 80 | 160 | 112 | 90 | 45 | 71 | 201 | 7 | 10 | 147 | 9 | 108 | 90.0 | 101 |
| **80** | 499.0 | 521.0 | 531.0 | 553.0 | 100 | 200 | 125 | 100 | 50 | 80 | 231 | 10 | 14 | 159 | 12 | 108 | 100.0 | 106 |
| **90 S** | 505.0 | 527.0 | 537.0 | 559.0 | 100 | 200 | 140 | 100 | 56 | 90 | 251 | 10 | 14 | 179 | 13 | 115 | 106.0 | 109 |
| **90 L** | 545.0 | 567.0 | 577.0 | 599.0 | 100 | 200 | 140 | 125 | 56 | 90 | 251 | 10 | 14 | 179 | 13 | 115 | 118.5 | 109 |
| **100** | 650.5 | 672.5 | 682.5 | 704.5 | 120 | 250 | 160 | 140 | 63 | 100 | 293 | 12 | 16 | 199 | 16 | 134 | 133.0 | 163 |
| **112** | 640.0 | 662.0 | 672.0 | 694.0 | 120 | 250 | 190 | 140 | 70 | 112 | 308 | 12 | 16 | 222 | 15 | 140 | 140.0 | 163 |

| | 32 … 50 | 63 … 80 | 32 … 50 | 63 … 80 | 32 … 80 | | | | | | | | | | | | | |
|---|---|---|---|---|---|---|---|---|---|---|---|---|---|---|---|---|---|---|
| **80** | 563.0 | 598.0 | 602.5 | 637.5 | 100 | 200 | 125 | 100 | 50 | 80 | 231 | 10 | 14 | 159 | 12 | 108 | 100.0 | 106 |
| **90 S** | 579.0 | 614.0 | 618.5 | 653.5 | 110 | 200 | 140 | 100 | 56 | 90 | 251 | 10 | 14 | 179 | 13 | 115 | 106.0 | 109 |
| **90 L** | 619.0 | 654.0 | 658.5 | 693.5 | 110 | 200 | 140 | 125 | 56 | 90 | 251 | 10 | 14 | 179 | 13 | 115 | 118.5 | 109 |
| **100** | 718.5 | 753.5 | 758.0 | 793.0 | 124 | 250 | 160 | 140 | 63 | 100 | 293 | 12 | 16 | 199 | 16 | 134 | 133.0 | 163 |
| **112** | 708.0 | 743.0 | 747.5 | 782.5 | 124 | 250 | 190 | 140 | 70 | 112 | 308 | 12 | 16 | 222 | 15 | 140 | 140.0 | 163 |
| **132 S** | 752.5 | 787.5 | 792.0 | 827.0 | 144 | 300 | 216 | 140 | 89 | 132 | 350 | 12 | 16 | 271 | 20 | 140 | 159.0 | 163 |
| **132 M** | 752.5 | 787.5 | 792.0 | 827.0 | 144 | 300 | 216 | 178 | 89 | 132 | 350 | 12 | 16 | 271 | 20 | 140 | 178.0 | 163 |
| **160 M** | 916.0 | 951.0 | 955.5 | 990.5 | 188 | 350 | 254 | 210 | 108 | 160 | 437 | 15 | 19 | 329 | 22 | 198 | 213.0 | 190 |
| **160 L** | 938.0 | 973.0 | 977.5 | 1012.5 | 188 | 350 | 254 | 254 | 108 | 160 | 437 | 15 | 19 | 329 | 22 | 198 | 235.0 | 190 |

| | 100/112 | 125/150 | 180/200 | 100/112 | 125/150 | 180/200 | 100 … 200 | | | | | | | | | | | | | |
|---|---|---|---|---|---|---|---|---|---|---|---|---|---|---|---|---|---|---|---|---|
| **100** | 778.0 | 802.5 | 819.0 | 820.0 | 839.5 | 856.0 | 135 | 250 | 160 | 140 | 63 | 100 | 293 | 12 | 16 | 199 | 16 | 134 | 133.0 | 163 |
| **112** | 767.5 | 792.0 | 808.5 | 809.5 | 829.0 | 845.5 | 135 | 250 | 190 | 140 | 70 | 112 | 308 | 12 | 16 | 222 | 15 | 140 | 140.0 | 163 |
| **132 S** | 825.0 | 849.5 | 866.0 | 867.0 | 886.5 | 903.0 | 168 | 300 | 216 | 140 | 89 | 132 | 350 | 12 | 16 | 271 | 20 | 140 | 159.0 | 163 |
| **132 M** | 825.0 | 849.5 | 866.0 | 867.0 | 886.5 | 903.0 | 168 | 300 | 216 | 178 | 89 | 132 | 350 | 12 | 16 | 271 | 20 | 140 | 178.0 | 163 |
| **160 M** | 964.5 | 989.0 | 1005.5 | 1006.5 | 1026.0 | 1042.5 | 188 | 350 | 254 | 210 | 108 | 160 | 437 | 15 | 19 | 329 | 22 | 198 | 213.0 | 190 |
| **160 L** | 986.5 | 1011.0 | 1027.5 | 1028.5 | 1048.0 | 1064.5 | 188 | 350 | 254 | 254 | 108 | 160 | 437 | 15 | 19 | 329 | 22 | 198 | 235.0 | 190 |
| **180 M** | 1025.5 | 1050.0 | 1066.5 | 1067.5 | 1087.0 | 1103.5 | 204 | 350 | 279 | 241 | 121 | 180 | 477 | 15 | 19 | 360 | 28 | 198 | 241.5 | 190 |
| **180 L** | 1060.5 | 1085.0 | 1101.5 | 1102.5 | 1122.0 | 1138.5 | 204 | 350 | 279 | 279 | 121 | 180 | 477 | 15 | 19 | 360 | 28 | 198 | 261.0 | 210 |

| | 250/315 | 400/500 | 630 | 250/315 | 400/500 | 630 | 250 … 630 | | | | | | | | | | | | | |
|---|---|---|---|---|---|---|---|---|---|---|---|---|---|---|---|---|---|---|---|---|
| **132 S** | 943.5 | 1005.5 | 1049.5 | 996.5 | 1058.5 | 1102.5 | 196 | 300 | 216 | 140 | 89 | 132 | 350 | 12 | 16 | 271 | 20 | 140 | 159.0 | 163 |
| **132 M** | 943.5 | 1005.5 | 1049.5 | 996.5 | 1058.5 | 1102.5 | 196 | 300 | 216 | 178 | 89 | 132 | 350 | 12 | 16 | 271 | 20 | 140 | 178.0 | 163 |
| **160 M** | 1095.0 | 1157.0 | 1201.0 | 1148.0 | 1210.0 | 1254.0 | 228 | 350 | 254 | 210 | 108 | 160 | 437 | 15 | 19 | 329 | 22 | 198 | 213.0 | 190 |
| **160 L** | 1117.0 | 1179.0 | 1223.0 | 1170.0 | 1232.0 | 1276.0 | 228 | 350 | 254 | 254 | 108 | 160 | 437 | 15 | 19 | 329 | 22 | 198 | 235.0 | 190 |
| **180 M** | 1140.0 | 1202.0 | 1246.0 | 1193.0 | 1255.0 | 1299.0 | 228 | 350 | 279 | 241 | 121 | 180 | 477 | 15 | 19 | 360 | 28 | 198 | 241.5 | 190 |
| **180 L** | 1175.0 | 1237.0 | 1281.0 | 1228.0 | 1290.0 | 1334.0 | 228 | 350 | 279 | 279 | 121 | 180 | 477 | 15 | 19 | 360 | 28 | 198 | 261.0 | 210 |
| **200 L** | 1275.0 | 1337.0 | 1381.0 | 1328.0 | 1390.0 | 1434.0 | 228 | 400 | 318 | 305 | 133 | 200 | 521 | 19 | 25 | 402 | 30 | 228 | 285.0 | 266 |
| **225 S** | 1319.0 | 1381.0 | 1425.0 | 1372.0 | 1434.0 | 1478.0 | 262 | 450 | 356 | 286 | 149 | 225 | 609 | 19 | 25 | 465 | 34 | 261 | 283.0 | 292 |
| **225 M** | 1361.0 | 1423.0 | 1467.0 | 1414.0 | 1476.0 | 1520.0 | 262 | 450 | 356 | 311 | 149 | 225 | 609 | 19 | 25 | 465 | 34 | 261 | 295.0 | 292 |
| **250 M** | 1416.0 | 1478.0 | 1522.0 | 1469.0 | 1531.0 | 1575.0 | 265 | 550 | 406 | 349 | 168 | 250 | 660 | 24 | 30 | 506 | 43 | 261 | 342.0 | 319 |

### Pump dimensions

| Nominal size | F | J | J1 | i |
|---|---|---|---|---|
| **2.5 … 12** | 54.0 | 108.0 | 140.0 | 14.2 |
| **16 … 25** | 63.0 | 130.0 | 162.0 | 14.2 |
| **32 … 50** | 84.0 | 172.0 | 211.5 | 20.0 |
| **63 / 80** | 100.0 | 207.0 | 246.5 | 20.0 |
| **100 / 112** | 102.0 | 220.5 | 262.5 | 23.7 |
| **125 / 150** | 120.0 | 245.0 | 282.0 | 23.7 |
| **180 / 200** | 130.0 | 261.5 | 298.5 | 23.7 |
| **250 / 315** | 155.0 | 311.0 | 364.0 | 35.5 |
| **400 / 500** | 200.0 | 373.0 | 426.0 | 35.5 |
| **630** | 200.0 | 417.0 | 470.0 | 35.5 |

**Notes**

* Dimensions dependent on motor manufacturer.
- Pumps of nominal sizes 2.5 … 25 are also available with pipe thread connection.
- Motors that can be combined with KF pumps: air motors, geared motors, hydraulic motors (for details, see data sheet KM), IEC electric motors in all common efficiency classes (up to IE4), motors in Atex/IECEx design, motors with marine approval, NEMA motors
- The motor dimensions refer to DIN 42673/677.
- All listed nominal pump sizes and motor sizes can be combined with each other.

Dimensions in mm / Weights in kg

# Dimensions and weights

## KF / KF-F 2.5 … 630 – Motor-pump unit, SAE, foot flange L, IM B5

**Version with housing cover / SAE**
**Foot flange L (light version)**

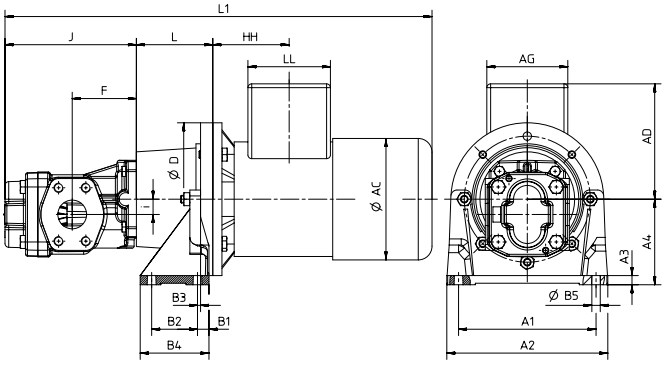


**Version with pressure relief valve / SAE**
**Foot flange L (light version)**

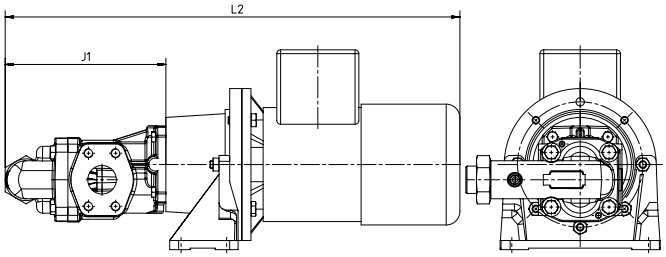


| IEC motor size | 2.5 … 12 | 16 … 25 | 2.5 … 12 | 16 … 25 | 2.5 … 25 | | | | | | | | | | | | | | |
|---|---|---|---|---|---|---|---|---|---|---|---|---|---|---|---|---|---|---|---|
| | L1* | | L2* | | L | D | A1 | A2 | A3 | A4 | B1 | B2 | B3 | B4 | B5 | AD* | HH* | LL* | AG* | AC* |
| **71** | 408.0 | 430.0 | 440.0 | 462.0 | 80 | 160 | 140 | 160 | 10 | 100 | 15 | 50 | 7 | 80 | 9 | 130 | 90.0 | 108 | 101 | 147 |
| **80** | 499.0 | 521.0 | 531.0 | 553.0 | 100 | 200 | 180 | 210 | 12 | 112 | 15 | 60 | 4 | 90 | 11 | 151 | 100.0 | 108 | 106 | 159 |
| **90 S** | 505.0 | 527.0 | 537.0 | 559.0 | 100 | 200 | 180 | 210 | 12 | 112 | 15 | 60 | 4 | 90 | 11 | 161 | 106.0 | 115 | 109 | 179 |
| **90 L** | 545.0 | 567.0 | 577.0 | 599.0 | 100 | 200 | 180 | 210 | 12 | 112 | 15 | 60 | 4 | 90 | 11 | 161 | 118.5 | 115 | 109 | 179 |
| **100** | 650.5 | 672.5 | 682.5 | 704.5 | 120 | 250 | 220 | 250 | 15 | 132 | 21 | 60 | - | 97 | 13 | 193 | 133.0 | 134 | 163 | 199 |
| **112** | 640.0 | 662.0 | 672.0 | 694.0 | 120 | 250 | 220 | 250 | 15 | 132 | 21 | 60 | - | 97 | 13 | 196 | 140.0 | 140 | 163 | 222 |

| | 32 … 50 | 63 … 80 | 32 … 50 | 63 … 80 | 32 … 80 | | | | | | | | | | | | | | |
|---|---|---|---|---|---|---|---|---|---|---|---|---|---|---|---|---|---|---|---|
| **80** | 563.0 | 598.0 | 602.5 | 637.5 | 100 | 200 | 180 | 210 | 12 | 112 | 15 | 60 | 4 | 90 | 11 | 151 | 100.0 | 108 | 106 | 159 |
| **90 S** | 579.0 | 614.0 | 618.5 | 653.5 | 110 | 200 | 180 | 210 | 12 | 112 | 15 | 60 | 4 | 90 | 11 | 161 | 106.0 | 115 | 109 | 179 |
| **90 L** | 619.0 | 654.0 | 658.5 | 693.5 | 110 | 200 | 180 | 210 | 12 | 112 | 15 | 60 | 4 | 90 | 11 | 161 | 118.5 | 115 | 109 | 179 |
| **100** | 718.5 | 753.5 | 758.0 | 793.0 | 124 | 250 | 220 | 250 | 15 | 132 | 21 | 60 | - | 97 | 13 | 193 | 133.0 | 134 | 163 | 199 |
| **112** | 708.0 | 743.0 | 747.5 | 782.5 | 124 | 250 | 220 | 250 | 15 | 132 | 21 | 60 | - | 97 | 13 | 196 | 140.0 | 140 | 163 | 222 |
| **132 S** | 752.5 | 787.5 | 792.0 | 827.0 | 144 | 300 | 260 | 290 | 18 | 160 | 20 | 80 | - | 116 | 13 | 218 | 159.0 | 140 | 163 | 271 |
| **132 M** | 752.5 | 787.5 | 792.0 | 827.0 | 144 | 300 | 260 | 290 | 18 | 160 | 20 | 80 | - | 116 | 13 | 218 | 178.0 | 140 | 163 | 271 |
| **160 M** | 916.0 | 951.0 | 955.5 | 990.5 | 188 | 350 | 300 | 340 | 22 | 180 | 20 | 110 | - | 150 | 16 | 277 | 213.0 | 198 | 190 | 329 |
| **160 L** | 938.0 | 973.0 | 977.5 | 1012.5 | 188 | 350 | 300 | 340 | 22 | 180 | 20 | 110 | - | 150 | 16 | 277 | 235.0 | 198 | 190 | 329 |

| | 100/112 | 125/150 | 180/200 | 100/112 | 125/150 | 180/200 | 100 … 200 | | | | | | | | | | | | | | | |
|---|---|---|---|---|---|---|---|---|---|---|---|---|---|---|---|---|---|---|---|---|---|---|
| **100** | 778.0 | 802.5 | 819.0 | 820.0 | 839.5 | 856.0 | 135 | 250 | 220 | 250 | 15 | 132 | 21 | 60 | - | 97 | 13 | 193 | 133.0 | 134 | 163 | 199 |
| **112** | 767.5 | 792.0 | 808.5 | 809.5 | 829.0 | 845.5 | 135 | 250 | 220 | 250 | 15 | 132 | 21 | 60 | - | 97 | 13 | 196 | 140.0 | 140 | 163 | 222 |
| **132 S** | 825.0 | 849.5 | 866.0 | 867.0 | 886.5 | 903.0 | 168 | 300 | 260 | 290 | 18 | 160 | 20 | 80 | - | 116 | 13 | 218 | 159.0 | 140 | 163 | 271 |
| **132 M** | 825.0 | 849.5 | 866.0 | 867.0 | 886.5 | 903.0 | 168 | 300 | 260 | 290 | 18 | 160 | 20 | 80 | - | 116 | 13 | 218 | 178.0 | 140 | 163 | 271 |
| **160 M** | 964.5 | 989.0 | 1005.5 | 1006.5 | 1026.0 | 1042.5 | 188 | 350 | 300 | 340 | 22 | 180 | 20 | 110 | - | 150 | 16 | 277 | 213.0 | 198 | 190 | 329 |
| **160 L** | 986.5 | 1011.0 | 1027.5 | 1028.5 | 1048.0 | 1064.5 | 188 | 350 | 300 | 340 | 22 | 180 | 20 | 110 | - | 150 | 16 | 277 | 235.0 | 198 | 190 | 329 |
| **180 M** | 1025.5 | 1050.0 | 1066.5 | 1067.5 | 1087.0 | 1103.5 | 204 | 350 | 300 | 340 | 22 | 180 | 20 | 110 | - | 150 | 16 | 297 | 241.5 | 198 | 190 | 360 |
| **180 L** | 1060.5 | 1085.0 | 1101.5 | 1102.5 | 1122.0 | 1138.5 | 204 | 350 | 300 | 340 | 22 | 180 | 20 | 110 | - | 150 | 16 | 297 | 261.0 | 198 | 210 | 360 |

| | 250/315 | 400/500 | 630 | 250/315 | 400/500 | 630 | 250 … 630 | | | | | | | | | | | | | | | | |
|---|---|---|---|---|---|---|---|---|---|---|---|---|---|---|---|---|---|---|---|---|---|---|---|
| | L1* | | | L2* | | | L | D | A1 | A2 | A3 | A4 | B1 | B2 | B3 | B4 | B5 | B6 | AD* | HH* | LL* | AG* | AC* |
| **132 S** | 943.5 | 1005.5 | 1049.5 | 996.5 | 1058.5 | 1102.5 | 196 | 300 | 265 | 300 | 19 | 185 | 75 | 225 | 92 | 270 | 14 | 10 | 218 | 159 | 140 | 163 | 271 |
| **132 M** | 943.5 | 1005.5 | 1049.5 | 996.5 | 1058.5 | 1102.5 | 196 | 300 | 265 | 300 | 19 | 185 | 75 | 225 | 92 | 270 | 14 | 10 | 218 | 178 | 140 | 163 | 271 |
| **160 M** | 1095.0 | 1157.0 | 1201.0 | 1148.0 | 1210.0 | 1254.0 | 228 | 350 | 300 | 350 | 18 | 235 | 90 | 265 | 110 | 305 | 18 | 12 | 277 | 213 | 198 | 190 | 329 |

### Pump dimensions

| Nominal size | F | J | J1 | i |
|---|---|---|---|---|
| **2.5 … 12** | 54.0 | 108.0 | 140.0 | 14.2 |
| **16 … 25** | 63.0 | 130.0 | 162.0 | 14.2 |
| **32 … 50** | 84.0 | 172.0 | 211.5 | 20.0 |
| **63 / 80** | 100.0 | 207.0 | 246.5 | 20.0 |
| **100 / 112** | 102.0 | 220.5 | 262.5 | 23.7 |
| **125 / 150** | 120.0 | 245.0 | 282.0 | 23.7 |
| **180 / 200** | 130.0 | 261.5 | 298.5 | 23.7 |
| **250 / 315** | 155.0 | 311.0 | 364.0 | 35.5 |
| **400 / 500** | 200.0 | 373.0 | 426.0 | 35.5 |
| **630** | 200.0 | 417.0 | 470.0 | 35.5 |

**Notes**

* Dimensions dependent on motor manufacturer.
- Pumps of nominal sizes 2.5 … 25 are also available with pipe thread connection.
- Motors that can be combined with KF pumps: air motors, geared motors, hydraulic motors (for details, see data sheet KM), IEC electric motors in all common efficiency classes (up to IE4), motors in Atex/IECEx design, motors with marine approval, NEMA motors
- The motor dimensions refer to DIN 42673/677.
- All listed nominal pump sizes and motor sizes can be combined with each other.

Dimensions in mm / Weights in kg

# Dimensions and weights

## KF / KF-F 250 … 630 – Motor-pump unit, SAE, foot flange S, IM B5

**Version with housing cover**
**Foot flange S (heavy version)**

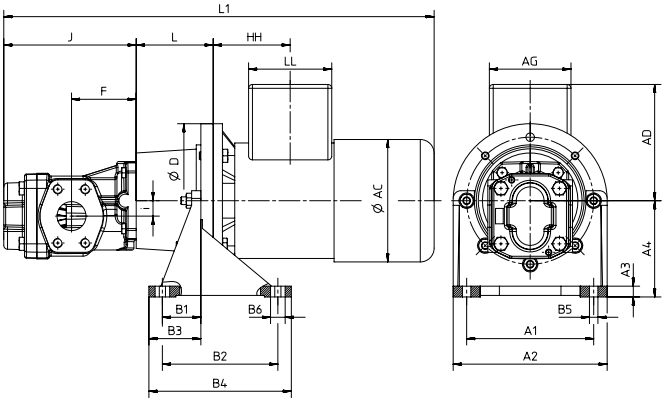


**Version with pressure relief valve**
**Foot flange S (heavy version)**

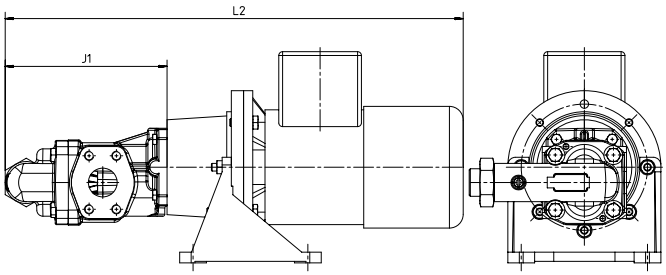


| IEC motor size | 250/315 | 400/500 | 630 | 250/315 | 400/500 | 630 | 250 … 630 | | | | | | | | | | | | | | | | |
|---|---|---|---|---|---|---|---|---|---|---|---|---|---|---|---|---|---|---|---|---|---|---|---|
| | L1* | | | L2* | | | L | D | A1 | A2 | A3 | A4 | B1 | B2 | B3 | B4 | B5 | B6 | AD* | HH* | LL* | AG* | AC* |
| **160 L** | 1117 | 1179 | 1223 | 1170 | 1232 | 1276 | 228 | 350 | 300 | 350 | 18 | 235 | 90 | 265 | 110 | 305 | 18 | 12 | 277 | 235.0 | 198 | 190 | 329 |
| **180 M** | 1140 | 1202 | 1246 | 1193 | 1255 | 1299 | 228 | 350 | 300 | 350 | 18 | 235 | 90 | 265 | 110 | 305 | 18 | 12 | 297 | 241.5 | 198 | 190 | 360 |
| **180 L** | 1175 | 1237 | 1281 | 1228 | 1290 | 1334 | 228 | 350 | 300 | 350 | 18 | 235 | 90 | 265 | 110 | 305 | 18 | 12 | 297 | 261.0 | 198 | 210 | 360 |
| **200 L** | 1275 | 1337 | 1381 | 1328 | 1390 | 1434 | 228 | 400 | 350 | 400 | 20 | 260 | 100 | 300 | 125 | 350 | 18 | 12 | 321 | 285.0 | 228 | 266 | 402 |
| **225 S** | 1319 | 1381 | 1425 | 1372 | 1434 | 1478 | 262 | 450 | 400 | 450 | 20 | 295 | 110 | 335 | 138 | 385 | 18 | 12 | 384 | 283.0 | 261 | 292 | 465 |
| **225 M** | 1361 | 1423 | 1467 | 1414 | 1476 | 1520 | 262 | 450 | 400 | 450 | 20 | 295 | 110 | 335 | 138 | 385 | 18 | 12 | 384 | 295.0 | 261 | 292 | 465 |
| **250 M** | 1416 | 1478 | 1522 | 1469 | 1531 | 1575 | 265 | 550 | 500 | 550 | 25 | 350 | 140 | 415 | 165 | 465 | 18 | 12 | 410 | 342.0 | 261 | 319 | 506 |

### Pump dimensions

| Nominal size | F | J | J1 | i |
|---|---|---|---|---|
| **250 / 315** | 155.0 | 311.0 | 364.0 | 35.5 |
| **400 / 500** | 200.0 | 373.0 | 426.0 | 35.5 |
| **630** | 200.0 | 417.0 | 470.0 | 35.5 |

**Notes**

* Dimensions dependent on motor manufacturer.
- Motors that can be combined with KF pumps: air motors, geared motors, hydraulic motors (for details, see data sheet KM), IEC electric motors in all common efficiency classes (up to IE4), motors in Atex/IECEx design, motors with marine approval, NEMA motors
- The motor dimensions refer to DIN 42673/677.
- All listed nominal pump sizes and motor sizes can be combined with each other.

Dimensions in mm / Weights in kg

# Dimensions and weights

## KF 730 … 3150 – Motor-pump unit, SAE D-4-hole-flange

### Version with housing cover

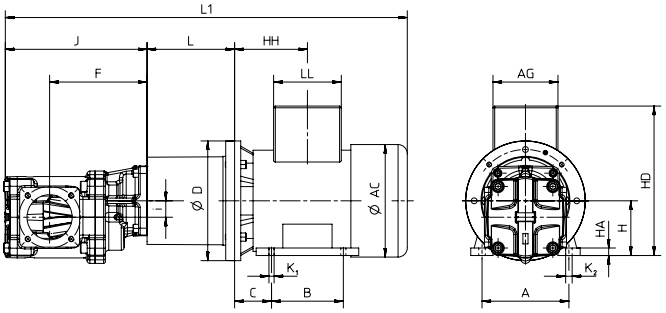


### Version with pressure relief valve

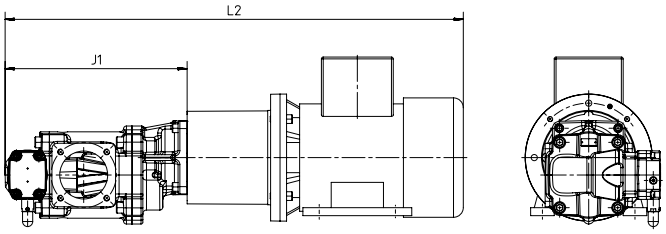


| IEC motor size | 730 | 1000 | 1250 1500 | 1800 | 2000 | 2500 | 3150 | 730 | 1000 | 1250 1500 | 1800 | 2000 | 2500 | 3150 | | | | | | | | | | |
|---|---|---|---|---|---|---|---|---|---|---|---|---|---|---|---|---|---|---|---|---|---|---|---|---|
| | L1* | | | | | | | L2* | | | | | | | L | D | A | AC* | B | H | HA | HD* | HH* | $K_1$ | C |
| **160 M** | 1166 | 1232 | 1310 | - | - | - | - | 1253 | 1319 | 1397 | - | - | - | - | 256 | 350 | 254 | 325 | 210 | 160 | 17 | 410 | 172.0 | 15 | 108 |
| **160 L** | 1211 | 1277 | 1355 | - | - | - | - | 1298 | 1364 | 1442 | - | - | - | - | 256 | 350 | 254 | 325 | 254 | 160 | 17 | 410 | 172.0 | 15 | 108 |
| **180 M** | 1248 | 1314 | 1392 | - | - | - | - | 1335 | 1401 | 1479 | - | - | - | - | 256 | 350 | 279 | 360 | 241 | 180 | 27 | 450 | 241.0 | 15 | 121 |
| **180 L** | 1286 | 1352 | 1430 | - | - | - | - | 1373 | 1439 | 1517 | - | - | - | - | 256 | 350 | 279 | 360 | 279 | 180 | 27 | 450 | 261.0 | 15 | 121 |
| **200 M/L** | 1301 | 1367 | 1445 | - | - | - | - | 1388 | 1454 | 1532 | - | - | - | - | 228 | 400 | 318 | 399 | 305 | 200 | 25 | 500 | 285.0 | 19 | 133 |
| **225 S** | 1351 | 1417 | 1495 | - | - | - | - | 1438 | 1504 | 1582 | - | - | - | - | 262 | 450 | 356 | 465 | 286 | 225 | 28 | 560 | 283.0 | 19 | 149 |
| **225 M** | 1376 | 1442 | 1520 | - | - | - | - | 1463 | 1529 | 1607 | - | - | - | - | 262 | 450 | 356 | 465 | 311 | 225 | 28 | 560 | 295.0 | 19 | 149 |
| **250 M** | 1458 | 1524 | 1602 | 1534 | 1559 | 1614 | 1689 | 1545 | 1611 | 1689 | 1698 | 1723 | 1778 | 1853 | 265 | 550 | 406 | 506 | 349 | 250 | 30 | 616 | 342.0 | 24 | 168 |
| **280 S** | 1534 | 1600 | 1678 | 1600 | 1625 | 1680 | 1755 | 1621 | 1687 | 1765 | 1764 | 1789 | 1844 | 1919 | 275 | 550 | 457 | 559 | 368 | 280 | 34 | 673 | 374.0 | 24 | 190 |
| **280 M** | 1585 | 1651 | 1729 | 1651 | 1676 | 1731 | 1806 | 1672 | 1738 | 1816 | 1815 | 1840 | 1895 | 1970 | 275 | 550 | 457 | 559 | 419 | 280 | 34 | 690 | 399.5 | 24 | 190 |
| **315 S** | 1940 | 2006 | 2084 | 1966 | 1991 | 2046 | 2121 | 2027 | 2093 | 2171 | 2130 | 2155 | 2210 | 2285 | 310 | 660 | 508 | 682 | 508 | 315 | 45 | 825 | 345.0 | 28 | 216 |
| **315 M/L** | 1790 | 1856 | 1934 | 1816 | 1841 | 1896 | 1971 | 1877 | 1943 | 2021 | 1980 | 2005 | 2060 | 2135 | 310 | 660 | 508 | 682 | 406 | 315 | 45 | 825 | 345.0 | 28 | 216 |

### Pump dimensions

| Nominal size | F | J | J1 | i |
|---|---|---|---|---|
| **730** | 285.0 | 415.0 | 502.0 | 48.0 |
| **1000** | 285.0 | 481.0 | 568.0 | |
| **1250** | 330.0 | 559.0 | 646.0 | |
| **1500** | 330.0 | 559.0 | 646.0 | |
| **1800** | 217.5 | 440.5 | 604.5 | |
| **2000** | 230.0 | 465.5 | 629.5 | |
| **2500** | 257.5 | 520.5 | 684.5 | |
| **3150** | 295.0 | 595.5 | 759.5 | |

**Notes**

* Dimensions dependent on motor manufacturer.

- Motors that can be combined with KF pumps: air motors, geared motors, hydraulic motors (for details, see data sheet KM), IEC electric motors in all common efficiency classes (up to IE4), motors in Atex/IECEx design, motors with marine approval, NEMA motors
- The motor dimensions refer to DIN 42673/677.
- All listed nominal pump sizes and motor sizes can be combined with each other.

### Weights

| Size | Total weight (pump, motor, bellhousing and coupling) | | | |
|---|---|---|---|---|
| | 730 | 1000 | 1250 | 1500 |
| **160 M** | 260.8 | 272.8 | 294.8 | 295.8 |
| **160 L** | 266.4 | 278.4 | 300.4 | 301.4 |
| **180 M** | 286.9 | 298.9 | 320.9 | 321.9 |
| **180 L** | 311.5 | 323.5 | 345.5 | 346.5 |
| **200 M** | 385.9 | 397.9 | 419.9 | 420.9 |
| **200 L** | 415.4 | 427.4 | 449.4 | 450.4 |
| **225 S** | 460.3 | 472.3 | 494.3 | 495.3 |
| **225 M** | 517.4 | 529.4 | 551.4 | 552.4 |
| **250 M** | 613.5 | 625.5 | 647.5 | 648.5 |
| **280 S** | 809.0 | 821.0 | 843.0 | 844.0 |
| **280 M** | 865.0 | 877.0 | 899.0 | 900.0 |
| **315 S** | 1212.7 | 1224.7 | 1246.7 | 1247.7 |
| **315 M** | - | 1359.1 | 1381.1 | 1382.1 |
| **315 L** | - | 1448.7 | 1470.7 | 1471.7 |

Dimensions in mm / Weights in kg

# Technical data

## Standard motors for KF 2.5 … 3150 / KF-F 2.5 … 630

| | IEC motor size | Performance at 400 V / 50 Hz in kW | | | Foot flange |
|---|---|---|---|---|---|
| | | Motor 4-pole | Motor 6-pole | Motor 8-pole | |
| KF / KF-F 2.5 … 630 | **71 M** | 0.25 | 0.18 | 0.09 | PTFL 160 |
| | **71 M** | 0.37 | 0.25 | 0.12 | PTFL 160 |
| | **80 M** | 0.55 | 0.37 | 0.18 | PTFL 200 |
| | **80 M** | 0.75 | 0.55 | 0.25 | PTFL 200 |
| | **90 S** | 1.10 | 0.75 | 0.37 | PTFL 200 |
| | **90 L** | 1.50 | 1.10 | 0.55 | PTFL 200 |
| | **100 L** | 2.20 | - | 0.75 | PTFL 250 |
| | **100 L** | 3.00 | 1.50 | 1.10 | PTFL 250 |
| | **112 M** | 4.00 | 2.20 | 1.50 | PTFL 250 |
| | **132 S** | 5.50 | 3.00 | 2.20 | PTFL 300 |
| | **132 M** | 7.50 | 4.00 | 3.00 | PTFL 300 |
| | **132 M** | - | 5.50 | - | PTFL 300 |
| KF 730 … 3150 | **160 M** | 11.00 | 7.50 | 4.00 | PTFL 350 |
| | **160 L** | 15.00 | 11.00 | 5.50 | PTFS 350 |
| | **180 M** | 18.50 | - | - | PTFS 350 |
| | **180 L** | 22.00 | 15.00 | 11.00 | PTFS 350 |
| | **200 L** | 30.00 | 18.50 | - | PTFS 400 |
| | **200 L** | - | 22.00 | 15.00 | PTFS 400 |
| | **225 S** | 37.00 | - | 18.50 | PTFS 450 |
| | **225 M** | 45.00 | 30.00 | 22.00 | PTFS 450 |
| | **250 M** | 55.00 | 37.00 | 30.00 | PTFS 550 |
| | **280 S** | 75.00 | 45.00 | - | On request |
| | **280 M** | 90.00 | 55.00 | - | |
| | **315 S** | 110.00 | 75.00 | - | |
| | **315 M** | 132.00 | 90.00 | - | |
| | **315 L** | 160.00 | 110.00 | - | |

# Technical data

## KF / KF-F 2.5 … 630 with magnetic coupling

| Pump | IEC motor size | Performance in kW at | | | | Coupling size |
|---|---|---|---|---|---|---|
| | | 750 1/min | 1000 1/min | 1500 1/min | 3000 1/min | |
| 2.5 … 25 | **63** | - | - | 0.12 / 0.18 | 0.25 | MSA 46 |
| | **71** | 0.12 | 0.18 | 0.25 | 0.37 / 0.55 | |
| | **71** | - | 0.25 | 0.37 | - | MSA 60 |
| | **80** | 0.18 / 0.25 | 0.37 | 0.55 | 0.75 / 1.10 | |
| | **80** | - | 0.55 | 0.75 | - | MSB 60 |
| | **90** | 0.37 / 0.55 | 0.75 | 1.10 | 1.50 / 2.20 | |
| | **90** | - | 1.10 | 1.50 | - | MSB 75 |
| | **100** | 0.75 / 1.10 | 1.50 | 2.20 | 3.00 | |
| | **112** | - | - | - | 4.00 | |
| | **100** | - | - | 3.00 | - | MSC 75 |
| | **112** | 1.50 | 2.20 | 4.00 | - | |
| | **132** | 2.20 | 3.00 | - | 5.50 / 7.50 | |
| 32 … 112 | **80** | - | 0.55 | 0.75 | - | MSB 60 |
| | **90** | 0.37 / 0.55 | 0.75 | 1.10 | 1.50 / 2.20 | |
| | **90** | - | 1.10 | 1.50 | - | MSB 75 |
| | **100** | 0.75 / 1.10 | 1.50 | 2.20 | 3.00 | |
| | **112** | - | - | - | 4.00 | |
| | **100** | - | - | 3.00 | - | MSC 75 |
| | **112** | 1.50 | 2.20 | 4.00 | - | |
| | **132** | 2.20 | 3.00 | - | 5.50 / 7.50 | |
| | **132** | 3.00 | 4.00 | 5.50 | - | MSB 110 |
| | **160** | - | - | - | 11.00 | |
| | **132** | - | 5.50 | 7.50 | - | MSC 110 |
| | **160** | 4.00 / 5.50 | 7.50 | 11.00 | 15.00 / 18.50 | |
| 100 … 200 | **100** | - | - | 3.00 | - | MSC 75 |
| | **112** | 1.50 | 2.20 | 4.00 | - | |
| | **132** | 2.20 | 3.00 | - | 5.50 / 7.50 | |
| | **132** | 3.00 | 4.00 | 5.50 | - | MSB 110 |
| | **160** | - | - | - | 11.00 | |
| | **132** | - | 5.50 | 7.50 | - | MSC 110 |
| | **160** | 4.00 / 5.50 | 7.50 | 11.00 | 15.00 / 18.50 | |
| | **180** | - | - | - | 22.00 | |
| | **160** | 7.50 | 11.0 | 15.00 | - | MSC 135 |
| | **180** | - | - | 18.50 | - | |
| | **200** | - | - | - | 30.00 / 37.00 | |
| | **180** | 11.0 | 15.00 | 22.00 | - | MSD 135 |
| | **225** | - | - | - | 45.00 | |
| | **200** | 15.00 | 18.50 / 22.00 | 30.00 | - | MSD 165 |
| 250 … 315 | **132** | 3.00 | 4.00 | 5.50 | - | SB 110 |
| | **160** | - | - | - | 11.00 | |
| | **132** | - | 5.50 | 7.50 | - | SC 110 |
| | **160** | 4.00 / 5.50 | 7.50 | 11.00 | 15.00 / 18.50 | |
| | **180** | - | - | - | 22.00 | |
| | **160** | 7.50 | - | 15.00 | - | SC 135 |
| | **180** | - | - | 18.50 | - | |
| | **200** | - | - | - | 30.00 / 37.00 | |
| | **180** | 11.00 | 15.00 | 22.00 | - | SD 135 |
| | **225** | - | - | - | 45.00 | |
| | **200** | 15.00 | 18.50 / 22.00 | 30.00 | - | SD 165 |
| | **225** | 18.50 / 22.00 | 30.00 | 37.00 / 45.00 | - | SE 165 |
| 400 … 630 | **160** | 4.00 / 5.50 | 5.50 | 11.00 | 15.00 / 18.50 | SC 110 |
| | **180** | - | - | - | 22.00 | |
| | **180** | - | - | 18.50 | - | SC 135 |
| | **200** | - | - | - | 30.00 / 37.00 | |
| | **180** | 11.00 | 15.00 | 22.00 | - | SD 135 |
| | **225** | - | - | - | 45.00 | |
| | **200** | 15.00 | 18.50 / 22.00 | 30.00 | - | SD 165 |
| | **225** | 18.50 / 22.00 | 30.00 | 37.00 / 45.00 | - | SE 165 |

The values given in the table refer to a maximum media temperature of 80 °C and can pressures of up to 25 bar.
For media temperatures > 80 °C and/or can pressures > 25 bar, stronger magnetic couplings may need to be selected.
The following information must be available for the design of a magnetic coupling:

- Pump size
- Pump pressure (pressure and suction side)
- Operating and start-up viscosity
- Exact media designation - required static seals (if possible) - any important media properties
- Power of the drive motor
- Speed or speed range
- Switch-on type – direct or with frequency converter
- Media and ambient temperature

# Technical data – accessories

## Bellhousing

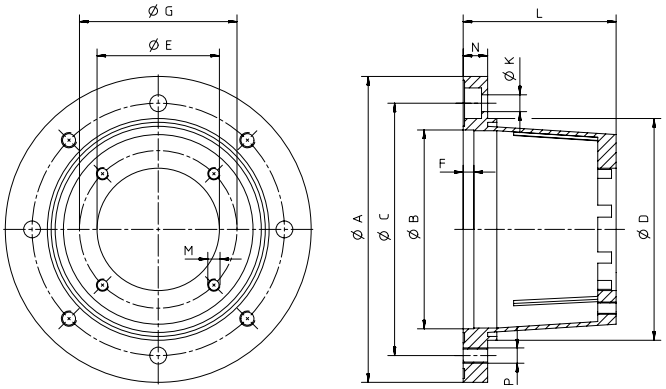


### Type key

| PT | 160 | A | 063 | 80 |
|---|---|---|---|---|
| Short description bellhousing | Outer Ø on motor side | Design A = rigid | Centring Ø on pump side | Total length bellhousing |

| Pump | IEC motor size | A | B | C | D | E | F | G | K | L | M | N | P | Bellhousing |
|---|---|---|---|---|---|---|---|---|---|---|---|---|---|---|
| 2.5 … 25 | **71 M** | 160 | 110 | 130 | 110 | 63.0 | 7 | 85.0 | 9 | 80 | M8 | 13 | M8 | PT 160-A-063-80 |
| | **80 M** | 200 | 130 | 165 | 145 | 63.0 | 7 | 85.0 | 11 | 100 | M8 | 16 | M10 | PT 200-A-063-100 |
| | **90 S/L** | 200 | 130 | 165 | 145 | 63.0 | 7 | 85.0 | 11 | 100 | M8 | 16 | M10 | PT 200-A-063-100 |
| | **100 L / 112 M** | 250 | 180 | 215 | 190 | 63.0 | 7 | 85.0 | 14 | 120 | M8 | 19 | M12 | PT 250-A-063-120 |
| | **132 S/M** | 300 | 230 | 265 | 234 | 63.0 | 7 | 85.0 | 14 | 144 | M8 | 20 | M12 | PT 300-A-063-144 |
| 32 … 80 | **80 M** | 200 | 130 | 165 | 145 | 80.0 | 7 | 103.0 | 11 | 100 | M8 | 16 | M10 | PT 200-A-080-100 |
| | **90 S/L** | 200 | 130 | 165 | 145 | 80.0 | 7 | 103.0 | 11 | 110 | M8 | 16 | M10 | PT 200-A-080-110 |
| | **100 L /112 M** | 250 | 180 | 215 | 190 | 80.0 | 7 | 103.0 | 14 | 124 | M8 | 18 | M12 | PT 250-A-080-124 |
| | **132 S/M** | 300 | 230 | 265 | 234 | 80.0 | 7 | 103.0 | 14 | 144 | M8 | 20 | M12 | PT 300-A-080-144 |
| | **160 M/L** | 350 | 250 | 300 | 260 | 80.0 | 7 | 103.0 | 18 | 188 | M8 | 26 | M16 | PT 350-A-080-188 |
| 100 … 200 | **100 L /112 M** | 250 | 180 | 215 | 190 | 110.0 | 7 | 145.0 | 14 | 135 | M12 | 18 | M12 | PT 250-A-110-135 |
| | **132 S/M** | 300 | 230 | 265 | 234 | 110.0 | 7 | 145.0 | 14 | 168 | M12 | 20 | M12 | PT 300-A-110-168 |
| | **160 M/L** | 350 | 250 | 300 | 260 | 110.0 | 7 | 145.0 | 18 | 188 | M12 | 26 | M16 | PT 350-A-110-188 |
| | **180 M/L** | 350 | 250 | 300 | 260 | 110.0 | 7 | 145.0 | 18 | 204 | M12 | 26 | M16 | PT 350-A-110-204 |
| 250 … 630 | **132 S/M** | 300 | 230 | 265 | 234 | 160.0 | 7 | 200.0 | 14 | 196 | M16 | 20 | M12 | PT 300-A-160-196 |
| | **160 M/L** | 350 | 250 | 300 | 260 | 160.0 | 7 | 200.0 | 18 | 228 | M16 | 26 | M16 | PT 350-A-160-228 |
| | **180 M/L** | 350 | 250 | 300 | 260 | 160.0 | 7 | 200.0 | 18 | 228 | M16 | 26 | M16 | PT 350-A-160-228 |
| | **200 M/L** | 400 | 300 | 350 | 300 | 160.0 | 7 | 200.0 | 18 | 228 | M16 | 26 | M16 | PT 400-A-160-228 |
| | **225 S/M** | 450 | 350 | 400 | 350 | 160.0 | 7 | 200.0 | 18 | 262 | M16 | 26 | M16 | PT 450-A-160-262 |
| | **250 M** | 550 | 450 | 500 | 450 | 160.0 | 6 | 200.0 | 18 | 265 | M16 | 26 | M16 | PT 550-A-160-265 |
| 730 … 1500 | **160 M/L** | 350 | 250 | 300 | 260 | 152.4 | 7 | 228.6 | 18 | 256 | M 16 | 26 | M16 | PT 350-A-152.4-256 |
| | **180 M/L** | 350 | 250 | 300 | 260 | 152.4 | 7 | 228.6 | 18 | 256 | M 16 | 26 | M16 | PT 350-A-152.4-256 |
| | **200 M/L** | 400 | 300 | 350 | 300 | 152.4 | 7 | 228.6 | 18 | 228 | M 16 | 26 | M16 | PT 400-A-152.4-228 |
| | **225 S/M** | 450 | 400 | 450 | 350 | 152.4 | 7 | 228.6 | 18 | 262 | M 16 | 26 | M16 | PT 450-A-152.4-262 |
| | **250 M** | 550 | 450 | 500 | 450 | 152.4 | 7 | 228.6 | 18 | 265 | M 16 | 26 | M16 | PT 550-A-152.4-265 |
| | **280 S/M** | 550 | 450 | 500 | 450 | 152.4 | 6 | 228.6 | 18 | 275 | M 16 | 26 | M16 | PT 550-A-152.4-275 |
| | **315 S/M/L** | 660 | 550 | 600 | 550 | 152.4 | 8 | 228.6 | 22 | 310 | M 16 | 32 | M20 | PT 660-A-152.4-310 |
| 1800 … 3150 | On request | | | | | | | | | | | | | |

Dimensions in mm

# Technical data – accessories

## Couplings

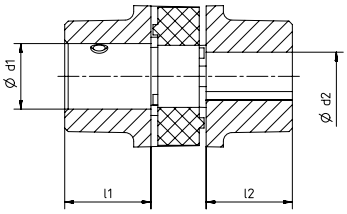


### Type key

| R | A | 19 | Z | 25 | 10 | Z | 25 | 10 |
|---|---|---|---|---|---|---|---|---|
| Short description manufacturer | Material<br>A = Aluminium<br>G = Cast iron | Coupling size | Hub bore cylindrical pump side | Hub length pump side | Bore Ø pump side | Hub bore cylindrical motor side | Hub length motor side | Bore Ø motor side |

| Pump | IEC motor size | l1 | d1 | l2 | d2 | Coupling |
|---|---|---|---|---|---|---|
| 2.5 … 25 | **71 M** | 25 | 14 | 25 | 14 | RA 19-Z25/14-Z25/14 |
| | **80 M** | 25 | 14 | 25 | 19 | RA 19-Z25/14-Z25/19 |
| | **90 S/L** | 25 | 14 | 25 | 24 | RA 19-Z25/14-Z25/24 |
| | **100 L / 112 M** | 30 | 14 | 30 | 28 | RA 24-Z30/14-Z30/28 |
| | **132 S/M** | 35 | 14 | 35 | 38 | RA 28-Z35/14-Z35/38 |
| 32 … 80 | **80 M** | 25 | 24 | 25 | 19 | RA 19-Z25/24-Z25/19 |
| | **90 S/L** | 30 | 24 | 30 | 24 | RA 24-Z30/24-Z30/24 |
| | **100 L /112 M** | 30 | 24 | 30 | 28 | RA 24-Z30/24-Z30/28 |
| | **132 S/M** | 35 | 24 | 35 | 38 | RA 28-Z35/24-Z35/38 |
| | **160 M/L** | 45 | 24 | 45 | 42 | RA 38-Z45/24-Z45/42 |
| 100 … 200 | **100 L /112 M** | 30 | 28 | 30 | 28 | RA 24-Z30/28-Z30/28 |
| | **132 S/M** | 35 | 28 | 35 | 38 | RA 28-Z35/28-Z35/38 |
| | **160 M/L** | 45 | 28 | 45 | 42 | RA 38-Z45/28-Z45/42 |
| | **180 M/L** | 50 | 28 | 50 | 48 | RA 42-Z50/28-Z50/48 |
| 250 … 630 | **132 S/M** | 35 | 38 | 35 | 38 | RA 28-Z35/38-Z35/38 |
| | **160 M/L** | 45 | 38 | 45 | 42 | RA 38-Z45/38-Z45/42 |
| | **180 M/L** | 50 | 38 | 50 | 48 | RA 42-Z50/38-Z50/48 |
| | **200 M/L** | 50 | 38 | 50 | 55 | RA 42-Z50/38-Z50/55 |
| | **225 S/M** | 56 | 38 | 56 | 60 | RA 48-Z56/38-Z56/60 |
| | **250 M** | 65 | 38 | 65 | 65 | RG 55-Z65/38-Z65/65 |
| 730 … 1500 | **160 M** | 50 | 55 | 75 | 42 | RG 42-Z50/55-Z75/42 |
| | **160 L** | 50 | 55 | 75 | 42 | RG 42-Z50/55-Z75/42 |
| | **180 M** | 50 | 55 | 75 | 48 | RG 42-Z50/55-Z75/48 |
| | **180 L** | 50 | 55 | 75 | 48 | RG 42-Z50/55-Z75/48 |
| | **200 M** | 50 | 55 | 50 | 55 | RG 42-Z50/55-Z50/55 |
| | **200 L** | 50 | 55 | 50 | 55 | RG 42-Z50/55-Z50/55 |
| | **225 S** | 56 | 55 | 56 | 60 | RG 48-Z56/55-Z56/60 |
| | **225 M** | 56 | 55 | 56 | 60 | RG 48-Z56/55-Z56/60 |
| | **250 M** | 65 | 55 | 65 | 65 | RG 55-Z65/55-Z65/65 |
| | **280 S** | 75 | 55 | 75 | 75 | RG 65-Z75/55-Z75/75 |
| | **280 M** | 75 | 55 | 75 | 75 | RG 65-Z75/55-Z75/75 |
| | **315 S** | 75 | 55 | 75 | 75 | RG 65-Z75/55-Z75/75 |
| | **315 M** | 85 | 55 | 85 | 80 | RG 75-Z85/55-Z85/80 |
| | **315 L** | 85 | 55 | 85 | 80 | RG 75-Z85/55-Z85/80 |
| 1800 … 3150 | On request | | | | | |

Dimensions in mm

# Technical data – accessories

## SAE threaded flange for KF / KF-F 2.5 … 630

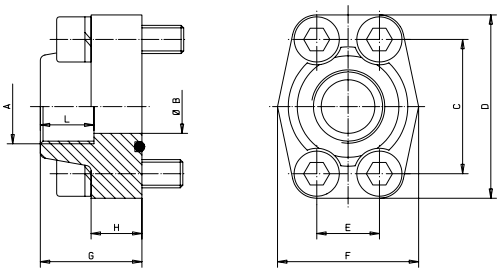


| Nominal size | A | $B_{max}$ | C | D* | E | F* | G | H* | $L_{min}$ | Screws 10.9 | O-ring** | Maximum pressure** | Weight |
|---|---|---|---|---|---|---|---|---|---|---|---|---|---|
| ³/₄″ | G¹/₂ | 13 | 47.63 | 65 | 22.23 | 50 | 36 | 18 | 14 | M10x35 | 24.99 x 3.53 | 350 | 0.54 |
| | G³/₄ | 19 | 47.63 | 65 | 22.23 | 50 | 36 | 18 | 16 | M10x35 | 24.99 x 3.53 | 350 | 0.51 |
| 1″ | G¹/₂ | 13 | 52.37 | 70 | 26.19 | 55 | 38 | 18 | 14 | M10x35 | 32.92 x 3.53 | 315 | 0.64 |
| | G³/₄ | 19 | 52.37 | 70 | 26.19 | 55 | 38 | 18 | 16 | M10x35 | 32.92 x 3.53 | 315 | 0.61 |
| | G1 | 25 | 52.37 | 70 | 26.19 | 55 | 38 | 18 | 18 | M10x35 | 32.92 x 3.53 | 315 | 0.58 |
| 1¹/₄″ | G³/₄ | 19 | 58.72 | 79 | 30.18 | 68 | 41 | 21 | 16 | M10x40 | 37.69 x 3.53 | 250 | 0.92 |
| | G1 | 25 | 58.72 | 79 | 30.18 | 68 | 42 | 25 | 18 | M10x40 | 37.69 x 3.53 | 250 | 0.88 |
| | G1¹/₄ | 32 | 58.72 | 79 | 30.18 | 68 | 41 | 21 | 20 | M10x40 | 37.69 x 3.53 | 250 | 0.79 |
| 1¹/₂″ | G1 | 25 | 69.85 | 93 | 35.71 | 78 | 45 | 25 | 18 | M12x45 | 47.22 x 3.53 | 200 | 1.36 |
| | G1¹/₄ | 32 | 69.85 | 93 | 35.71 | 78 | 45 | 27 | 20 | M12x45 | 47.22 x 3.53 | 200 | 1.30 |
| | G1¹/₂ | 38 | 69.85 | 93 | 35.71 | 78 | 45 | 25 | 22 | M12x45 | 47.22 x 3.53 | 200 | 1.25 |
| 2″ | G1 | 25 | 77.77 | 102 | 42.88 | 90 | 45 | 25 | 18 | M12x45 | 56.74 x 3.53 | 200 | 1.64 |
| | G1¹/₄ | 32 | 77.77 | 102 | 42.88 | 90 | 45 | 25 | 20 | M12x45 | 56.74 x 3.53 | 200 | 1.60 |
| | G1¹/₂ | 38 | 77.77 | 102 | 42.88 | 90 | 45 | 25 | 22 | M12x45 | 56.74 x 3.53 | 200 | 1.45 |
| | G2 | 51 | 77.77 | 102 | 42.88 | 90 | 45 | 25 | 26 | M12x45 | 56.74 x 3.53 | 200 | 1.39 |
| 2¹/₂″ | G2 | 51 | 88.90 | 114 | 50.80 | 105 | 50 | 25 | 26 | M12x45 | 69.44 x 3.53 | 160 | 1.65 |
| | G2¹/₂ | 63 | 88.90 | 114 | 50.80 | 105 | 50 | 25 | 30 | M12x45 | 69.44 x 3.53 | 160 | 1.60 |
| 3″ | G2¹/₂ | 63 | 106.38 | 134 | 61.93 | 124 | 50 | 27 | 30 | M16x50 | 85.32 x 3.53 | 138 | 2.68 |
| | G3 | 73 | 106.38 | 134 | 61.93 | 124 | 50 | 27 | 30 | M16x50 | 85.32 x 3.53 | 138 | 2.58 |
| 3¹/₂″ | G3 | 73 | 120.65 | 152 | 69.85 | 136 | 48 | 27 | 30 | M16x50 | 98.02 x 3.53 | 35 | 2.93 |
| | G3¹/₂ | 89 | 120.65 | 152 | 69.85 | 136 | 48 | 27 | 30 | M16x50 | 98.02 x 3.53 | 35 | 2.83 |
| 4″ | G3¹/₂ | 89 | 130.20 | 162 | 77.80 | 146 | 48 | 27 | 30 | M16x50 | 110.72 x 3.53 | 35 | 3.42 |
| | G4 | 99 | 130.20 | 162 | 77.80 | 146 | 48 | 27 | 30 | M16x50 | 110.72 x 3.53 | 35 | 3.27 |

## SAE weld-on flange for KF / KF-F 2.5 … 630

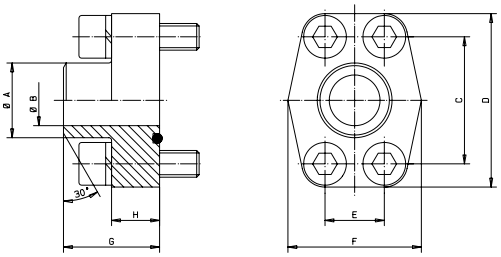


| Nominal size | A | $B_{max}$ | C | D* | E | F* | G | H* | Screws 10.9 | O-ring** | Maximum pressure** | Weight |
|---|---|---|---|---|---|---|---|---|---|---|---|---|
| ³/₄″ | 28.0 | 19 | 47.63 | 65 | 22.23 | 50 | 36 | 18 | M10x35 | 24.99 x 3.53 | 350 | 0.51 |
| 1″ | 34.0 | 25 | 52.37 | 70 | 26.19 | 55 | 38 | 18 | M10x35 | 32.92 x 3.53 | 315 | 0.58 |
| 1¹/₄″ | 42.8 | 32 | 58.72 | 79 | 30.18 | 68 | 41 | 21 | M10x40 | 37.69 x 3.53 | 250 | 0.79 |
| 1¹/₂″ | 48.6 | 38 | 69.85 | 93 | 35.71 | 78 | 44 | 25 | M12x45 | 47.22 x 3.53 | 200 | 1.25 |
| 2″ | 61.0 | 51 | 77.77 | 102 | 42.88 | 90 | 45 | 25 | M12x45 | 56.74 x 3.53 | 200 | 1.39 |
| 2¹/₂″ | 77.0 | 63 | 88.90 | 114 | 50.80 | 105 | 50 | 25 | M12x45 | 69.44 x 3.53 | 160 | 1.60 |
| 3″ | 92.0 | 73 | 106.38 | 134 | 61.93 | 124 | 50 | 27 | M16x50 | 85.32 x 3.53 | 138 | 2.58 |
| 3¹/₂″ | 103.0 | 89 | 120.65 | 152 | 69.85 | 136 | 48 | 27 | M16x50 | 98.02 x 3.53 | 35 | 2.83 |
| 4″ | 115.5 | 99 | 130.20 | 162 | 77.80 | 146 | 48 | 27 | M16x50 | 110.72 x 3.53 | 35 | 3.27 |

* Dimensions dependent on manufacturer.
** O-ring material with hardness 90 Shore A

Material:
Steel S355J2G3 or equivalent
Stainless steel 1.4404 or equivalent

Dimensions in mm / Weights in kg

# Technical data – accessories

## DN-flange for KF 730 … 3150

### DN 132 / BCD 180 for KF 730 … 1000

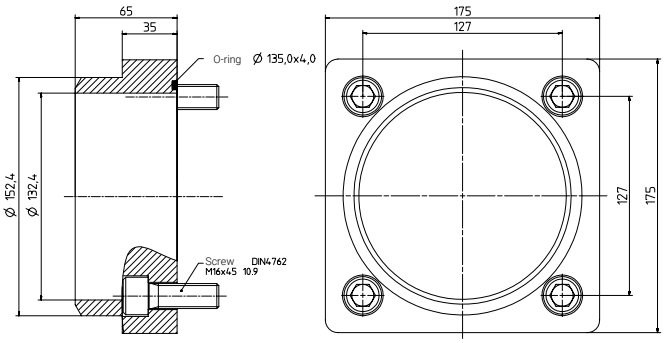


### DN 160 / BCD 210 for KF 1250 … 1500

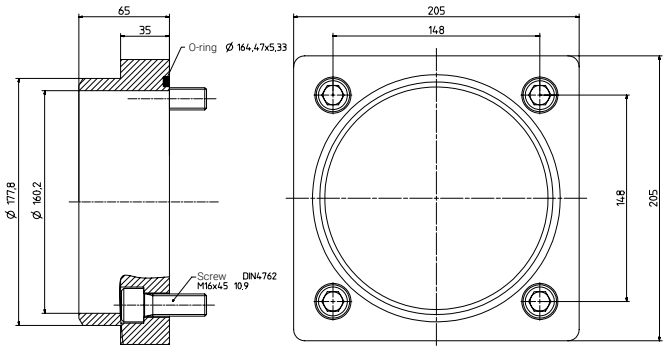


**Note**
Flanges for KF 1800 … 3150 on request.

Dimensions in mm

**KRACHT GmbH**
Gewerbestrasse 20
58791 Werdohl, Germany
**Phone:** +49 2392 935 0
**E-Mail:** info@kracht.eu

**kracht.eu**

Errors and technical changes reserved
KF 2.5 … 3150/EN/06.2026

**Part of Atlas Copco Group**

KRACHT®
FLUID TECHNOLOGY AND SYSTEMS