General Specifications

FCN Autonomous Controller Hardware (FCN-500)

GS 34P02Q14-01E

■ GENERAL

This document describes the general specifications of the FCN autonomous controller with NFCP501/ NFCP502 CPU module. (FCN is an acronym for field control node.)

Notation in this document:

- The term “FCN” refers to the module consisting type autonomous controllers.
- The term “FCN-500” refers to the autonomous controllers with NFCP501/NFCP502 CPU module.

For Function, refer to FCN Autonomous Controller Functions (FCN-500), GS 34P02Q03-01E.

■ FEATURES

- High-performance, high-reliability modular controller
- Memory with ECC
- Low heat dissipation eliminates the need for a fan
- A wealth of RAS features — CPU self-diagnostics, temperature monitoring, I/O diagnostics, and more
- The CPU, power supply module, internal communication bus on backboard (SB bus), E2 bus (extension bus), and control network (Ethernet port 1 and 2) can all be duplexed, and all modules are hot-swappable. Use a couple of the CPU module of the same type to make the CPU module duplex configuration.
- Can function as link active schedulers (LASs) for low-speed voltage mode (H1) FOUNDATION Fieldbus segments, and link up FOUNDATION Fieldbus-enabled field devices.

YOKOGAWA

Yokogawa Electric Corporation
2-9-32, Nakacho, Musashino-shi, Tokyo, 180-8750 Japan

GS 34P02Q14-01E
©Copyright Mar. 2016(YK)
23rd Edition Dec. 5, 2024(YK)

■ CONFIGURATION

An FCN-500 consists of the following:

- Base module
- Power supply module
- CPU module
- E2 bus interface module (extending the unit) (*1)
- SB bus repeat module (extending the SB bus to connect an extension unit) (*1)
- I/O modules

*1: SB bus repeat module and E2 bus interface module can not be used together.

There are four types of base module.

- NFBU200 base module (long):	Control unit and extension unit sharing, duplexed power supply possibility
- N2BU051 base module (short):	Control unit and extension unit sharing
- NFBU050 base module (short):	Control unit only, for low power
- N2BU030 base module (compact):	Control unit and extension unit sharing

● Control unit alone

The control unit is unit with CPU module. The maximum number of I/O modules that can be implemented depends on the type of base module and the number of CPUs.

Maximum I/O Module Configurations

Base Module	Unit Configuration	Standard	Duplexed (*1)
NFBU200 base module (long)	Control unit alone	Max. 8 modules	Max. 6 modules
N2BU051 base module (short)	Control unit alone	Max. 3 modules	Not applicable (*2)
NFBU050 base module (short)	Control unit alone	Max. 3 modules	Not applicable (*2)
N2BU030 base module (compact)	Control unit alone	Max. 1 module	Not applicable (*2)

*1: When CPU modules are duplexed
*2: Neither power supply nor CPU modules can be duplexed on N2BU051, NFBU050 or N2BU030.

Example: Standard control unit

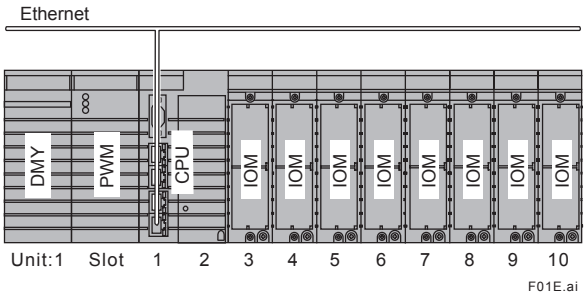

Example: Control unit with duplexed CPU and power supply modules

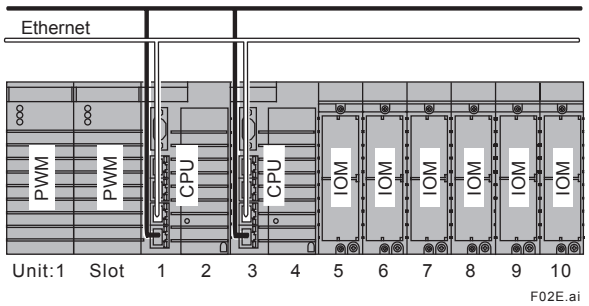

All Rights Reserved. Copyright © 2016, Yokogawa Electric Corporation

Example: Short control unit

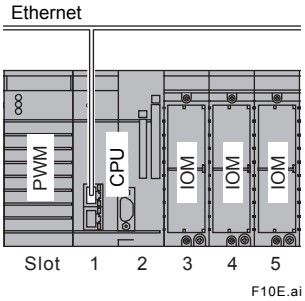

Example: Compact control unit

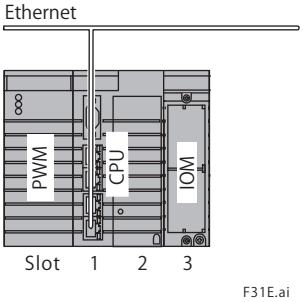

Abbreviation	Description
PWM	Power supply module
CPU	CPU module
IOM	I/O module
N2EB	E2 bus interface module
NFSB	SB bus repeat module
DMY	Dummy cover for power supply Module Slot

● Unit extension with E2 bus

Up to eight extension units can be connected to the control unit using the E2 bus interface modules. Two ports of the E2 bus interface module mounted on the control unit can be connected to extension units as separate lines. The maximum number of extendable units that can be connected is a maximum of 8 units in total of two lines. Three types of base modules (NFBU200, N2BU051 or N2BU030) can be used as control unit and extension unit. By installing two E2 bus interface modules in each base module, it is possible to duplex E2 bus. (*1)

Connect each E2 bus interface module with UTP straight cable (CAT 5e or higher). The distance between units can be extended up to 100 m.

*1: When using the compact base module for the control unit, it is not possible to duplex the communication lines.

Maximum I/O Module Configurations

Base Module	Unit Configuration	Standard	Duplexed (*1)
NFBU200 base module (long)	Control unit with 8 extension units (*2)	Max. 79 modules	Max. 68 modules

Note: NFCP501/NFCP502 CPU module style S2 or later is required to use the E2 bus interface module.
*1: When CPU and E2 bus interface modules are duplexed.
*2: When NFBU200 base modules are used in all extension units.

Extension of Transmission distance by Optical fiber

The transmission distance between units can be extended by converting the system from UTP straight cable to fiber optic cable with third party's media converters. Only Layer 1 (Physical Layer) media converters which simply convert packets from electric signal to optical signal can be used for the E2 bus. Refer to the verified media converter information and precaution on Yokogawa Partner Portal STARDOM site when choosing the model.

https://partner.yokogawa.com/global/member/rtu/os/index.htm#tab04

All Rights Reserved. Copyright © 2016, Yokogawa Electric Corporation

Example: Standard control unit + 8 extension units with E2 bus interface modules / 1 lines

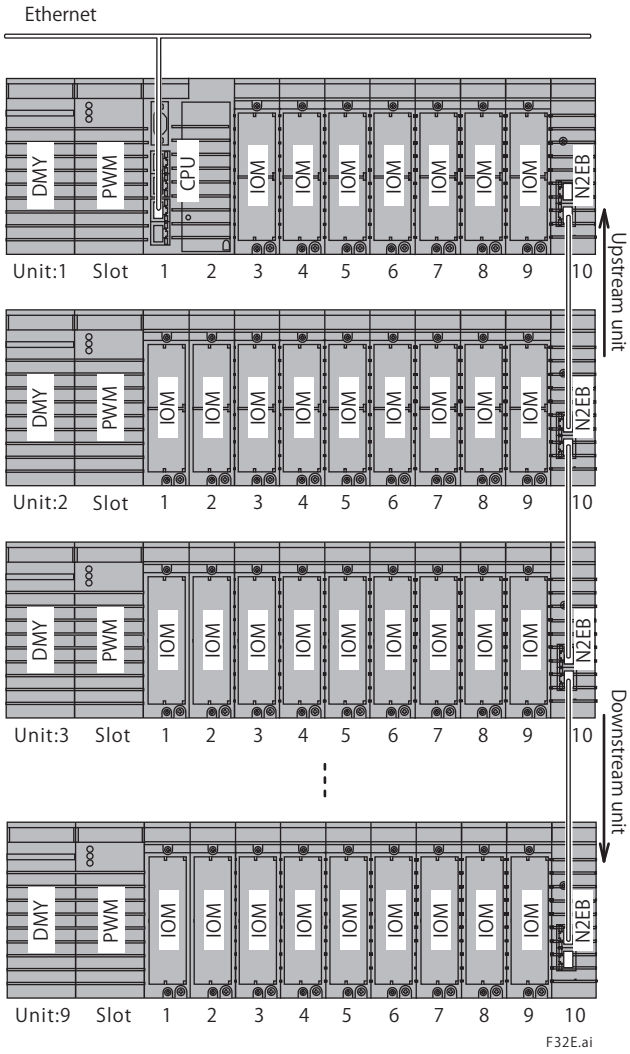

Example: Control unit with duplexed CPU modules, power supply modules, and E2 bus + 8 extension units / 1 lines

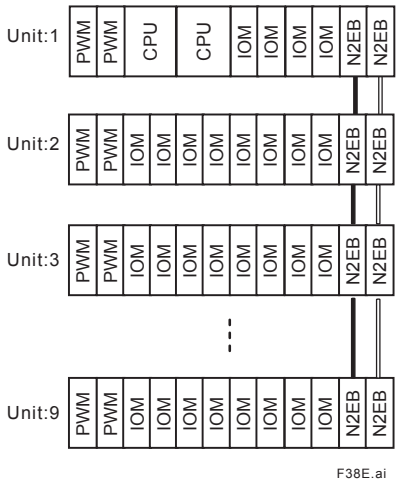

All Rights Reserved. Copyright © 2016, Yokogawa Electric Corporation

Example: Control unit with duplexed CPU modules, power supply modules, and E2 bus + 8 extension units / 2 lines

Note: The CPU module, power supply module, and E2 bus can be made duplex individually, when required.

Example: Mixed base module configuration, E2 bus + 8 extension units / 2 lines

Note: Three kinds of base modules (NFBU200, N2BU051 or N2BU030) can be arranged according to the number of I/O points and installation environment required for the control unit and extension unit.

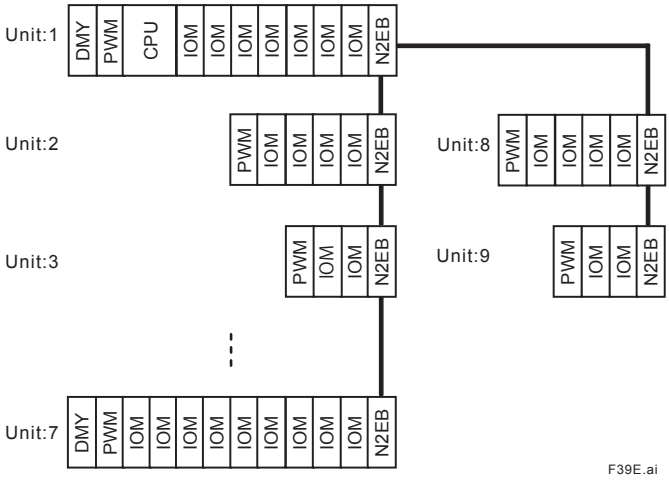

All Rights Reserved. Copyright © 2016, Yokogawa Electric Corporation

● Unit extension with SB bus

Up to two extension units can be connected using the SB bus repeat modules. The SB bus repeat module can be mounted on the base module (NFBU200 only). By installing two SB bus repeat modules on each base module, it is possible to duplex the SB bus. Connect each SB bus repeat module with a dedicated cable.

Maximum I/O Module Configurations

Base Module	Unit Configuration	Standard	Duplexed (*1)
NFBU200 base module (long)	Control unit with 2 extension units	Max. 25 modules	Max. 20 modules

*1: When CPU and SB bus repeat modules are duplexed.

Example: Standard control unit + 2 extension units with SB bus reprat modules

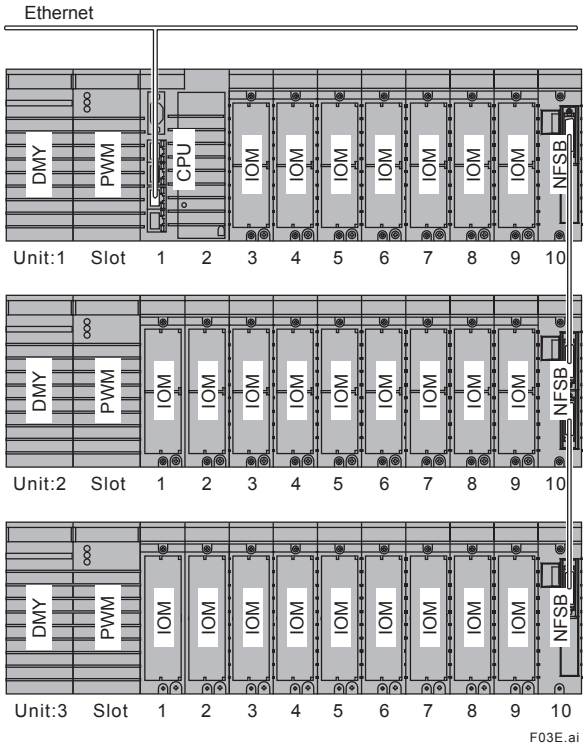

Example: Control unit with duplexed CPU modules, power supply modules, and SB bus + 2 extension units

Note: The CPU module, power supply module, and SB bus can be made duplex individually, when required.

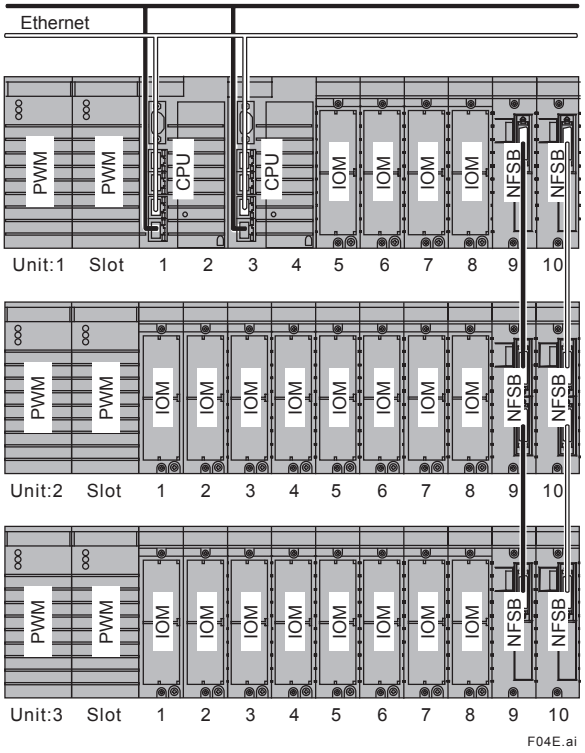

All Rights Reserved. Copyright © 2016, Yokogawa Electric Corporation

■ INSTALLATION REQUIREMENTS

Item		Specification	
		FCN-500 (NFCP501-□0□/NFCP502 -□0□ Standard Type)	**FCN-500 (NFCP501-□1□/NFCP502-□1□ Extended Temperature range Type)**
Ambient temperature	Operation	0° to 55°C	-20° to 70°C (*1)
	Transportation	-40° to 85°C	
Ambient humidity	Operation	5 to 95 %RH (no condensation)	
	Transportation	5 to 95 %RH (no condensation)	
Ambient temperature fluctuation	Operation	Within ±10°C/h	
	Transportation	Within ±20°C/h	
Dust		0.3 mg/m^3 or less	
Protection class		IP20	
Resistance to corrosive gases		ANSI/ISA S71.04 Class G2 (Standard) (ANSI/ISA S71.04 Class G3, option)	
Resistance to vibration		0.15 mm P-P (5 to 58 Hz), 1 G (58 to 150 Hz)	
Resistance to shock		15 G, 11 ms (during power-off, for sine half-waves in XYZ-directions)	
Altitude		2000 m or less	
Noise	Electric field	3 V/m or less (26 MHz to 1 GHz)	
	Magnetic field	30 A/m (AC) or less, 400 A/m (DC) or less	
	Electrostatic discharge	4 kV or less contact discharge, 8 kV or less aerial discharge	
Grounding		Apply the grounding system which is defined by the rules and standards of the country or the region.	
Cooling		Natural air cooling	

*1: It depends on I/O modules. Refer to "■ I/O AND RELATED MODULE" for details

All Rights Reserved. Copyright © 2016, Yokogawa Electric Corporation

■ COMPLIANT STANDARDS

Item		Standards
Safety standards (*1) (*5)(*8)	CSA	CAN/CSA-C22.2 No.61010-1 CAN/CSA-C22.2 No.61010-2-201 CAN/CSA-C22.2 No.61010-2-030
	CE Marking Low Voltage Directive	EN 61010-1 EN IEC 61010-2-201 EN IEC 61010-2-030
	UKCA Marking Safety Regulation	EN 61010-1 EN IEC 61010-2-201 EN IEC 61010-2-030
	EAC Marking	CU TR 004
	Morocco Compliance Marking (Cم Marking)	NM EN 61010 1 NM EN 61010 2 201 NM EN 61010 2 030
EMC standards (*8)	CE Marking EMC Directive	EN 55011 Class A Group 1 (emission) (*7) EN 61000-6-2 (immunity) (*1) (*2) (*6) EN 61000-3-2 EN 61000-3-3 (*3)
	UKCA Marking EMC Regulation	EN 55011 Class A Group 1 (emission) (*7) EN 61000-6-2 (immunity) (*1) (*2) (*6) EN 61000-3-2 EN 61000-3-3 (*3)
	RCM	EN 55011 Class A Group 1 (*7)
	KC Marking	Korea Electromagnetic Conformity Standard
	EAC Marking	CU TR 020
	Morocco Compliance Marking (Cم Marking)	NM EN 55011 Class A Group 1 (*7) NM EN 61000 6 2 NM EN 61000 3 2 NM EN 61000 3 3
Standards for Hazardous Location Equipment (*8) (*9)	US (FM) Nonincendive (*1)	Class I Division 2, Groups A, B, C, D T4 FM 3600:2018 FM 3611:2018 FM 3810:2018 ANSI/UL 121201:2017 ANSI/UL 61010-1:2012 ANSI/UL 61010-2-30:2012 ANSI/UL 61010-2-201:2014
	ATEX Ex “ec” (*10) (*11)	Ⓔx II 3 G Ex ec nC II C T4 Gc X (*12) EN IEC 60079-0:2018 EN IEC 60079-7:2015 + A1:2018 EN 60079-15:2010 EN IEC 60079-15:2019
	UKEX Ex “ec” (*10) (*11)	Ⓔx II 3 G Ex ec nC II C T4 Gc X (*12) EN IEC 60079-0:2018 EN IEC 60079-7:2015 + A1:2018 EN 60079-15:2010 EN IEC 60079-15:2019
	Canada (CSA) Non-Incendive (*1)	Class I Division 2, Groups A, B, C, D T4 C22.2 No.213-17 CAN/CSA-C22.2 No.61010-1-12 + Amd1-18 CAN/CSA-C22.2 No.61010-2-030:18 CAN/CSA-C22.2 No.61010-2-201:18
	IECEx Ex “ec” (*11)	Ex ec IIC T4 Gc IEC 60079-0 Ed. 7.0 (2017) IEC 60079-7 Ed. 5.1 (2017)
	Emirates Conformity Assessment Scheme (ECAS-Ex) Ex “ec” (*11)	Ex ec IIC T4 Gc IEC 60079-0 Ed. 7.0 (2017) IEC 60079-7 Ed. 5.1 (2017) UAE.S IEC 60079-0 UAE.S IEC 60079-7
Marine Standards (*13) (*14)	ABS (American Bureau of Shipping)	Marine Vessel Rules, Part4, Chapter 9.
	BV (Bureau Veritas)	Rules for the Classification of Steel ships, Part C Chapter 3 Section 6
	LR (Lloyd’s Register)	Type Approval System Test Specification Number 1
	DNV	Environmental test specification for electrical, electronic and programmable equipment and systems

All Rights Reserved. Copyright © 2016, Yokogawa Electric Corporation

Restriction of Hazardous Substances (*8)	RoHS Directive (*15)	EN IEC 63000:2018
	UK RoHS Regulation	EN IEC 63000:2018
	UAE RoHS Directive	UAE Cabinet Decision No. 10 of 2017

*1: For the rack-mountable devices, DIN rail-mountable devices, and wall-mountable devices to meet the Safety Standards and EMC Standards, the devices must be installed in a lockable metal cabinet. The cabinet must conform to IEC/EN/CSA 61010-2-201 or provide degrees of protection IP3X or above and IK09 or above.
*2: For lightning surge immunity, a device such as a lightning arrester needs to be installed externally. Some module can select a pressure clamp terminal block with surge absorber. For details, see “Terminal Block” (GS 34P02Q41-01E).
*3: The specified magnitude of the voltage drop determined by the cable wiring length needs be met.
*5: To be compliant with these standards, the FCN’s cable which is drawn out from the metal, needs to be used the VW-1 class or more of flame-retardant cable.
*6: When using the NFLP121, mount one (A1193MN) ferrite core on the NFLP121 side of the PROFIBUS cable to meet the EMC standards.
*7: A Class A hardware device is designed for use in the industrial environment. Please use this device in the industrial environment only.
*8: For modules conforming to each standards, refer to the section “I/O AND LERATED MODULE” and the table “List of FCN’s Modules and Compliant Standards, Installation Limitations” of this document.
*9: Refer to TI 34P02Q91-01E for the products meeting NI.
*10: When FCN is used for regions where the ATEX/UKEX applies, the Instruction Manual, “Explosion Protection of FCN/FCJ Products” (IM 34P02Q11-02E) is required for safer installation and wiring.
*11: To be compliant with these standards, the FCN hardware needs to be installed in a lockable metal cabinet of IP54 or higher protection rating.
*12: This marking is the explosion-proof specification for FCN. The marking of each module is either “Ⓔx II 3G Ex ec II C T4 Gc X” or “Ⓔx II 3G Ex ec nC II C T4 Gc X”. Symbol ‘X’ denotes the specific condition of use. See “Explosion Protection of FCN/FCJ Products” (IM 34P02Q11-02E) for detail.
*13: Refer to TI 34P02Q93-01E for the products meeting the Marine Standards.
*14: Please inquire about marine standards conformity to each country/region.
*15: Including the confirmation of 10 restricted substances defined in the Commission Delegated Directive(EU) 2015/863 amending Annex II to Directive 2011/65/EU.

“Administration on the Control of Pollution Caused by Electrical and Electronic Products” in the People’s Republic of China.

The Product information required by the law is disclosed in the Yokogawa’s website. Please refer to the following site.

http://www.yokogawa.com/dcs/CNRoHS/

This instrument is intended to be sold and used only as a part of equipment which is excluded from EU WEEE (Waste Electrical and Electronic Equipment) Directive and UK WEEE Regulation, such as large-scale stationary industrial tools, a large-scale fixed installation and so on, and therefore, subjected to the exclusion from the scope of the EU WEEE Directive and the UK WEEE Regulation.

All Rights Reserved. Copyright © 2016, Yokogawa Electric Corporation

■ BASE MODULE

A base module is a chassis on which various function modules such as CPU, power supply, E2 bus interface, SB bus repeat, and I/O modules are mounted to configure a control unit or extension unit.

● Features

Feature of Base Modules

Type	Model	Power Supply Slots	I/O Slots	SB Bus (Internal Backboard Bus)
Long	NFBU200	2 slots	10 slots	Duplex
Short	N2BU051	1 slot	5 slots	Duplex
	NFBU050	1 slot	5 slots	Single
Compact	N2BU030	1 slot	3 slots	Duplex

Number of Mountable Modules on Control unit alone

Usage	Model	Power Supply Modules	CPU Modules (*1)	Extension bus Module	I/O Modules
Control Unit	NFBU200	Single or Duplexed	Single	-	max 8 modules
			Duplex	-	max 6 modules
	N2BU051	Single	Single	-	max 3 modules
	NFBU050	Single	Single	-	max 3 modules
	N2BU030	Single	Single	-	max 1 module

Number of Mountable Modules with E2 bus interface module

Usage	Model	Power Supply Modules	CPU Modules (*1)	E2 bus Interface Modules	I/O Modules
Control Unit	NFBU200	Single or Duplex	Single	Single	max 7 modules
				Duplex	max 6 modules
			Duplex	Single	max 5 modules
				Duplex	max 4 modules
	N2BU051	Single	Single	Single	max 2 modules
				Duplex	max 1 module
	N2BU030	Single	Single	Single	none
Extension Unit	NFBU200	Single or Duplex	-	Single	max 9 modules
				Duplex	max 8 modules
	N2BU051	Single	-	Single	max 4modules
				Duplex	max 3 modules
	N2BU030	Single	-	Single	max 2 modules
				Duplex	max 1 module

Number of Mountable Modules with SB bus repeat module

Usage	Model	Power Supply Modules	CPU Modules (*1)	SB bus Repeat Modules	I/O Modules
Control Unit	NFBU200	Single or Duplex	Single	Single	max 7 modules
				Duplex	max 6 modules
			Duplex	Single	max 5 modules
				Duplex	max 4 modules
Extension Unit	NFBU200	Single or Duplex	-	Single	max 9 modules
				Duplex	max 8 modules

*1: Two slots are occupied for at least one CPU module in the control unit.

All Rights Reserved. Copyright © 2016, Yokogawa Electric Corporation

● Model and Suffix Codes

Base Module (long)

		Description
Model	NFBU200	Base module (long)
Suffix Codes	-S	Standard type
	0	19-inch rack-mounted
	1	DIN rail-mounted
	5	Basic type with no explosion protection
	6	With ISA Standard G3 option and no explosion protection
	E	Basic type with explosion protection
	F	With ISA Standard G3 option and explosion protection

Base Module (short)

		Description
Model	N2BU051	Base module (short, for E2 bus)
Suffix Codes	-S	Standard type
	1	DIN rail-mounted
	5	Basic type with no explosion protection
	6	With ISA Standard G3 option and no explosion protection
	E	Basic type with explosion protection
	F	With ISA Standard G3 option and explosion protection

		Description
Model	NFBU050	Base module (short)
Suffix Codes	-S	Standard type
	1	DIN rail-mounted
	5	Basic type with no explosion protection
	6	With ISA Standard G3 option and no explosion protection
	E	Basic type with explosion protection
	F	With ISA Standard G3 option and explosion protection

Base Module (compact)

		Description
Model	N2BU030	Base module (compact)
Suffix Codes	-S	Standard type
	1	DIN rail-mounted
	5	Basic type with no explosion protection
	6	With ISA Standard G3 option and no explosion protection
	E	Basic type with explosion protection
	F	With ISA Standard G3 option and explosion protection

Optional Accessories

		Description
Model	NFDCV01	Dummy cover for I/O module slot
	NFDCV02	Dummy cover for power supply module slot

All Rights Reserved. Copyright © 2016, Yokogawa Electric Corporation

● Specifications

Item			Specification				
Model			NFBU200-S0□	NFBU200-S1□	N2BU051-S1□	NFBU050-S1□	N2BU030-S1□
Weight			1.9 kg	1.0 kg	0.6 kg	0.6 kg	0.5 kg
Dimensions (W x H x D)			482.6×132.5×40.5 mm	440×131×42.3 mm	283×131×24.2 mm	283×131×24.2 mm	210×131×24.2 mm
Mounting			19-inch rack-mounted	DIN rail-mounted			
Maximum power consumption	5 V	Self-consumption	0.4 A(max)		0.035 A	0.025 A	0.035 A
	24 V	Self-consumption	0				

● Dimensions

19-inch rack-mounted Model (NFBU200)

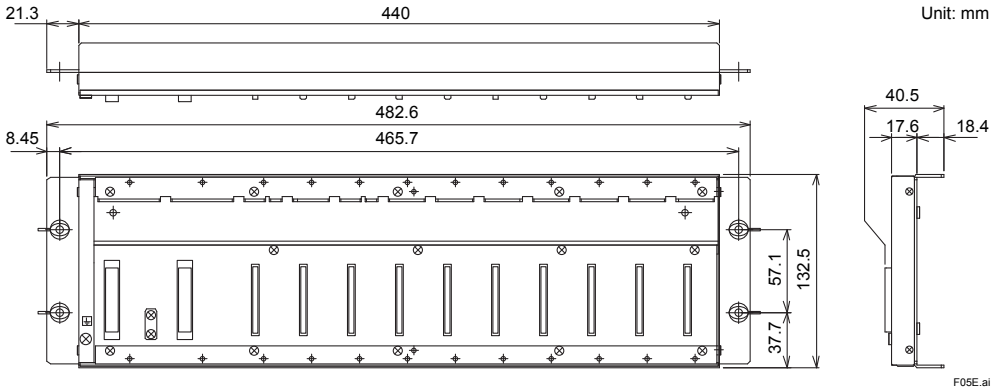

DIN rail-mounted Model (NFBU200)

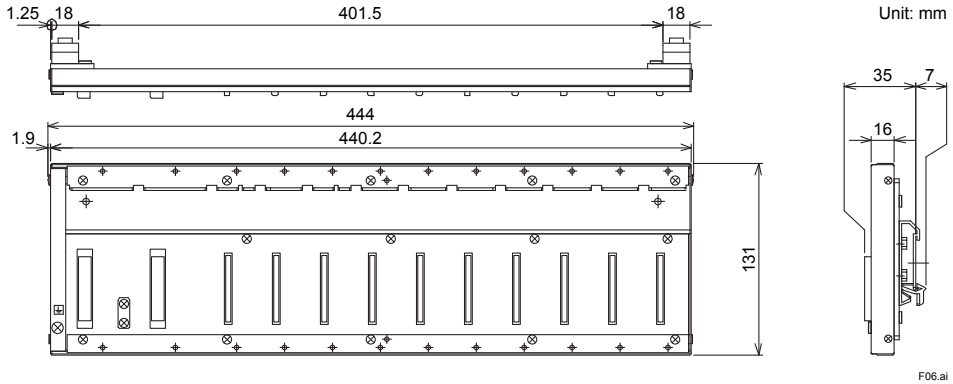

DIN rail-mounted Model (N2BU051, NFBU050)

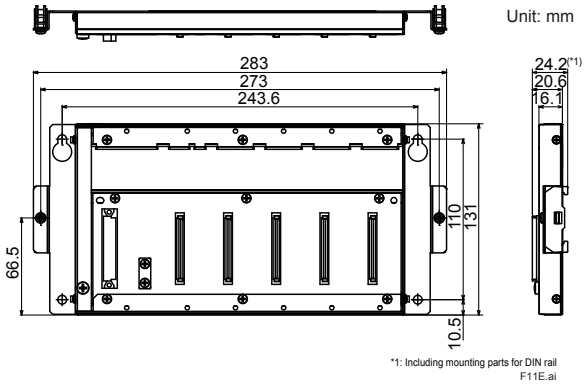

DIN rail-mounted Model (N2BU030)

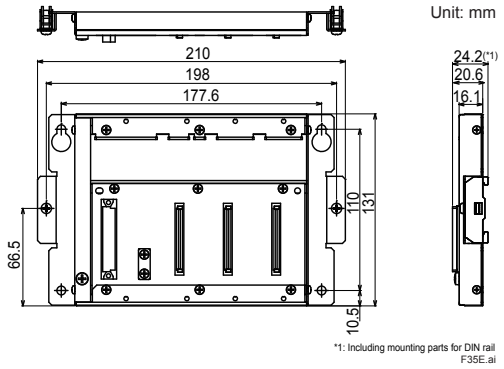

All Rights Reserved. Copyright © 2016, Yokogawa Electric Corporation

■ POWER SUPPLY MODULE

Mounted on a base module, a power supply module supplies steady power to other modules. Two power supply modules can be installed on a base module for redundancy.

This power supply module is equipped with input terminals for a 24 V DC power supply in addition to the main power input. The 24 V DC power input from these terminals are referred to as analog field power supply and fed to analog I/O modules to drive their field interface circuits and supply power to the connected field devices through the base module. However, when a 24 V DC power supply is needed for digital outputs, it must be supplied to individual terminals of the corresponding I/O modules. (For details, see the respective specifications for I/O modules.)

● Model and Suffix Codes

		Description
Model	NFPW441	Power supply module (100-120 V AC input)
Suffix Codes	-5	Standard type with no explosion protection
	-E	Standard type with explosion protection
	0	Basic type
	1	With ISA Standard G3 option

		Description
Model	NFPW442	Power supply module (220-240 V AC input)
Suffix Codes	-5	Standard type with no explosion protection
	0	Basic type
	1	With ISA Standard G3 option

		Description
Model	NFPW444	Power supply module (24 V DC input)
Suffix Codes	-5	Standard type with no explosion protection
	-E	Standard type with explosion protection
	0	Basic type
	1	With ISA Standard G3 option

● Pin Assignment

Power supply terminals (Models NFPW441 and 442)

Pin No.	Name	Signal
1	FLD24 V DC +	24 V analog field power supply (+) (*1)
2	FLD24 V DC –	24 V analog field power supply (-) (*1)
3	G	Ground of line filter
4	L	Power input
5	N	

Power supply terminals (Model NFPW444)

Pin No.	Name	Signal
1	FLD24 V DC +	24 V analog field power supply (+) (*1)
2	FLD24 V DC –	24 V analog field power supply (-) (*1)
3	G	Ground of line filter
4	+	Power input
5	–	

*1: When analog I/O modules such as NFAI141 (with 2-wire transmitter), NFAI135, NFAI841, NFAB841, NFAI835, NFAF135, and NFAP135 are installed, an analog field power supply is needed.

Checking terminals

Pin No.	Name	Signal
1	+5 V-CHK	Checking of 5 V system power
2	+24 V-CHK	Checking of 24 V field power supply
3	GND	Signal grounding

● LEDs

LED Indicator	Color	Description
SYS-POWER	Green	Lights when the 5 V system power output is on.
FLD-POWER	Green	Lights when the 24 V field power supply is on.

All Rights Reserved. Copyright © 2016, Yokogawa Electric Corporation

● Dimensions

Unit: mm

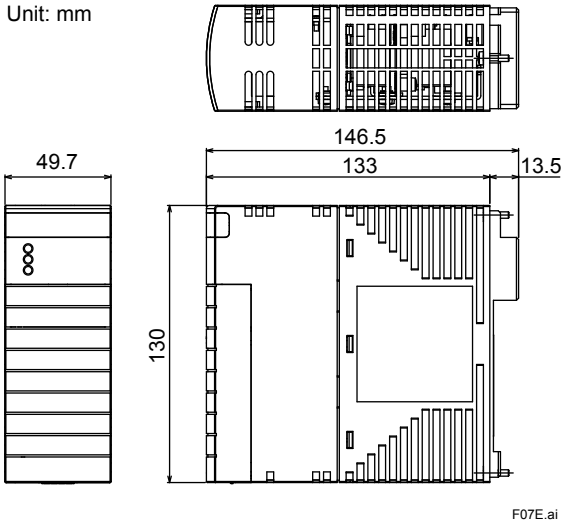

● Specifications

Item			Specification		
Model			NFPW441	NFPW442	NFPW444
Power supply input		Rated input voltage	100 to 120 V AC	220 to 240 V AC	24 V DC
		Input voltage range	80 to 132 V AC (rms)	170 to 264 V AC (rms)	21.6 to 31.2 V DC
		Input frequency	47 to 66 Hz (Rating: 50/60 Hz)		
		Input current	Max. 1.4 A	Max. 0.7 A	Max. 3.3 A
		Fuse rating	3.15 A	3.15 A	6.3 A
		Rush current	Max. 80 A for 5 ms or less	Max. 90 A for 5 ms or less	Max. 20 A
		Leak current	Max. 1 mA		—
		Withstanding voltage	3000 V AC for 1 minute		500 V AC for 1 minute
		Insulation resistance	50 MΩ at 500 V DC		
		Insensitive momentary power-failure time	10 ms (80%)		2 ms (90%)
Output		Rated output voltage	+5.1 V DC		
		Rated output current	0 to 7.8 A		
		Peak current	11.8 A		
		Total output	40 W (60 W peak)		
		Startup time after power-on	Max. 300 ms		
			Max. 100 ms (after a power failure of 200 ms long with the rated input)		
		Overvoltage protection	Max. 7 V		
		Overcurrent protection	Min. 105% (shutdown after 4 to 14 seconds long overcurrent)		
Analog field power supply	Input	Rated input voltage	24 V DC ±10%		
		Input current	Max. 4 A		
		Fuse rating	6.3 A		
	Output	Rated output voltage	Input voltage minus matching-diode drop		
		Rated output current	4 A		
		Overvoltage protection	35 V		
Duplex configuration			Possible (when installed on base module NFBU200)		
Weight			0.6 kg		
Dimensions (W x H x D)			49.7 x 130 x 146.5 mm		

All Rights Reserved. Copyright © 2016, Yokogawa Electric Corporation

■ CPU MODULE

One CPU module is mounted in each control unit, or two for a duplexed CPU configuration. The CPU module runs a real-time operating system, supports programming languages compliant with the IEC 61131-3 international standard, and serves as a Duolet virtual machine.

● Model and Suffix Codes

		Description
Model	NFCP501	CPU module for FCN (with 2 Ethernet ports)
	NFCP502	CPU module for FCN (with 4 Ethernet ports)
Suffix Codes	-S	With standard functions (*1)
	-W	With extended functions (*1)
	0	Standard type
	1	With Extended Temperature range option
	5	Basic type with no explosion protection
	6	With ISA Standard G3 option and no explosion protection
	E	Basic type with explosion protection
	F	With ISA Standard G3 option and explosion protection

*1: The application portfolio which can be used differs by Standard function type and Extended function type. For details, refer to “FCN Autonomous Controller Functions (FCN-500)” (GS 34P02Q03-01E).

● Specifications

Item		Specification	
Model		NFCP501	NFCP502
Style		S2 (*6)	
Processor		Atom E3815 1.46 GHz	
Memory	Main	256 MB with ECC	
	Static RAM	2 MB with ECC, backed up by battery	
Secondary memory		1 GB on-board flash memory	
External media		SD card 1 slot : SDHC (4 to 32GB) Class 10	
Serial Port (*1)		1 RS-232-C port: D-sub 9 pins, male (*2)	
	Communication method	Full/Half duplex (software settings)	
	Synchronisation	Asynchronous	
	Baud rate	0.3, 1.2, 2.4, 4.8, 9.6, 14.4, 19.2, 28.8, 38.4, 57.6, or 115.2 kbps	
Network interface		2 Ethernet ports: RJ45 modular jacks	4 Ethernet ports: RJ45 modular jacks
	Baud rate	1000, 100, 10 Mbps, (1000BASE-T, 100BASE-TX, 10BASE-T)	
I/O interface		SB bus (duplex)	
RAS features		Watchdog timer, temperature monitor, etc.	
Battery (*3)		1000 mAh graphite fluoride lithium battery (*4)	
Display		3 LEDs for CPU status indication, 2 LEDs for Ethernet status indication, 1 LED for SD LED, 1LED for EXEC LED	
Switches		RESET switch, SHUT DOWN switch, FUNC switch, EXEC switch	
Ptotection		CPU cover (with the hole for wire lock)	
Power supply	Supply voltage	5 V DC ±5%	
	Current consumption	Max. 1200 mA	Max. 1700 mA
Duplex configuration		Possible (*5)	
Weight		0.9 kg	
Size	Dimensions (W x H x D)	65.8 x 130 x 149.3 mm	
	Occupying slots	2	

*1: A serial port cannot be used when CPU modules are configured in redundancy.
*2: Connectors are fastened using inch screw threads (No. 4-40 UNC).
*3: With battery exhaustion detection function
*4: A battery is exchangeable at on-line.
*5: Use a couple of the CPU module of the same type (same Model, same suffix codes and same system software version) for the CPU module duplex configuration. A combination of CPU module styles S1 and S2 is possible.
*6: The CPU module NFCP501/NFCP502 style S2 or later is required to use the E2 bus interface module.

All Rights Reserved. Copyright © 2016, Yokogawa Electric Corporation

● Appearances

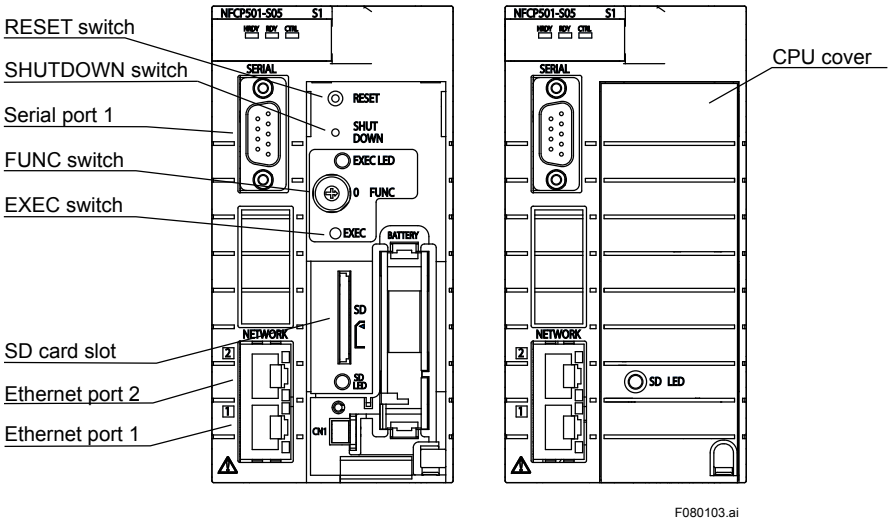

Figure NFCP501 (Left: removed CPU cover, Right: mounted CPU cover)

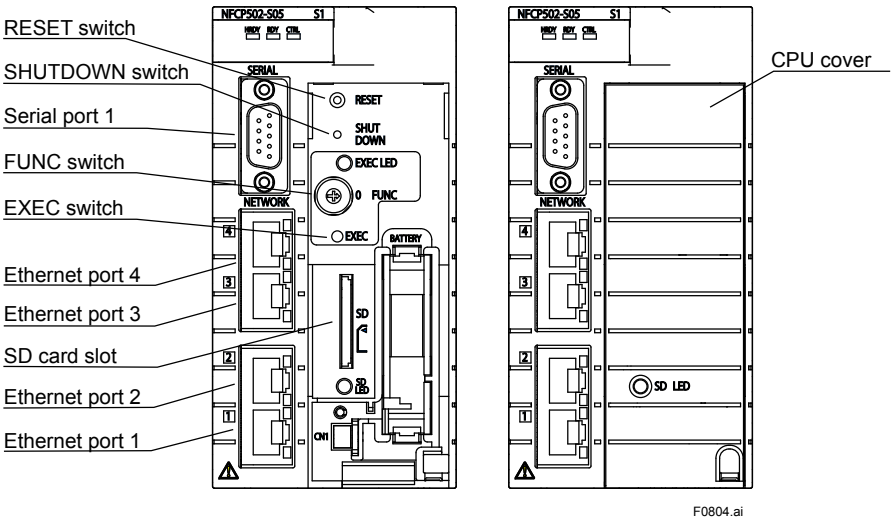

Figure NFCP502 (Left: removed CPU cover, Right: mounted CPU cover)

All Rights Reserved. Copyright © 2016, Yokogawa Electric Corporation

● Pin Assignments of CPU Module's Serial Port

Table Connector Pin Assignment (D-sub 9-pin, male)

Pin No	Signal name	Function
1	CD	Data channel receiving carrier detection
2	RD	Receiving data
3	SD	Transmission data
4	ER	Data terminal ready
5	SG	Signal ground
6	DR	Data set ready
7	RS	Transmission request
8	CS	Transmission enabled
9	—	Not used

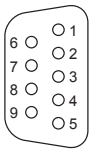

F13E.ai

Figure Pin Position (Front View)

● Switches

RESET Switch
Restart the CPU module.

SHUT DOWN Switch
Terminate the CPU module.

FUNC Switch
Select backup and restore function

EXEC Switch
Execute backup and restore function.

● CPU Cover

Prevent the erroneous operation or mischief of various switches and SD card.

Hole for wire lock
Secure the CPU cover by a wire.

Recommended wire diameter: 1 mm

● LEDs

Operation Status Indicators

LED Indicator	Color	Description
HRDY	Green	Lights when the hardware is normal.
RDY	Green	Lights when the system is normal.
CTRL	Green	Lights when the control actions are carried out normally.

Ethernet Status Indicators (near RJ45 modular jacks)

LED Indicator	Color	Description
LINK	Green	Lights when the connection to a hub is normal.
ACT	Orange	Blinks when the transmission/ reception is on.

SD LED Indicators

LED Indicator	Color	Description
SD	Green	Lights when the SD card is mounted. Blinks when the memory card is accessed.

EXEC LED Indicators

LED Indicator	Color	Description
EXEC	Green	Lights when the maintenance function error. Blinks when the maintenance function is executed.

All Rights Reserved. Copyright © 2016, Yokogawa Electric Corporation

● Dimensions

Unit: mm

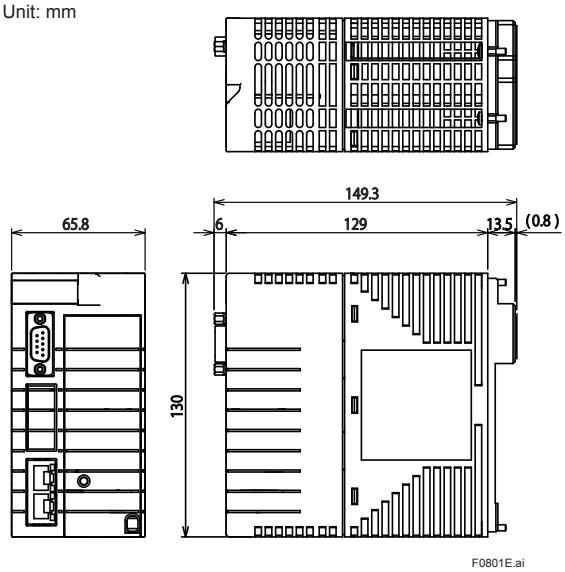

Figure NFCP501 (Demension)

Unit: mm

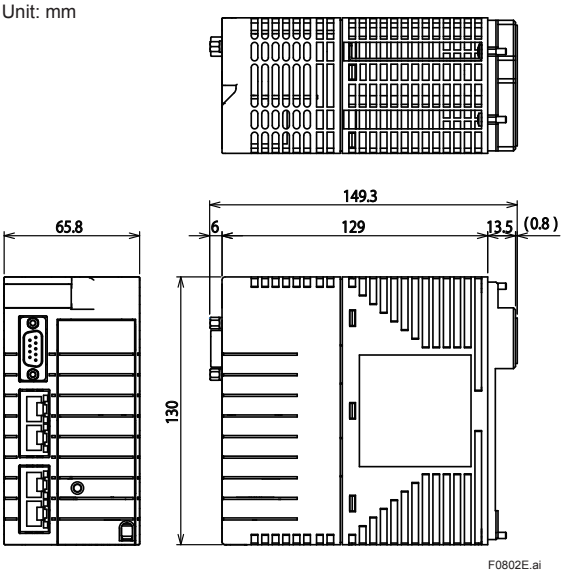

Figure NFCP502 (Dimension)

All Rights Reserved. Copyright © 2016, Yokogawa Electric Corporation

■ E2 BUS INTERFACE MODULE

Used to connect a control unit to I/O extension units.

To duplex the E2 bus, install two E2 bus interface modules in each unit.

Each E2 bus interface module is connected to another via an UTP straight cable (CAT5e or higher).

● Model and Suffix Codes

		Description
Model	N2EB100	E2 bus interface module
Suffix Codes	-S	Standard model
	5	With no explosion protection
	E	With explosion protection
	0	Basic type
	1	With ISA Standard G3 option

● Specifications

Item		Specification
Model		N2EB100
Baud rate		100 Mbps
Transmission distance		Max. 100 m between each unit
Transmission cable		UTP straight cable (CAT5e or higher)
Connector		RJ45 (ISO/IEC 8877)
Connection type		Daisy chain, Max. 2 lines
Extension units		Max. 8 units (9 units including a control unit and 2 lines)
Duplex configuration		Possible
Power supply	Supply voltage	5 V DC±5%
	Current dissipation	Max. 500 mA
Weight		0.2 kg
Size	Dimensions (W x H x D)	32.8 x 130 x 107.5 mm
	Occupying slots	1
Implementable base module		NFBU200 N2BU051 N2BU030
Slots to be inst alled in	Single E2 bus	NFBU200: Slot No. 10 N2BU051: Slot No. 5 N2BU030: Slot No. 3
	Duplexed E2 bus	NFBU200: Slot No. 9 and 10 N2BU051: Slot No. 4 and 5 N2BU030: Control Unit: Unavailable Extension unit :Slot No. 2 and 3
Ports	Master module	Connectable two line with port1/port2
	Slave module	PORT1/UP: To Upstream (master side) PORT2/DOWN: To Downstream
Available CPU module		NFCP501/NFCP502 Style S2 or later
Unit number setting (rotary switch)		0: Invalid 1: Control unit (master module) 2 to 9: Unit number of extension unit (slave module)

● LEDs

Operation Status Indicators

LED Indicator	Color	Description
RDY	Green	Lights when the hardware is normal. Blinks when the rotary switch setting error

E2 bus Status Indicators

LED Indicator	Color	Description
ACT (each port)	Green	Lights when the transmission/ reception is on.
LNK (each port)	Green	Lights when the connection is normal

● Appearances

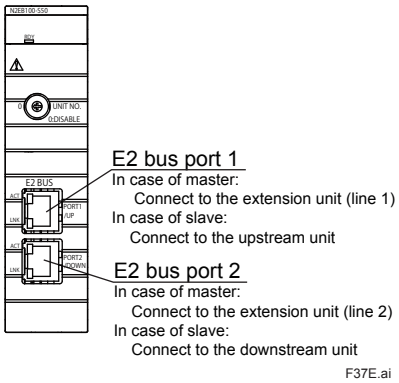

● Dimensions

Unit: mm

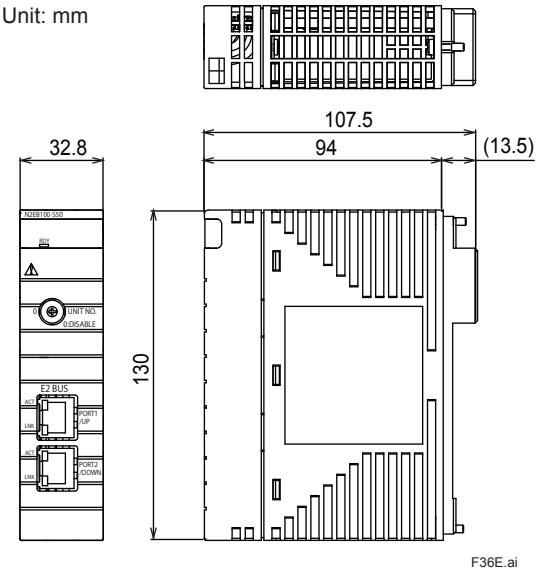

All Rights Reserved. Copyright © 2016, Yokogawa Electric Corporation

■ SB BUS REPEAT MODULE

Used to connect a control unit to I/O extension units.

To duplex the SB bus, install two SB bus repeat modules in each unit.

Each SB bus repeat module is connected to another via a dedicated T-joint and cable.

● Model and Suffix Codes

		Description
Model	NFSB100	SB bus repeat module for FCN
Suffix Codes	-S	Standard model
	5	With no explosion protection
	E	With explosion protection
	0	Basic type
	1	With ISA Standard G3 option
Option Codes	/SBT01	With an SB bus T-joint
	/SBT02	With an SB bus T-joint with built-in terminator

Note: When connecting a control unit and extension units, install at both ends a T-joint with built-in terminator on each SB bus repeat module.

		Description
Models	NFSBT01	SB bus T-joint
	NFSBT02	SB bus T-joint with built-in terminator

		Description
Model	NFCB301	SB bus cable
Suffix Codes	-C030	Cable length 30 cm
	-C100	Cable length 1 m
	-C200	Cable length 2 m
	-C400	Cable length 4 m
	-C800	Cable length 8 m

● Specifications

Item		Specification
Model		NFSB100
Transmission method		Serial communication
Baud rate		128 Mbps
Transmission distance		Max. 8 m per line
Extension units		Max. 2 units (3 units including a control unit)
Duplex configuration		Possible
Power supply	Supply voltage	5 V DC±5%
	Current dissipation	Max. 500 mA
Weight		0.2 kg
Size	Dimensions (W x H x D)	32.8 x 130 x 142.5 mm
	Occupying slots	1
Slots to be installed in		Slot No. 10 (for single SB bus) Slot Nos. 9 and 10 (for duplexed SB bus)

● LEDs

LED Indicator	Color	Description
STATUS	Green	Lights when the hardware is normal.
SND	Green	Lights when the transmission is on.
RCV	Green	Lights when the reception is on.

● Dimensions

Unit: mm

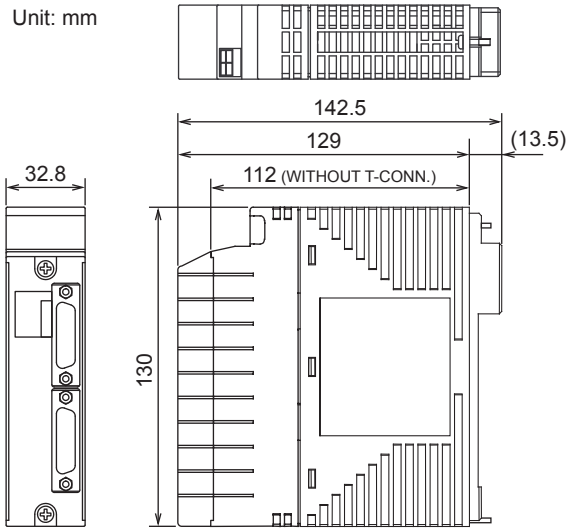

F09E.ai

All Rights Reserved. Copyright © 2016, Yokogawa Electric Corporation

■ I/O AND RELATED MODULE

An autonomous controller FCN supports versatile I/O modules in the following table.

● List of FCN's Modules and Compliant Standards, Installation Limitations

Table List of FCN's Modules and Compliant Standards, Installation Limitations (1/4)

Type	Model	Function	Installation Limitations		Safety	EMC		Explosion protection			Marine (*10)		Hazardous Substances
			Temperature [°C]	Altitude [m]	CSA, CE, UKCA, EAC, Cr	CE, UKCA, KC, EAC, Cr	RCM	US (FM) NI, Canada (CSA) NI	ATEX Ex "ec", UKEX Ex "ec"	IECEx Ex "ec", ECAS-Ex Ex "ec"	ABS, BV, LR	DNV	RoHS, UK RoHS, UAE RoHS
Base module	NFBU200	Base module (long)	-20 to +70	2000	X	X	X	X	X	X	X	X	X
	N2BU051	Base module (short, for E2 bus)	-20 to +70		X	X	X	X	X	N.A.	N.A.	N.A.	X
	NFBU050	Base module (short)	-20 to +70		X	X	X	X	X	X	N.A.	N.A.	X
	N2BU030	Base module (compact)	-20 to +70		X	X	X	X	X	N.A.	N.A.	N.A.	X
Power supply module	NFPW441	Power supply module (100 - 120 V AC input)	0 to +55		X	X	–	X	N.A.	N.A.	X	X	X
	NFPW442	Power supply module (220 - 240 V AC input)	0 to +55		X	X	X	N.A.	N.A.	N.A.	X	X	X
	NFPW444	Power supply module (24 V DC input)	-20 to +70 (*6)		X	X	X	X	X	X	X	X	X
CPU module	NFCP501	CPU module for FCN (with 2 Ethernet ports)	-		X	X	X	X	X	X	N.A.	N.A.	X
	-□0□	Standard type	0 to +55										
	-□1□	With Extended Temperature range option	-20 to +70										
	NFCP502	CPU module for FCN (with 4 Ethernet ports)	-		X	X	X	X	X	X	X	X	X
	-□0□	Standard type	0 to +55										
	-□1□	With Extended Temperature range option	-20 to +70										
E2 bus interface module	N2EB100	E2 bus interface module	-20 to +70		X	X	X	X	X	N.A.	X	X	X
SB bus repeat module	NFSB100	SB bus repeat module for FCN	0 to +55		X	X	X	X	X	N.A.	N.A.	N.A.	X
Analog I/O Modules (*1)	NFAI141	Analog Input Module (4 to 20 mA, 16-channel, Non-Isolated)	-20 to +70		X	X	X	XX (*2)	X	X	X	X	X
	NFAV141	Analog Input Module (1 to 5 V: differential input, 16-channel, Non-Isolated)	0 to +55		X	X	X	X	X	N.A.	N.A.	N.A.	X
	NFAI841	Analog I/O Module (4 to 20 mA input, 4 to 20 mA output, 8-channel input /8-channel output, Non-Isolated)	-20 to +70 (*7)		X	X	X	XX (*2)	X	X	X	X	X
	NFAB841	Analog I/O Module (1 to 5 V input: differential input, 4 to 20 mA output, 8-channel input/8-channel output, Non-Isolated)	0 to +55		X	X	X	X	X	N.A.	N.A.	N.A.	X
	NFAI143	Analog Input Module (4 to 20 mA, 16-channel, Isolated)	-20 to +70		X	X	X	X	X	X	X	X	X
	NFAI543	Analog Output Module (4 to 20 mA, 16-channel, Isolated)	-20 to +70 (*7)		X	X	X	X	X	X	X	X	X

All Rights Reserved. Copyright © 2016, Yokogawa Electric Corporation

Table List of FCN's Modules and Compliant Standards, Installation Limitations (2/4)

Type	Model	Function	Installation Limitations		Safety	EMC		Explosion protection			Marine (*10)		Hazardous Substances
			Temperature [°C]	Altitude [m]	CSA, CE, UKCA, EAC, C_{Pr}	CE, UKCA, KC, EAC, C_{Pr}	RCM	US (FM) NI, Canada (CSA) NI	ATEX Ex "ec", UKEX Ex "ec"	IECEx Ex "ec", ECAS-Ex Ex "ec"	ABS, BV, LR	DNV	RoHS, UK RoHS, UAE RoHS
Analog I/O Modules (*1)	NFAV144	Analog Input Module (-10 to +10 V, 16-channel, Isolated)	-20 to +70 (*3)	2000	X	X	X	X	X	N.A.	N.A.	N.A.	X
	NFAV544	Analog Output Module (-10 to +10 V, 16-channel, Isolated)	0 to +55		X	X	X	X	X	N.A.	N.A.	N.A.	X
	NFAT141	TC/mV Input Module (16-channel, Isolated)	0 to +55		X	X	X	X	X	N.A.	N.A.	N.A.	X
	NFAR181	RTD Input Module (12-channel, Isolated)	-		X	X	X	X	X	X	X	X	X
	-S□0 -S□1	Basic type	0 to +55										
	-S□4 -S□5	With Extended Temperature Range option	-20 to +70 (*5)										
	NFAI135	Analog Input Module (4 to 20 mA, 8-channel, Isolated channels)	-20 to +70		X	X	X	X	X	N.A.	X	X	X
	NFAI835	Analog I/O Module (4 to 20 mA, 4-channel input/4-channel output, Isolated channels)	-20 to +70 (*7)		X	X	X	X	X	X	X	X	X
	NFAP135	Pulse Input Module (8-channel, Pulse count, 0 to 10 kHz, Isolated channels)	-		X	X	X	X	X	N.A.	X	X	X
	-S□0 -S□1	Basic type	0 to +55										
	-S□4 -S□5	With Extended Temperature Range option	-20 to +70(*5)										
	NFAF135	Frequency Input Module (8-channel, 0.1 Hz to 10 kHz, Isolated channels)	0 to +55		X	X	X	X	X	N.A.	N.A.	N.A.	X
Digital I/O Modules (*1)	NFDV151	Digital Input Module (32-channel, 24 V DC, Isolated)	-20 to +70		X	X	X	X	X	X	X	X	X
	NFDV161	Digital Input Module (64-channel, 24 V DC)	0 to +55		X	X	X	N.A.	N.A.	N.A.	N.A.	N.A.	X
	NFDV532	Pulse Width Output Module (4-channel : Up Pulse/Down Pulse, 24 V DC, Isolated)	0 to +55		X	X	X	N.A.	N.A.	N.A.	N.A.	N.A.	X
	NFDV551	Digital Output Module (32-channel, 24 V DC, Isolated)	-20 to +70		X	X	X	X	X	X	X	X	X
	NFDV561	Digital Output Module (64-channel, 24 V DC)	0 to +55		X	X	X	N.A.	N.A.	N.A.	N.A.	N.A.	X
	NFDR541 -T□□	Relay Output Module (16-channel, 24 to 125 V DC/100 to 240 V AC, Isolated)	-20 to +70 (*3)(*4)		X	X	X	X	X	N.A.	N.A.	N.A.	X

All Rights Reserved. Copyright © 2016, Yokogawa Electric Corporation

Table List of FCN's Modules and Compliant Standards, Installation Limitations (3/4)

Type	Model	Function	Installation Limitations		Safety	EMC		Explosion protection			Marine (*10)		Hazardous Substances
			Temperature [°C]	Altitude [m]	CSA, CE, UKCA, EAC, C_{Pi}	CE, UKCA, KC, EAC, C_{Pi}	RCM	US (FM) NI, Canada (CSA) NI	ATEX Ex "ec", UKEX Ex "ec"	IECEx Ex "ec", ECAS-Ex Ex "ec"	ABS, BV, LR	DNV	RoHS, UK RoHS, UAE RoHS
Communication Modules	NFLC121	CANopen Communication Module(1-port, 10 kbps to 1 Mbps)	0 to +55	2000	X	X	X	N.A.	N.A.	N.A.	N.A.	N.A.	X
	NFLF111	Foundation fieldbus communication module (4-port)	-		X	X	X	X	X	N.A.	X	X	X
	-S□0 -S□1	Basic type	0 to +55										
	-S□4 -S□5	With Extended Temperature Range option	-20 to +70 (*5)										
	NFLP121	PROFIBUS-DP Communication Module (1-port, 9.6 kbps to 12 Mbps)	0 to +55		X	X	X	N.A.	N.A.	N.A.	X	X	X
	NFLR111	RS-232-C Communication Module (2-port, 300 bps to 115.2 kbps)	0 to +55		X	X	X	X	X	N.A.	X	X	X
	NFLR121	RS-422/RS-485 Communication Module (2-port, 300 bps to 115.2 kbps)	-20 to +70		X	X	X	X	X	N.A.	X	X	X
Pressure Clamp Terminal Block	NFTA4S	Pressure Clamp Terminal Block for Analog (16-channel)	-20 to +70		X	X	X	X	X	X	N.A.	N.A.	X
	NFTT4S	Pressure Clamp Terminal Block for Thermocouple/mV (16-channel)	0 to +55		X	X	X	X	X	N.A.	N.A.	N.A.	X
	NFTR8S	Pressure Clamp Terminal Block for RTD (12-channel)	-20 to +70		X	X	X	X	X	X	N.A.	N.A.	X
	NFTB5S	Pressure Clamp Terminal Block for Digital Input (32-channel)	-20 to +70		X	X	X	X	X	X	N.A.	N.A.	X
	NFTD5S	Pressure Clamp Terminal Block for Digital Output (32-channel)	-20 to +70		X	X	X	X	X	X	N.A.	N.A.	X
	NFTI3S	Pressure Clamp Terminal Block for Isolated Analog Module and Pulse Module (for NFAI135, NFAP135, NFAF135: 8-channel, NFAI835: 4-channel input, 4-channel output)	-20 to +70		X	X	X	X	X	X	N.A.	N.A.	X
	NFTC4S	Pressure Clamp Terminal Block for Digital (16-channel, with dedicated connector, without surge absorber)	0 to +55		X	X	X	X	X	N.A.	N.A.	N.A.	X
	NFTF9S	Pressure Clamp Terminal Block for Foundation Fieldbus	-20 to +70		X	X	X	X	X	N.A.	N.A.	N.A.	X
Terminal Block	TAS40	MIL Connector Terminal Block (40 Pole Plug Types)	-20 to +70		X	X	X	X	X	X	X	X	X
	TAS50	MIL Connector Terminal Block (50 Pole Plug Types)	-20 to +70		X	X	X	X	X	X	X	X	X
Cable	NFCB301	SB Bus Cable	0 to +55		X	X	X	X	X	N.A.	N.A.	N.A.	X
	KMS40	MIL Connector Cable (40 Pole Plug Types)	-20 to +70		X	X	X	X	X	X	X	N.R. (*11)	X
	KMS50	MIL Connector Cable (50 Pole Plug Types)	-20 to +70		X	X	X	X	X	X	X	N.R. (*11)	X

All Rights Reserved. Copyright © 2016, Yokogawa Electric Corporation

Table List of FCN's Modules and Compliant Standards, Installation Limitations (4/4)

Type	Model	Function	Installation Limitations		Safety	EMC		Explosion protection			Marine (*10)		Hazardous Substances
			Temperature [°C]	Altitude [m]	CSA, CE, UKCA, EAC, C_P	CE, UKCA, KC, EAC, C_P	RCM	US (FM) NI, Canada (CSA) NI	ATEX Ex "ec", UKEX Ex "ec"	IECEx Ex "ec", ECAS-Ex Ex "ec"	ABS, BV, LR	DNV	RoHS, UK RoHS, UAE RoHS
SB Bus T-joint	NFSBT01	SB Bus T-joint	0 to +55	2000	X	X	X	X	X	N.A.	N.A.	N.A.	X
	NFSBT02	SB Bus T-joint with Built-in Terminator	0 to +55		X	X	X	X	X	N.A.	N.A.	N.A.	X
Dummy Cover	NFDCV01	Dummy Cover for I/O Module Slot	-20 to +70		X	X	X	X	X	X	X	X	X
	NFDCV02	Dummy Cover for Power supply Module Slot	-20 to +70		X	X	X	X	X	X	X	X	X
	NFCCC01	MIL Cable Connector Cover	-20 to +70		X	X	X	X	X	X	N.A.	N.A.	X

X: Conforming
XX: Conforming conditionally
N.A.: Not applicable
N.R.: Not Relevant
*1: To use modules as hazardous location equipment (non-incendive), use the specified pressure-clamp terminal blocks or MIL connector cables (KMS40, KMS50) / MIL connector terminal blocks (TAS40 and TAS50) .
*2: I/O modules with suffix code "with HART communication" do not conform to the explosion-proof standards.
*3: When ambient temperature is higher than 55°C, a blank slot on one side is required to NFAV144 and NFDR541 modules.
*4: When ambient temperature is higher than 55°C, available channels of NFDR541 are up to eight.
*5: When ambient temperature is higher than 55°C, NFAR181, NFAP135 and NFLF111 modules cannot be installed in next slot of the NFAI841.
*6: When ambient temperature is higher than 55°C, NFPW444 module is restricted to 75% of rated output current.
*7: NFAI841, NFAI543 and NFAI835 modules are restricted to the external load and module installation. Refer to "Table Module Arrangement and Restrictions on Installation."
*10: Please inquire about marine standards conformity to each country/region.
*11: Althouth this cable components does not comply with DNV certification as a cable component, it can be used to build the system for DNV certification.

For details, refer to the following general specifications:

- GS 34P02Q31-01E Analog I/O Modules
- GS 34P02Q35-01E Digital I/O Modules
- GS 34P02Q36-01E Serial Communication Module
- GS 34P02Q55-01E Foundation Fieldbus Communication Module
- GS 34P02Q57-01E PROFIBUS-DP Communication Module
- GS 34P02Q58-01E CANopen Communication Module
- GS 34P02Q04-02E Turbomachinery Controller Overview (FCN-500/FCN-RTU)

All Rights Reserved. Copyright © 2016, Yokogawa Electric Corporation

■ RESTRICTIONS AND PRECAUTIONS ON INSTALLATION

See Installation Guide for “STARDOM FCN/FCJ Installation Guide” (TI 34P02Q91-01E).

● Limitations of Installation for using in the wide temperature range (-20 to +70°C) environments

Main components of FCN (NFCP501/NFCP502–□1□, NFPW444, base modules, N2EB100) can operate in the wide temperature range (-20 to +70°C) environments.

The I/O Modules which are marked up on table “List of FCN’s Modules and Installation Limitations” can operate in the wide temperature range environments.

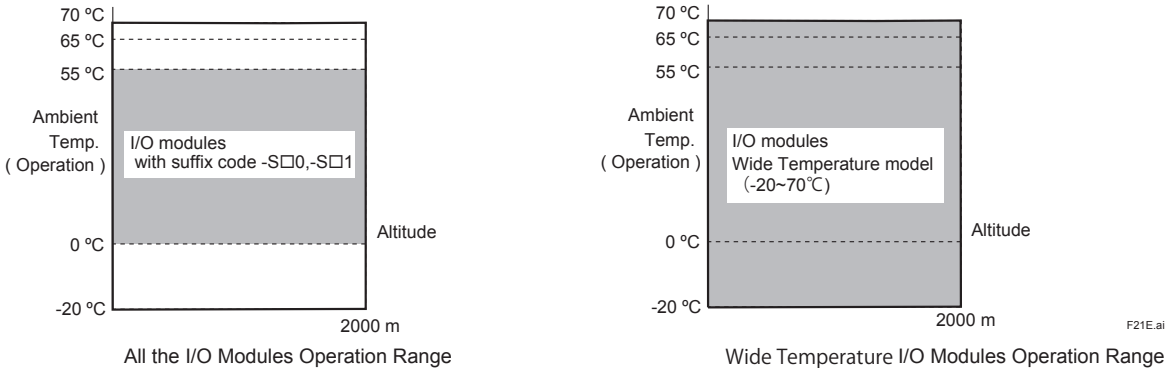

Figure Ambient Temperature and Altitude of I/O modules

● I/O Module Arrangement and Restriction for using ambient temperature is higher than 55°C

Table Module Arrangement and Restrictions on Installation (when ambient temperature is higher than 55°C)

Model	Left-side slot	Right-side slot	Limitations
NFAI841	X (*1)	X (*1)	External load (Analog Output): 200-750Ω
	X	N.A.	
	N.A.	X	
NFAI543	N.A.	N.A.	External load (Analog Output): 0-400Ω
	N.A.	X (*1)	Up to 12 channels External load (Analog Output): 0-400Ω,
NFDR541	X	N.A.	Required a vacant slot on one side Up to 8 channels
	N.A.	X	
NFAI835	X	N.A.	External load (Analog Output): 200-750Ω
	X	X	External load (Analog Output): 200-500Ω
NFAV144	X	N.A.	Required a vacant slot on one side
	N.A.	X	
NFPW444	N.A. or NFPW444	N.A. or NFPW444 / NFCP501/NFCP502	Up to 75% of rated output current

X: Any module (arbitrary) N.A.: Blank or Not allowed
*1: Except NFAI841

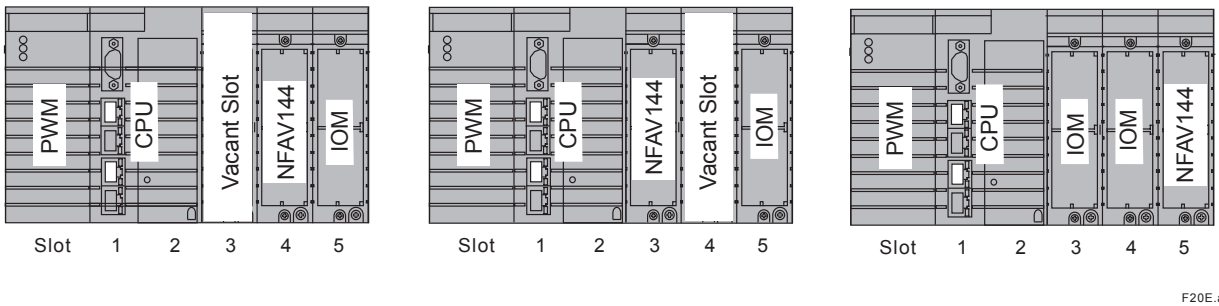

Figure Installation Example of using NFAV144

All Rights Reserved. Copyright © 2016, Yokogawa Electric Corporation

● Pulse Input Module with extend temp. option (NFAP135-S□4, -S□5)'s Ambient Temperature and Limitation of Installations depend on Input Mode

There are some conditions depending on usinginput mode and ambient temperature.

Table Input Mode, Ambient Temp. (operating) and Installation Requirement of NFAP135-S□4, -S□5

Input Mode (*1)		Ambient Temp. [°C]	Installation Requirement
Voltage pulse		-20 to +70	When ambient temperature is higher than 55°C, ensure space on both side (*2)
Dry contact pulse		-20 to +65	When ambient temperature is higher than 55°C, ensure space on both side (*2)
2-wire transmitter current pulse (4 to 20 mA)	with 200 Ω shunt resistance	-20 to +65	When ambient temperature is higher than 55°C, ensure space on both side (*2)
	with 500 Ω shunt resistance	-20 to +55	Ensure space on one side (*2) Or use within 4 points or less
3-wire transmitter voltage pulse		-20 to +65	When ambient temperature is higher than 55°C, ensure space on both side (*2)

*1: Refer to Analog I/O Modules, GS 34P02Q31-01Es
*2: See Figure Installation Examples of using NFAP135

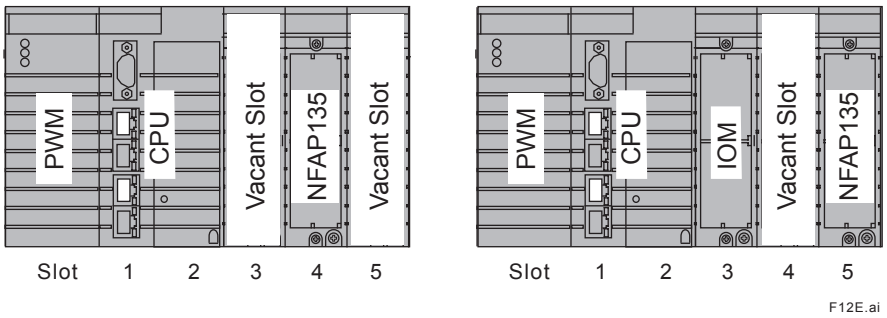

Figure Installation Example of using NFAP135

● Limitations of Installation for NFAT141 (the combination of Thermocouple input and Pressure clamp terminal)

To keep the reference junction compensation accuracy (GS 34P02Q31-01E), make sure to meet the following conditions. The pressure clamp terminal should not be affected by radiated heat.

- Do not install a heat-radiating unit beneath the NFAT141 installed unit.
- Do not install NFAT141 in a place where airflow impinges directly.
- Do not install NFAT141 next to the CPU modules (NFCP501/NFCP502), power supply modules (NFPW44x).
- The installable modules next to the NFAT141 are as follows. When installing other than following I/O modules, make an empty slot (one or more) in each side.
  Installable modules: NFAT141, NFAR181, NFAV141, NFAV144

● Limitations of Installation for Communication Modules

- A total of up to eight NFLR111/NFLR121 can be installed for each FCN-500.
- A total of up to eight NFLF111/NFLC121/NFLP121 (or up to eight duplexed pairs of NFLF111) can be installed for each FCN-500.

● Limitations of Installation for I/O Modules

When you install the following I/O modules, ensure that the required power volume does not exceed the rated power output of the power supply module. For the amount of power supply that each I/O module requires (5 V DC and 24 V DC), refer to the applicable general specifications.

● About Use of N2BU051, NFBU050 or N2BU030

- NFBU050 is dedicated to control unit. It cannot be used as extension unit.
- SB bus repeat module cannot be mounted on N2BU051, NFBU050 or N2BU030.
- E2 bus interface module cannot be mounted on NFBU050.

● Precaution on NFPW426 (Power Supply Module for FCN-RTU)

NFPW426 (Power supply module for FCN-RTU) cannot be used for FCN-500. Only NFPW441, NFPW442 or NFPW444 can be used for FCN-500.

All Rights Reserved. Copyright © 2016, Yokogawa Electric Corporation

■ CABLE SPECIFICATIONS

The following describes the specifications required for the power and grounding cables used. For field signal wiring cables, see “Field Connections” (GS 34P02Q30-01E).

● Applicable Cables

Insulated cables for industrial equipment such as:

- 600 V polyvinyl chloride insulated wires (IV); JIS C3307
- Polyvinyl chloride insulated wires for electrical apparatus (KIV); JIS C3316
- 600 V grade heat-resistant polyvinyl chloride insulated wires (HIV); JIS C3317
- Heatproof vinyl insulated wires VW-1 (UL1015/UL1007)
- Control cables (vinyl insulated vinyl sheath cable) (CVV); JIS C3401

● Recommended Sizes

Power cable: AWG20 to 14 (0.5 to 2 mm^2) with ring tongue terminal
Grounding cable: AWG14 to 13 (2 to 2.6 mm^2) with ring tongue terminal

● Recommended Solderless Terminals

Power cable: Insulated M4 solderless terminals, 8.5 mm wide or less
Grounding cable: Insulated M4 solderless terminal, 8.5 mm wide or less

Follow the specifications required by the M4 solderless terminals used.

■ ORDERING INFORMATION

Specify the model and suffix codes.

■ TRADEMARK ACKNOWLEDGMENTS

The names of corporations, organizations, products and logos herein are either registered trademarks or trademarks of Yokogawa Electric Corporation and their respective holders.

All Rights Reserved. Copyright © 2016, Yokogawa Electric Corporation
Subject to change without notice.