SIEMENS

SIMATIC

S7-400
S7-400 Automation System Module Data

Reference Manual

Preface

General specifications 1

Rack 2

Power supply modules 3

Digital modules 4

Analog modules 5

Interface modules 6

S5 interface IM 463-2 7

PROFIBUS DP master interface IM 467/IM 467 FO 8

Cable duct and fan subassemblies 9

RS 485 repeater 10

Parameter sets of signal modules A

Diagnostic data of signal modules B

Accessories and spare parts C

Directive on handling electrostatic sensitive devices (ESD) D

List of abbreviations E

08/2020
A5E00850736-AJ

Legal information

Warning notice system

This manual contains notices you have to observe in order to ensure your personal safety, as well as to prevent damage to property. The notices referring to your personal safety are highlighted in the manual by a safety alert symbol, notices referring only to property damage have no safety alert symbol. These notices shown below are graded according to the degree of danger.

⚠ DANGER
indicates that death or severe personal injury **will** result if proper precautions are not taken.

⚠ WARNING
indicates that death or severe personal injury **may** result if proper precautions are not taken.

⚠ CAUTION
indicates that minor personal injury can result if proper precautions are not taken.

NOTICE
indicates that property damage can result if proper precautions are not taken.

If more than one degree of danger is present, the warning notice representing the highest degree of danger will be used. A notice warning of injury to persons with a safety alert symbol may also include a warning relating to property damage.

Qualified Personnel

The product/system described in this documentation may be operated only by **personnel qualified** for the specific task in accordance with the relevant documentation, in particular its warning notices and safety instructions. Qualified personnel are those who, based on their training and experience, are capable of identifying risks and avoiding potential hazards when working with these products/systems.

Proper use of Siemens products

Note the following:

⚠ WARNING
Siemens products may only be used for the applications described in the catalog and in the relevant technical documentation. If products and components from other manufacturers are used, these must be recommended or approved by Siemens. Proper transport, storage, installation, assembly, commissioning, operation and maintenance are required to ensure that the products operate safely and without any problems. The permissible ambient conditions must be complied with. The information in the relevant documentation must be observed.

Trademarks

All names identified by ® are registered trademarks of Siemens AG. The remaining trademarks in this publication may be trademarks whose use by third parties for their own purposes could violate the rights of the owner.

Disclaimer of Liability

We have reviewed the contents of this publication to ensure consistency with the hardware and software described. Since variance cannot be precluded entirely, we cannot guarantee full consistency. However, the information in this publication is reviewed regularly and any necessary corrections are included in subsequent editions.

Siemens AG
Division Process Industries and Drives
Postfach 48 48
90026 NÜRNBERG
GERMANY

A5E00850736-AJ
Ⓟ 08/2020 Subject to change

Copyright © Siemens AG 2020.
All rights reserved

Preface

Purpose of this manual

The information contained in this manual can be used as a reference for operating, for descriptions of the functions, and for the specifications of the signal modules, power supply modules and interface modules of the S7-400.

How to configure, assemble and wire these modules in an S7-400 system is described in the installation manuals for each system.

Basic knowledge required

This manual requires general knowledge of automation engineering.

In addition, you are required to know how to use computers or devices with similar functions (e. g. programming devices) under Windows 2000 or XP operating systems. Since S7-400 is configured with the *STEP 7* basic software, you have to have a good working knowledge of the software. You can acquire this knowledge in the manual "*Programming with STEP 7*". Read the notes on the safety of electronic controllers in the appendix of the Installation manual – especially when using an S7-400 in safety-relevant areas.

Target group

This manual is aimed at people with the required qualifications to commission, operate and maintain the products described.

Scope of the manual

The manual applies to the S7-400 automation system.

Changes compared to the previous version

The following changes have been made compared to the previous version of this manual S7-400 Automation System; Module Specifications, Edition 05/2007 (A5E00850735-04):

The revision of the ATEX standard was taken into consideration in chapter Standards, certificates and approvals (Page 13).

Approvals

You can find details on the certificates and approvals in the chapter General specifications (Page 13)"General specifications."

Position in the information landscape

This manual forms part of the S7-400 documentation.

System	Documentation package
S7-400	• *S7-400 automation system, installation* • *S7-400 automation system, module specifications* • *S7-400 automation system, CPU specifications* • *S7-400 instruction list*

Further Information

You can find further and additional information on the topics in this manual in the following manuals:

Programming with STEP 7 (http://support.automation.siemens.com/WW/view/en/18652056)

Configuring Hardware and Communication Connections with STEP 7 (http://support.automation.siemens.com/WW/view/en/18652631)

System and Standard Functions (http://support.automation.siemens.com/WW/view/en/1214574)

PROFINET system description (http://support.automation.siemens.com/WW/view/en/19292127)

Isochrone mode (http://support.automation.siemens.com/WW/view/en/15218045)

Recycling and disposal

The S7-400 is environmentally friendly and is thus recyclable. For environmentally compliant recycling and disposal of your discarded device, please contact a company certified for the disposal of electronic waste.

Additional support

If you have any questions relating to the products described in this manual and cannot find the answers in this documentation, please contact your Siemens partner at the appropriate office or sales and service location.

You will find information on who to contact at:

Contact partners (http://www.siemens.com/automation/partner)

A guide to the technical documents for the various SIMATIC products and systems is available at:

Documentation (http://www.automation.siemens.com/simatic/portal/html_76/techdoku.htm)

You can find the online catalog and order system under:

Catalog (http://mall.automation.siemens.com/)

Training center

We offer a range of relevant courses to help you to get started with the SIMATIC S7 automation system. Please contact your regional training center or our central training center in 90327 Nuremberg, Germany for details:

Training (http://www.sitrain.com/index_en.html)

Technical support

You can contact Technical Support for all Industry Automation products using the Web form for Support Request
Support Request (http://www.siemens.de/automation/support-request)

Additional information about our technical support is available on the Internet at
Technical Support (http://support.automation.siemens.com)

Service & Support on the Internet

In addition to our documentation, we offer a comprehensive knowledge base online on the Internet at:

Service & Support (http://www.siemens.com/automation/service&support)

There you will find:

- Our newsletter containing up-to-date information on your products.
- The latest documents via our search function in Service & Support.
- An international forum where users and specialists can exchange their experiences.
- Your local contact partner for automation and drive technology in our contacts database.
- Information about on-site service, repairs and spare parts. Much more can be found under "Services".
- Applications and tools for optimizing operations with SIMATIC S7. Performance measurements for DP and PN, for example, are also published here.

Security information

Siemens provides products and solutions with industrial security functions that support the secure operation of plants, systems, machines, and networks.

In order to protect plants, systems, machines and networks against cyber threats, it is necessary to implement – and continuously maintain – a holistic, state-of-the-art industrial security concept. Siemens' products and solutions form one element of such a concept.

Customers are responsible for preventing unauthorized access to their plants, systems, machines and networks. These systems, machines and components should only be connected to the enterprise network or the Internet if and only to the extent necessary and with appropriate security measures (firewalls and/or network segmentation) in place.

You can find more information on protective measures in the area of industrial security by visiting:
https://www.siemens.com/industrialsecurity.

Siemens' products and solutions undergo continuous development to make them more secure. Siemens strongly recommends performing product updates as soon as they are available and using only the latest product versions. Use of product versions that are no longer supported, and failure to apply latest updates may increase customer's exposure to cyber threats.

To stay informed about product updates, subscribe to the Siemens Industrial Security RSS Feed under
https://www.siemens.com/industrialsecurity.

Table of contents

Preface **3**

1 General specifications **13**

1.1 Standards, certificates and approvals 13

1.2 Electromagnetic compatibility 20

1.3 Shipping and storage conditions for modules and backup batteries 23

1.4 Mechanical and ambient conditions for S7-400 operation 24

1.5 Information on insulation tests, protection class and degree of protection 26

2 Rack **27**

2.1 Function and design of the racks 27

2.2 The racks UR1 (6ES7400-1TAx1-0AA0) and UR2 (6ES7400-1JAx1-0AA0) 29

2.3 UR2-H Rack 6ES7400-2JAx0-0AA0) 31

2.4 Rack CR2 (6ES7401-2TA01-0AA0) 33

2.5 Rack CR3 (6ES7401-1DA01-0AA0) 34

2.6 Racks ER1 (6ES7403-1TAx1-0AA0) and ER2 (6ES7403-1JAx1-0AA0) 35

3 Power supply modules **37**

3.1 Common characteristics of the power supply modules 37

3.2 Redundant power supply modules 39

3.3 Backup battery (option) 41

3.4 Operator controls and indicators 43

3.5 Fault/Error messages via LEDs 46

3.6 Power supply module PS 407 4A (6ES7407-0DA01-0AA0) 52

3.7 Power supply module PS 407 4A (6ES7407-0DA02-0AA0) 55

3.8 Power supply modules PS 407 10A (6ES7407-0KA01-0AA0) and PS 10A R (6ES7407-0KR00-0AA0) 58

3.9 Power supply modules PS 407 10A (6ES7407-0KA02-0AA0) and PS 10A R (6ES7407-0KR02-0AA0) 61

3.10 Power supply module PS 407 20A (6ES7407-0RA01-0AA0) 64

3.11 Power supply module PS 407 20A (6ES7407-0RA02-0AA0) 66

3.12 Power supply module PS 405 4A (6ES7405-0DA01-0AA0) 68

3.13 Power supply module PS 405 4A (6ES7405-0DA02-0AA0) 70

3.14 Power supply modules PS 405 10A (6ES7405-0KA01-0AA0) and PS 405 10A R (405-0KR00-0AA0) 72

3.15 Power supply modules PS 405 10A (6ES7405-0KA02-0AA0) and PS 405 10A R (405-0KR02-0AA0) ... 74

3.16 Power supply module PS 405 20A (6ES7405-0RA01-0AA0) ... 76

3.17 Power supply module PS 405 20A (6ES7405-0RA02-0AA0) ... 78

4 Digital modules ... 81

4.1 Module overview ... 81

4.2 Steps in selecting and commissioning the digital module ... 83

4.3 Assigning parameters to digital modules ... 83
4.3.1 Parameters ... 83
4.3.2 Parameters of digital input modules ... 85
4.3.3 Parameters of digital output modules ... 86

4.4 Diagnostics for digital modules ... 86
4.4.1 General information about diagnostic messages ... 86
4.4.2 Diagnostic messages of the digital modules ... 88
4.4.3 Causes of errors and remedies for digital modules ... 89

4.5 Interrupts of the digital modules ... 91

4.6 Input characteristic curve for digital inputs ... 93

4.7 Digital input module SM 421; DI 32 x DC 24 V (6ES7421-1BL01-0AA0) ... 95

4.8 Digital input module SM 421; DI 16 x DC 24 V (6ES7421-7BH01-0AB0) ... 98
4.8.1 Features ... 98
4.8.2 Assigning parameters to the SM 421; DI 16 x DC 24 V ... 103
4.8.3 Behavior of the SM 421; DI 16 x DC 24 V ... 105

4.9 Digital input module SM 421; DI 16 x AC 120 V (6ES7421-5EH00-0AA0) ... 107

4.10 Digital input module SM 421; DI 16 x UC 24/60 V (6ES7421-7DH00-0AB0) ... 110
4.10.1 Features ... 110
4.10.2 Assigning parameters to the SM 421; DI 16 x UC 24/60 V ... 114

4.11 Digital input module SM 421; DI 16 x UC 120/230 V (6ES7 421-1FH00-0AA0) ... 117

4.12 Digital input module SM 421; DI 16 x UC 120/230 V (6ES7421-1FH20-0AA0) ... 120

4.13 Digital input module SM 421; DI 32xUC 120 V (6ES7421-1EL00-0AA0) ... 124

4.14 Digital output module SM 422; DO 16 x DC 24 V/2 A; (6ES7422-1BH11-0AA0) ... 127

4.15 Digital output module SM 422; DO 16 x DC 20-125 V/1.5 A (6ES7422-5EH10-0AB0) ... 130
4.15.1 Features ... 130
4.15.2 Assigning parameters to the SM 422; DO 16 x DC 20-125 V/1.5 A ... 134

4.16 Digital output module SM 422; DO 32 x DC 24 V/0.5 A (6ES7422-1BL00-0AA0) ... 135

4.17 Digital output module SM 422; DO 32 x DC 24 V/0.5 A (6ES7422-7BL00-0AB0) ... 138
4.17.1 Features ... 138
4.17.2 Assigning parameters to the SM 422; DO 32 x DC 24 V/0.5 A ... 142
4.17.3 Behavior of the SM 422; DO 32 x DC 24 V/0.5 A ... 143

4.18 Digital output module SM 422; DO 8 x AC 120/230 V/5 A (6ES7422-1FF00-0AA0) ... 143

4.19 Digital output module SM 422; DO 16 x AC 120/230 V/2 A (6ES7422-1FF00-0AA0) ... 147

4.20 Digital output module SM 422; DO 16 x AC 20-120 V/2 A (6ES7422-5EH00-0AB0) 151
4.20.1 Features 151
4.20.2 Assigning parameters to the SM 422; DO 16 x AC 20-120 V/2 A 155
4.21 Relay output module SM 422; DO 16 x UC 30/230 V/Rel. 5 A (6ES7422-1HH00-0AA0)..... 156

5 Analog modules 161

5.1 General information 161
5.2 Module overview 162
5.3 Steps for commissioning analog modules 164
5.4 Representation of analog values 164
5.4.1 General information 164
5.4.2 Representation of analog values of analog input channels 166
5.4.3 Binary representation of input ranges 167
5.4.4 Representation of analog values in voltage measuring ranges 169
5.4.5 Representation of analog values in the current measuring ranges 171
5.4.6 Representation of analog values for resistance-type sensors 173
5.4.7 Representation of analog values for resistance thermometer 174
5.4.8 Representation of analog values for thermocouples 177
5.4.9 Representation of analog values for analog output channels 182
5.5 Setting the measuring method and ranges of analog input channels 186
5.6 Behavior of the analog modules 189
5.6.1 Introduction 189
5.6.2 Effect of supply voltage and operating mode 190
5.6.3 Effect of the value range for analog values 191
5.6.4 Effect of operational limit and basic error limit 192
5.7 Conversion, cycle, settling and response time of analog modules 193
5.8 Assigning parameters to analog modules 196
5.8.1 General information about parameter assignment 196
5.8.2 Parameters of analog input modules 198
5.8.3 Parameters of analog output modules 200
5.9 Connecting sensors to analog inputs 201
5.10 Connecting voltage sensors 204
5.11 Connecting current sensors 205
5.12 Connecting resistance thermometers and resistors 208
5.13 Connecting thermocouples 210
5.14 Connecting loads/actuators to analog outputs 214
5.15 Connecting loads/actuators to voltage outputs 215
5.16 Connecting loads/actuators to current outputs 217
5.17 Diagnostics functions of analog modules 218
5.18 Interrupts of analog modules 222
5.19 Analog input module SM 431; AI 8 x 13 Bit (6ES7431-1KF00-0AB0) 224
5.19.1 Features 224

5.19.2 Commissioning the SM 431; AI 8 x 13 Bit 230
5.19.3 Measuring methods and measuring ranges of SM 431; AI 8 x 13 Bit 231

5.20 Analog input module SM 431; AI 8 x 14 Bit (6ES7431-1KF10-0AB0) 232
5.20.1 Features 232
5.20.2 Commissioning the SM 431; AI 8 x 14 Bit 242
5.20.3 Measuring methods and measuring ranges of SM 431; AI 8 x 14 Bit 244

5.21 Analog input module SM 431; AI 8 x 14 Bit (6ES7431-1KF20-0AB0) 248
5.21.1 Features 248
5.21.2 Commissioning the SM 431; AI 8 x 14 Bit 254
5.21.3 Measuring methods and measuring ranges of SM 431; AI 8 x 14 Bit 257

5.22 Analog input module SM 431; AI 16 x 13 Bit (6ES7431-0HH00-0AB0) 259
5.22.1 Features 259
5.22.2 Commissioning the SM 431; AI 16 x 13 Bit 265
5.22.3 Measuring methods and measuring ranges of SM 431; AI 16 x 13 Bit 266

5.23 Analog input module SM 431; AI 16 x 16 Bit (6ES7431-7QH00-0AB0) 268
5.23.1 Features 268
5.23.2 Commissioning the SM 431; AI 16 x 16 Bit 279
5.23.3 Measuring methods and measuring ranges of SM 431; AI 16 x 16 Bit 283

5.24 Analog input module SM 431; AI 8 x RTD x 16 Bit (6ES7431-7KF10-0AB0) 287
5.24.1 Features 287
5.24.2 Commissioning the SM 431; AI 8 x RTD x 16 Bit 294
5.24.3 Measuring methods and measuring ranges of the SM 431; AI 8 x RTD x 16 Bit 297

5.25 Analog input module SM 431; AI 8 x 16 Bit (6ES7431-7KF00-0AB0) 298
5.25.1 Features 298
5.25.2 Commissioning the SM 431; AI 8 x 16 Bit 305
5.25.3 Measuring methods and measuring ranges of SM 431; AI 8 x 16 Bit 310

5.26 Analog output module SM 432; AO 8 x 13 Bit (6ES7432-1HF00-0AB0) 311
5.26.1 Features 311
5.26.2 Commissioning the SM 432; AO 8 x 13 Bit 317
5.26.3 Output ranges of the SM 432; AO 8 x 13 Bit 318

6 Interface modules 319

6.1 Common features of the interface modules 319

6.2 Interface modules IM 460-0 (6ES7 460-0AA01-0AB0) and IM 461-0 (6ES7 461-0AA01-0AA0) 324

6.3 Interface modules IM 460-1 (6ES7460-1BA01-0AB0) and IM 461-1 (6ES7461-1BA01-0AA0) 327

6.4 Interface modules IM 460-3 (6ES7460-3AA01-0AB0) and IM 461-3 (6ES7461-3AA01-0AA0) 331

6.5 Interface modules IM 460-4; (6ES7460-4AA01-0AB0) and IM 461-4; (6ES7461-4AA01-0AA0) 334

7 S5 interface IM 463-2 339

7.1 Using SIMATIC S5 expansion units in an S7-400 339

7.2 Rules for connecting S5 expansion units 341

7.3 Operator controls and indicators 342

7.4 Installing and connecting the IM 463-2 ... 344
7.5 Setting the operating modes of the IM 314 ... 346
7.6 Configuring S5 modules for operation in the S7-400 ... 349
7.7 Pin assignments of the 721 cable ... 351
7.8 Terminating connector for IM 314 ... 353
7.9 Specifications IM463-2 (6ES7463-2AA00-0AA0) ... 355

8 PROFIBUS DP master interface IM 467/IM 467 FO ... 357

8.1 PROFIBUS DP master interface IM 467/IM 467 FO ... 357
8.1.1 Overview ... 357
8.1.2 Indicators and the mode selector ... 360
8.2 Configuration ... 362
8.3 Connection to PROFIBUS DP ... 362
8.3.1 Connection options ... 362
8.3.2 Bus connector ... 363
8.3.3 Optical connection to PROFIBUS DP ... 365
8.3.4 Connecting a fiber-optic cable to the IM 467 FO ... 366
8.4 Specifications ... 368
8.4.1 Specifications of the IM 467 (6ES7467-5GJ02-0AB0)) ... 368
8.4.2 Specifications of the IM 467 FO (6ES7467-5FJ00-0AB0) ... 370

9 Cable duct and fan subassemblies ... 371

9.1 Features ... 371
9.2 Fan monitoring in the fan subassemblies ... 372
9.3 Cable duct (6ES7408-0TA00-0AA0) ... 374
9.4 The 120/230 VAC fan subassembly (6ES7408-1TB00-0XA0) ... 375
9.5 The 24 V DC fan subassembly (6ES7408-1TA01-0XA0) ... 378

10 RS 485 repeater ... 381

10.1 Introduction ... 381
10.2 Applications and features (6ES7972-0AA01-0XA0) ... 382
10.3 Design of the RS 485 repeater (6ES7972-0AA01-0XA0) ... 383
10.4 RS 485 repeater in ungrounded and grounded operation ... 384
10.5 Specifications ... 386

A Parameter sets of signal modules ... 389

A.1 How to assign the parameters for signal modules in the user program ... 389
A.2 Parameters of digital input modules ... 391
A.3 Parameters of digital output modules ... 394
A.4 Parameters of analog input modules ... 397

B Diagnostic data of signal modules ... 399
B.1 Evaluating diagnostic data of signal modules in the user program ... 399
B.2 Structure and contents of diagnostic data bytes 0 and 1 ... 400
B.3 Diagnostic data of the digital input modules as of byte 2 ... 401
B.4 Diagnostic data of the digital output modules as of byte 2 ... 406
B.5 Diagnostic data of the analog input modules as of byte 2 ... 413
C Accessories and spare parts ... 421
C.1 Accessories and spare parts ... 421
D Directive on handling electrostatic sensitive devices (ESD) ... 425
D.1 ESD: What are the directives for handling electrostatic sensitive devices? ... 425
D.2 Electrostatic charging of persons ... 426
D.3 Basic protective measures against electrostatic discharge ... 427
E List of abbreviations ... 429
E.1 List of abbreviations ... 429
Glossary ... 433
Index ... 447

General specifications 1

1.1 Standards, certificates and approvals

Information on the type plate

Note

You will find the current approvals on the type plate of the respective product.

WARNING

Open Equipment

Death, serious injury or substantial material damage can occur.

S7 400 modules are classified as open equipment, This means that the S7 400 should only be installed in an enclosure or cabinet.

Access to the enclosures or cabinets should only be possible with a key or with a tool, and access should only be permitted for trained or approved personnel.

IEC 61131-2

The S7-400 automation system meets the requirements and criteria of standard IEC 61131-2 (Programmable Controllers, Part 2: Equipment Requirements and Tests.)

CE marking

Our products meet the requirements and protective objectives of the following EU Directives and comply with the corresponding European standards (EN):

- Directive **2014/35/EU** of the European Parliament and of the Council of 26 February 2014 on the harmonization of the laws of the Member States relating to the making available on the market of electrical equipment designed for use within certain voltage limits (Low Voltage Directive)
- Directive **2014/30/EU** of the European Parliament and of the Council of 26 February 2014 on the harmonization of the laws of the Member States relating to electromagnetic compatibility (EMC Directive)
- Directive **2014/34/EU** of the European Parliament and of the Council of 26 February 2014 on the harmonisation of the laws of the Member States relating to equipment and protective systems intended for use in potentially explosive atmospheres (ATEX Directive)

The EC Declaration of Conformity can be downloaded from the Customer Support Internet pages (keyword "declaration of conformity").

EMC directive

SIMATIC products are designed for industrial applications.

Table 1-1 Use in industry

Area of application	Noise emission requirements	Noise immunity requirements
Industry	EN 61000-6-4: 2001 + A1:2011	EN 61000-6-2: 2005

Low voltage directive

The products in the following table meet the requirements of EU Directive 2014/35/EU "Low Voltage Directive". Compliance with this EU directive has been checked in accordance with DIN EN 61131-2 (corresponds to IEC 61131-2).

Table 1-2 Products that fulfill the requirements of the low-voltage directive

Name	Order number
Digital input module SM 421;DI 32 x UC 120 V	6ES7 421-1EL00-0AA0
Digital input module SM 421;DI 16 x UC 120/230 V	6ES7 421-1FH00-0AA0
Digital output module SM 422;DO 8 x AC 120/230 V/5A	6ES7 422-1FF00-0AA0
Digital output module SM 422;DO 16 x AC 120/230 V/2A	6ES7 422-1FH00-0AB0
Relay output module SM 422;DO 16 x UC30/230 V/Rel5A	6ES7 422-1HH00-0AA0
Digital input module SM 421;DI 16 x UC 120/230 V	6ES7421-1FH20-0AA0
The 120/230 VAC fan subassembly	6ES7 408-1TB00-0XA0
PS 407 4A	6ES7 407-0DA01-0AA0 6ES7 407-0DA02-0AA0
PS 407 10A	6ES7 407-0KA01-0AA0 6ES7 407-0KA02-0AA0
PS 407 20A	6ES7 407-0RA01-0AA0 6ES7 407-0RA02-0AA0
PS 407 10A R	6ES7 407-0KR00-0AA0 6ES7 407-0KR02-0AA0

Note

In the new releases, some of the devices listed above fulfill the requirements of the explosion protection guidelines instead of those of the low-voltage directive. Please note the information on the type plate.

ATEX Directive

In accordance with EN 60079-15 (Electrical Apparatus for Potentially Explosive Atmospheres; Type of Protection "n") and EN 60079-0 (Electrical apparatus for explosive gas atmospheres - Part 0: General requirements)

Ex II 3 G Ex nA IIC T4..T6 Gc

Marking for Australia and New Zealand

Our products meet the requirements of standard EN 61000-6-4.

cULus approval

Note

The marks on the rating plate indicate which cULus approvals have been issued for your product.

Underwriters Laboratories Inc., complying with

- UL 508 (Industrial Control Equipment)
- CSA C22.2 No. 142 (Process Control Equipment)

or cULus approval, Hazardous Location

HAZ. LOC.

CULUS Listed E248953 INT. CONT. EQ. FOR HAZ. LOC.

Underwriters Laboratories Inc., complying with

- UL 508 (Industrial Control Equipment)
- CSA C22.2 No. 142 (Process Control Equipment)
- ISA 12.12.01 (Hazardous Location)
- CSA-213 (Hazardous Location)

APPROVED for Use in

- Cl. 1, Div. 2, GP. A, B, C, D T4A
- Cl. 1, Zone 2, GP. IIC T4

Note the following information.

or cULus Approvals, Hazardous Location for Relay Modules

HAZ. LOC.

CULUS Listed E223122 INT. CONT. EQ. FOR HAZ. LOC.

Underwriters Laboratories Inc., complying with

- UL 508 (Industrial Control Equipment)
- CSA C22.2 No. 142 (Process Control Equipment)
- UL 1604 (Hazardous Location)
- CSA-213 (Hazardous Location)

APPROVED for Use in

- Cl. 1, Div. 2, GP. A, B, C, D T4A
- Cl. 1, Zone 2, GP. IIC T4
- Cl. 1, Zone 2, AEx nC IIC T4

Note the following information.

Note

This product must be installed according to the NEC (National Electric Code) stipulations.

When used in environments according to class I, division 2 (see above), S7-400 must be mounted in an enclosure that corresponds to at least IP54 according to EN 60529.

You can find information about the use of S7-400 in hazardous areas of zone 2 in a separate document, which is included in this documentation package.

WARNING

Installation Instructions according cULus

WARNING – Explosion Hazard - Do not disconnect while circuit is live unless area is known to be non-hazardous.

WARNING – Explosion Hazard - Substitution of components may impair suitability for Class I, Division 2 or Class I, Zone 2

This equipment is suitable for use in Class I, Division 2, Groups A, B, C or D; Class I, Zone 2, Group IIC, or non-hazardous locations only.

CuULu requirements for hazardous location on the battery power supply for CPUs

The backup voltage for a CPU must be supplied over a non-incendive plug connection. The figure below shows such a plug connection.

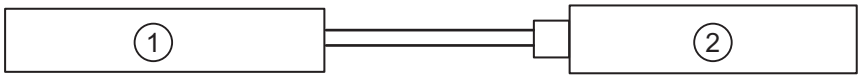

(1) Battery or supply voltage

(2) CPU with "Ext. Batt." connector

Figure 1-1 Back-up voltage supply

The following conditions apply to the performance characteristics of this connection:

Voc (no load voltage) = 15 V	Vmax = 15 V
Isc (short-circuit current)= 50 mA	Imax = 50 mA
Ca = Battery/voltage supply capacity	Ci = 25 nF maximum
La = Battery/voltage supply inductance	Li = 2 mH maximum

The battery/power supply that powers the non-incendive connection must comply with the following ratings:

Battery/Power supply		CPU input "Ext. Batt." with cable
Voc	≤	Vmax (15 V)
Isc	≤	Imax (50 mA)
Ca	≥	Ci + Cc (25 nF + Cc)
La	≥	Li + Lc (2 mH + Lc)
Cc = Cable capacity Lc = Cable inductance		

Note

If you do not know the capacity and inductance of the cable, you can use the following values:

Cc = 197 pF/m (60 pF/ft.), Lc = 0.66 mH/m (0.2 mH/ft)

Example

The Varta 4022 battery together with a 1.5 m long cable and a Leonhardy 02-02.1500 plug meet these conditions.

FM Approval

Factory Mutual Approval Standard Class Number 3611, Class I, Division 2, Group A, B, C, D.

Temperature class: T4 at 60° C ambient temperature

WARNING

Personal injury or property damage can result.

In hazardous areas, personal injury or property damage can result if you create or break an electrical circuit during operation of an S7-400 (for example, by means of plug-in connections, fuses, switches).

Do not create or break live electrical circuits unless you are certain there is no danger of explosion.

When used in FM conditions, the S7-400 must be fitted in an enclosure that corresponds to at least IP54 in accordance with EN 60529.

NEC (National Electric Code) and CEC (Canadian Electric Code) requirements for Hazardous Locations for battery power supply for CPUs

The backup voltage for a CPU must be supplied over a non-incendive plug connection. The figure below shows such a plug connection.

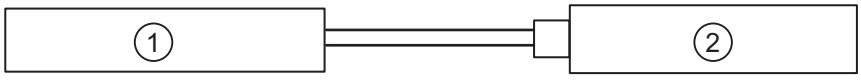

(1) Battery or supply voltage

(2) CPU with "Ext. Batt." connector

Figure 1-2 Back-up voltage supply

The following conditions apply to the performance characteristics of this connection:

Voc (no load voltage) = 15 V	Vmax = 15 V
Isc (short-circuit current)= 50 mA	Imax = 50 mA
Ca = Battery/voltage supply capacity	Ci = 25 nF maximum
La = Battery/voltage supply inductance	Li = 2 mH maximum

The battery/power supply that powers the non-incendive connection must comply with the following ratings:

Battery/power supply		CPU input "Ext. Batt." with cable
Voc	≤	Vmax (15 V)
Isc	≤	Imax (50 mA)
Ca	≥	Ci + Cc (25 nF + Cc)
La	≥	Li + Lc (2 mH + Lc)
Cc = Cable capacity Lc = Cable inductance		

Note

The concept of non-incendive field wiring allows the interconnection of devices with non-incendive field wiring using any wiring method approved for unclassified sites.

If you do not know the capacity and inductance of the cable, you can use the following values:

Cc = 197 pF/m (60 pF/ft.), Lc = 0.66 mH/m (0.2 mH/ft)

Marine Approvals

Classification societies:

- ABS (American Bureau of Shipping)
- BV (Bureau Veritas)
- DNV (Det Norske Veritas)
- GL (Germanischer Lloyd)
- LRS (Lloyds Register of Shipping)
- Class NK (Nippon Kaiji Kyokai)

Safety requirements for installation

The S7-400 automation system is "open-type equipment" in accordance with standard IEC 61131-2 and therefore EU Directive 2014/35/EU (Low Voltage Directive), and "open type" in accordance with UL/CSA certification.

To fulfill requirements for safe operation with regard to mechanical stability, flame retardation, stability, and shock-hazard protection, the following alternative types of installation are specified:

- Installation in a suitable cabinet
- Installation in a suitable housing
- Installation in a suitably equipped, enclosed operating area.

1.2 Electromagnetic compatibility

Introduction

This section provides details of the immunity of S7-400 modules and information on RFI suppression.

All components of the S7-400 automation system meet the requirement of the standards applicable in Europe provided the system is installed in accordance with all applicable regulations (see *Installation manual, sections 2 and 4*).

"EMC" definition

Electromagnetic compatibility (EMC) is the ability of an electrical device or system to operate satisfactorily in its electromagnetic environment without affecting that environment.

WARNING

Personal injury or property damage can result.

Installing expansions that are not approved for the S7-400 can breach the requirements and regulations governing safety and electromagnetic compatibility.

Only use expansions that are approved for the system.

Pulse-shaped interference

The table below shows the electromagnetic compatibility of the modules with pulse shaped interference. The system S7-400 system must meet the requirements and guidelines for electrical assembly.

Table 1-3 Pulse-shaped interference

Pulse-shaped interference	Test voltage		Corresponds to immunity test level
Electrostatic discharge in accordance with IEC 61000-4-2	Air discharge: Contact discharge:	±8 kV ±6 kV	3
Burst (electrical fast transient) in accordance with IEC 61000-4-4	2 kV (power supply line) 2 kV (signal line >30 m) 1 kV (signal line <30 m)		3

Pulse-shaped interference	Test voltage	Corresponds to immunity test level
Surge in accordance with IEC 61000-4-5		3
• Asymmetrical connection	2 kV (supply line) DC with protective components 2 kV (signal line/data line only > 30 m), where applicable with protective components	
• Symmetrical connection	1 kV (supply line) DC with protective components 1 kV (signal line only > 30 m), where applicable with protective components	

Sinusoidal interference

The table below shows S7-400 module EMC for sinusoidal interference.

Table 1-4 Sinusoidal interference

Sinusoidal interference	Test values	Corresponds to immunity test level
High frequency radiation (electromagnetic fields) in accordance with IEC 61000-4-3	80 MHz to 1 GHz and 1.4 GHz to 2 GHz 10 V/m with 80 % amplitude modulation at 1 kHz 2 GHz to 2.7 GHz 3 V/m with 80 % amplitude modulation at 1 kHz	3
HF currents on cables and cable shielding in accordance with IEC 61000-4-6	Test voltage 10 V with 80 % amplitude modulation of 1 kHz in a range of 10 kHz to 80 MHz	3

Emission of radio frequency interference

Emissions from electromagnetic fields in accordance with EN 61000-6-4.

Emissions over main AC supply in accordance with 61000-6-4.

Line harmonics

The AC power modules for S7-400 comply with the following standards for line harmonics:

Harmonic current: EN 61000-3-2

Voltage supply fluctuations and flicker: EN 61000-3-3

Additional measures

If you want to connect an S7-400 system to the public network, you must ensure compliance with **class B pursuant to EN 55032.**

Appropriate additional measures are to be taken if you need to increase the immunity of the system in the light of high external interference.

1.3 Shipping and storage conditions for modules and backup batteries

Shipping and storage of modules

S7-400 modules surpass the requirements of IEC 61131-2 with respect to shipping and storage requirements. The following details apply to modules shipped and/or stored in their original packing.

Climatic conditions correspond to IEC 60721-3-3, Class 3K7 for storage and IEC 60721-3-2, Class 2K4 for transportation.

Mechanical conditions are compliant with IEC 60721-3-2, Class 2M2.

Table 1-5 Shipping and storage conditions for modules

	Permissible range
Free fall	≤ 1m (to 10 kg)
Temperature	-40 to +70° C
Barometric pressure	1080 to 660 hPa (corresponds to an elevation of -1000 to 3500 m)
Relative humidity (at +25° C)	5 to 95%, without condensation
Sinusoidal vibration in accordance with IEC 60068-2-6	5 - 9 Hz: 3.5 mm 9 - 500 Hz: 9.8 m/s^2
Shock in accordance with IEC 60068-2-29	250 m/s^2, 6 ms, 1000 shocks

Shipment of backup batteries

Backup batteries should always be shipped in their original package. No special measures are required for the transport of the backup batteries used in the S7-400 system. The lithium component of the backup battery is less than 0.5 g.

Storing backup batteries

Always store backup batteries in a cool and dry place. The batteries have a maximum shelf life of 10 years.

WARNING

Risk of injury, material damage, release of hazardous substances.

Lithium batteries can explode if handled improperly. Their improper disposal may result in the release of hazardous substances. Strictly adhere to the following instructions:

Do not throw a new or low battery into an open fire and do not perform any soldering work on the cell casing (max. temperature 100° C). Do not recharge the battery - risk of explosion! Do not open a battery. Replace a faulty battery only with the same type. Replacement batteries can be ordered from SIEMENS (for order numbers, refer to the "*Module Specifications*" *reference manual*, in Appendix C (Page 421)).

Always try to return low batteries to the manufacturer or deliver these to a registered recycling company.

1.4 Mechanical and ambient conditions for S7-400 operation

Operating conditions

S7-400 systems are designed for stationary use in weather-proof locations. The S7-400 fulfills the requirements for use in accordance with IEC 60721-3-3:

- Class 3M3 (mechanical requirements)
- Class 3K3 (climatic ambient conditions)

Use with additional measures

The S7-400 may **not** be used under the conditions outlined below without taking additional measures:

- at locations with a high degree of ionizing radiation
- in aggressive environments caused, for example, by
  - the development of dust
  - corrosive vapors or gases
  - strong electric or magnetic fields
- in installations requiring special monitoring, for example
  - elevators
  - electrical plants in potentially hazardous areas

An additional measure would be to install the S7-400 in a cabinet or housing.

Mechanical ambient conditions

The mechanical ambient conditions for S7-400 modules are listed in the following table in the form of sinusoidal vibrations.

Table 1-6 Mechanical ambient conditions

Frequency range in Hz	Test values
10 ≤ f < 58	0.075 mm amplitude
58 ≤ f < 500	1 g constant acceleration

Reducing vibrations

If your S7-400 modules are exposed to severe shock or vibration, take appropriate measures to reduce acceleration or the amplitude.

We recommend the installation of the S7-400 on damping materials (for example, rubber-metal vibration dampers.)

Testing mechanical ambient conditions

The table below provides important information with respect to the type and scope of testing of mechanical ambient conditions.

Table 1-7 Test for mechanical ambient conditions

Condition tested	Test standard	Remarks
Vibrations	Vibration test in accordance with IEC 60068-2-6 (sinusoidal)	Type of vibration: frequency sweeps with a rate of change of 1 octave/minute. 10 Hz ≤ f < 58 Hz, constant amplitude 0.075 mm 58 Hz ≤ f < 500 Hz, constant acceleration 1 g Duration of vibration: 10 frequency sweeps per axis in each of three axes perpendicular to each other.
Shock	Shock test in accordance with IEC 60068-2-29	Type of shock: half-sine Severity of shock: 10 g peak value, 6 ms duration Direction of shock: 100 shocks in each of the 3 axes arranged vertically to each other.

Climatic ambient conditions

The S7-400 may be operated under the following climatic ambient conditions:

Table 1-8 Climatic ambient conditions

Ambient conditions	Permissible range	Remark
Temperature	0 to +60° C	
Temperature change	Max. 10° C / h	
Relative humidity	Max. 95% at +25° C	No condensation
Barometric pressure	1080 to 795 hPa (corresponds to an elevation of -1000 to 2000 m)	
Concentration of pollutants	SO_2: < 0.5 ppm; RH < 60%, no condensation H_2S: < 0.1 ppm; RH < 60%, no condensation	Test: 10 ppm; 10 days Test: 1 ppm; 10 days
	ISA-S71.04 severity level G1; G2; G3	-

1.5 Information on insulation tests, protection class and degree of protection

Test voltages

Where required, insulation resistance is proved in routine testing with test voltages in accordance with IEC 61131-2.

Protection class

Protection class I in accordance with IEC 61140, i.e. protective conductor connection to power module required!

Protection from foreign objects and water

IP20 in accordance with IEC 60529, i.e. protection against contact with standard probes.

There is no water ingress protection.

Rack

2

2.1 Function and design of the racks

Introduction

The racks for the S7-400 have the following functions:

- They physically hold the modules.
- They supply the modules with operating voltage.
- They connect the individual modules to each other via the signal busses.

Design of the racks

A rack consists of the following elements:

- Mounting rail with threaded bolts for fixing the modules and lateral cutouts for mounting the rack
- Plastic parts that function, among other things, as guides when swinging the modules into place
- A backplane bus, an I/O bus and, if necessary, a communication bus with bus connector
- Connection for local ground

The following figure shows the mechanical configuration of a rack (UR1).

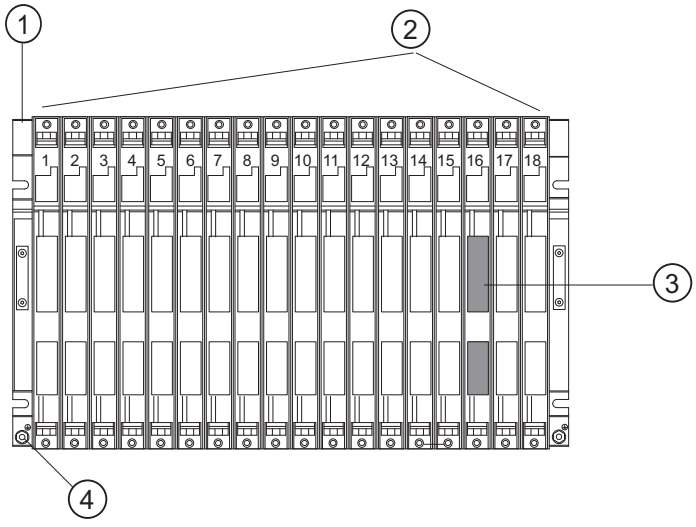

Figure 2-1 Configuration of a rack with 18 slots

(1) Mounting rail

(2) Plastic parts

(3) Bus connector (covered when shipped)

(4) Connection for local ground

UL/CSA note

Special requirements should be taken into consideration in the area of influence of the UL/CSA; these may be fulfilled by installing the system in a cabinet.

2.2 The racks UR1 (6ES7400-1TAx1-0AA0) and UR2 (6ES7400-1JAx1-0AA0)

Order number

The "x" variable has the following meaning for order numbers 6ES7400-1TAx1-0AA0 and 6ES7400-1JAx1:

- x=0: Mounting rail made of sheet steel
- x=1: Mounting rail made of aluminum

Introduction

The UR1 and UR2 racks are used for assembling central racks and expansion racks. The UR1 and UR2 racks have both an I/O bus and a communication bus.

Suitable modules for UR1 and UR2

You can use the following modules in the UR1 and UR2 racks:

- When the UR1 or UR2 is used as a central rack:
  All S7-400 modules except for receive IMs
- When the UR1 or UR2 is used as an expansion rack:
  All S7-400 modules except for CPUs and send IMs

Special case: Power supply modules cannot be used in conjunction with the IM 461-1 receive IM.

Design of the UR1 and UR2

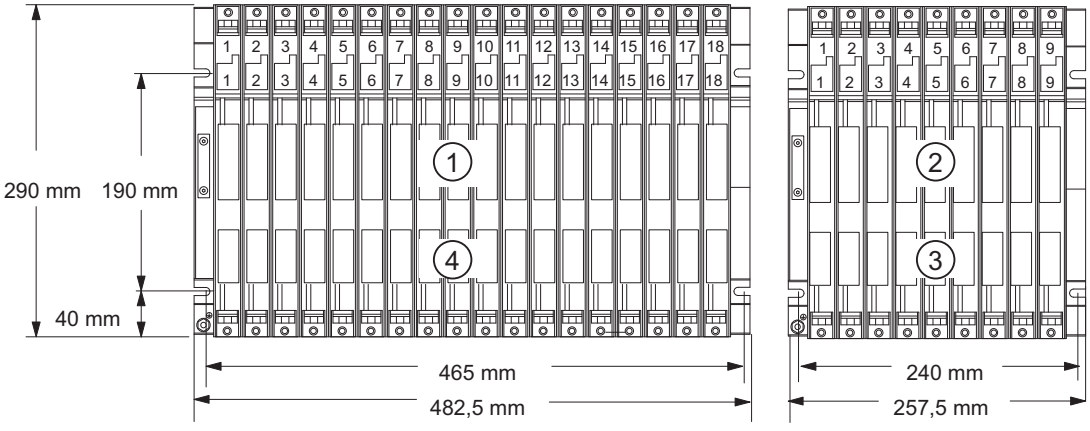

(1)+(2) I/O bus

(3)+(4) Communication bus

Figure 2-2 UR1 rack with 18 slots and UR2 with 9 slots

Specifications of the UR1 and UR2 racks

Rack	**UR1 6ES7 400-1TA01-0AA0**	**UR1 6ES7 400-1TA11-0AA0**	**UR2 6ES7 400-1JA01-0AA0**	**UR2 6ES7 400-1JA11-0AA0**
Number of single-width slots	18	18	9	9
Dimensions W x H x D (mm)	482.5x 290 x 27.5	482.5x 290 x 27.5	257.5x 290 x 27.5	257.5x 290 x 27.5
Material of the mounting rail	Sheet steel	Aluminum	Sheet steel	Aluminum
Weight (in kg)	4,1	3,0	2,15	1,5
Busses	I/O bus and communication bus			

2.3 UR2-H Rack 6ES7400-2JAx0-0AA0)

Order number

The "x" variable has the following meaning for order number 6ES7400-2JAx0-0AA0:

- x=0: Mounting rail made of sheet steel
- x=1: Mounting rail made of aluminum

Introduction

The UR2-H rack is used for assembling two central racks or expansion racks in one rack. The UR2-H rack essentially represents two electrically isolated UR2 racks on the same mounting rail. The main area of application of the UR2-H is in the compact structure of redundant S7-400H systems (two devices or systems in one rack).

Suitable modules for UR2-H

You can use the following modules in the UR2-H rack:

- When the UR2-H is used as a central rack:
  All S7-400 modules except for receive IMs
- When the UR2-H is used as an expansion rack:
  All S7-400 modules except for CPUs, send IMs, the IM 463-2, and the adapter module

Special case: Power supply modules cannot be used in conjunction with the IM 461-1 receive IM.

Design of the UR2-H

The following figure shows the design of the UR2-H rack with 2x9 slots.

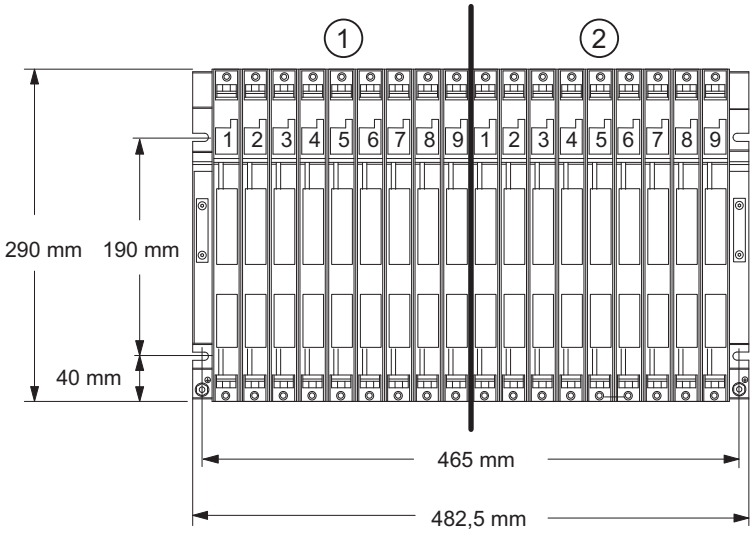

Figure 2-3 Rack dimensions

(1) System I
(2) System II

CAUTION

Danger of damage to equipment.

If you insert the power supply module in a slot that is not intended for power supply modules, the module may be damaged. Slots 1 to 4 are permitted, whereby power supply modules starting from slot 1 must be inserted without leaving gaps.

Make sure that power supply modules are only inserted in permitted slots. Take particular notice of the option of swapping modules in slot 1 on rack II and slot 9 on rack I.

Specifications of the UR2-H rack

Rack	UR2-H 6ES7 400-2JA00-0AA0	UR2-H 6ES7 400-2JA10-0AA0
Number of single-width slots	2 x 9	2 x 9
Dimensions W x H x D (mm)	482.5 x 290 x 27.5	482.5 x 290 x 27.5
Material of the mounting rail	Sheet steel	Aluminum
Weight (in kg)	4,1	3,0
Busses	Segmented I/O bus, segmented communication bus	

2.4 Rack CR2 (6ES7401-2TA01-0AA0)

Introduction

The CR2 rack is used for the design of segmented central racks. The CR2 has both an I/O bus and a communication bus. The I/O bus is split into two local bus segments with 10 or 8 slots.

Suitable modules for the CR2

You can use the following modules in the CR2 rack:

- All S7-400 modules except for receive IMs

Design of the CR2

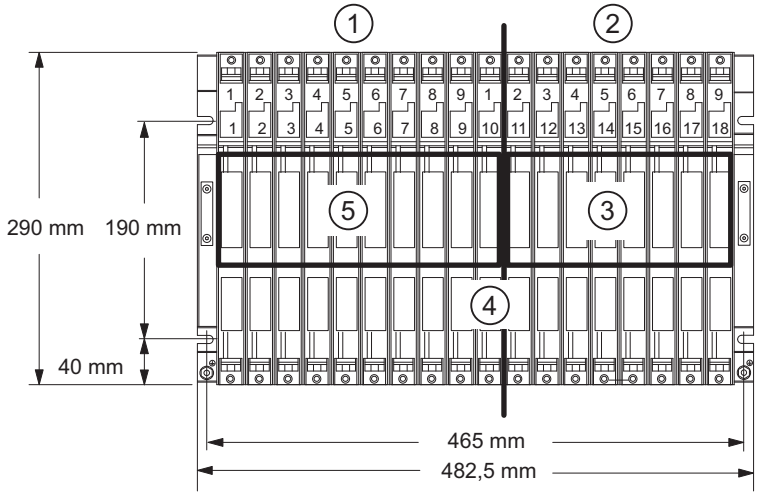

Figure 2-4 CR2 rack

(1) Segment 1

(2) Segment 2

(3) I/O bus segment 2

(4) Communication bus

(5) I/O bus segment 1

Specifications of the CR2 rack

Rack	CR2
Number of single-width slots	18
Dimensions W x H x D (mm)	482.5 x 290 x 27.5
Material of the mounting rail	Sheet steel
Weight (in kg)	4,1
Busses	Segmented I/O bus, full-length communication bus
Only one power supply module required	

2.5 Rack CR3 (6ES7401-1DA01-0AA0)

Introduction

The CR3 rack is used for the design of central racks in standard systems (not in fault-tolerant systems). The CR3 has both an I/O bus and a communication bus.

Suitable modules for the CR3

You can use the following modules in the CR3 rack:

- All S7-400 modules except for receive IMs
- You can only operate only one CPU 41x-4H at a time.

Design of the CR3

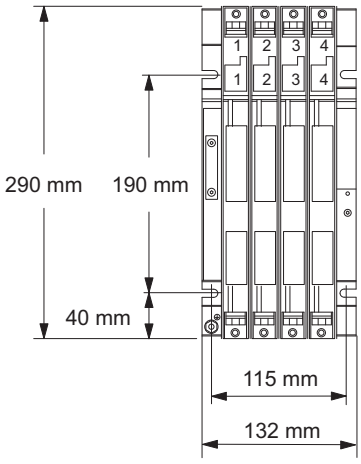

Figure 2-5 CR3 rack

Specifications of the CR3 Rack

Rack	CR3
Number of single-width slots	4
Dimensions W x H x D (mm)	132 x 290 x 27.5
Material of the mounting rail	Sheet steel
Weight (in kg)	0,75
Busses	I/O bus and communication bus

2.6 Racks ER1 (6ES7403-1TAx1-0AA0) and ER2 (6ES7403-1JAx1-0AA0)

Order number

The "x" variable has the following meaning for order numbers 6ES7403-1TAx0-0AA0 und 6ES7403-1JAx01-0AA0:

- x=0: Mounting rail made of sheet steel
- x=1: Mounting rail made of aluminum

Introduction

The ER1 and ER2 racks are used for the design of expansion racks.

The ER1 and ER2 racks have only one I/O bus with the following restrictions:

- Interrupts from modules in the ER1 or ER2 have no effect since there are no interrupt lines provided.
- Modules in the ER1 or ER2 are not supplied with 24 V. Modules requiring a 24 V supply are not provided for use in the ER1 or ER2.
- Modules in the ER1 or ER2 are not backed up either by the battery in the power supply module or by the voltage supplied externally to the CPU or the receive IM (EXT.-BATT. socket). There is therefore no advantage in using backup batteries in the power supply modules in ER1 and ER2.
  Battery faults and backup voltage faults are not reported to the CPU. The battery monitoring function of a power supply module installed in the ER1 or ER2 should therefore always be switched off.

Suitable modules for ER1 and ER2

You can use the following modules in the ER1 and ER2 racks:

- All power supply modules
- Receive IMs
- All signal modules provided the above-mentioned restrictions are observed.

Special case: Power supply modules cannot be used in conjunction with the IM 461-1 receive IM.

Design of the ER1 and ER2

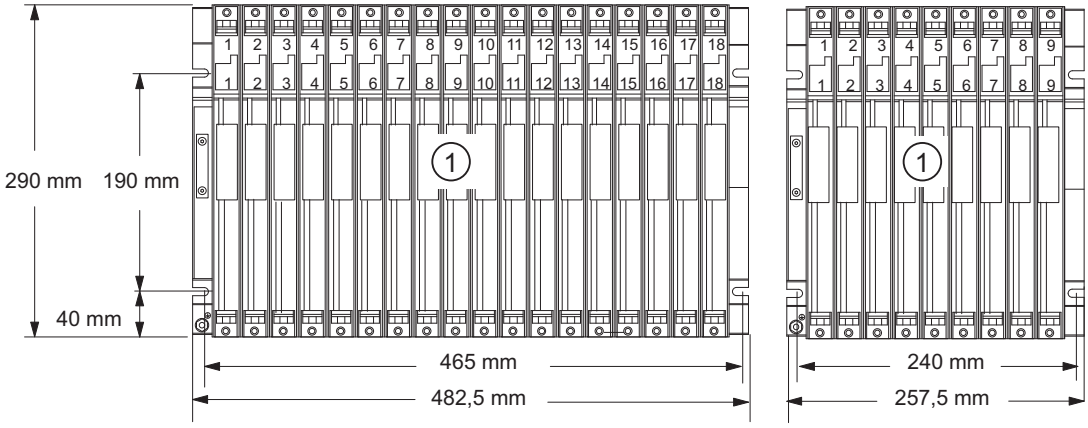

Figure 2-6 ER1 rack with 18 slots and ER2 with 9 slots
(1) I/O bus

Specifications of the ER1 and ER2 racks

Rack	ER1 6ES7 403-1TA01-0AA0	ER1 6ES7 403-1TA11-0AA0	ER2 6ES7 403-1JA01-0AA0	ER2 6ES7 403-1JA11-0AA0
Number of single-width slots	18	18	9	9
Dimensions W x H x D (in mm)	482.5 x 290 x 27.5	482.5 x 290 x 27.5	257.5 x 290 x 27.5	257.5 x 290 x 27.5
Material of the mounting rail	Sheet steel	Aluminum	Sheet steel	Aluminum
Weight (in kg)	3,8	2,5	2,0	1,25
Busses	Restricted I/O bus			

Power supply modules 3

3.1 Common characteristics of the power supply modules

Functions of the power supply modules

The power supply modules of the S7-400 supply the other modules in the rack with their operating voltages via the backplane bus. They do not provide load voltages for the signal modules.

Common characteristics of the power supply modules

The power supply modules share the following characteristics in addition to their individual specifications:

- Encapsulated design for use in racks of the S7-400 system
- Cooling via natural convection
- Plug-in connection of the supply voltage with AC - DC coding
- Protection class I (with protective conductor) in accordance with IEC 61140; VDE 0140, Part 1
- Limitation of the inrush current in accordance with NAMUR Recommendation NE 21
- Short-circuit-proof outputs
- Monitoring of both output voltages. If one of these voltages fails, the power supply module signals a fault to the CPU.
- Both output voltages (5 VDCand 24 VDC) share a common ground.
- Primary clocked
- Battery backup as option. The parameters set and the memory contents (RAM) are backed up via the backplane bus in the CPUs and programmable modules. In addition, the backup battery enables you to carry out a restart of the CPU. Both the power supply module and the backed up modules monitor the battery voltage.
- Operating and fault/error LEDs on the front plate.

Note

A mains disconnecting device must be provided when installing AC power supply modules.

Switching the line voltage Off/On

The power supply modules have an inrush current limiter in accordance with NAMUR.

Power supply module in invalid slot

If you insert the power supply module of a rack in an invalid slot, it will not power up. In this case, proceed as follows to start up the power supply module correctly:

1. Disconnect the power supply module from the mains (not just the standby switch).
2. Remove the power supply module.
3. Install the power supply module in slot 1.
4. Wait at least 1 minute and then switch the line voltage on again.

CAUTION

Danger of damage to equipment.

If you insert the power supply module in a slot that is not intended for power supply modules, the module may be damaged. Slots 1 to 4 are permitted, whereby power supply modules starting from slot 1 must be inserted without leaving gaps.

Make sure that power supply modules are only inserted in permissible slots.

3.2 Redundant power supply modules

Order numbers and function

Table 3-1 Redundant power supply modules

Type	Order number	Input voltage	Output voltage	See section
PS 407 10A R	6ES7407-0KR00-0AA0	85 to 264 VAC or 88 to 300 VDC	5 VDC/10 A and 24 VDC/ 1 A	3.8 (Page 58)
PS 407 10A R	6ES7 407-0KR02-0AA0	85 to 264 VAC or 88 to 300 VDC	5 VDC/10 A and 24 VDC/ 1 A	3.9 (Page 61)
PS 405 10A R	6ES7405-0KR00-0AA0	19.2 to 72 VDC	5 VDC/10 A and 24 VDC/ 1 A	3.14 (Page 72)
PS 405 10A R	6ES7 405-0KR02-0AA0	19.2 to 72 VDC	5 VDC/10 A and 24 VDC/ 1 A	3.15 (Page 74)

Redundant operation

Using two power supply modules of type PS 407 10A R or PS 405 10A R, you can design a redundant power supply for a rack. We recommend this if you want to increase the availability of your programmable controller, particularly if you are operating it on an unreliable power system.

Designing a redundant power supply

Redundant operation is possible with any of the S7 CPUs and racks described in this manual. STEP 7 as of V4.02 is also required.

To design a redundant power supply, insert a power supply module into slots 1 and 3 of the rack. You can then insert as many modules as can be supplied by a single power supply module. In other words, in redundant operation all the modules can only draw a total of 10 A.

Features

The redundant power supply of an S7-400 has the following characteristics:

- The power supply module features an inrush current in accordance with NAMUR.
- Each of the power supply modules can take over the supply of power to the whole rack if the other one fails. There is no loss of operation.
- Each of the power supply modules can be exchanged while the system is in operation. No loss of power and no peak stress occurs with the effective voltages when the modules are removed or inserted.
- Each of the power supply modules monitors its function and sends a message if it fails.
- Neither of the power supply modules can generate an error which affects the output voltage of the other power supply module.

- A redundant battery concept (backup concept) is only provided when two backup batteries are used in each of the power supply modules. If only one battery is used in each module, only non-redundant backup is possible, since both batteries are being used at the same time.
- The failure of a power supply module is registered via a plug and remove interrupt (default STOP). If used in the second segment of the CR 2 no message is sent if the power supply module fails.
- If two power supply modules are inserted but only one is switched on, there is a power-up delay of up to one minute when the line voltage is switched on.

Note

The check box "Startup if preset configuration not equal to actual configuration" should be activated in the "Properties" dialog box of the CPU.

3.3 Backup battery (option)

Introduction

The power supply modules of the S7-400 have a battery compartment for one or two backup batteries. Use of these batteries is optional.

Function of the backup batteries

If backup batteries have been installed, the parameters set and the memory contents (RAM) will be backed up via the backplane bus in CPUs and programmable modules if the power supply module is turned off or the supply voltage fails. The battery voltage must be within the tolerance range.

In addition, the backup battery enables you to carry out a restart of the CPU after power-on.

Both the power supply module and the backed up modules monitor the battery voltage.

Insert backup battery

Activate battery monitoring once you have installed one or two backup batteries. Make sure that neither the respective LED BATT1F or BATT2F nor the LED BAF are illuminated. Only then is the backup battery working properly and backup guaranteed as described above.

Note

Insert the power supply module in the rack and switch it on before you insert the backup battery for the first time. This will increase the service life of the backup battery.

Power supply modules with two backup batteries:

Some power supply modules contain a battery compartment for two batteries. If you use two batteries and set the switch to 2BATT, the power supply module defines one of the two batteries as the backup battery. This assignment remains in force until the battery is empty. When the backup battery is completely discharged, the system switches to the reserve battery which is then in turn used as the backup battery for the duration of its life. The status "backup battery" is also stored in the event of a power failure.

Battery type

You may only use batteries certified by Siemens! (see Appendix C: Spare parts (Page 421)).

The batteries can form a passivation layer. Depassivation takes place when the batteries are inserted in the power supply module.

Specifications of the backup battery

Backup battery	
Order number	6ES7971-0BA00
Type	1 x lithium AA
Nominal voltage	3.6 V
Nominal capacity	2,3 Ah

Backup times

The maximum backup time is based on the capacity of the backup batteries used and the backup current in the rack. The backup current is the sum of all individual currents of the inserted backed-up modules as well as the requirements of the power supply module when the power is switched off.

Example for the calculation of backup times

The capacity of the batteries is listed in the technical specifications of the power supply. The typical and maximum backup current of the backed-up module is listed in the technical specifications of the module.

The typical backup current of a CPU is an empirically determined value. The maximum backup current is a worst-case value that is calculated based on the corresponding manufacturer specifications for the memory blocks.

The following technical specifications produce backup times for a CR with a PS 407 4A (6ES7407-0DA02-0AA0) and a CPU 417-4 (6ES7417-4XT05-0AB0) as the only backed-up module:

- Capacity of the backup battery: 2,3 Ah
- Maximum backup current (including own requirement at power off) of the power supply: 100 µA
- Typical backup current of the CPU 417-4: 225 µA to 40° C.

A nominal capacity of less than 100% is to be assumed when calculating the backup time because the backup battery is also affected at power on by regular depassivation.

A battery capacity of 63% of the nominal capacity produces the following values:

Backup time = 2,3 Ah * 0.63 / (100 + 225) µA = (1,449 / 325) * 1 000 000 = 4458 h

This produces a maximum backup time of 185 days.

3.4 Operator controls and indicators

Introduction

The power supply modules of the S7-400 have essentially the same controls and indicators. The main differences are:

- Power supply modules with a backup battery have an LED (BATTF) that indicates an empty, defective, or missing backup battery.
- Power supply modules with two redundant backup batteries have two LEDs (BATT1F and BATT2F) to indicate empty, defective or missing backup battery.

Operator controls and indicators

The figure shows you an example of a power supply module (PS 407 20A) with two (redundant) backup batteries. The LEDs are at the top left of the module front plate.

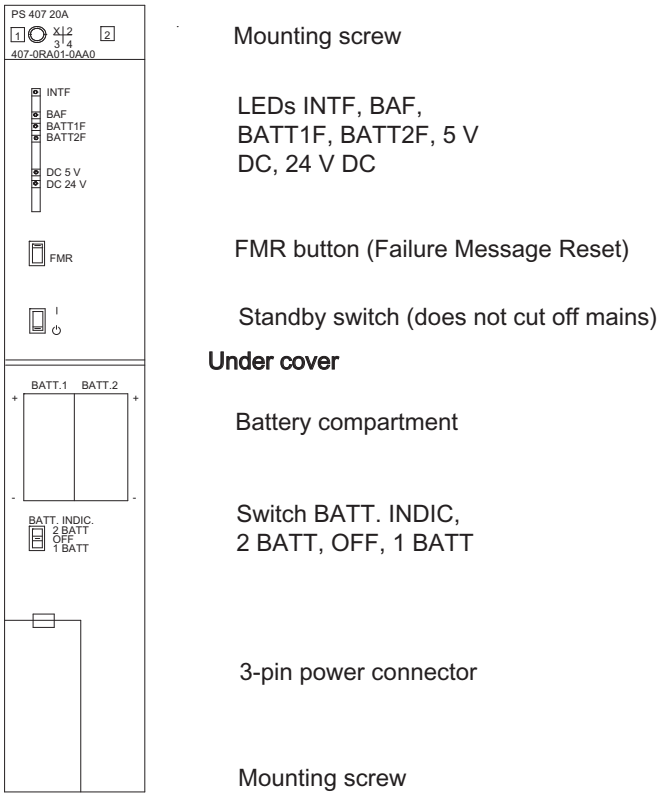

Figure 3-1 Operator controls and indicators on the PS 407 20A power supply module

Meaning of the LEDs

The meaning of the LEDs on the power supply modules is described in the tables below. The following section contains a list of the faults indicated by these LEDs and notes on how to acknowledge the faults.

LEDs INTF, 5 VDC, 24 VDC

Table 3-2 LEDs INTF, 5 VDC, 24 VDC

LED	Color	Meaning
INTF	Red	Lights up in the event of an internal fault
5 VDC	green	Lights up as long as the 5 V voltage is within the tolerance limits
24 VDC	green	Lights up as long as the 24 V voltage is within the tolerance limits

LEDs BAF, BATTF

Power supply modules with a backup battery have the following indicators:

Table 3-3 LEDs BAF, BATTF

LED	Color	Meaning
BAF	Red	Lights up if the battery voltage on the backplane bus is too low and the BATT.INDIC switch is at the BATT position
BATTF	Yellow	Lights up if the battery is empty, if the polarity is reversed, or if the battery is missing, and the BATT.INDIC switch is at the BATT position

LEDs BAF, BATT1F, BATT2F

Power supply modules with two backup batteries have the following indicators:

Table 3-4 LEDs BAF, BATT1F, BATT2F

LED	Color	Meaning
BAF	Red	Lights up if the battery voltage on the backplane bus is too low and the BATT.INDIC switch is at the 1 BATT or 2 BATT position
BATT1F	Yellow	Lights up if battery 1 is empty or if the polarity is reversed or if the battery is missing, and the BATT.INDIC switch is at the 1 BATT or 2 BATT position
BATT2F	Yellow	Lights up if the battery 2 is empty, if the polarity is reversed, or if the battery is missing, and the BATT.INDIC switch is at the 2 BATT position

Backup voltage to the backplane bus

The backup voltage is either supplied by the backup battery or fed externally into the CPU or receiver IM. In its normal state, the level of the backup voltage is between 2.7 V and 3.6 V.

The backup voltage is monitored at the lower limit. Violation of the lower limit is indicated by the BAF LED and reported to the CPU.

BAF lights up if the backup voltage on the backplane bus is too low. Possible causes of this include:

- Battery (batteries) empty or battery polarity has been reversed.
- External supply via CPU or receive IM is defective or supply from secondary power supply module is defective or missing.
- Short-circuit or overload on the battery voltage.

Note

Due to internal capacities, if you remove the battery or switch off the external supply, some time may elapse before BAF, BATT1F, or BATT2F lights up.

Function of the operator controls of the power supply modules

Table 3-5 Function of the operator controls of the power supply modules

Control	Function	
FMR button	For acknowledging and resetting a fault indicator after correcting the fault	
Standby switch	Switches the output voltages (5 V VDC24 VDC) to 0 V by intervening in the control loop (no mains disconnection).	
	• |	Output voltages at nominal value
	• ⏻	Output voltage 0 V
Switches BATT.INDIC	Used for setting LEDs and battery monitoring Where one battery can be used (PS 407 4A, PS 405 4A): • OFF: LEDs and monitor signals inactive • BATT: BAF/BATTF LEDs and monitor signals active Where two batteries can be used (PS 407 10A, PS 407 20A, PS 405 10A, PS 405 20A): • OFF: LEDs and monitor signals inactive • 1 BATT: Only BAF/BATT1F LEDs (for battery 1) active. • 2 BATT: BAF/BATT1F/BATT2F LEDs (for batteries 1 and 2) active.	
Battery compart-ment	For backup battery (batteries)	
Power connection	3-pin connector for the power main (do not pull and plug under power)	

Cover

The battery compartment, battery selector switch, voltage selector switch and power connection are housed under one cover. The cover must remain closed during operation in order to protect these operator controls and to prevent static electricity from affecting the battery connections.

Discharge your body before you start taking any measurements on a module. Do so by touching grounded metallic parts. Always use grounded measuring instruments.

3.5 Fault/Error messages via LEDs

Introduction

The power supply modules of the S7-400 indicate module faults and backup battery faults via LEDs on the front plate.

Overview of the error messages of the power supply modules

Table 3-6 Error messages of the power supply modules

Type of fault/error	LED
Module error	INTF 5 VDC 24 VDC
Backup battery fault	Power supplies with 1 backup battery: BAF BATTF
	Power supplies with 2 backup battery: BAF BATT1F BATT2F

INTF, 5 VDC, 24 VDC LEDs

The following table shows the faults indicated by the INTF, 5 VDC, and 24 VDC LEDs and lists how to remedy the faults. The status of the BAF, BATTF, BATT1F, and BATT2F LEDs is not relevant here.

Table 3-7 INTF, 5 VDC, 24 VDC LEDs

INTF LED	LED DC5V	LED DC24V	Cause of fault	Remedy
D	D	D	Standby switch in ⏻ position	Set standby switch to the | position
			Line voltage missing	Check line voltage
			Internal fault, power supply module defective	Replace power supply module
			Cutoff after overvoltage on 5 V or non-permissible external supply	Disconnect from mains and reconnect after approximately 3 minutes; if necessary, remove external supply
			Power supply module operated in wrong slot	Install the power supply module in the correct slot (slot 1)
			Short-circuit or overload on 5 V	Switch off the power supply module, remove the source of the short-circuit; after approximately 3 seconds, the power supply module can be switched on with the standby switch or via the power system.*

INTF LED	LED DC5V	LED DC24V	Cause of fault	Remedy
D	H	D	Overvoltage on 24 V	Check if there is an external supply; if not, replace power supply module.
H	D*	D	Short-circuit or overload on 5 V and 24 V and overheating	Check the load on the power supply module. Remove module if necessary. Wait 5 minutes before switching the power supply module again.
H	H	D	If the standby switch is set to the ⏻ position, illegal external supply on 5 V	Remove all modules; determine which module is faulty.
			If the standby switch is set to the | position, short-circuit or overload on 24 V.	Check the load on the power supply module. Remove module if necessary.
D	B	H	Voltage restored after short-circuit or overload on 5 V if faults occur in operation	Press FMR button: Flashing changes to steady light
			Dynamic overload on 5 V	Check load on the power supply module. Possibly remove modules.
D	B	B	Voltage restored after short-circuit or overload on 5 V and 24 V if faults occur in operation	Press FMR button: Flashing changes to steady light
D	B	B	Dynamic overload on 5 V and 24 V	Check load on the power supply module. Possibly remove modules.
D = LED is dark; H = LED lights up; B = LED flashing;				

* If the power supply module does not start up again after a few seconds once the overload has been removed, remove power to the module for 5 minutes and then switch it on again. If the module stills does not start up, you must replace it. This applies to the following power supply modules:

- 6ES7407-0KA01-0AA0, Release 3
- 6ES7407-0KR00-0AA0, Release ≤ 5
- 6ES7407-0KA01-0AA0, Release ≥ 10
- 6ES7405-0DA02-0AA0, 6ES7407-0DA02-0AA0
- 6ES7405-0KA02-0AA0, 6ES7407-0KA02-0AA0
- 6ES7405-0KR02-0AA0, 6ES7407-0KR02-0AA0
- 6ES7405-0RA02-0AA0, 6ES7407-0RA02-0AA0

The same characteristic is displayed by the built-in overtemperature protection is triggered.

If either the 5 VDC or 24 VDC LEDs remains dark after switching on, the system has not powered up.

If either of the 5 VDC or 24 VDC LEDs of the PS 407 10AR remains dark for longer than 1 or 2 seconds after it is switched on, the power supply module will not start up.

The following power supply modules will switch off in the event of a short-circuit or overload after 1 to 3 seconds. The module will try to restart after no more than 3 seconds. If the error has been eliminated by then, the module will start up. This applies to the following modules:

Modules	
PS 405 4A (6ES7405-0DA01-0AA0)	PS 407 4A (6ES7407-0DA01-0AA0)
PS 405 4A (6ES7405-0DA02-0AA0)	PS 407 4A (6ES7407-0DA02-0AA0)
PS 405 10A (6ES7405-0KA01-0AA0)	PS 407 10A (6ES7407-0KA01-0AA0), release ≥5
PS 405 10A (6ES7405-0KA02-0AA0)	PS 407 10A (6ES7407-0KA02-0AA0)
PS 405 10A R (6ES7405-0KR00-0AA0)	PS 407 10A R (6ES7407-0KR00-0AA0), release ≥7
PS 405 10A R (6ES7405-0KR02-0AA0)	PS 407 10A R (6ES7407-0KR02-0AA0)
PS 405 20A (6ES7405-0RA01-0AA0)	PS 407 20A (6ES7407-0RA01-0AA0)
PS 405 20A (6ES7405-0RA02-0AA0)	PS 407 20A (6ES7407-0RA02-0AA0)

Overload at 24 V

In the event of overload at 24 V the output current is electronically limited to a value between 100% and 150% of the rated value. If the voltage then goes below the undervoltage threshold of 19.2 V (-0/+ 5% corresponds to 19.2 V to 20.16 V), the modules respond as follows:

- For the power supply modules, the 24 V voltage is disconnected and reconnected at a repeat rate of approx. 0.5 to 1 seconds until there is an output voltage that exceeds the undervoltage threshold.
- For the power supply modules 6ES7407-0KA01-0AA0, 6ES740x-0KR00-0AA0 and 6ES740x-0KR01-0AA0, the voltage reaches the level determined by the load impedance, the module is in the characteristic operating range.

After the overload has been eliminated, the voltage returns to the nominal range and the green 24 V LED flashes. The CPU sets the EXTF LED (external fault) and saves the fault in the diagnostic buffer. You can trigger other responses, such as CPU STOP or a message to a control room, in OB 81 (power supply error). If OB 81 is not configured, the CPU continues as normal.

Overload at 5 V

In the event of an overload at 5 V, the power supply modules with 10 A or 20 A output current can retain an output current of 16 A or 26 A for 300 ms. The power supply modules with 4 A output current can retain an output current of 6 A for 300 ms. The CPU will then go to DEFECT afterwards. If the 5 VDC LED flashes on the power supply and can be reset with the FMR button, you will be able to perform a restart. The CPU will remain in STOP afterwards and will then require a memory reset.

BAF, BATTF

The following table applies to power supply modules with one battery if the BATT.INDIC switch is set to the BATT position. It shows the faults indicated and lists how to remedy the faults.

Table 3-8 BAF, BATTF; BATT.INDIC LEDs on BATT

LED BAF	LED BATF	Cause of fault	Remedy
H	H	Battery empty or missing. No external backup voltage available	Insert new battery. Press FMR button.
D	H	Battery is empty or missing. Battery stored too long. External backup voltage available.	Insert new battery. Press FMR button. Depassivate battery (see *Installation Manual*).
H	D	Battery in order. No backup voltage available (short-circuit)	• Fault after plugging in a module: Plugged-in module defective • Fault after switching on: Remove all modules and plug in individually
D	D	Battery OK. External backup voltage available.	-
D = LED is dark; H = LED lights up;			

BAF, BATT1F, BATT2F

The following table applies to power supply modules with two batteries if the BATT.INDIC switch is set to the 1BATT position. It shows the faults indicated and lists how to remedy the faults.

Nothing is indicated about the condition of any second battery that may be in use.

Table 3-9 BAF, BATT1F, BATT2F, BATT.INDIC LEDs on 1BATT

LED BAF	LED BATT1F	LED BATT2F	Cause of fault	Remedy
H	H	D	Battery 1 empty or missing No external backup voltage available.	Insert new battery in compartment 1. Press FMR button.
D	H	D	Battery 1 empty or missing External backup voltage available.	Insert new battery in compartment 1. Press FMR button.
			Battery stored too long. External backup voltage available.	Depassivate battery (see *Installation Manual*)
H	D	D	Battery 1 OK. No external backup voltage available (short-circuit)	• Fault after plugging in a module: Plugged-in module defective • Fault after switching on: Remove all modules and plug in individually
D	D	D	Battery 1 OK. External backup voltage available.	-
D = LED is dark; H = LED lights up;				

BAF, BATT1F, BATT2F

The following table applies to power supply modules with two batteries if the BATT.INDIC switch is set to the 2BATT position. It shows the faults indicated and lists how to remedy the faults.

Table 3-10 BAF, BATT1F, BATT2F, BATT.INDIC LEDs on 2BATT

LED BAF	LED BATT1F	LED BATT2F	Cause of fault	Remedy
H	H	H	Both batteries are empty or missing. No external backup voltage available	Insert new batteries in compartments 1 and 2 Press FMR button.
D	H	H	Both batteries are empty or missing. External backup voltage available	Insert new batteries in compartments 1 and 2 Press FMR button.
H	H	D	Battery 1 empty or missing No external backup voltage available (short-circuit or overload)	Insert new battery in compartment 1. Press FMR button. • Fault after plugging in a module: Plugged-in module defective • Fault after switching on: Remove all modules and plug in individually
D	H	D	Battery 1 empty or missing	Insert new batteries in compartments 1 and 2 Press FMR button.
			Battery has been stored for too long External backup voltage available	Depassivate battery (see *Installation Manual*).
H	D	H	Battery 2 empty or missing No external backup voltage available (short-circuit or overload)	Insert new battery in compartment 2. Press FMR button. • Fault after plugging in a module: Plugged-in module defective • Fault after switching on: Remove all modules and plug in individually
D	D	H	Battery 2 empty or missing	Insert new batteries in compartments 1 and 2 Press FMR button.
			Battery has been stored for too long External backup voltage available	Depassivate battery (see *Installation Manual*).
H	D	D	Both batteries in order. No external backup voltage available (short-circuit)	• Fault after plugging in a module: Plugged-in module defective • Fault after switching on: Remove all modules and plug in individually

LED BAF	LED BATT1F	LED BATT2F	Cause of fault	Remedy
D	D	D	Both batteries in order. External backup voltage available	-
D = LED is dark; H = LED lights up;				

3.6 Power supply module PS 407 4A (6ES7407-0DA01-0AA0)

Function

The power module PS 407 4A is designed for connection to an 85 to 264 V AC network or an 88 to 300 V DC network, and supplies DC 5 V/4 A and DC 24 V/0.5 A at the secondary side.

PS 407 4A operator control and monitoring elements

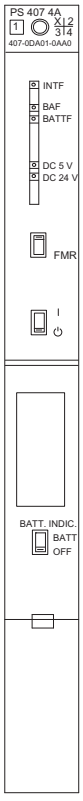

Mounting screw

LEDs INTF, BAF,
BATTF,
5 V DC, 24 V DC

FMR button (Failure Message Reset)

Standby switch (does not cut off mains)

Under cover

Battery compartment

Switch BATT. INDIC, BATT,
OFF

3-pin power connector

Mounting screw

Figure 3-2 PS 407 4A operator control and monitoring elements

Mains connection

An AC power plug is used with PS 407 4A for connection to an AC network and for connection to a DC network.

Reverse polarity of L+ and L-

Reverse polarity of L+ and L with a supply voltage of DC 88 V to DC 300 V does not affect the function of the power supply. The connection should comply with the instructions in the installation manual.

PS 407 4A technical specifications

Dimensions, weight and cable cross-sections	
Dimensions W x H x D (mm) Weight Cable cross-section	25 x290x217 0.76 kg 3x1.5 mm^2 (stranded wire with wire end ferrule with insulating sleeve; use hose line only)
Cable diameter	3 to 9 mm
Input variables	
Input voltage	
• Rated value	DC 120/240 V AC 120/240 V
• Permitted range	88 to 300 V DC 85 to 264 V AC (wide range input)
Line frequency	
• Rated value	50/60 Hz
• Permitted range	47 to 63 Hz
Rated input current	
• With 120 V AC	0.38 A
• With 120 V DC	0.37 A
• With 240 V AC	0.22 A
• With 240 V DC	0.19 A
Leakage current	< 3.5 mA
Output variables	
Output voltage	
• Rated values	5.1 V DC/24 V DC
Output current	
• Rated values	5 V DC: 4 A 24 V DC: 0.5 A
Parameters	
Protection class pursuant to IEC 60536	I, with protective conductor
Overvoltage category	II
Pollution degree	2
Rated voltage U_e $0 < U_e \leq 50$ V $150 V < U_e \leq 300$ V	Test voltage 700 V DC (secondary <-> PE) 2200 V DC (primary <-> secondary/PE)
Backup for power failures	> 20 ms at a repeat rate of 1 s, meets NAMUR recommendation NE 21
Power consumption 240 V AC	52 W
Power loss	20 W
Backup current	maximum of 100 µA when power off

Back-up battery (option)	1 x lithium AA, 3.6 V/2.3 Ah
Protective separation in accordance with IEC 61131-2	Yes

3.7 Power supply module PS 407 4A (6ES7407-0DA02-0AA0)

Function

The power module PS 407 4A is designed for connection to an 85 to 264 V AC network or an 88 to 300 V DC network, and supplies DC 5 V/4 A and DC 24 V/0.5 A at the secondary side.

PS 407 4A operator control and monitoring elements

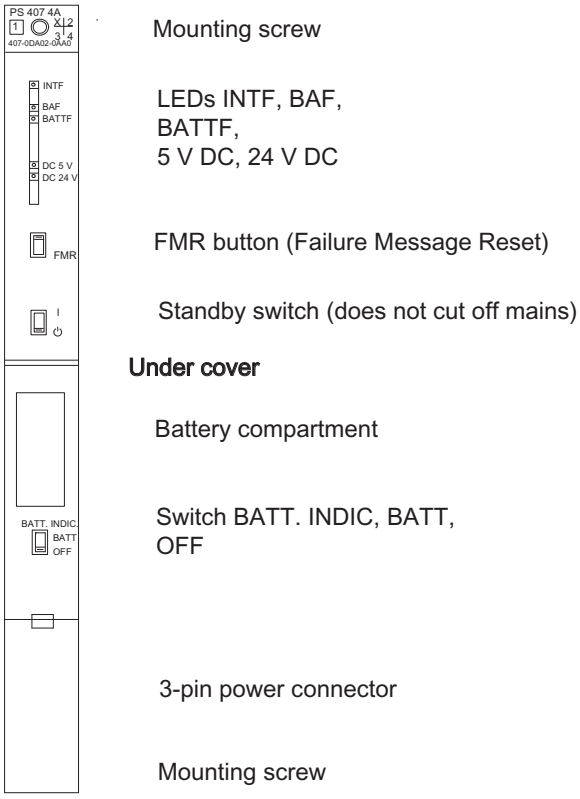

Figure 3-3 PS 407 4A operator control and monitoring elements

Mains connection

An AC power plug is used with PS 407 4A for connection to an AC network and for connection to a DC network.

Reverse polarity of L+ and L-

Reverse polarity of L+ and L with a supply voltage of 88 V DC to 300 V DC does not affect the function of the power supply. The connection should comply with the instructions in the installation manual.

PS 407 4A technical specifications

Dimensions, weight and cable cross-sections	
Dimensions W x H x D (mm) Weight Cable cross-section	25 x290x217 0.76 kg 3x1.5 mm^2 (stranded wire with wire end ferrule with insulating sleeve; use hose line only)
Cable diameter	3 to 9 mm
Input variables	
Input voltage	
• Rated value	120/230 V DC 120/230 V AC
• Permitted range	88 to 300 V DC 85 to 264 V AC (wide range input)
Line frequency	
• Rated value	50/60 Hz
• Permitted range	47 to 63 Hz
Rated input current	
• With 120 V AC	0.42 A
• With 120 V DC	0.35 A
• At 230 V AC	0.31 A
• At 230 V DC	0.19 A
Inrush current	
• At 230 V AC	Peak value 8.5 A full width at half maximum 5 ms
• At 300 V DC	Peak value 8.5 A full width at half maximum 5 ms
Leakage current	< 3.5 mA
Output variables	
Output voltage	
• Rated values	5.1 V DC/24 V DC
Output current	
• Rated values	5 V DC: 4 A 24 V DC: 0.5 A
Parameters	
Protection class pursuant to IEC 61140	I, with protective conductor
Overvoltage category	II
Pollution degree	2
Rated voltage U_e $0 < U_e \leq 50$ V $150 V < U_e \leq 300$ V	Test voltage 700 V DC (secondary <-> PE) 2200 V DC (primary <-> secondary/PE)
Backup for power failures	> 20 ms at a repeat rate of 1 s, meets NAMUR recommendation NE 21
Power consumption 240 V AC	52 W

Power loss	20 W
Backup current	maximum of 100 µA when power off
Back-up battery (option)	1 x lithium AA, 3.6 V/2.3 Ah
Protective separation in accordance with IEC 61131-2	Yes

3.8 Power supply modules PS 407 10A (6ES7407-0KA01-0AA0) and PS 10A R (6ES7407-0KR00-0AA0)

Function

The power modules PS 407 10A (standard) and PS 407 10A R (for redundant operation, see Redundant power supply modules (Page 39)) are designed for connection to an 85-264 V AC network or an 88-300 V DC network, and supply 5 V/10 A DC and 24 V/1 A DC at the secondary side.

PS 407 10A and PS 407 10A R operator control and monitoring elements

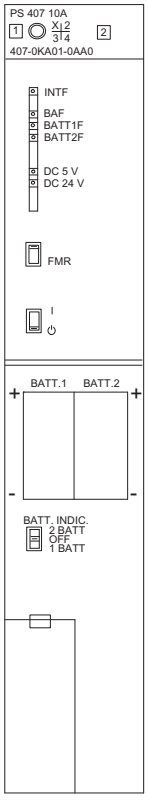

Figure 3-4 PS 407 10A and PS 407 10A R operator control and monitoring elements

Mains connection

An AC power plug is used with PS 407 10A and PS 407 10A R both for connection to an AC network and connection to a DC network.

Reverse polarity of L+ and L-

Reverse polarity of L+ and L with a supply voltage of DC 88 V to DC 300 V does not affect the function of the power supply. The connection must comply with the instructions in the installation manual.

PS 407 10A and PS 407 10A R technical specifications

Dimensions, weight and cable cross-sections	
Dimensions W x H x D (mm) Weight Cable cross-section Cable diameter	50x290x217 1.36 kg 3x1.5 mm^2 (stranded wire with wire end ferrule with insulating sleeve; use hose line only) 3 to 9 mm
Input variables	
Input voltage	
• Rated value	110/230 V DC 120/230 V AC
• Permitted range	88 to 300 V DC 85 to 264 V AC (wide range input)
Line frequency	
• Rated value	50/60 Hz
• Permitted range	47 to 63 Hz
Rated input current	
• With 120 V AC	0.9 A
• At 110 V DC	1.0 A
• At 230 V AC	0.5 A
• At 230 V DC	0.5 A
Inrush current	
• At 230 V AC	Peak value 230 A, full width at half maximum 200 µs peak value 63 A*, full width at half maximum 1 ms*
• At 300 V DC	Peak value 230 A, full width at half maximum 200 µs peak value 58 A*, full width at half maximum 1 ms*
Leakage current	< 3.5 mA
Output variables	
Output voltage	
• Rated values	5.1 V DC/24 V DC
Output current	
• Rated values	5 V DC: 10 A 24 V DC: 1.0 A
Parameters	
Protection class pursuant to IEC 60536	I, with protective conductor
Overvoltage category	II
Pollution degree	2
Rated voltage U_e $0 < U_e \leq 50$ V $150 V < U_e \leq 300$ V	Test voltage 700 V DC (secondary <-> PE) 2200 V DC (primary <-> secondary/PE)

Backup for power failures	> 20 ms at a repeat rate of 1 s, meets NAMUR recommendation NE 21
Power consumption	105 W, PS 407 10A from product version 5 105 W, PS 407 10A R from product version 7 95 W, PS 407 10A from product version 10
Power loss	29.7 W 20 W, PS 407 10A from product version 10
Backup current	maximum of 100 µA when power off
Back-up batteries (option)	2 x lithium AA, 3.6 V/2.3 Ah
Protective separation in accordance with IEC 61131-2	Yes
*PS 407 10A: from product version 5 * PS 407 10A R: from product version 7	

3.9 Power supply modules PS 407 10A (6ES7407-0KA02-0AA0) and PS 10A R (6ES7407-0KR02-0AA0)

Function

The power modules PS 407 10A (standard) and PS 407 10A R (for redundant operation, see Redundant power supply modules (Page 39)) are designed for connection to an 85-264 V AC network or an 88-300 V DC network, and supply 5 V/10 A DC and 24 V/1 A DC at the secondary side.

PS 407 10A and PS 407 10A R operator control and monitoring elements

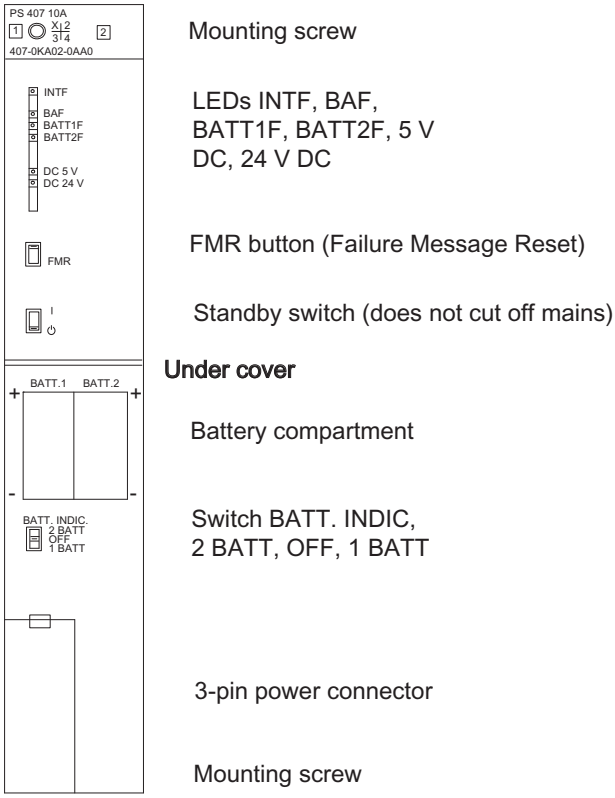

Figure 3-5 PS 407 10A and PS 407 10A R operator control and monitoring elements

Mains connection

An AC power plug is used with PS 407 10A and PS 407 10A R both for connection to an AC network and connection to a DC network.

Reverse polarity of L+ and L-

Reverse polarity of L+ and L with a supply voltage of 88 V DC to 300 V DC does not affect the function of the power supply. The connection must comply with the instructions in the installation manual.

PS 407 10A and PS 407 10A R technical specifications

Dimensions, weight and cable cross-sections	
Dimensions W x H x D (mm) Weight Cable cross-section	50x290x217 1.2 kg 3x1.5 mm^2 (stranded wire with wire end ferrule with insulating sleeve; use hose line only)
Input variables	
Input voltage	
• Rated value	120/230 V DC 120/230 V AC
• Permitted range	88 to 300 V DC 85 to 264 V AC (wide range input)
Line frequency	
• Rated value	50/60 Hz
• Permitted range	47 to 63 Hz
Rated input current	
• With 120 V AC	0.9 A
• With 120 V DC	1.0 A
• At 230 V AC	0.5 A
• At 230 V DC	0.5 A
Inrush current	
• At 230 V AC	Peak value 63 A, full width at half maximum 1 ms*
• At 300 V DC	Peak value 58 A, full width at half maximum 1 ms*
Leakage current	< 3.5 mA
Output variables	
Output voltage	
• Rated values	5.1 V DC/24 V DC
Output current	
• Rated values	5 V DC: 10 A 24 V DC: 1.0 A
Parameters	
Protection class pursuant to IEC 60536	I, with protective conductor
Overvoltage category	II
Pollution degree	2
Rated voltage U_e $0 < U_e \leq 50$ V $150 V < U_e \leq 300$ V	Test voltage 700 V DC (secondary <-> PE) 2200 V DC (primary <-> secondary/PE)
Backup for power failures	> 20 ms at a repeat rate of 1 s, meets NAMUR recommendation NE 21
Power consumption	95 W
Power loss	20 W
Backup current	maximum of 100 µA when power off

Back-up batteries (option)	2 x lithium AA, 3.6 V/2.3 Ah
Protective separation in accordance with IEC 61131-2	Yes

3.10 Power supply module PS 407 20A (6ES7407-0RA01-0AA0)

Function

The power module PS 407 20A is designed for connection to an 85-264 V AC network or an 88-300 V DC network, and supply 5 V/20 A DC and 24 V/1 A DC at the secondary side.

PS 407 20A operator control and monitoring elements

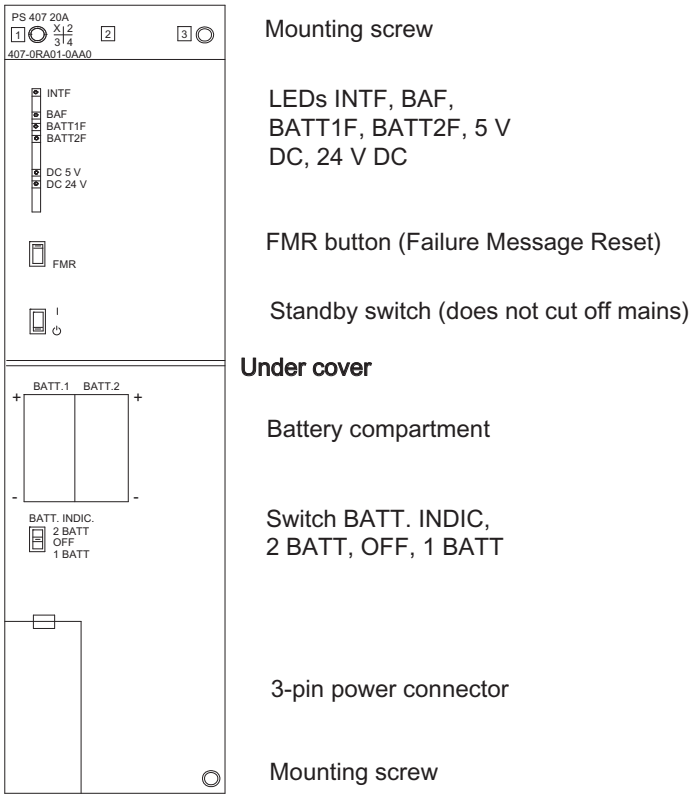

Figure 3-6 PS 407 20 A operator control and monitoring elements

Mains connection

An AC power plug is used with PS 407 20A both for connection to an AC network and for connection to a DC network.

Reverse polarity of L+ and L-

Reverse polarity of L+ and L with a supply voltage of 88 V DC to 300 V DC does not affect the function of the power supply. The connection must comply with the instructions in the installation manual.

PS 407 20A technical specifications

Dimensions, weight and cable cross-sections	
Dimensions W x H x D (mm) Weight Cable cross-section	75x290x217 2.2 kg 3x1.5 mm^2 (stranded wire with wire end ferrule with insulating sleeve; use hose line only)
Cable diameter	3 to 9 mm
Input variables	
Input voltage	
• Rated value	110/230 V DC 120/230 V AC
• Permitted range	88 to 300 V DC 85 to 264 V AC (wide range input)
Line frequency	
• Rated value	50/60 Hz
• Permitted range	47 to 63 Hz
Rated input current	
• At 120 V AC/110 V DC	1.5 A
• At 230 V AC/230 V DC	0.8 A
Inrush current	Peak value 88 A full width at half maximum 1.1 ms
Leakage current	< 3.5 mA
Output variables	
Output voltage	
• Rated values	5.1 V DC/24 V DC
Output current	
• Rated values	5 V DC: 20 A 24 V DC: 1.0 A
Parameters	
Protection class pursuant to IEC 60536	I, with protective conductor
Overvoltage category	II
Pollution degree	2
Rated voltage U_e $0 < U_e \leq 50$ V $150 V < U_e \leq 300$ V	Test voltage 700 V DC (secondary <-> PE) 2200 V DC (primary <-> secondary/PE)
Backup for power failures	> 20 ms at a repeat rate of 1 s, meets NAMUR recommendation NE 21
Power consumption	168 W
Power loss	44 W
Backup current	maximum of 100 µA when power off
Back-up batteries (option)	2 x lithium AA, 3.6 V/2.3 Ah
Protective separation in accordance with IEC 61131-2	Yes

3.11 Power supply module PS 407 20A (6ES7407-0RA02-0AA0)

Function

The power module PS 407 20A is designed for connection to an 85-264 V AC network or an 88-300 V DC network, and supply 5 V/20 A DC and 24 V/1 A DC at the secondary side.

PS 407 20A operator control and monitoring elements

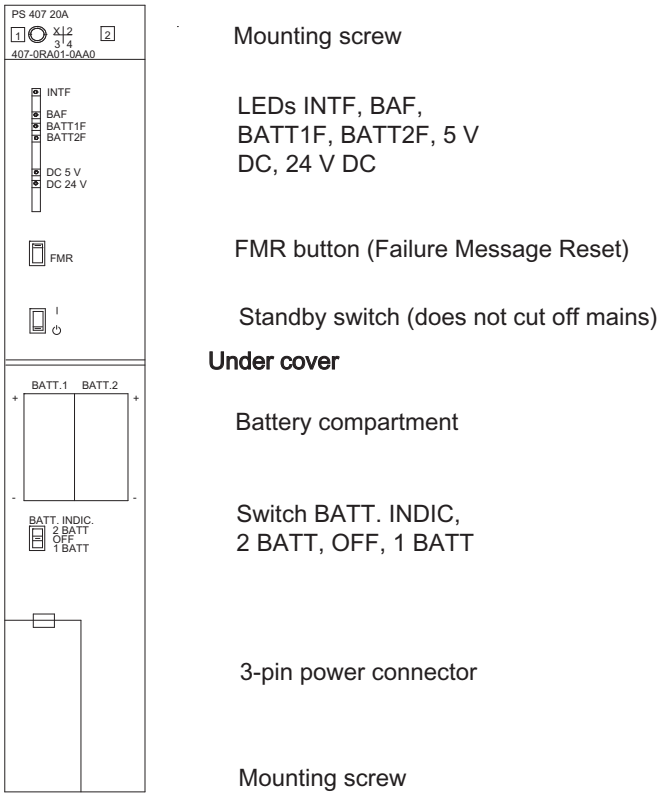

Figure 3-7 PS 407 20A power module operator control and monitoring elements

Mains connection

An AC power plug is used with PS 407 20A both for connection to an AC network and for connection to a DC network.

Reverse polarity of L+ and L-

Reverse polarity of L+ and L with a supply voltage of 88 V DC to 300 V DC does not affect the function of the power supply. The connection must comply with the instructions in the *installation manual*.

PS 407 20A technical specifications

Dimensions, weight and cable cross-sections	
Dimensions W x H x D (mm) Weight Cable cross-section	25x290x217 1.3 kg 3x1.5 mm^2 (stranded wire with wire end ferrule with insulating sleeve; use hose line only)
Cable diameter	3 to 9 mm
Input variables	
Input voltage	
• Rated value	120/230 V DC 120/230 V AC
• Permitted range	88 to 300 V DC 85 to 264 V AC (wide range input)
Line frequency	
• Rated value	50/60 Hz
• Permitted range	47 to 63 Hz
Rated input current	
• At 120 V AC/120 V DC	1.4 A
• At 230 V AC/230 V DC	0.7 A
Inrush current	Peak value 88 A full width at half maximum 1.1 ms
Leakage current	< 3.5 mA
Output variables	
Output voltage	
• Rated values	5.1 V DC/24 V DC
Output current	
• Rated values	5 V DC: 20 A 24 V DC: 1.0 A
Parameters	
Protection class pursuant to IEC 60536	I, with protective conductor
Overvoltage category	II
Pollution degree	2
Rated voltage U_e $0 < U_e \leq 50$ V $150 V < U_e \leq 300$ V	Test voltage 700 V DC (secondary <-> PE) 2200 V DC (primary <-> secondary/PE)
Backup for power failures	> 20 ms at a repeat rate of 1 s, meets NAMUR recommendation NE 21
Power consumption	158 W
Power loss	35 W
Backup current	maximum of 100 µA when power off
Back-up batteries (option)	2 x lithium AA, 3.6 V/2.3 Ah
Protective separation in accordance with IEC 61131-2	Yes

3.12 Power supply module PS 405 4A (6ES7405-0DA01-0AA0)

Function

The PS 405 4A power supply module is designed for connection to a DC line voltage of 19.2 to 72 VDC and supplies 5 VDC/4 A and 24 VDC/0.5 A on the secondary side.

Operator controls and indicators on the PS 405 4A

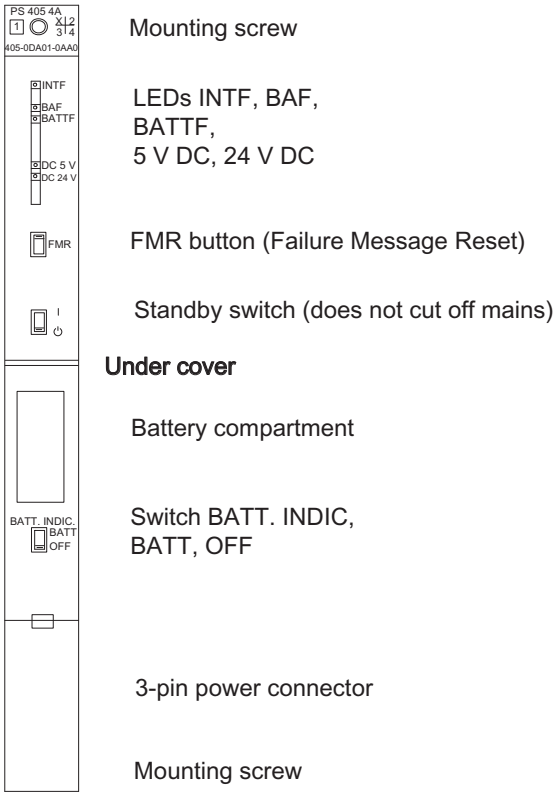

Figure 3-8 Operator controls and indicators on the PS 405 4A

Specifications of the PS 405 4A

Dimensions, weight, and cable cross-sections	
Dimensions W x H x D (mm)	25x290x217
Weight	0.76 kg
Cable cross-section	3 x 1.5 mm^2 (litz wire with wire end ferrule, use component conductor or flexible sheath cable)
Cable diameter	3 to 9 mm
Input parameters	
Input voltage	
• Nominal value	24 VDC / 48 V / 60 V

• Permissible range	Static: 19.2 to 72 VDC Dynamic: 18.5 to 75.5 VDC
Nominal input current	2/1/0.8 A
Overvoltage resistance	In accordance with DIN VDE 0160, curve B2
Output parameters	
Output voltages	
• Nominal values	5.1 / 24 VDC
Output currents	
Nominal values	5 VDC: 4 A 24 VDC: 0.5 A
Electrical parameters	
Protection class in accordance with IEC 60536	I, with protective conductor
Overvoltage category	II
Pollution degree	2
Nominal voltage U_e $0 < U_e \leq 50$ V $150 V < U_e \leq 300$ V	Test voltage 700 VDC (secondary <-> PE) 2200 VDC (primary <-> secondary/PE)
Buffering of power failures	>20 ms at a repeat rate of 1 s, complies with the NAMUR recommendation NE 21
Power consumption (24 VDC)	48 W
Power loss	16 W
Backup current	Max. 100 µA at power off
Backup battery (option)	1 x Lithium AA, 3.6 V/2.3 Ah
Protective separation to IEC 61131-2	Yes

3.13 Power supply module PS 405 4A (6ES7405-0DA02-0AA0)

Function

The power module PS 405 4A is designed for connection to a 19.2 to 72 V DC network, and supplies 5 V/4 A DC and 24 V/0.5 A DC at the secondary side.

PS 405 4A operator control and monitoring elements

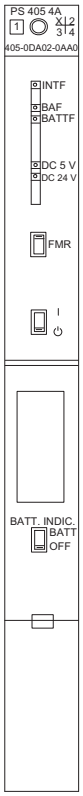

Mounting screw

LEDs INTF, BAF,
BATTF,
5 V DC, 24 V DC

FMR button (Failure Message Reset)

Standby switch (does not cut off mains)

Under cover

Battery compartment

Switch BATT. INDIC,
BATT, OFF

3-pin power connector

Mounting screw

Figure 3-9 PS 405 4A operator control and monitoring elements

PS 405 4A technical specifications

Dimensions, weight and cable cross-sections	
Dimensions W x H x D (mm)	25x290x217
Weight	0.76 kg
Cable cross-section	3x1.5 mm^2 (stranded wire with wire end ferrule; use single conductor or hose line)
Cable diameter	3 to 9 mm
Input variables	
Input voltage	
• Rated value	24 V/48 V/60 V DC

• Permitted range	Static: 19.2 to 72 V DC Dynamic: 18.5 to 75.5 V DC
Rated input current	2 A/1 A/0.8 A
Inrush current	Peak value 18 A Full width at half maximum 20 ms
Output variables	
Output voltage	
• Rated values	5.1 V DC/24 V DC
Output current	
Rated values	5 V DC: 4 A 24 V DC: 0.5 A
Parameters	
Protection class pursuant to IEC 60536	I, with protective conductor
Overvoltage category	II
Pollution degree	2
Rated voltage U_e $0 < U_e \leq 50$ V $150 V < U_e \leq 300$ V	Test voltage 700 V DC (secondary <-> PE) 2200 V DC (primary <-> secondary/PE)
Backup for power failures	> 20 ms at a repeat rate of 1 s, meets NAMUR recommendation NE 21
Power consumption (24 V DC)	48 W
Power loss	16 W
Backup current	maximum of 100 µA when power off
Back-up battery (option)	1 x lithium AA, 3.6 V/2.3 Ah
Protective separation in accordance with IEC 61131-2	Yes

3.14 Power supply modules PS 405 10A (6ES7405-0KA01-0AA0) and PS 405 10A R (405-0KR00-0AA0)

Function

The power modules PS 405 10A (standard) and PS 405 10A R (for redundant operation) are designed for connection to a 19.2-72 V DC network, and supply 5 V/10 A DC and 24 V/1 A DC at the secondary side.

PS 405 10A and PS 405 10A R operator control and monitoring elements

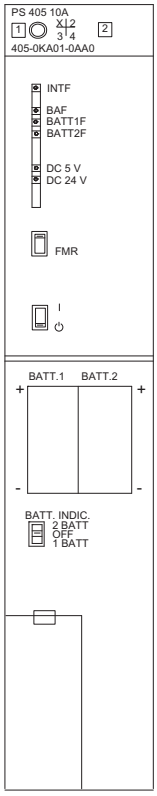

Mounting screws

LEDs INTF, BAF, BATT1F, BATT2F, 5 V DC, 24 V DC

FMR button (Failure Message Reset)

Standby switch (does not cut off mains)

Under cover

Battery compartment

Switch BATT. INDIC, 2 BATT, OFF, 1 BATT

3-pin power connector

Mounting screws

Figure 3-10 PS 405 10A and PS 405 10A R operator control and monitoring elements

PS 405 10A and PS 405 10A R technical specifications

Dimensions, weight and cable cross-sections	
Dimensions W x H x D (mm)	50x290x217
Weight	1.4 kg
Cable cross-section	3x1.5 mm² (stranded wire with wire end ferrule; use single conductor or hose line)
Cable diameter	3 to 9 mm
Input variables	
Input voltage	

• Rated value	24 V/48 V/60 V DC
• Permitted range	Static: 19.2 to 72 V DC Dynamic: 18.5 to 75.5 V DC
Rated input current	4.3 A/2.1 A/1.7 A
Inrush current	Peak value 18 A Full width at half maximum 20 ms
Output variables	
Output voltage • Rated values	 5.1 V DC/24 V DC
Output current • Rated values	 5 V DC: 10 A 24 V DC: 1.0 A
Parameters	
Protection class pursuant to IEC 60536	I, with protective conductor
Overvoltage category	II
Pollution degree	2
Rated voltage U_e $0 < U_e \leq 50$ V $150 < U_e \leq 300$ V	Test voltage 700 V DC (secondary <-> PE) 2200 V DC (primary <-> secondary/PE)
Backup for power failures	> 20 ms at a repeat rate of 1 s, meets NAMUR recommendation NE 21
Power consumption	104 W
Power loss	29 W
Backup current	maximum of 100 µA when power off
Back-up batteries (option)	2 x lithium AA, 3.6 V/2.3 Ah
Protective separation in accordance with IEC 61131-2	Yes

3.15 Power supply modules PS 405 10A (6ES7405-0KA02-0AA0) and PS 405 10A R (405-0KR02-0AA0)

Function

The power modules PS 405 10A (standard) and PS 405 10A R (for redundant operation) are designed for connection to a 19.2-72 V DC network, and supply 5 V/10 A DC and 24 V/1 A DC at the secondary side.

PS 405 10A and PS 405 10A R operator control and monitoring elements

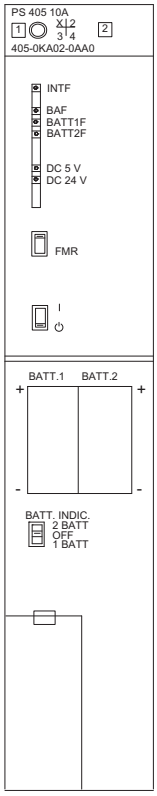

Mounting screw

LEDs INTF, BAF, BATT1F, BATT2F, 5 V DC, 24 V DC

FMR button (Failure Message Reset)

Standby switch (does not cut off mains)

Under cover

Battery compartment

Switch BATT. INDIC, 2 BATT, OFF, 1 BATT

3-pin power connector

Mounting screw

Figure 3-11 PS 405 10A and PS 405 10A R operator control and monitoring elements

PS 405 10A and PS 405 10A R technical specifications

Dimensions, weight and cable cross-sections	
Dimensions W x H x D (mm)	50x290x217
Weight	1.2 kg
Cable cross-section	3x1.5 mm^2 (stranded wire with wire end ferrule; use single conductor or hose line)
Cable diameter	3 to 9 mm
Input variables	
Input voltage	

• Rated value	24 V/48 V/60 V DC
• Permitted range	Static: 19.2 to 72 V DC Dynamic: 18.5 to 75.5 V DC
Rated input current	4.0 A/2.0 A/1.6 A
Inrush current	Peak value 18 A Full width at half maximum 20 ms
Output variables	
Output voltage • Rated values	 5.1 V DC/24 V DC
Output current • Rated values	 5 V DC: 10 A 24 V DC: 1.0 A
Parameters	
Protection class pursuant to IEC 60536	I, with protective conductor
Overvoltage category	II
Pollution degree	2
Rated voltage U_e $0 < U_e \leq 50$ V $150 < U_e \leq 300$ V	Test voltage 700 V DC (secondary <-> PE) 2200 V DC (primary <-> secondary/PE)
Backup for power failures	> 20 ms at a repeat rate of 1 s, meets NAMUR recommendation NE 21
Power consumption	95 W
Power loss	20 W
Backup current	maximum of 100 µA when power off
Back-up batteries (option)	2 x lithium AA, 3.6 V/2.3 Ah
Protective separation in accordance with IEC 61131-2	Yes

3.16 Power supply module PS 405 20A (6ES7405-0RA01-0AA0)

Function

The power module PS 405 20A is designed for connection to a 19.2-72 V DC network, and supplies 5 V/20 A DC and 24 V/1 A DC at the secondary side.

PS 405 20A operator control and monitoring elements

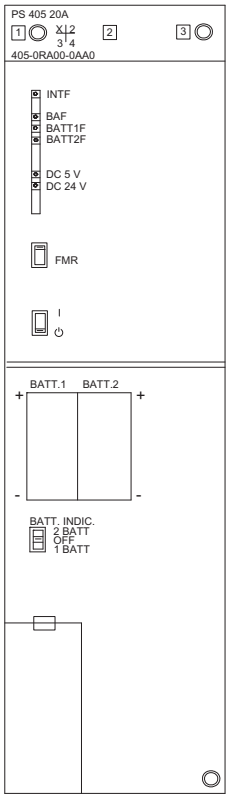

Mounting screws

LEDs INTF, BAF, BATT1F, BATT2F, 5 V DC, 24 V DC

FMR button (Failure Message Reset)

Standby switch (does not cut off mains)

Under cover

Battery compartment

Switch BATT. INDIC, 2 BATT, OFF, 1 BATT

3-pin power connector

Mounting screws

Figure 3-12 PS 405 20A operator control and monitoring elements

PS 405 20A technical specifications

Dimensions, weight and cable cross-sections	
Dimensions W x H x D (mm)	75x290x217
Weight	2.2 kg
Cable cross-section	3x1.5 mm^2 (stranded wire with wire end ferrule; use single conductor or hose line)
Cable diameter	3 to 9 mm
Input variables	
Input voltage	
• Rated value	24 V/48 V/60 V DC

• Permitted range	Static: 19.2 to 72 V DC Dynamic: 18.5 to 75.5 V DC
Rated input current	7.3 A/3.45 A/2.75 A
Inrush current	Peak value 56 A Full width at half maximum 1.5 ms
Output variables	
Output voltage • Rated values	 5.1 V DC/24 V DC
Output current • Rated values	 5 V DC: 20 A 24 V DC: 1.0 A
Parameters	
Protection class pursuant to IEC 60536	I, with protective conductor
Overvoltage category	II
Pollution degree	2
Rated voltage U_e $0 < U_e \leq 50$ V $150 V < U_e \leq 300$ V	Test voltage 700 V DC (secondary <-> PE) 2200 V DC (primary <-> secondary/PE)
Backup for power failures	> 20 ms at a repeat rate of 1 s, meets NAMUR recommendation NE 21
Power consumption	175 W
Power loss	51 W
Backup current	maximum of 100 µA when power off
Back-up batteries (option)	2 x lithium AA, 3.6 V/2.3 Ah
Protective separation in accordance with IEC 61131-2	Yes

3.17 Power supply module PS 405 20A (6ES7405-0RA02-0AA0)

Function

The power module PS 405 20A is designed for connection to a 19.2-72 V DC network, and supplies 5 V/20 A DC and 24 V/1 A DC at the secondary side.

PS 405 20A operator control and monitoring elements

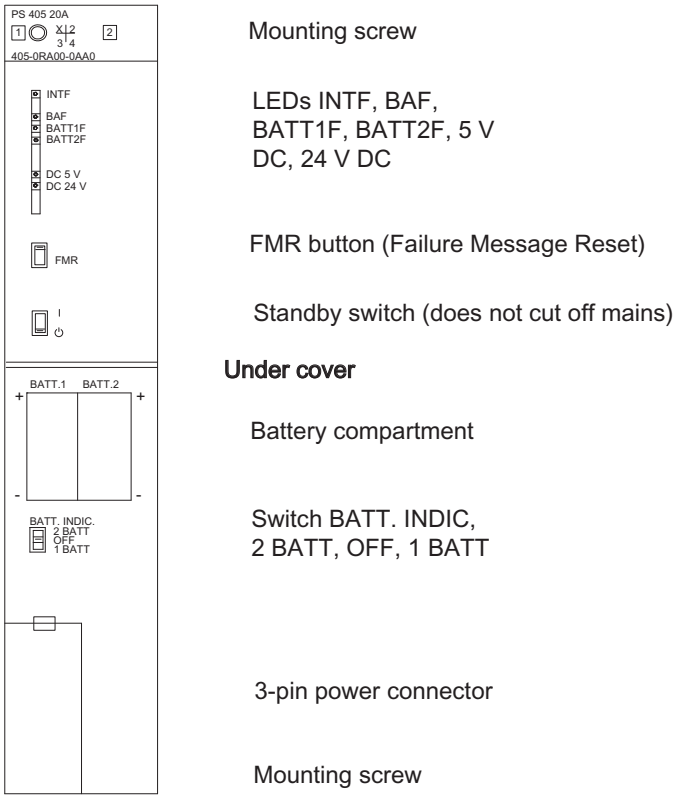

Figure 3-13 PS 405 20A operator control and monitoring elements

PS 405 20A technical specifications

Dimensions, weight and cable cross-sections	
Dimensions W x H x D (mm)	50x290x217
Weight	1.3 kg
Cable cross-section	3x1.5 mm^2 (stranded wire with wire end ferrule; use single conductor or hose line)
Cable diameter	3 to 9 mm
Input variables	
Input voltage	
• Rated value	24 V/48 V/60 V DC

• Permitted range	Static: 19.2 to 72 V DC Dynamic: 18.5 to 75.5 V DC
Rated input current	7.0 A/3.2 A/2.5 A
Inrush current	Peak value 56 A Full width at half maximum 1.5 ms
Output variables	
Output voltage • Rated values	 5.1 V DC/24 V DC
Output current • Rated values	 5 V DC: 20 A 24 V DC: 1.0 A
Parameters	
Protection class pursuant to IEC 60536	I, with protective conductor
Overvoltage category	II
Pollution degree	2
Rated voltage U_e $0 < U_e \leq 50$ V $150 V < U_e \leq 300$ V	Test voltage 700 V DC (secondary <-> PE) 2200 V DC (primary <-> secondary/PE)
Backup for power failures	> 20 ms at a repeat rate of 1 s, meets NAMUR recommendation NE 21
Power consumption	168 W
Power loss	44 W
Backup current	maximum of 100 µA when power off
Back-up batteries (option)	2 x lithium AA, 3.6 V/2.3 Ah
Protective separation in accordance with IEC 61131-2	Yes

Digital modules

4

4.1 Module overview

Characteristics of digital modules

The tables below summarize the essential characteristics of the digital modules. This overview supports you in selecting a module to suit your requirements.

Table 4-1 Digital input modules: overview of features

Features	SM 421; DI 32xDC 24 V (-1BL0x-)	SM 421; DI 16xDC 24 V (-7BH0x-)	SM 421; DI 16xAC 120 V (-5EH00-)	SM 421; DI 16xUC 24/60 V (-7DH00-)	SM 421; DI 16xUC 120/230 V (-1FH00-)	SM 421; DI 16xUC 120/230 V (-1FH20-)	SM 421; DI 32xUC 120 V (-1EL00-)
Number of inputs	32 DI; isolated in groups of 32	16 DI; isolated in groups of 8	16 DI; isolated in groups of 1	16 DI; isolated in groups of 1	16 DI; isolated in groups of 4	16 DI; isolated in groups of 4	32 DI; isolated in groups of 8
Nominal input voltage	24 VDC	24 VDC	120 VAC	24 to 60 VUC	120 VAC/ 230 VDC	120/230 VUC	120 VAC/DC
Suitable for...	Switches; 2-wire proximity switches (BEROs)						
Configurable diagnostics	No	Yes	No	Yes	No	No	No
Diagnostic interrupt	No	Yes	No	Yes	No	No	No
Hardware interrupt at edge transition:	No	Yes	No	Yes	No	No	No
Adjustable input delays	No	Yes	No	Yes	No	No	No
Substitution value output	-	Yes	-	-	-	-	-
Special features	High packaging density	Quick and with interrupt capability	Channel-specific isolation	Interrupt capability with low, variable voltages	For high, variable voltages	For high, variable voltages Input characteristic curve in accordance with IEC 61131-2	High packaging density

Table 4-2 Digital output modules: overview of features

Features	SM 422; DO 16xDC 24 V / 2 A (-1BH1x)	SM 422; DO 16xDC 20-125 V/ 1.5 A (-5EH10)	SM 422; DO 32xDC 24 V / 0.5 A (-1BL00)	SM 422; DO 32xDC 24 V / 0.5 A (-7BL00)	SM 422; DO 8xAC 120/230 V/ 5 A (-1FF00)	SM 422; DO 16xAC 120/230 V/ 2 A (-1FH00)	SM 422; DO 16xAC 20-120 V/ 2 A (-5EH00)
Number of outputs	16 DO; isolated in groups of 8	16 DO; isolated and reverse polarity protection in groups of 8	32 DO; isolated in groups of 32	32 DO; isolated in groups of 8	8 DO; isolated in groups of 1	16 DO; isolated in groups of 4	16 DO; isolated in groups of 1
Output current	2 A	1.5 A	0.5 A	0.5 A	5 A	2 A	2 A
Nominal load voltage	24 VDC	20 to 125 VDC	24 VDC	24 VDC	120/230 VAC	120/230 VAC	20 to 120 VAC
Configurable diagnostics	No	Yes	No	Yes	No	No	Yes
Diagnostic interrupt	No	Yes	No	Yes	No	No	Yes
Substitution value output	No	Yes	No	Yes	No	No	Yes
Special features	For high currents	For variable voltages	High packaging density	Particularly quick and with interrupt capability	For high currents with channel- specific isolation	-	For variable currents with channel-specific isolation

Table 4-3 Relay output module: overview of features

Features	SM 422; DO 16 x UC 30/230 V/Rel. 5 A (-1HH00)
Number of outputs	16 outputs, isolated in groups of 8
Load voltage	125 VDC 230 VAC
Special features	-

4.2 Steps in selecting and commissioning the digital module

Introduction

The following table contains the tasks that you have to perform one after the other to commission digital modules successfully.

The sequence of steps is a suggestion, but you can perform individual steps either earlier or later (for example, assign parameters to the module) or install, commission etc. other modules in between times.

Overview of steps in selecting and commissioning the digital module

Step	Procedure	
1	Select the module.	Section 4.1 (Page 81) and special sections for modules beginning with Section 4.7 (Page 95)
2	Mount the module in the rack.	"Installing" section in the *Automation System S7-400, Hardware and Installation* manual
3	Assigning module parameters	Section 4.3 (Page 83) and special sections for modules beginning with Section 4.7
4	Commissioning the configuration	"Commissioning" section in the *Automation System S7-400, Hardware and Installation* manual
5	Analyzing the configuration if commissioning is not successful	Section 4.4 (Page 86)

4.3 Assigning parameters to digital modules

4.3.1 Parameters

Introduction

Digital modules may have different features. You can configure the features of some modules.

Tools for parameter assignment

You assign parameters to digital modules in *STEP 7*.

After you have defined all parameters, download these from your programming device to the CPU. On a transition from STOP > RUN mode, the CPU then transfers the parameters to the individual digital modules.

Static and dynamic parameters

The parameters are divided into static and dynamic parameters.

Static parameters are passed to digital modules after a STOP > RUN transition of the CPU, as described above.

You may also edit dynamic parameters in the active user program of an S7 PLC using SFCs. However, the parameters set in *STEP 7* will be applied again after a RUN > STOP, STOP > RUN transition of the CPU. You will find a description of the parameter assignment of modules in the user program in the Appendix.

Configuration in RUN (CiR)

CiR (Configuration in RUN) is a method you can use to modify your system or edit the parameters of individual modules. These changes are made while your system is in operation, that is, your CPU will stay in RUN over a maximum of 2.5 seconds while these changes are applied.

For detailed information on this topic, refer to the "Configuration in RUN by means of CiR" manual. This manual is found, for example, as a file in PDF format on the STEP 7 CD supplied.

4.3.2 Parameters of digital input modules

Overview

The configurable digital input modules use a subset of the parameters and ranges of values listed in the table below, depending on functionality. For information on subsets "supported" by specific digital modules, refer to the chapter dealing with the relevant module. Do not forget that some digital modules have different input delays after parameter assignment.

The defaults apply if you have not set any parameters in *STEP 7*.

Table 4-4 Parameters of digital input modules

Parameters	Value range	Default[2]	Parameter type	Scope
Enable				
• Diagnostic interrupt[1]	Yes/no	No	Dynamic	Module
• Hardware interrupt[1]	Yes/no	No		
• Destination CPU for interrupt	1 to 4	-	Static	Module
Diagnostics				
• Wire break	Yes/no	No	Static	Channel
• No load voltage L+/sensor supply	Yes/no	No		
Hardware interrupt trigger				
• Positive edge	Yes/no	No	Dynamic	Channel
• Negative edge	Yes/no	No		
Input delay	0.1 ms (DC) 0.5 ms (DC) 3 ms (DC) 20 ms (DC/AC)	3 (DC)	Static	Channel
Reaction to error	Set substitution value (SSV) Keep last value (KLV)	SV	Dynamic	Module
Set substitution value "1"	Yes/no	No	Dynamic	Channel [3]

[1] If you use the module in ER-1/ER-2, you must set this parameter to "No" because the interrupt lines are not available in ER-1/ER-2.

[2] Only in the CR (central rack) is it possible to start up the digital modules with the default settings and without support from HWCONFIG.

[3] Channels not selected for substitute value "1" are assigned substitute value "0".

4.3.3 Parameters of digital output modules

Overview

The configurable digital output modules use a subset of the parameters and ranges of values listed in the table below, depending on the functionality. For information on subsets "supported" by specific digital modules, refer to the section dealing with the relevant module beginning with section 4.7.

The defaults apply if you have not set any parameters in *STEP 7*.

Table 4-5 Parameters of digital output modules

Parameters	Value range	Default[2]	Parameter type	Scope
Enable				
• Diagnostic interrupt[1]	Yes/no	No	Dynamic	Module
• Destination CPU for interrupt	1 to 4	-	Static	Module
Reaction to CPU STOP	Substitute a value (SV) Keep last value (KLV)	SV	Dynamic	Module
Diagnostics				
• Wire break	Yes/no	No	Static	Channel
• Load voltage L+ missing	Yes/no	No		
• Short-circuit to M	Yes/no	No		
• Short-circuit to L+	Yes/no	No		
• Fuse blown	Yes/no	No		
Set substitution value "1"	Yes/no	No	Dynamic	Channel [3]

[1] If you use the module in ER-1/ER-2, you must set this parameter to "No" because the interrupt lines are not available in ER-1/ER-2.

[2] Only in the CR (central rack) is it possible to start up the digital modules with the default settings and without support from HWCONFIG.

[3] Channels not selected for substitute value "1" are assigned substitute value "0".

4.4 Diagnostics for digital modules

4.4.1 General information about diagnostic messages

Programmable and non-programmable diagnostic messages

Using the diagnostics function, we make a distinction between programmable and non-programmable diagnostic messages.

You only obtain programmable diagnostic messages if you have enabled the diagnostics using the relevant parameters. You perform parameter assignment in the "Diagnostics" tab in *STEP 7*, see section 6.7.

Digital modules always return non-programmable diagnostic messages, irrespective of diagnostics being enabled.

Reactions to diagnostic messages in STEP 7

Actions initiated by diagnostic messages:

- The diagnostic message is entered in the diagnostics of the digital module, forwarded to the CPU and can be read out by the user program.
- The fault LED on the digital module lights up.
- If you have set "Enable diagnostic interrupt" in *STEP 7*, a diagnostic interrupt is triggered and OB 82 is called, see section 5.5.

Reading diagnostic messages

You can read detailed diagnostic messages using SFCs in the user program (refer to the appendix "Diagnostic data of signal modules").

You can view the cause of the error in *STEP 7* in the module diagnostics (refer to the *online help for STEP 7*).

Diagnostics using the INTF and EXTF LEDs

Some digital modules indicate faults by means of their two fault LEDs INTF (internal fault) and EXTF (external fault). The LEDs go out when all the internal and external faults have been eliminated.

Refer to the specifications of the modules beginning with section 5.7 to find out which digital modules have these fault LEDs.

See also

General information about parameter assignment (Page 196)

Interrupts of the digital modules (Page 91)

4.4.2 Diagnostic messages of the digital modules

Overview

The table below gives an overview of the diagnostic messages for the digital modules with diagnostics capability.

You can find out which diagnostic message each module is capable of in the Appendix entitled "Diagnostic data of the signal modules".

Table 4-6 Diagnostic messages of the digital modules

Diagnostic message	LED	Scope of diagnostics	Programmable
Module error	INTF/EXTF	Module	No
Internal error	INTF	Module	No
External error	EXTF	Module	No
Channel error	INTF/EXTF	Module	No
External auxiliary voltage missing	EXTF	Module	No
Front connector missing	EXTF	Module	No
No module parameters	INTF	Module	No
Incorrect parameters	INTF	Module	No
Channel information available	INTF/EXTF	Module	No
STOP mode	-	Module	No
Internal voltage failure	INTF	Module	No
EPROM error	INTF	Module	No
Hardware interrupt lost	INTF	Module	No
Parameter assignment error	INTF	Channel	No
Short-circuit to M	EXTF	Channel	Yes
Short-circuit to L+	EXTF	Channel	Yes
Wire break	EXTF	Channel	Yes
Fuse blown	INTF	Channel	Yes
Sensor supply missing	EXTF	Channel/channel group	Yes
Load voltage L+ missing	EXTF	Channel/channel group	Yes

Note

Prerequisite for detecting errors indicated by programmable diagnostic messages is an appropriate configuration of the digital module in STEP 7.

4.4.3 Causes of errors and remedies for digital modules

Overview

Table 4-7 Diagnostic messages of the digital modules, causes of errors and remedies

Diagnostic message	Possible cause of error	Remedy
Module error	Any, the module has detected an error.	-
Internal error	Module has detected an error within the automation system.	-
External error	Module has detected an error outside of the automation system.	-
Channel error	Indicates that only certain channels are faulty.	-
External auxiliary voltage missing	Voltage required to operate the module is missing (load voltage, sensor supply).	Supply missing voltage
Front connector missing	Jumper between connections 1 and 2 in the front connector is missing.	Install jumper
No module parameters	Module requires information whether it should operate with default system parameters or with your parameters.	Message queued after power-on until parameter transmission by the CPU has been completed; configure the module, as required.
Incorrect parameters	One parameter, or the combination of parameters, is not plausible.	Reassign parameters to the module
Channel information available	Channel error; module can provide additional channel information.	-
STOP mode	No parameters have been assigned to the module and the first module cycle has not been completed.	If after rebooting the CPU all the input values are in the intermediate memory, this message is reset.
Internal voltage failure	Module is defective	Replace the module
EPROM error	Module is defective	Replace the module
Hardware interrupt lost	The module cannot send an interrupt, since the previous interrupt was not acknowledged; possible configuration error.	Change the interrupt handling in the CPU (change priority for interrupt OB; shorten interrupt program).
Parameter assignment error	Incorrect parameters transferred to the module (for example, impossible input delay); the corresponding channel is deactivated.	Reassign parameters to the module
Short-circuit to M	Overload at output	Eliminate overload
	Short-circuit of output to M	Check the wiring of the outputs.
Short-circuit to L+	Short-circuit of output to L+	Check the wiring of the outputs.

Diagnostic message	Possible cause of error	Remedy
Wire break	Lines interrupted	Connect the cable
	No external sensor supply	Wire sensors with10 to 18 kΩ.
	Channel not connected (open)	Disable the "Diagnostics – Wire break" parameter for the channel in STEP 7.
		Wire the channel
Fuse blown	One or more fuses on the module has blown and caused this fault.	Remove the overload and replace the fuse.
Sensor supply missing	Overload at sensor supply	Eliminate overload
	Short-circuit of sensor supply to M	Eliminate the short-circuit.
Load voltage L+ missing	Power supply L+ to module missing	Feed in supply voltage L+.
	Fuse in module is defective	Replace the module

4.5 Interrupts of the digital modules

Introduction

This section describes the interrupt behavior of the digital modules. There are two types of interrupt:

- Diagnostic interrupt
- Hardware interrupt

Note that not all digital modules have interrupt capability or they are only capable of a subset of the interrupts described here. For information on the digital modules that support interrupts, refer to their specifications.

For detailed information on the OBs and SFCs mentioned below, refer to the *STEP 7 Online Help*.

Enabling interrupts

The interrupts are not preset - in other words, they are inhibited without appropriate parameter assignment. Interrupts are enabled in *STEP 7*.

Special feature: The module is inserted in ER-1/ER-2

Note

If you use the digital module in ER-1/ER-2, you must set the parameters for enabling all the interrupts to "No" because the interrupt lines are not available in ER-1/ER-2.

Diagnostic interrupt

When diagnostic interrupts are enabled, incoming error events (initial occurrence) and outgoing error events (error is cleared) are reported by means of an interrupt.

The CPU interrupts user program execution, and executes diagnostic interrupt OB82.

In the user program, you can call SFC 51 or SFC 59 in OB 82 to obtain more detailed diagnostic information from the module.

The diagnostic information is consistent until such time as OB 82 is exited. When OB 82 is exited, the diagnostic interrupt is acknowledged on the module.

Hardware interrupt

A digital input module can trigger a hardware interrupt for each channel at a rising or falling edge, or both, of a signal status change.

You perform parameter assignment for each channel separately. The parameters can be changed at any time (in RUN mode in the user program.)

Pending hardware interrupts trigger hardware interrupt processing in the CPU (OB 40 to OB 47). The CPU interrupts the execution of the user program or the priority classes with low priority.

In the user program of the hardware interrupt OB (OB 40 to OB 47) you can specify how the programmable controller is to respond to an edge change. The module acknowledges the hardware interrupt when the program exits the hardware interrupt OB.

For each channel the digital input module can buffer an interrupt that has not been triggered. If no run levels of a higher priority class are pending processing, the CPU processes the buffered interrupts (of all modules) in the order of their occurrence.

Hardware interrupt lost

A "Hardware interrupt lost" diagnostics interrupt is generated, if a successive interrupt occurs at the same channel before the CPU has processed the previously buffered interrupt.

The CPU does not register any further interrupts at this channel unless it has completed processing of the stacked interrupts of the same channel.

Interrupt-triggering channels

The interrupt-triggering channels are stored in the local data of the hardware interrupt OBs (in the start information of the corresponding OB). The start information is two words long (bits 0 to 31). The bit number is the channel number. Bits 16 to 31 are not assigned.

See also

General information about parameter assignment (Page 196)

4.6 Input characteristic curve for digital inputs

IEC 61131, type 1 and type 2

The IEC 61131 standard requires the following for the input current:

- In the case of type 2, an input current of ≥ 2 mA already at + 5 V
- In the case of type 1, an input current of ≥ 0.5 mA already at + 5 V

EN 60947-5-2, 2-wire BEROs

The standard for BEROs (EN 60947-5-2) specifies that there can be a current of ≤ 1.5 mA for BEROs in the "0" signal state.

The input current of the module in the "0" signal state is decisive for the operation of 2-wire BEROs. This must be in accordance with BERO requirements.

Input characteristic curve for digital inputs

As long as the current flowing into the module remains ≤ 1.5 mA, the module recognizes this as a "0" signal.

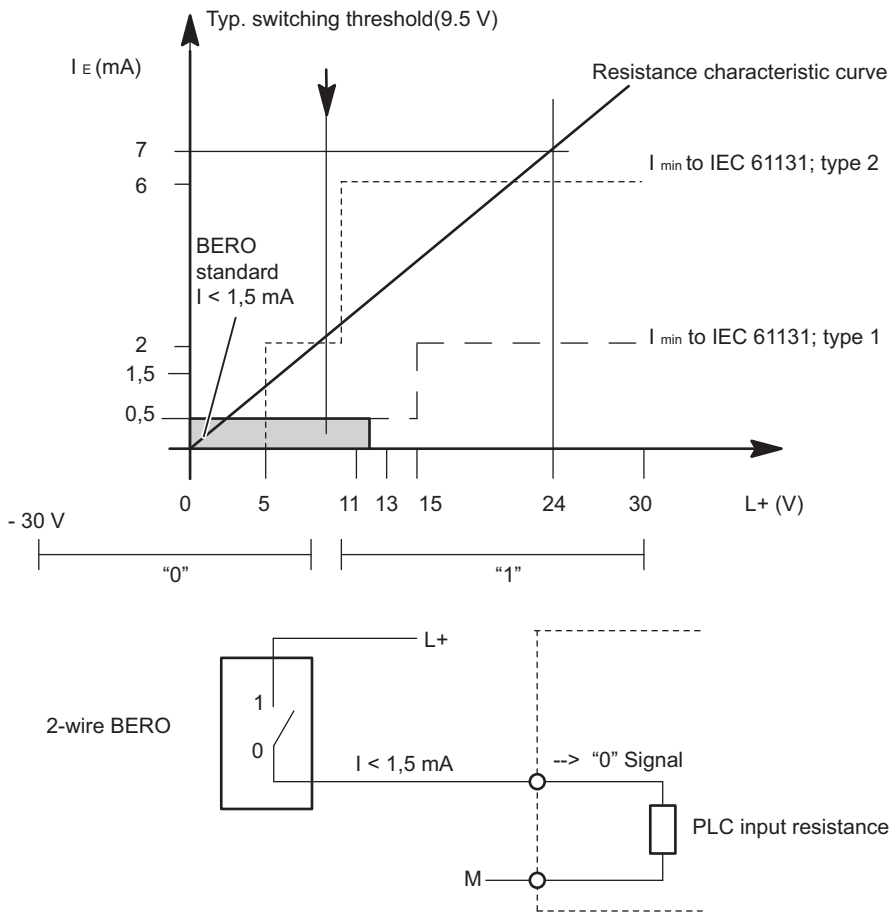

Figure 4-1 Input characteristic curve for digital inputs

4.7 Digital input module SM 421; DI 32 x DC 24 V (6ES7421-1BL01-0AA0)

Properties

Key properties of the SM 421; DI 32 x 24 V DC:

- 32 inputs, isolated in a group of 32
- Rated input voltage 24 V DC
- Suitable for switches and 2-/3-/4-wire proximity switches (BEROs, IEC 61131; type 1)

The status LEDs indicate the process status.

Connection and circuit diagram for SM 421; DI 32 x 24 V DC

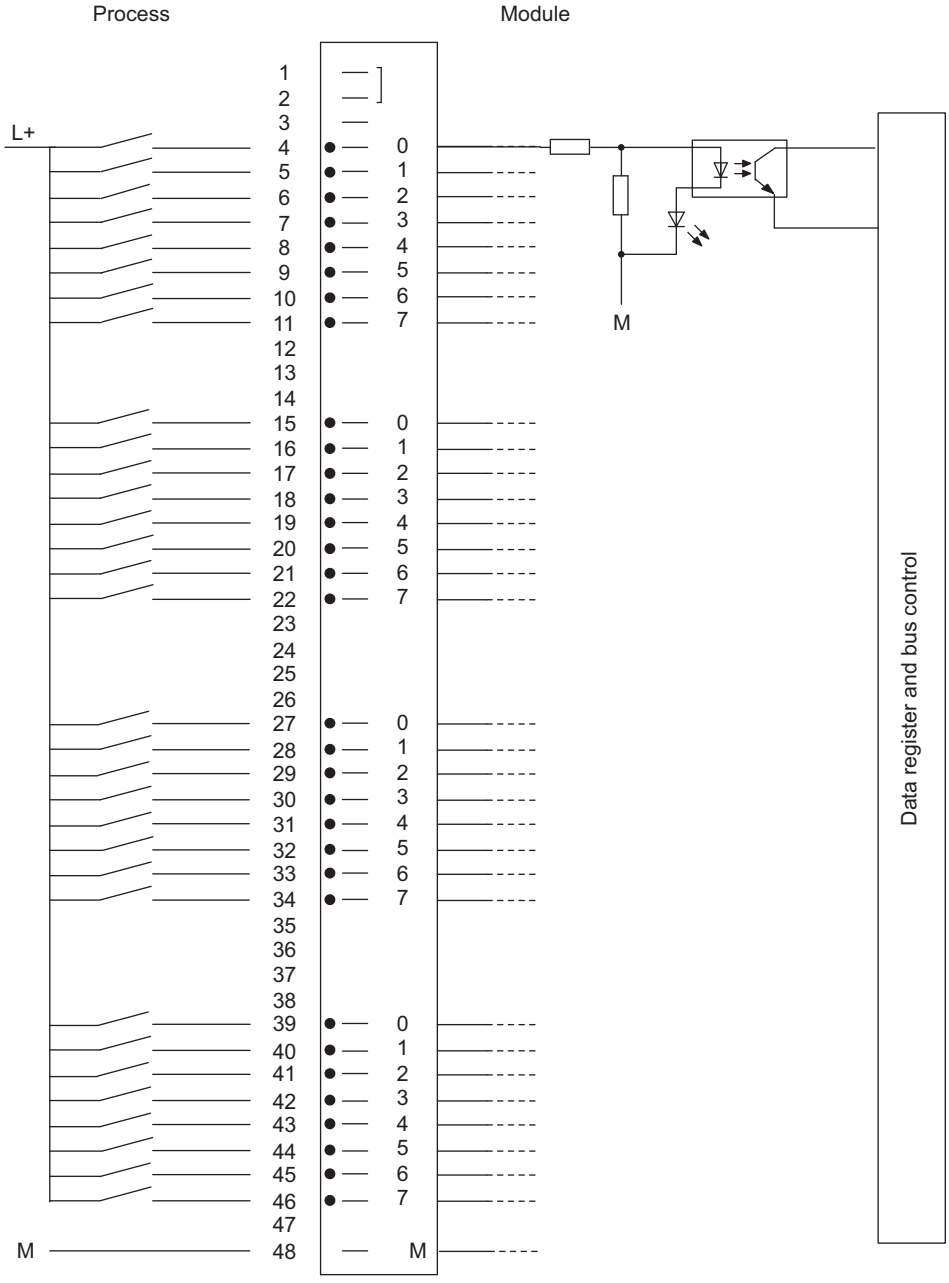

Figure 4-2 Connection and circuit diagram for SM 421; DI 32 x 24 V DC

Technical specifications for SM 421; DI 32 x DC 24 V

Dimensions and weight	
Dimensions W x H x D (mm)	25 x 290 x 210
Weight	ca. 500 g
Module-specific data	

Number of inputs	32
Cable length	
• unshielded	Maximum 600 m
• shielded	max. 1000 m
Voltage, current and potential	
Rated supply voltage of electronics L+	Not required
Number of inputs that can be enabled simultaneously	32
Electrical isolation	
• Between channels and backplane bus	Yes
• Between channels	No
Permissible potential difference	
• Between different circuits	60 V DC/30 V AC (SELV)
Insulation tested at	
• Channels to backplane bus and load voltage L+	500 Vac or 707 Vdc (type test)
Current consumption	
• from backplane bus (5 V)	20 mA maximum
Module power loss	Typ. 6 W
Status, interrupts, diagnostics	
Status display	Green LED per channel
Interrupts	None
Diagnostic functions	None
Substitute values can be connected	No
Data for selecting a sensor	
Input voltage	
• Rated value	24 V DC
• For "1" signal	13 to 30 V
• For "0" signal	-30 to 5 V
Input current	
• For "1" signal	7 mA
Input delay	
• For "0" to "1"	1.2 to 4.8 ms
• For "1" to "0"	1.2 to 4.8 ms
Input characteristic	In accordance with IEC 61131-2; type 1
Connection of 2-wire BEROs	Possible
• Permissible quiescent current	Maximum 1.5 mA

4.8 Digital input module SM 421; DI 16 x DC 24 V (6ES7421-7BH01-0AB0)

4.8.1 Features

Overview

SM 421; DI 16 x 24 V DC has the following properties:

- 16 inputs, isolated in 2 groups of 8
- Rapid signal processing Input filter from 50 µs
- Rated input voltage 24 V DC
- Suitable for switches and 2-/3-/4-wire proximity switches (BEROs, IEC 61131-2; type 2)
- 2 short-circuit proof sensor supplies for 8 channels each
- External redundant supply for sensor supply possible
- Status display "Sensor voltage (Vs) O.K."
- Group fault display for internal faults (INTF) and external faults (EXTF)
- Configurable diagnostics
- Configurable diagnostic interrupt
- Configurable hardware interrupts
- Configurable input delays
- Configurable substitute values in the input range

The status LEDs indicate the process status.

Note

The module spare parts are compatible with SM 421 module; DI 16 x 24 V DC; (6ES7 421-7BH00-0AB0)

To use the new function "Input delay 50 µs", you require STEP7 from V 5.2.

Connection and circuit diagram for SM 421; DI 16 x 24 V DC

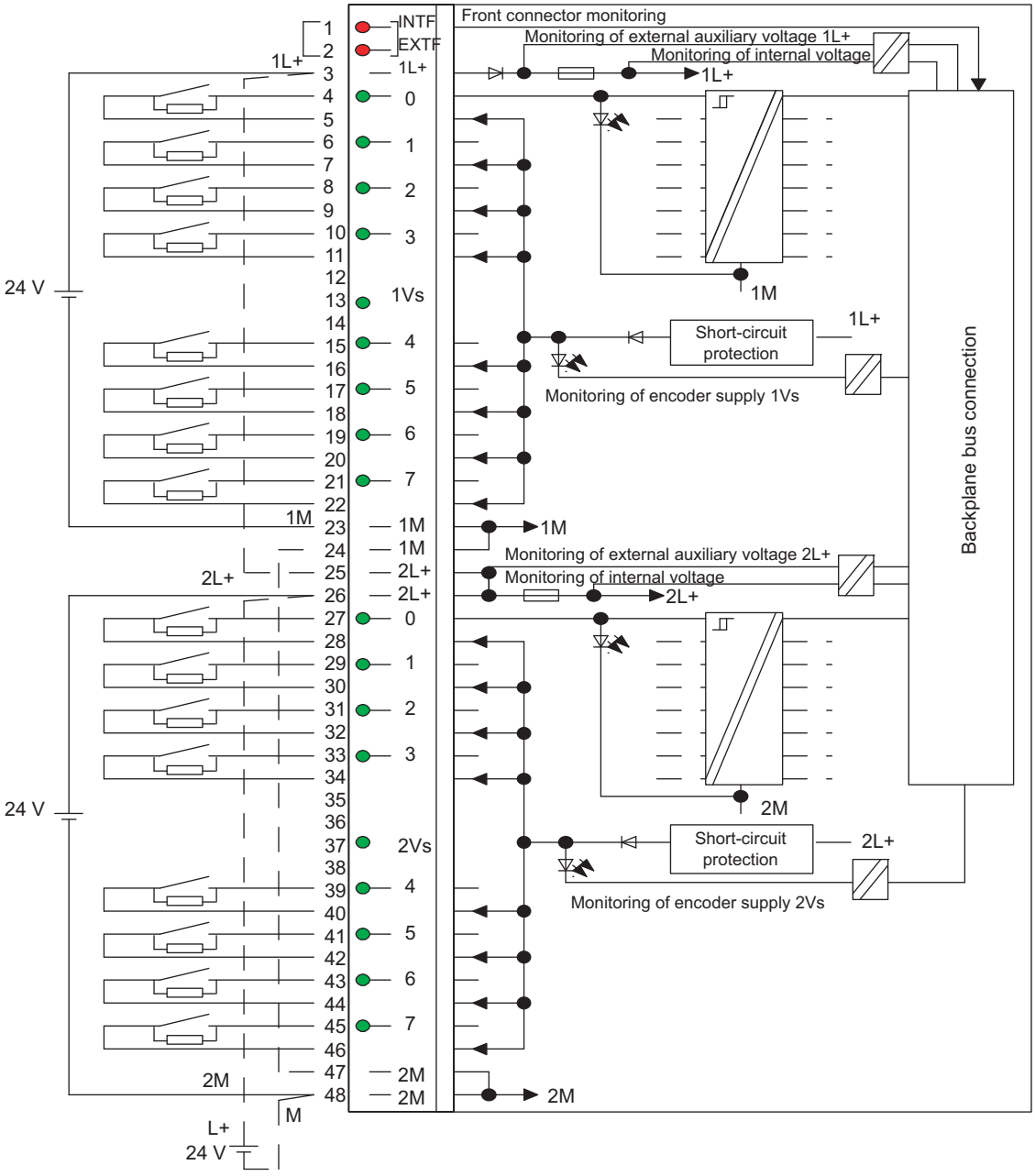

Figure 4-3 Connection and circuit diagram for SM 421; DI 16 x 24 V DC

Connection diagram for redundant sensor supply

The image below shows how sensors can be supplied with a redundant voltage source over Vs (e.g. through another module).

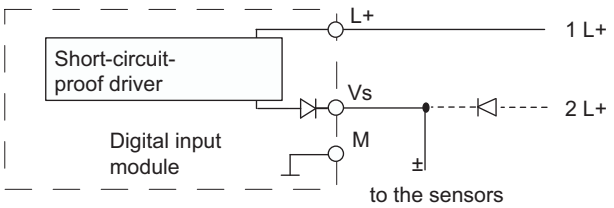

Figure 4-4 Connection diagram for redundant sensor supply for SM 421; DI 16 x 24 V DC

Technical specifications for SM 421; DI 16 x 24 V DC

Dimensions and weight	
Dimensions W x H x D (mm)	25 x 290 x 210
Weight	ca. 600 g
Module-specific data	
Number of inputs	16
Cable length	
• Unshielded, input delay 0.1 ms 0.5 ms 3 ms	 20 m maximum 50 m maximum 600 m maximum
• Shielded, input delay 0.1 ms 0.5 ms 3 ms	 30 m maximum 70 m maximum 1000 m maximum
Voltage, current and potential	
Rated supply voltage of electronics and sensor L+	24 V DC
• Reverse polarity protection	Yes
Number of inputs that can be enabled simultaneously	16
Electrical isolation	
• Between channels and backplane bus	Yes
• Between channels and electronics power supply	No
• Between channels in groups of	Yes 8
Permissible potential difference	
• Between different circuits	60 V DC/30 V AC (SELV)
Insulation tested at	
• channels against rear panel and load voltage L+	500 V DC
• Between channel groups	500 V DC
Current consumption	
• from backplane bus (5 V)	130 mA maximum

• from supply voltage L+	120 mA maximum
Module power loss	Typ. 5 W
Status, interrupts, diagnostics	
Status display	Green LED per channel
Interrupts	
• Hardware interrupt	Configurable
• Diagnostic interrupt	Configurable
Diagnostic functions	
• Supply voltage monitoring for electronics	Yes
• Load voltage monitoring	Green LED per group
• Group fault display for internal fault for external fault	 red LED (INTF) red LED (EXTF)
• Channel fault display	None
• Diagnostic information can be read out	Yes
Monitoring for	
• Wire break	I < 1 mA
Substitute values can be connected	Yes
Sensor supply outputs	
Number of outputs	2
Output voltage	
• loaded	At least L+(-2.5 V)
Output current	
• Rated value	120 mA
• Permitted range	0 to 150 mA
Additional (redundant) supply	Possible
Short-circuit protection	Yes, electronic
Data for selecting a sensor	
Input voltage	
• Rated value	24 V DC
• For "1" signal	11 to 30 V
• For "0" signal	-30 to 5 V
Input current	
• For "1" signal	6 to 12 mA
• For "0" signal	< 6 mA
Input characteristic	In accordance with IEC 61131; type 2
Connection of 2-wire BEROs • Permissible quiescent current	Possible 3 mA maximum
Time, frequency	
Internal preparation time [1] for	

• Status recognition only Input delay for channel groups 0.05 ms/0.05 ms Input delay for channel groups 0.05 ms/0.1 ms or 0.1 ms/0.1 ms Input delay for channel groups ≥ 0.5 ms	Maximum 50 µs Maximum 70 µs Maximum 180 µs
• Status recognition and hardware interrupt enable Input delay for channel groups 0.05 ms/0.05 ms 2) Input delay for channel groups 0.05 ms/0.1 ms or 0.1 ms/0.1 ms Input delay for channel groups ≥ 0.5 ms	Maximum 60 µs Maximum 80 µs Maximum 190 µs
Internal processing time for diagnostics/diagnostic interrupt	Maximum 5 ms
Input delay	
• Configurable	Yes
• Rated value	0.05 / 0.1 /0.5 / 3 ms
• Input frequency (with 0.1 ms delay time)	< 2kHz
Values included in cycle and response times.	
Sensor circuit	
Sensor resistor circuit for wire-break monitoring	10 to 18 kΩ
[1] The filter times for the selected input delay are added to the total runtime. [2] Substitute value function; diagnostics and diagnostic interrupt must not be selected.	

4.8.2 Assigning parameters to the SM 421; DI 16 x DC 24 V

Parameter assignment

You will find a description of the general configuration of digital modules in section 5.3.

Parameters of SM 421; DI 16 x DC 24 V

The table below shows an overview of configurable parameters and their default settings for SM 421; DI 16 x DC 24 V.

Table 4-8 Parameters of SM 421; DI 16 x DC 24 V

Parameters	Value range	Default[2]	Parameter type	Scope
Enable				
• Diagnostic interrupt[1]	Yes/no	No	Dynamic	Module
• Hardware interrupt[1]	Yes/no	No		
• Destination CPU for interrupt	1 to 4	-	Static	Module
Diagnostics				
• Wire break	Yes/no	No	Static	Channel Channel group
• No load voltage L+/sensor supply	Yes/no	No		
Hardware interrupt trigger				
• Positive edge	Yes/no	-	Dynamic	Channel
• Negative edge	Yes/no			
Input delay	0.05 ms 0.1 ms 0.5 ms 3 ms	3 ms	Static	Channel group
Reaction to error	Set substitution value (SSV) Hold last value (HLV)	SV	Dynamic	Module
Set substitution value "1"	Yes/no	No	Dynamic	Channel

[1] If you use the module in ER-1/ER-2, you must set this parameter to "No" because the interrupt lines are not available in ER-1/ER-2.

[2] Only in the CR (central rack) is it possible to start up the digital modules with the default settings.

Allocating the sensor supplies to channel groups

The two sensor supplies of the module are used to supply two channel groups: Inputs 0 to 7 and inputs 8 to 15. You also configure diagnostics for the sensor supply at those two channel groups.

Ensuring a wire break check is carried out

To ensure that a wire break check is carried out, you require an external sensor circuit using a resistor of 10 to 18 kΩ. The resistor should be connected parallel to the contact and should be arranged as closely as possible to the sensor.

This additional resistor is not required in the following cases:

- If 2-wire BEROs are used
- If you do no configure the "Wire break" diagnostics

Setting the input delay for channel groups

You can only set the input delay for each group of channels. In other words, the setting for channel 0 applies to inputs 0 to 7 and the setting for channel 8 applies to inputs 8 to 15.

Note

The parameters that are entered for the remaining channels (1 to 7 and 9 to 15) must be equal to the value 0 or 8, otherwise those channels will be reported as being incorrectly configured.

Any hardware interrupts that have occurred in the meantime will be reported after acknowledgement.

Optimum signal propagation delays

You can achieve the fastest signal propagation delay with the following settings:

- Both channel groups are configured with an input delay of 50 µs
- All the diagnoses (load voltage error, wire break) are deactivated
- Diagnostic interrupt is not enabled

See also

Parameters (Page 83)

4.8.3 Behavior of the SM 421; DI 16 x DC 24 V

Effect of operating mode and supply voltage on the input values

The input values of the SM 421; DI 16 x 24 DC depend on the operating mode of the CPU and on the supply voltage of the module.

Table 4-9 Relationships of the analog input values on the CPU's operating state and on the L+ supply voltage

CPU operating state		Power supply L+ at digital module	Input value of digital module
POWER ON	RUN	L+ present	Process value
		L+ missing	0 signal*
	STOP	L+ present	Process value
		L+ missing	0 signal*
POWER OFF	-	L+ present	-
		L+ missing	-
* Depends on the parameter assignment			

Reaction to failure of the supply voltage

Failure of the supply voltage of the SM 421; DI 16 x 24 DC is always indicated by the EXTF LED on the module. This information is also available on the module (entry in diagnostic data.)

Diagnostics interrupt triggering is based on parameter settings.

Short-circuit at the sensor supply Vs

The relevant Vs LED goes dark if a short-circuit is detected at the sensor supply Vs, irrespective of parameter settings.

Effect of errors and parameter assignment on the input values

The input values of the SM 421; DI 16 x 24 DC are affected by certain errors and the parameter assignment of the module. The following table lists the effects on the input values.

You can find more diagnostic messages in the Appendix "Diagnostic Data of the Signal Modules".

Table 4-10 Relationships between the input values of errors and the configuration

Diagnostic message	"Diagnostics" parameter	"Reaction to Error" parameter	Input value of digital module
No module parameters	Cannot be disabled	Not relevant	0 signal (all channels)
Front connector missing		Substitute a value (SV)	Configured substitute value
		KLV	Last read, valid value
Incorrect parameters (module/channel)	Cannot be disabled	Not relevant	0 signal (module/all incorrectly configured channels)

Diagnostic message	"Diagnostics" parameter	"Reaction to Error" parameter	Input value of digital module
Internal voltage failure	Cannot be disabled	Substitute a value (SV)	Configured substitute value
		KLV	Last read, valid value
Hardware interrupt lost	Cannot be disabled	Not relevant	Current process value
Wire break (for each channel)	Disabled	-	0 signal
	Activated	Substitute a value (SV)	Configured substitute value
		KLV	Last read, valid value
Sensor supply missing (also activated via "No Load Voltage L+")	Disabled	-	0 signal
	Activated	Substitute a value (SV)	Configured substitute value
		KLV	Last read, valid value
No load voltage L+ (for each channel group)	Disabled	-	0 signal, if the contact is connected via the sensor supply; process value for the external sensor supply
	Activated	Substitute a value (SV)	Configured substitute value
		KLV	Last read, valid value

Behavior when the input delay equals 0.1 ms or 0.05 ms and an error occurs

If you have set the following parameters:

- Input delay: 0.1 ms or 0.05 ms
- Reaction to error: "Keep Last Value" (KLV) or "Substitute Value" (SV)
- Set substitution value "1"

In the event of a fault on a channel that has a 1 signal, the following could occur:

- A 0 signal may be briefly output
- If configured, a hardware interrupt may be generated.

This occurs before the last valid value or substitute value "1" is output.

4.9 Digital input module SM 421; DI 16 x AC 120 V (6ES7421-5EH00-0AA0)

Features

The SM 421; DI 16 x AC 120 V has the following features:

- 16 inputs, isolated
- Nominal input voltage 120 VAC
- Suitable for switches and 2-wire proximity switches (BEROs, IEC 61131; type 2)

Wiring diagram of the SM 421; DI 16 x AC 120 V

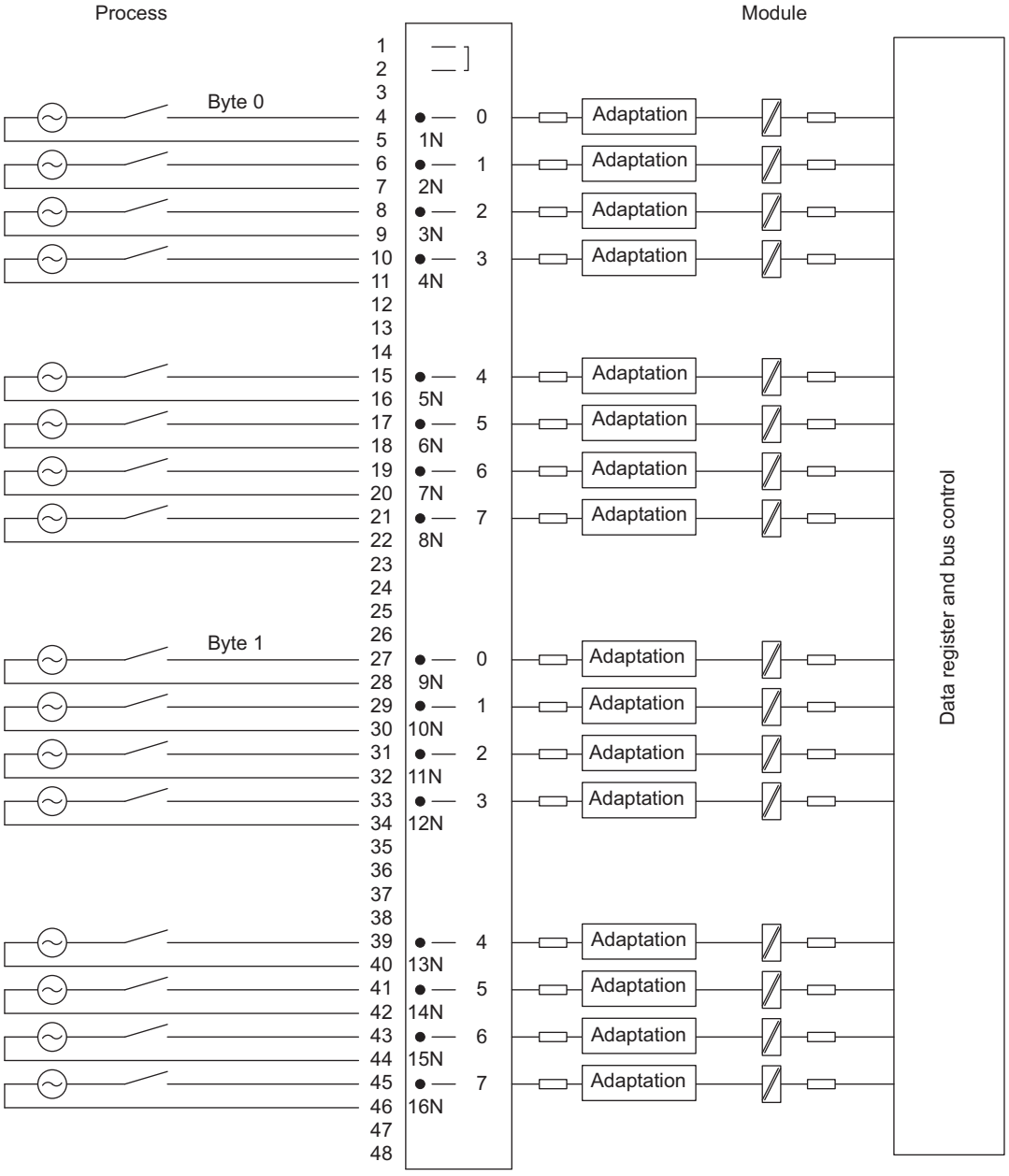

Figure 4-5 Wiring diagram of the SM 421; DI 16 x AC 120

Specifications of SM 421; DI 16 x AC 120 V

Dimensions and weight	
Dimensions W x H x D (mm)	25 x 290 x 210
Weight	Approx. 650 g
Module-specific data	
Number of inputs	16

Cable length	
• Unshielded	600 m
• Shielded	1000 m
Voltages, currents, electrical potentials	
Number of simultaneously controlled inputs	16
Electrical isolation	
• Between channels and the backplane bus	Yes
• Between channels In groups of	Yes 1
Permissible potential difference	
• Between Minternal and the inputs	120 VAC
• Between inputs of different groups	250 VAC
Isolation test voltage	1500 VAC
Current consumption	
• From the backplane bus (5 V)	Max. 100 mA
Power loss of the module	Typ. 3.0 W
Status, interrupts, diagnostics	
Status display	Green LED per channel
Interrupts	None
Diagnostic functions	None
Sensor selection data	
Input voltage	
• Nominal value	120 V
• For "1" signal	72 to 132 VAC
• For "0" signal	0 to 20 V
• Frequency band	47 to 63 Hz
Input current	
• With "1" signal	6 to 20 mA
• With "0" signal	0 to 4 mA
Input delay	
• At "0" to "1" transitions	2 to 15 ms
• With "1" to "0"	5 to 25 ms
Input characteristics	In accordance with IEC 61131; type 2
Connection of 2-wire BEROs • Permissible quiescent current	Supported Max. 4 mA

4.10 Digital input module SM 421; DI 16 x UC 24/60 V (6ES7421-7DH00-0AB0)

4.10.1 Features

Overview

SM 421; DI 16 x UC 24/60 V has the following features:

- 16 inputs, individually isolated
- Rated input voltage UC 24 V to UC 60 V
- Suitable for switches and 2-wire proximity switches (BEROs)
- Suitable as P-reading and M-reading input
- Group fault display for internal faults (INTF) and external faults (EXTF)
- Configurable diagnostics
- Configurable diagnostic interrupt
- Configurable hardware interrupts
- Configurable input delays

The status LEDs indicate the process status.

Connection and circuit diagram for SM 421; DI 16 x UC 24/60 V

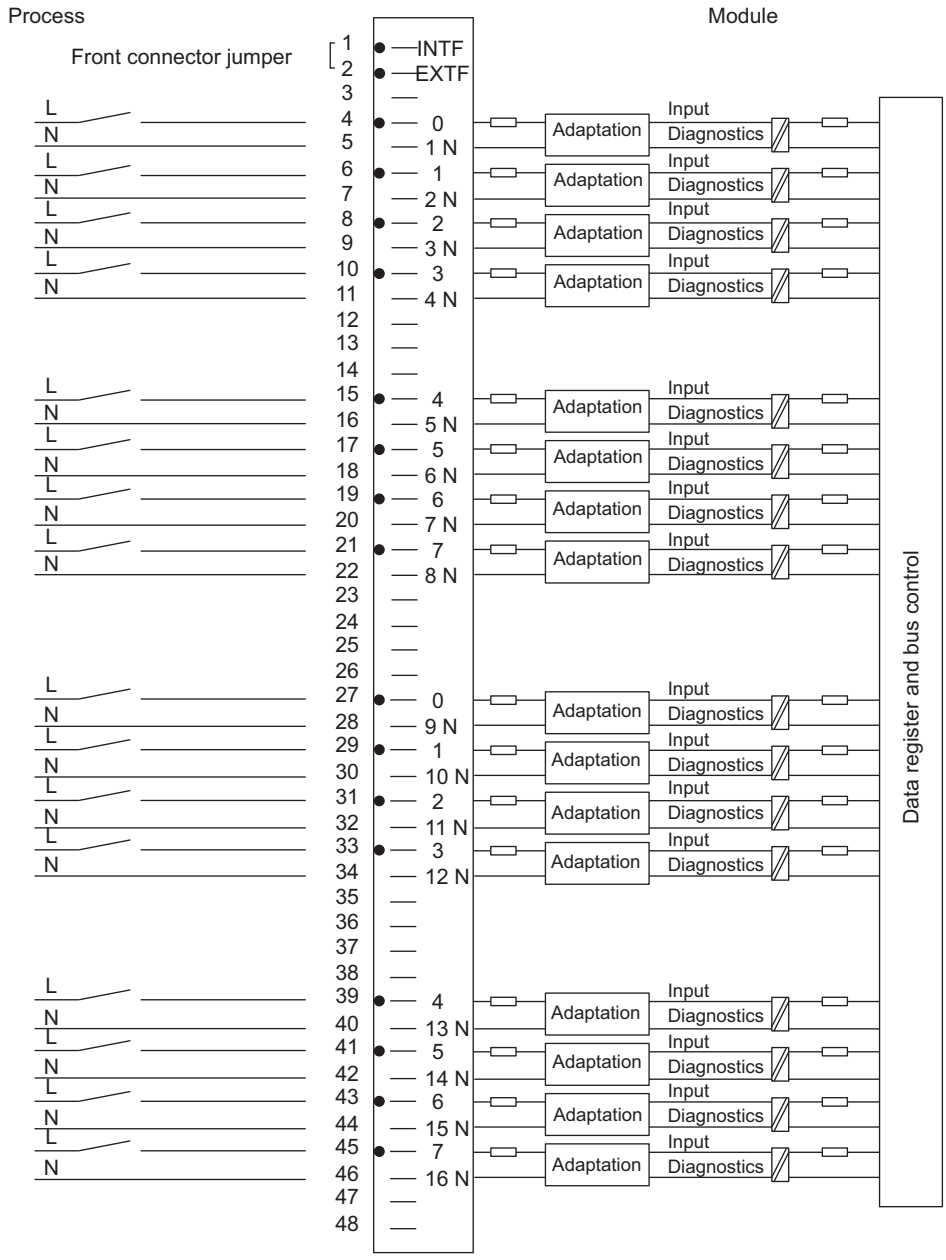

Figure 4-6 Connection and circuit diagram for SM 421; DI 16 x UC 24/60 V

Technical specifications for SM 421; DI 16 x UC 24/60 V

Dimensions and weight	
Dimensions W x H x D (mm)	25 x 290 x 210
Weight	ca. 600 g
Module-specific data	
Number of inputs	16

Cable length	
• Unshielded, input delay 0.5 ms 3 ms 10 / 20 ms	 Maximum 100 m Maximum 600 m Maximum 600 m
• Cable length, shielded	1000 m
Voltage, current and potential	
Number of inputs that can be enabled simultaneously	16
Electrical isolation	
• Between channels and backplane bus	Yes
• Between channels in groups of	Yes 1
Permissible potential difference	
• Between different circuits	60 V DC/30 V AC (SELV)
Insulation tested at	
• Channels to backplane bus and load voltage L+	1500 V AC
• Between channels	1500 V AC
Current consumption	
• from backplane bus (5 V)	Maximum 150 mA
Module power loss	Typ. 8 W
Status, interrupts, diagnostics	
Status display	Green LED per channel
Interrupts	
• Hardware interrupt	Configurable
• Diagnostic interrupt	Configurable
Diagnostic functions	Configurable
• Group fault display for internal fault for external fault	 red LED (INTF) red LED (EXTF)
• Channel fault display	None
• Diagnostic information can be read out	Possible
Monitoring for	
• Wire break	I > 0.7 mA
Substitute values can be connected	No
Data for selecting a sensor	
Input voltage	
• Rated value	UC 24 to 60 V
• For "1" signal	15 to 72 V DC - 15 to -72 V DC 15 to 60 V AC
• For "0" signal	DC - 6 to +6 V AC 0 to 5 V
Frequency range	DC/AC 47 to 63 Hz
Input current	

• For "1" signal	Typ. 4 to 10 mA
Input characteristic	as IEC 61131-2 [1)]
Connection of 2-wire BEROs • Permissible quiescent current	Possible Maximum 0.5 to 2 mA[2)]
Time, frequency	
Internal processing time for	
• hardware interrupt enable only	Maximum 450 µs
• Hardware and diagnostic interrupt enable	Maximum 2 ms
Input delay	
• Configurable	Yes
• Rated value	0.5 / 3 / 10 / 20 ms
Values included in cycle and response times.	
Sensor circuit	
Sensor resistor circuit for wire-break monitoring	
• Rated voltage 24 V(15 to 35 V)	18 kΩ
• Rated voltage 48 V(30 to 60 V)	39 kΩ
• Rated voltage 60 V(50 to 72 V)	56 kΩ

[1] IEC 61131-2 does not specify any data for UC modules. The values were, however, adjusted as far as possible to IEC 61131-2.

[2] Minimum quiescent current is required for wire break monitoring.

4.10.2 Assigning parameters to the SM 421; DI 16 x UC 24/60 V

Parameter assignment

You will find a description of the general configuration of digital modules in section 5.3.

Parameters of the SM 421; DI 16 x UC 24/60 V

The following table contains an overview of the parameters you can set and their default settings for the SM 421; DI 16 x UC 24/60 V.

Table 4-11 Parameters of the SM 421; DI 16 x UC 24/60 V

Parameters	Value range	Default[2]	Parameter type	Scope
Enable				
• Diagnostic interrupt[1]	Yes/no	No	Dynamic	Module
• Hardware interrupt[1]	Yes/no	No		
• Destination CPU for interrupt	1 to 4	-	Static	Module
Diagnostics				
• Wire break	Yes/no	No	Static	Channel
Hardware interrupt trigger				
• Positive edge • Negative edge	yes/no yes/no	-	Dynamic	Channel
Input delay[3]	0.5 ms (DC) 3 ms (DC) 20 ms (DC/AC)	3 ms (DC)	Static	Channel group

[1] If you use the module in ER-1/ER-2, you must set this parameter to "No" because the interrupt lines are not available in ER-1/ER-2.

[2] Only in the CR (central rack) is it possible to start up the digital modules with the default settings.

[3] If you assign 0.5 ms , then you should not configure diagnostics because the internal processing time for diagnostic functions can be > 0.5 ms.

Ensuring a wire break check is carried out

To ensure that a wire break check is carried out, you require an external sensor circuit using a resistor of 18 to 56 kΩ. The resistor should be connected parallel to the contact and should be arranged as closely as possible to the sensor.

This additional resistor is not required in the following cases:

- If 2-wire BEROs are used
- If you do no configure the "Wire Break" diagnostics

Setting the input delay for channel groups

You can only set the input delay for each group of channels. In other words, the setting for channel 0 applies to inputs 0 to 7 and the setting for channel 8 applies to inputs 8 to 15.

Note

The parameters that are entered for the remaining channels (1 to 7 and 9 to 15) must be equal to the value 0 or 8, otherwise those channels will be reported as being incorrectly configured.

Any hardware interrupts that have occurred in the meantime will be reported after acknowledgement.

Optimum signal propagation delays

You can achieve the fastest signal propagation delay with the following settings:

- Both channel groups are configured with an input delay of 0.5 ms
- The diagnostics parameter is disabled
- The diagnostic interrupt parameter is disabled

Circuit as for active high or active low input

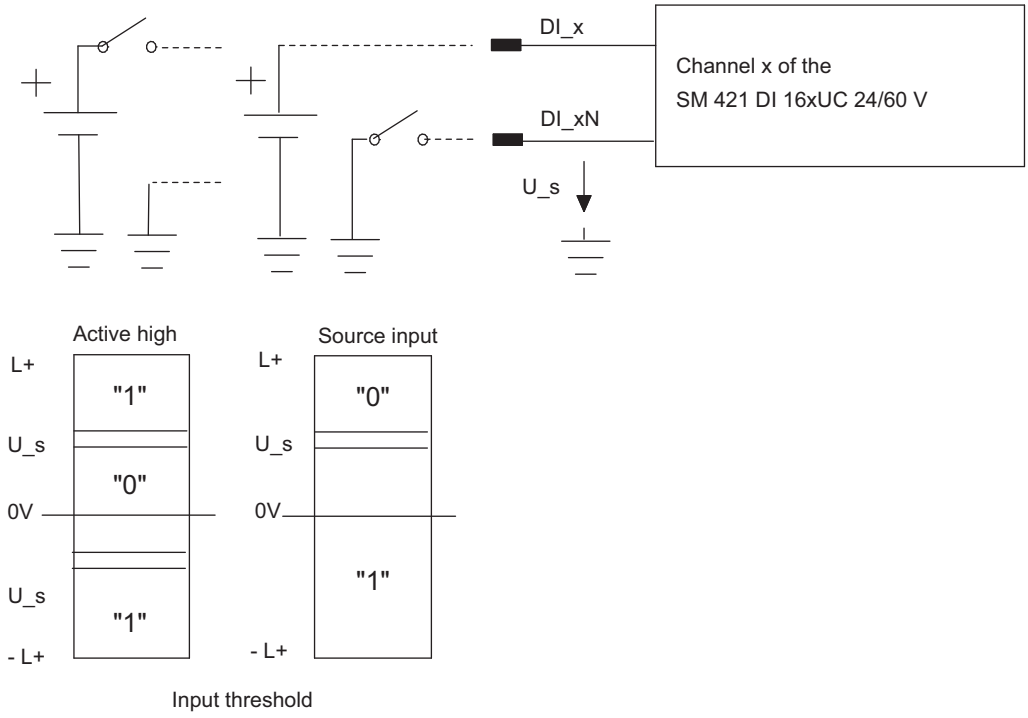

Figure 4-7 Circuit as for active high or active low input

See also

Parameters (Page 83)

4.11 Digital input module SM 421; DI 16 x UC 120/230 V (6ES7 421-1FH00-0AA0)

Features

The SM 421; DI 16 x UC 120/230 is characterized by the following features:

- 16 inputs, isolated
- Nominal input voltage 120/230 VUC
- Suitable for switches and 2-wire proximity switches

Wiring and block diagram of the SM 421; DI 16 x UC 120/230 V

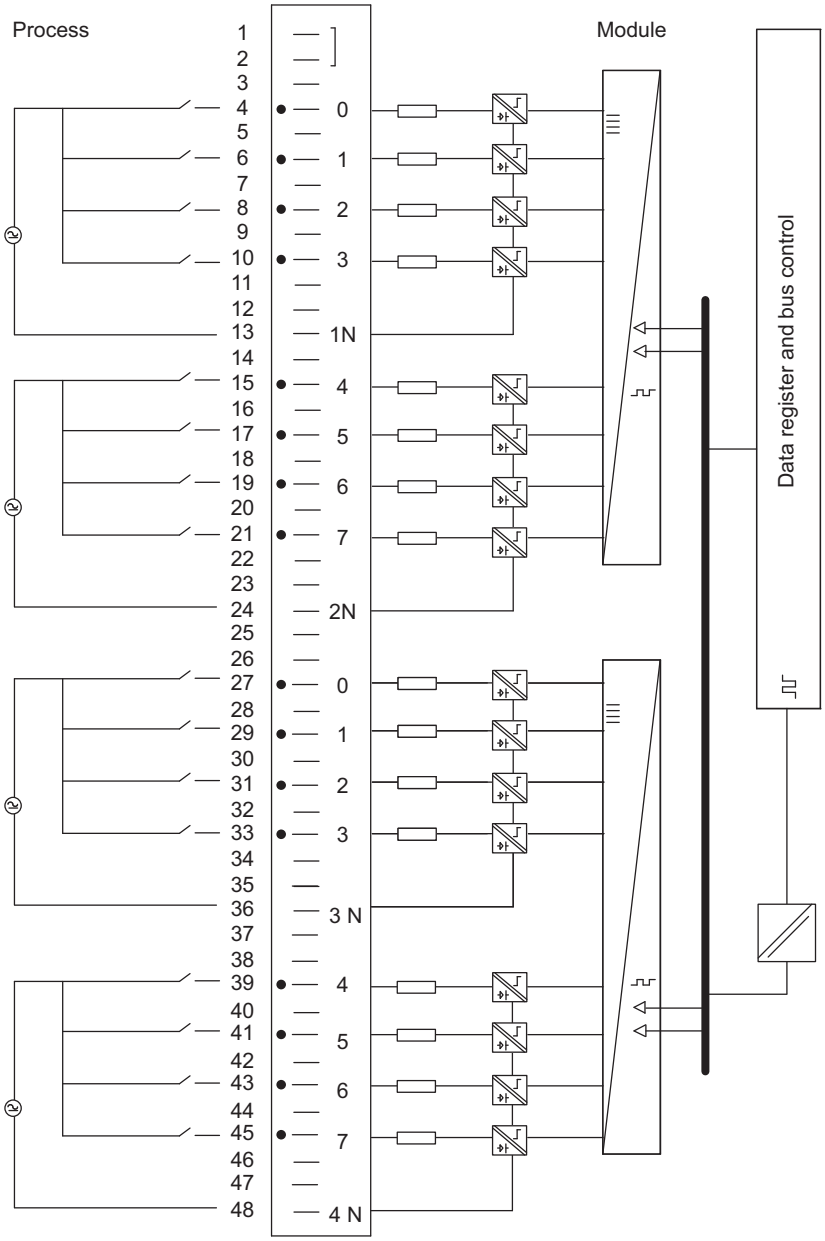

Figure 4-8 Wiring and block diagram of the SM 421; DI 16 x UC 120/230 V

Specifications of the SM 421; DI 16 x UC 120/230 V

Dimensions and weight	
Dimensions W x H x D (mm)	25 x 290 x 210
Weight	Approx. 650 g
Module-specific data	
Number of inputs	16

Cable length	
• Unshielded	600 m
• Shielded	1000 m
Voltages, currents, electrical potentials	
Number of simultaneously controlled inputs	16 at 120 V 8 at 240 V 16 with fan subassembly
Electrical isolation	
• Between channels and the backplane bus	Yes
• Between channels In groups of	Yes 4
Permissible potential difference	
• between $M_{internal}$ and inputs	230 VAC
• Between inputs of different groups	500 VAC
Insulation resistance	4000 VAC
Current consumption	
• From the backplane bus (5 V)	Max. 100 mA
Power loss of the module	Typ. 3.5 W
Status, interrupts, diagnostics	
Status display	Green LED per channel
Interrupts	None
Diagnostic functions	None
Sensor selection data	
Input voltage	
• Nominal value	120/230 VUC
• For "1" signal	79 to 264 V AC 80 to 264 V DC
• For "0" signal	0 to 48 V UC
• Frequency band	47 to 63 Hz
Input current	
• With "1" signal	2 to 5 mA
• With "0" signal	0 to 1 mA
Input delay	
• At "0" to "1" transitions	5 to 25 ms
• With "1" to "0"	5 to 25 ms
Input characteristics	In accordance with IEC 61131-2; Type 1
Connection of 2-wire BEROs • Permissible quiescent current	Supported Max. 1 mA

4.12 Digital input module SM 421; DI 16 x UC 120/230 V (6ES7421-1FH20-0AA0)

Properties

SM 421; DI 16 x UC 120/230 V has the following features:

- 16 inputs, isolated in groups of 4
- Rated input voltage UC 120/230 V
- Input characteristic in accordance with IEC 61131-2; type 2
- Suitable for switches and 2-wire proximity switches (BEROs)

The status LEDs indicate the process status.

Connection and circuit diagram for SM 421; DI 16 x UC 120/230 V

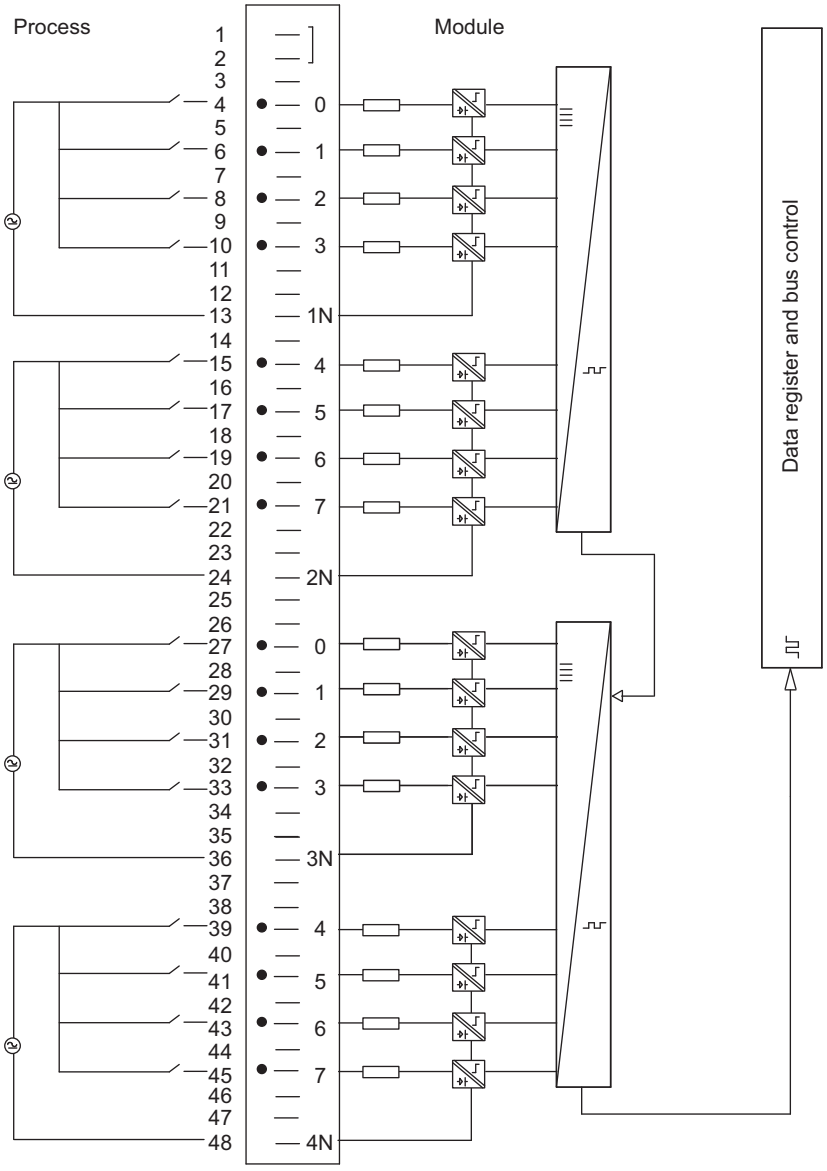

Figure 4-9 Connection and circuit diagram for SM 421; DI 16 x UC 120/230 V

Technical specifications for SM 421; DI 16 x UC 120/230 V

Dimensions and weight	
Dimensions W x H x D (mm)	25 x 290 x 210
Weight	ca. 650 g
Module-specific data	
Number of inputs	16
Cable length	
• unshielded	600 m

• shielded	1000 m
Voltage, current and potential	
Rated supply voltage of electronics L+	None
Number of inputs that can be enabled simultaneously	16
Electrical isolation	
• Between channels and backplane bus	Yes
• Between channels in groups of	Yes 4
Permissible potential difference	
• Between M_{intern} and the inputs	250 V AC (reinforced insulation) Test voltage: 4000 Vac (type test) 2400 AC (routine test)
• Between inputs of different groups	500 V AC (basic insulation) Test voltage: 2400 Vac (routine test) 2300 Vac (type test)
Current consumption	
• From backplane bus (5 V)	Maximum 80 mA
Module power loss	Typ. 12 W
Status, interrupts, diagnostics	
Status display	Green LED per channel
Interrupts	None
Diagnostic functions	None
Substitute values can be connected	No
Data for selecting a sensor	
Input voltage	
• Rated value	UC 120/230 V
• For "1" signal	74 to 264 V AC 80 to 264 V DC -80 to -264 V DC
• For "0" signal	0 to 40 V AC -40 to +40 V DC
Frequency range	47 to 63 Hz
Input current	
• For "1" signal (120 V)	Typ. 10 mA AC Typ. 1.8 mA DC
• For "1" signal (230 V)	Typ. 14 mA AC Typ. 2 mA DC
• For "0" signal	0 to 6 mA AC 0 to 2 mA DC
Input delay	
• For "0" to "1"	Maximum 20 ms AC Maximum 15 ms DC

• For "1" to "0"	Maximum 30 ms AC Maximum 25 ms DC
Input characteristic	In accordance with IEC 61131-2; type 2
Connection of 2-wire BEROs • Permissible quiescent current	Possible Maximum 5 mA AC

4.13 Digital input module SM 421; DI 32xUC 120 V (6ES7421-1EL00-0AA0)

Properties

SM 421; DI 32 x UC 120 V has the following features:

- 32 inputs, isolated
- Rated input voltage UC 120 V
- Suitable for switches and 2-wire proximity switches

Connection and circuit diagram for SM 421; DI 32 x UC 120 V

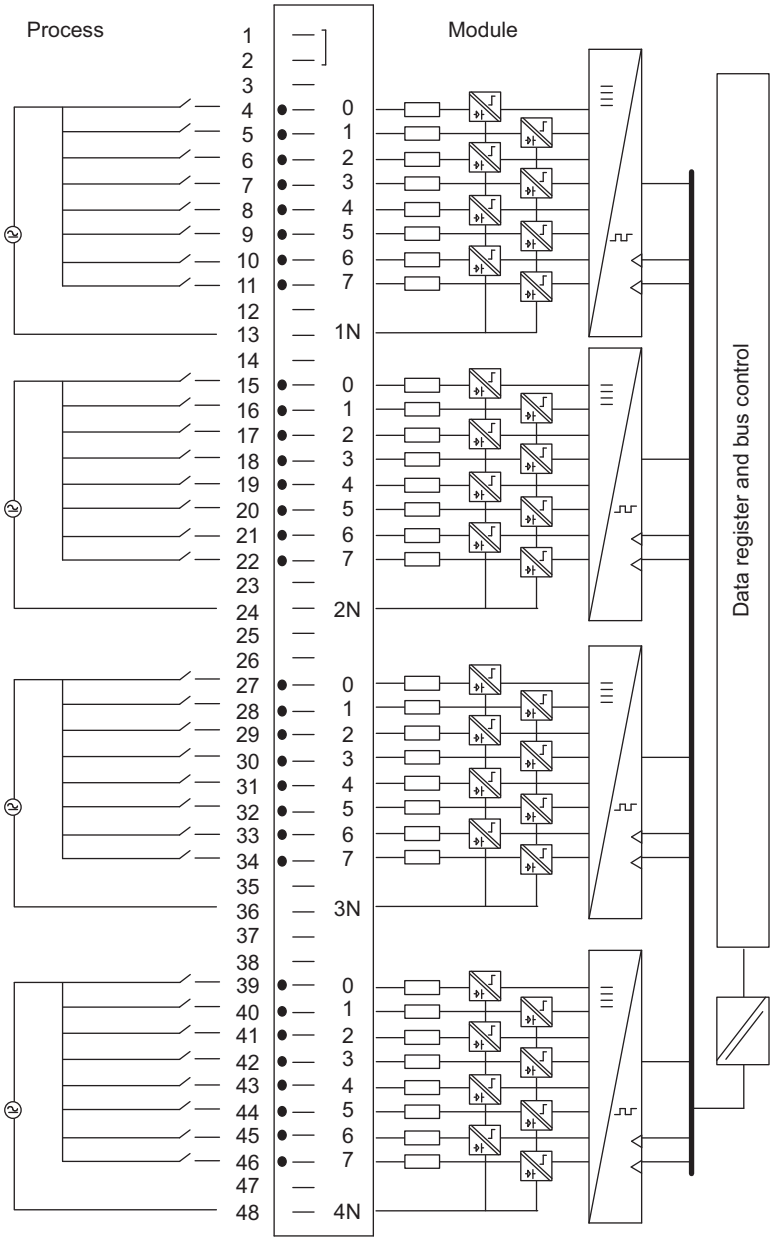

Figure 4-10 Connection and circuit diagram for SM 421; DI 32 x UC 120 V

Technical specifications for SM 421; DI 32 x UC 120 V

Dimensions and weight	
Dimensions W x H x D (mm)	25 x 290 x 210
Weight	ca. 600 g
Module-specific data	
Number of inputs	32

Cable length	
• unshielded	600 m
• shielded	1000 m
Voltage, current and potential	
• Reverse polarity protection	Yes
Number of inputs that can be enabled simultaneously	32
Electrical isolation	
• Between channels and backplane bus	Yes
• Between channels in groups of	Yes 8
Permissible potential difference	
• Between M_{intern} and the inputs	120 V AC (reinforced insulation)
• Between inputs of different groups	250 V AC (basic insulation)
Insulation tested at	1500 V AC
Current consumption	
• From backplane bus (5 V)	Maximum 200 mA
Module power loss	Typ. 6.5 W
Status, interrupts, diagnostics	
Status display	Green LED per channel
Interrupts	None
Diagnostic functions	None
Data for selecting a sensor	
Input voltage	
• Rated value	UC 120 V
• For "1" signal	79 to 132 V AC 80 to 132 V DC
• For "0" signal	0 to 20 V
• Frequency range	47 to 63 Hz
Input current	
• For "1" signal	2 to 5 mA
• For "0" signal	0 to 1 mA
Input delay	
• For "0" to "1"	5 to 25 ms
• For "1" to "0"	5 to 25 ms
Input characteristic	In accordance with IEC 61131; type 1
Connection of 2-wire BEROs	Possible
• Permissible quiescent current	Maximum 1 mA

4.14 Digital output module SM 422; DO 16 x DC 24 V/2 A; (6ES7422-1BH11-0AA0)

Properties

SM 422; DO 16 x DC 24 V/2 A has the following features:

- 16 outputs, isolated in two groups of 8
- Output current 2 A
- Rated load voltage 24 V DC

The status LEDs indicate the system state even if the front connector is not connected.

Special points to note when commissioning

Digital output module SM 422; DO 16 x DC 24 V/2 A, order number 6ES7422-1BH**11**-0AA0, differs from digital output module SM 422; DO 16 x DC 24 V/2 A, order number 6ES7422-1BH**10**-0AA0, in the following feature:

To commission the module, it is **not** necessary to supply each group of 8 outputs with load voltage (e.g. connection of 1L+ and 3L+). The module is fully functional even if only one group is supplied with L+.

Note

Any switch-off of all outputs by switching off a single L+ supply implemented with the previous module 6ES7422-1BH**10**-0AA0 is no longer possible.

Connection and circuit diagram for SM 422; DO 16 x DC 24 V/2 A

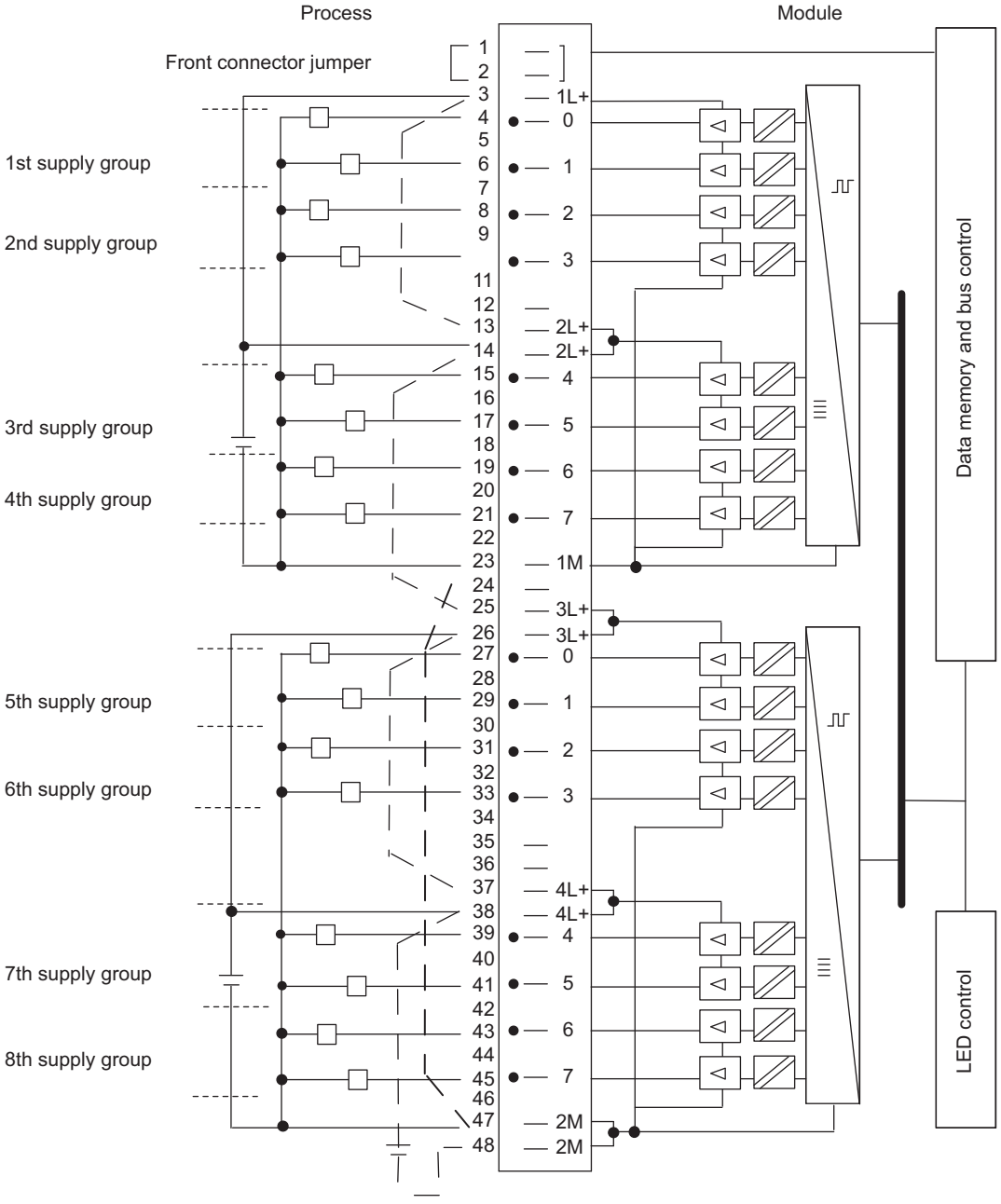

Figure 4-11 Connection and circuit diagram for SM 422; DO 16 x DC 24 V/2 A

Technical specifications for SM 422, DO 16 x DC 24 V/2 A

Dimensions and weight	
Dimensions W x H x D (mm)	25 x 290 x 210
Weight	ca. 600 g
Module-specific data	

Number of outputs	16
Cable length	
• unshielded	600 m
• shielded	1000 m
Voltage, current and potential	
Rated supply voltage of electronics L+	24 V DC
Rated load voltage L+	24 V DC
Total current of outputs ([1] to 2 outputs for each supply group)	
• Up to 40°C	Maximum 3 A
• Up to 60°C	Maximum 2 A
Electrical isolation	
• Between channels and backplane bus	Yes
• Between channels in groups of	Yes 8
Permissible potential difference	
• Between different circuits	60 V DC/30 V AC (SELV)
Insulation tested at	
• Channels to backplane bus and load voltage L+	500 Vac or 707 Vdc (type test)
• Between outputs of different groups	500 Vac or 707 Vdc (type test)
Current consumption	
• From backplane bus (5 V)	Maximum 160 mA
• Supply and load voltage L + (no load)	Maximum 30 mA
Module power loss	Typ. 5 W
Status, interrupts, diagnostics	
Status display	Green LED per channel
Interrupts	None
Diagnostic functions	None
Data for selecting an actuator	
Output voltage	
• For "1" signal	At least L+ (-0.5 V)
Output current	
• For "1" signal Rated value Permitted range	 2A 5 mA to 2.4 A
• For "0" signal (residual current)	Maximum 0.5 mA
Output delay (with resistive load)	
• For "0" to "1"	Maximum 1 ms
• For "1" to "0"	Maximum 1 ms
Load resistance range	24 Ω to 4 kΩ
Lamp load	Maximum 10 W
Connection of 2 outputs in parallel	
• For redundant control of a load	Possible (only outputs of the same group)
• For increasing the power	Not possible

Control of a digital input	Possible
Switching frequency max.	
• With resistive load	100 Hz
• With an inductive load in accordance with IEC 947-51, DC 13	0.2 Hz at 1 A 0.1 Hz at 2 A
• With lamp load	Maximum 10 Hz
(Internal) limitation of inductive switch-off voltage to	Maximum -30 V
Short-circuit protection for output • Response threshold	Clocked electronically[2] 2.8 to 6 A
[1] A supply group always consists of 2 neighboring channels, starting from channel 0. Channels 0 and 1, 2 and 3, ... 14 and 15 therefore each form a supply group. [2] Reclosing at full load is not guaranteed after a short circuit. Measures for dealing with this problem: • Change the signal at the output or • Interrupt the load voltage of the module • Briefly disconnect the load from the output	

4.15 Digital output module SM 422; DO 16 x DC 20-125 V/1.5 A (6ES7422-5EH10-0AB0)

4.15.1 Features

Overview

The SM 422; DO 16 x DC 20-125 V/1.5 A has the following features:

- 16 outputs, each channel is fused; reverse polarity protection and isolated in groups of 8
- Output current 1,5 A
- Nominal load voltage 20 to 125 VDC
- Group error display for internal faults (INTF) and external faults (EXTF)
- Programmable diagnostics
- Programmable diagnostic interrupt
- Programmable substitution value output

Wiring diagram of the SM 422; DO 16 x DC 20-125 V/1.5 A

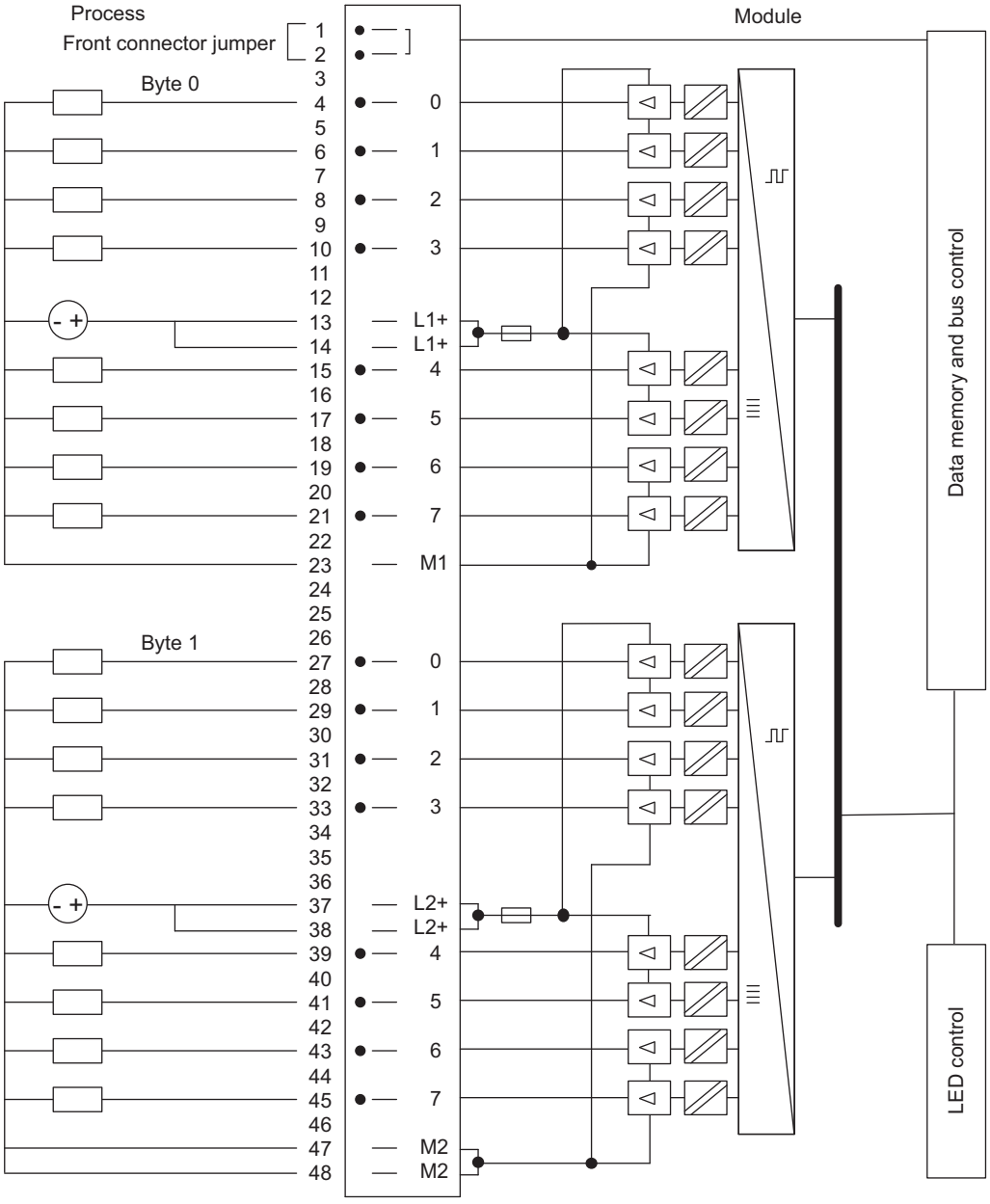

Figure 4-12 Wiring diagram of the SM 422; DO 16 x DC 20-125 V/1.5 A

Specifications of the SM 422; DO 16 x DC 20-125 V/1.5 A

Dimensions and weight	
Dimensions W x H x D (mm)	25 x 290 x 210
Weight	Approx. 800 g
Module-specific data	
Number of outputs	16

Cable length		
• Unshielded	Max. 600 m	
• Shielded	Max. 1000 m	
Voltages, currents, electrical potentials		
Nominal load voltage L1	20 to 138 V DC	
• Reverse polarity protection	Yes, with fuse	
Total current of the outputs [1)]		
		With fan subassembly
• Up to 40° C	Max. 16 A	21 A
• Up to 60° C	Max. 8 A	14 A
Electrical isolation		
• Between channels and the backplane bus	Yes	
• Between channels	Yes	
In groups of	8	
Permissible potential difference		
• Between outputs of different groups	250 VAC	
Isolation test voltage	1500 VAC	
Current consumption		
• From the backplane bus (5 V)	Max. 700 mA	
• From load voltage L+ (no load)	Max. 2 mA	
Power loss of the module	Typ. 10 W	
Status, interrupts, diagnostics		
Status display	Green LED per channel	
Interrupts		
• Diagnostic interrupt	Programmable	
Diagnostic functions		
• Group error display for internal disruption for external disruption	Configurable Red LED (INTF) Red LED (EXTF)	
• Diagnostic information dump	Yes	
Injection of substitution values	Yes, programmable	
Actuator selection data		
Output voltage		
• With "1" signal	Min. L+ (-1.0 V)	
Output current		
• With signal "1" Rated value Permissible range Permissible peak current	 1.5 A 10 mA to 1.5 A Maximum 3 A (for 10 ms)	
• With "0" signal (residual current)	Max. 0,5 mA	
Output delay (resistive load)		
• At "0" to "1" transitions	Max. 2 ms	
• With "1" to "0"	Max. 13 ms	

Wiring two outputs in parallel	
• For redundant load control	Supported (only outputs of the same group)
• For performance increase	Supported (only outputs of the same group)
Triggering a digital input	Supported
Switching frequency	
• With resistive load	Max. 10 Hz
• With inductive load in accordance with IEC 947-5-1, DC 13	Max. 0.5 Hz
Short-circuit protection of the output	Electronically protected[2)]
• Threshold	Typ. 04 to 5 A
Replacement fuses	Fuse, 8 A/250 V, quick blow
[1] To achieve maximum performance capability, distribute the high-current load between the two groups. [2] To reset a deactivated output, first set the output signal to 0 and then to 1. If output signal 1 is written to a deactivated output and the short-circuit remains, additional interrupts are generated (provided the diagnostic interrupt parameter was set).	

Note

If the power supply is switched on by means of a mechanical contact, a voltage pulse may occur at the outputs. The transient pulse lasts a maximum of 0.5 ms.

Changing fuses

WARNING

This can result in injury.

If you change a fuse without removing the front connector of the module, you could be injured by an electric shock.

Consequently, always remove the front connector before you change the fuse.

4.15.2 Assigning parameters to the SM 422; DO 16 x DC 20-125 V/1.5 A

Parameter assignment

You will find a description of the general procedure for assigning parameters to digital modules in the respective sections.

Parameters of the SM 421; DO 16 x DC 20-125 V/1.5 A

You will find an overview of the parameters you can set and their default settings for the SM 422; DO 16 x DC 20-125 V/1.5 A in the following table.

Table 4-12 Parameters of the SM 421; DO 16 x DC 20-125 V/1.5 A

Parameters	Value range	Default setting[2]	Parameter type	Scope
Enable				
• Diagnostic interrupt[1]	Yes/no	No	Dynamic	Module
• Destination CPU for interrupt	1 to 4	-	Static	Module
Reaction to CPU STOP	Substitute a value (SV) Keep last value (KLV)	SV	Dynamic	Module
Diagnostics				
• Load voltage L+ missing	Yes/no	No	Static	Channel group
• Short-circuit to M	Yes/no	No	Static	Channel
Set substitution value "1"	Yes/no	No	Dynamic	Channel

[1] If you use the module in ER-1/ER-2, you must set this parameter to "No" because the interrupt lines are not available in ER-1/ER-2.

[2] Only in the CR (central rack) is it possible to start up the digital modules with the default settings.

Assigning the "No load voltage L+" diagnostics to channel groups

You can only set the "No load voltage L+" diagnostics separately for each channel group. In other words, the setting for channel 0 applies to inputs 0 to 7, and the setting for channel 8 applies to inputs 8 to 15.

See also

Parameters (Page 83)

4.16 Digital output module SM 422; DO 32 x DC 24 V/0.5 A (6ES7422-1BL00-0AA0)

Properties

SM 422; DO 32 x DC 24 V/0.5 A has the following features:

- 32 outputs, isolated in a group of 32
- Power supply in groups of 8 channels.
- A supply group always consists of 8 neighboring channels, starting from channel 0. Channels 0 to 7, 8 to 15, ... 16 to 23 and 24 to 31 each form a supply group.
- Each of these supply groups can be switched off separately by disconnecting L+; however, you must remember the common ground connection.
- Output current 0.5 A
- Rated load voltage 24 V DC

The status LEDs indicate the system state even if the front connector is not connected.

Connection and circuit diagram for SM 422\; DO 32 x DC 24 V/0.5 A

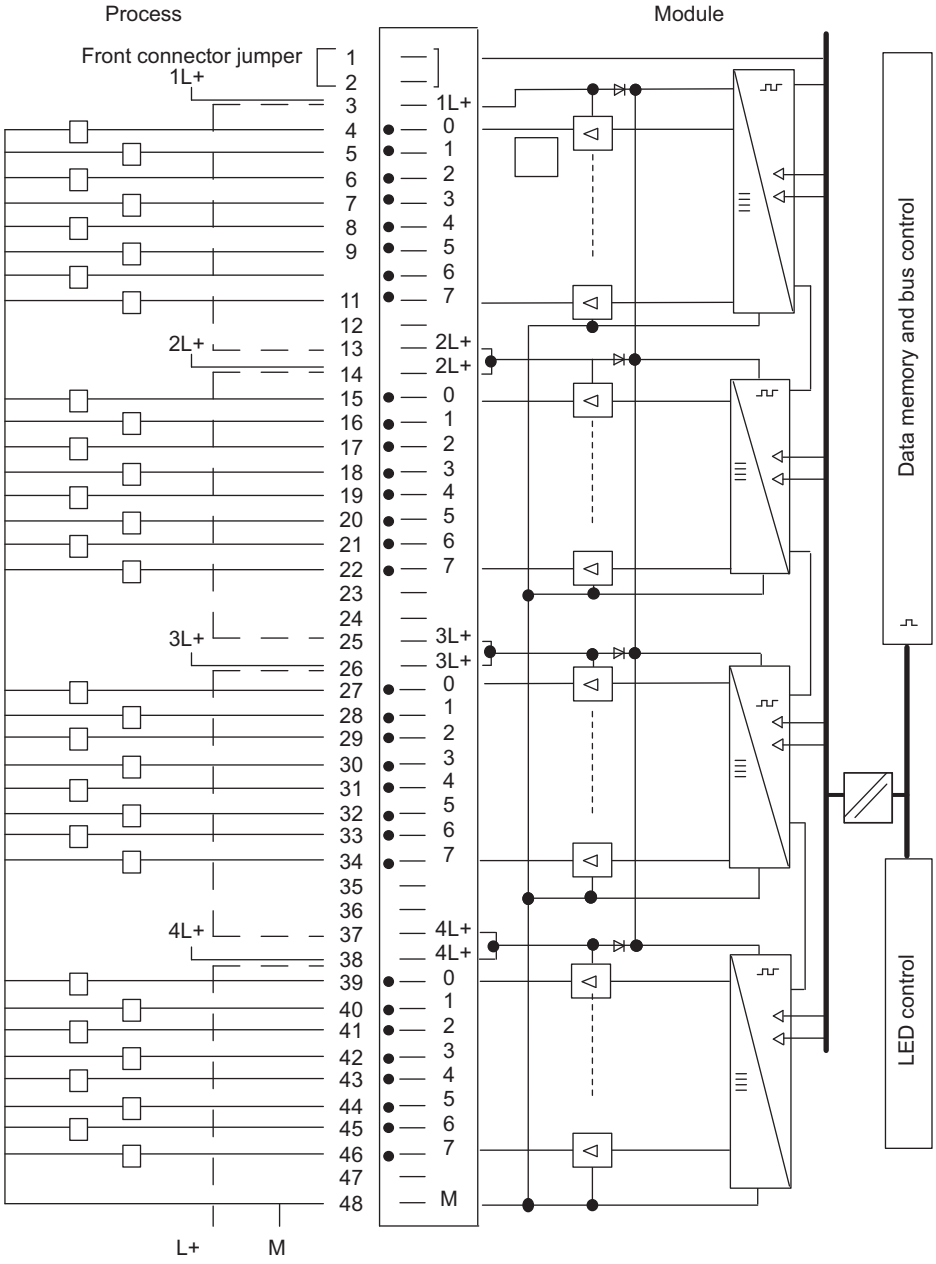

Figure 4-13 Connection and circuit diagram for SM 422; DO 32 x DC 24 V/0.5 A

Technical specifications for SM 422; DO 32 x DC 24 V/0.5 A

Dimensions and weight	
Dimensions W x H x D (mm)	25 x 290 x 210
Weight	ca. 600 g
Module-specific data	
Number of outputs	32

Cable length	
• unshielded	600 m
• shielded	1000 m
Voltage, current and potential	
Rated supply voltage of electronics L+	24 V DC
Rated load voltage L+	24 V DC
Total current of outputs ([1] to 8 outputs for each supply group)	
Up to 40°C Up to 60°C	Maximum 4 A Maximum 2 A
Electrical isolation	
• Between channels and backplane bus	Yes
• Between channels	No
Permissible potential difference	
• Between different circuits	60 V DC/30 V AC (SELV)
Insulation tested at	
• Channels to backplane bus and load voltage L+	500 Vac or 707 Vdc (type test)
• Load voltage L+ to backplane bus	500 Vac or 707 Vdc (type test)
Current consumption	
• From backplane bus (5 V)	Maximum 200 mA
• Supply and load voltage L + (no load)	Maximum 30 mA
Module power loss	Typ. 4 W
Status, interrupts, diagnostics	
Status display	Green LED per channel
Interrupts	None
Diagnostic functions	None
Data for selecting an actuator	
Output voltage	
• For "1" signal	At least L+ (-0.3 V)
Output current	
• For "1" signal Rated value Permitted range	 500 mA 5 mA to 600 mA
• For "0" signal (residual current)	Maximum 0.3 mA
Output delay (with resistive load)	
• For "0" to "1"	Maximum 1 ms
• For "1" to "0"	Maximum 1 ms
Load resistance range	48 Ω to 4 kΩ
Lamp load	Maximum 5 W
Connection of 2 outputs in parallel	
• For redundant control of a load	Possible (only outputs of the same group)
• For increasing the power	Possible (only outputs of the same group)
Control of a digital input	Possible
Switching frequency	

• With resistive load	Maximum 100 Hz
• With an inductive load in accordance with IEC 947-5-1, DC 13	Maximum 2 Hz at 0.3 A Maximum 0.5 Hz at 0.5 A
• With lamp load	Maximum 10 Hz
(Internal) limitation of inductive switch-off voltage to	Typ. - 27 V
Short-circuit protection for output	Clocked electronically
• Response threshold	Typ. 0.7 to 1.5 A
[1] A supply group always consists of 8 neighboring channels, starting from channel 0. Channels 0 to 7, 8 to 15, 16 to 23 and 24 to 32 therefore each form a supply group.	

4.17 Digital output module SM 422; DO 32 x DC 24 V/0.5 A (6ES7422-7BL00-0AB0)

4.17.1 Features

Overview

SM 422; DO 32 x DC 24 V/0.5 A has the following features:

- 32 outputs, fused and isolated in groups of 8
- Output current 0.5 A
- Rated load voltage 24 V DC
- Group fault display for internal faults (INTF) and external faults (EXTF)
- Configurable diagnostics
- Configurable diagnostic interrupt
- Configurable substitute value output

The status LEDs indicate the system state even if the front connector is not connected.

Connection and circuit diagram for SM 422; DO 32 x DC 24 V/0.5 A

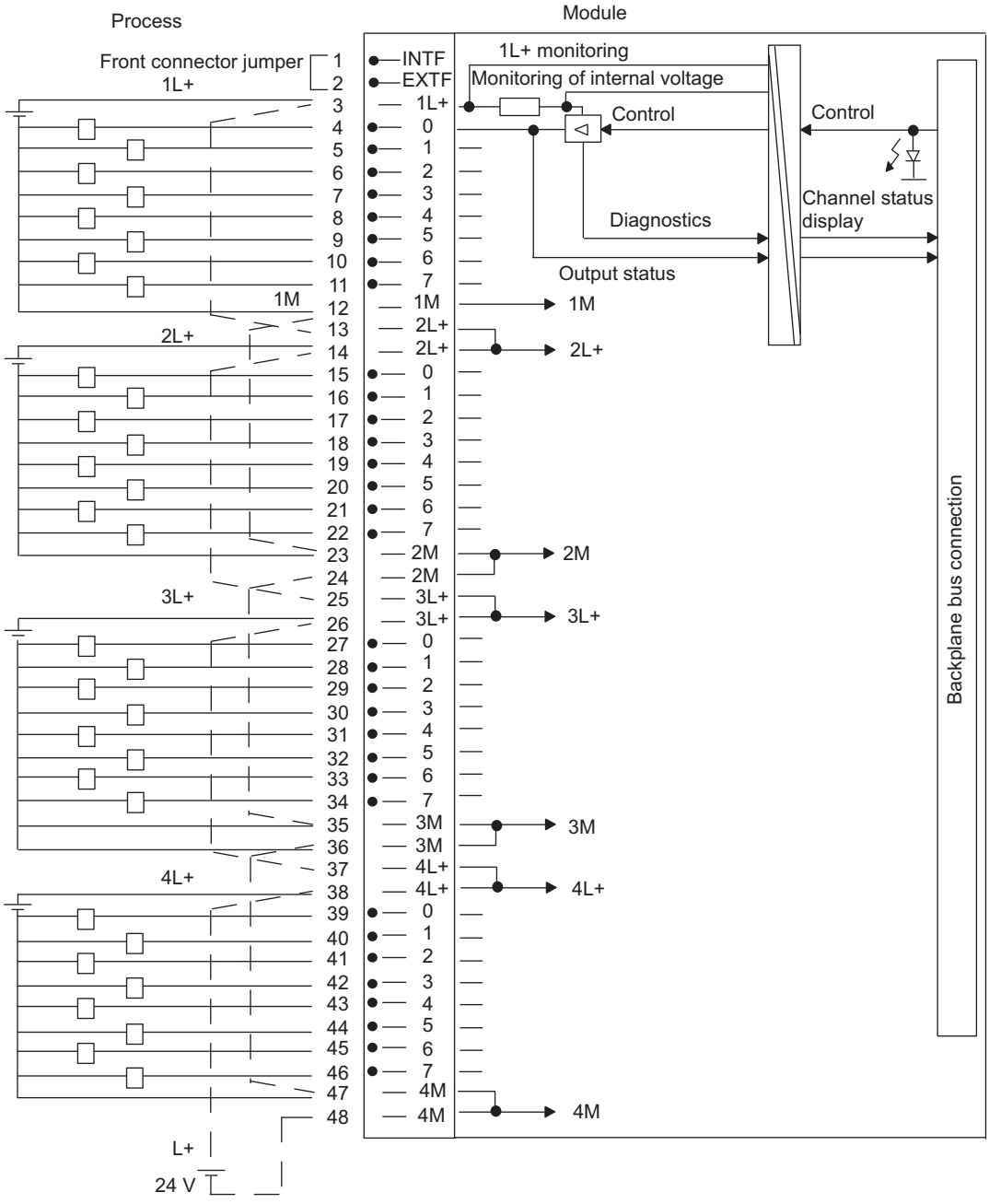

Figure 4-14 Connection and circuit diagram for SM 422; DO 32 x DC 24 V/0.5 A

Technical specifications for SM 422; DO 32 x DC 24 V/0.5 A

Dimensions and weight	
Dimensions W x H x D (mm)	25 x 290 x 210
Weight	ca. 600 g
Module-specific data	

Number of outputs	32
Cable length	
• unshielded	600 m
• shielded	1000 m
Voltage, current and potential	
Rated supply voltage of electronics L+	24 V DC
Rated load voltage L+	24 V DC
Total current of outputs (per group)	
• Up to 40°C	Maximum 4 A
• Up to 60°C	Maximum 2 A
Electrical isolation	
• Between channels and backplane bus	Yes
• Between channels	Yes
In groups of	8
Permissible potential difference	
• Between different circuits	60 V DC/30 V AC (SELV)
Insulation tested at	
• Channels to backplane bus and load voltage L+	500 V DC
• Between outputs of different groups	500 V DC
Current consumption	
• From backplane bus (5 V)	Maximum 200 mA
• Supply and load voltage L + (no load)	120 mA maximum
Module power loss	Typ. 8 W
Status, interrupts, diagnostics	
Status display	Green LED per channel
Interrupts	
• Diagnostic interrupt	Configurable
• Hardware interrupt	Configurable
Diagnostic functions	
• Load voltage monitoring	Yes
• Group fault display	
For internal fault	Red LED (INTF)
For external fault	Red LED (EXTF)
• Diagnostic information can be read out	Yes
Monitoring for	
• Short circuit	> 1 A (typ.)
• Wire break	< 0.15 mA
Substitute values can be connected	Yes
Data for selecting an actuator	
Output voltage	
• For "1" signal	At least L+ (-0.8 V)
Output current	

• For "1" signal Rated value Permitted range	 0.5 A 5 mA to 600 mA
• For "0" signal (residual current)	Maximum 0.5 mA
Load resistance range	48 Ω to 4 kΩ
Connection of 2 outputs in parallel	
• For redundant control of a load	Possible (only outputs of the same group)
• For increasing the power	Possible (only outputs of the same group)
Control of a digital input	Possible
Switching frequency	
• With resistive load	Maximum 100 Hz
• With an inductive load in accordance with IEC 947-5-1, DC 13	Maximum 2 Hz
• With lamp load	Maximum 2 Hz
(Internal) limitation of inductive switch-off voltage to	Typ. L + (- 45 V)
Short-circuit protection for output • Response threshold	Clocked electronically Typ. 0.75 to 1.5 A
Time, frequency	
Internal processing time between backplane bus and input of the output driver [1)]	
Up to product version 03	
• Irrespective of diagnostics/diagnostic interrupt/substitute value enable	Maximum 100 µs
Up to product version 04	
• Without diagnostics/diagnostic interrupt/substitute value enable	Maximum 60 µs
• With diagnostics/diagnostic interrupt/substitute value enable	Maximum 100 µs
[1] The switching time of the output driver (< 100 µs with resistive load) is added to the total runtime	

4.17.2 Assigning parameters to the SM 422; DO 32 x DC 24 V/0.5 A

Parameter assignment

You will find a description of the general procedure for assigning parameters to digital modules in the respective sections.

Parameters of SM 422; DO 32 x DC 24 V/0.5 A

You will find an overview of the parameters that you can set and their default settings for the SM 422; DO 32 x DC 24 V/0.5 A in the table below.

Table 4-13 Parameters of SM 422; DO 32 x DC 24 V/0.5 A

Parameters	Value range	Default[2]	Parameter type	Scope
Enable				
• Diagnostic interrupt[1]	Yes/no	No	Dynamic	Module
• Destination CPU for interrupt	1 to 4	-	Static	Module
Reaction to CPU STOP	Set substitution value (SSV) Keep last value (KLV)	SV	Dynamic	Module
Diagnostics				
• Wire break	Yes/no	No	Static	Channel
• No load voltage L+/sensor supply	Yes/no	No		Channel group
• Short-circuit to M	Yes/no	No		Channel
• Short-circuit to L+	Yes/no	No		Channel
Set substitution value "1"	Yes/no	No	Dynamic	Channel

[1] If you use the module in ER-1/ER-2, you must set this parameter to "No" because the interrupt lines are not available in ER-1/ER-2.

[2] Only in the CR (central rack) is it possible to start up the digital modules with the default settings.

See also

Parameters (Page 83)

4.17.3 Behavior of the SM 422; DO 32 x DC 24 V/0.5 A

Influence of the operating state and supply voltage on output values

The output values of the SM 422; DO 32 x DC 24 V/0.5 A depend on the operating mode of the CPU and on the supply voltage of the module.

Table 4-14 Relationships of the analog output values on the CPU's operating state and on the L+ supply voltage

CPU operating mode		Power supply L+ at digital module	Output value of digital module
POWER ON	RUN	L+ present	CPU value
		L+ missing	0 signal
	STOP	L+ present	Substitution value/last value (default = 0 signal)
		L+ missing	0 signal
POWER OFF	-	L+ present	0 signal
		L+ missing	0 signal

Reaction to failure of the supply voltage

The failure of the supply voltage of the SM 422; DO 32 x DC 24 V/0.5 A is always indicated by the EXTF LED on the module. This information is also available on the module (entry in diagnostic data.)

Diagnostics interrupt triggering is based on parameter settings.

See also

Assigning parameters to the SM 422; DO 32 x DC 24 V/0.5 A (Page 142)

4.18 Digital output module SM 422; DO 8 x AC 120/230 V/5 A (6ES7422-1FF00-0AA0)

Properties

SM 422; DO 8 x AC 120/230 V/5 A has the following features:

- 8 outputs, isolated in groups of 1
- Output current 5 A
- Rated load voltage 120/230 V AC

The status LEDs indicate the system state even if the front connector is not connected.

Connection and circuit diagram for SM 422; DO 8 x AC 120/230 V/5 A

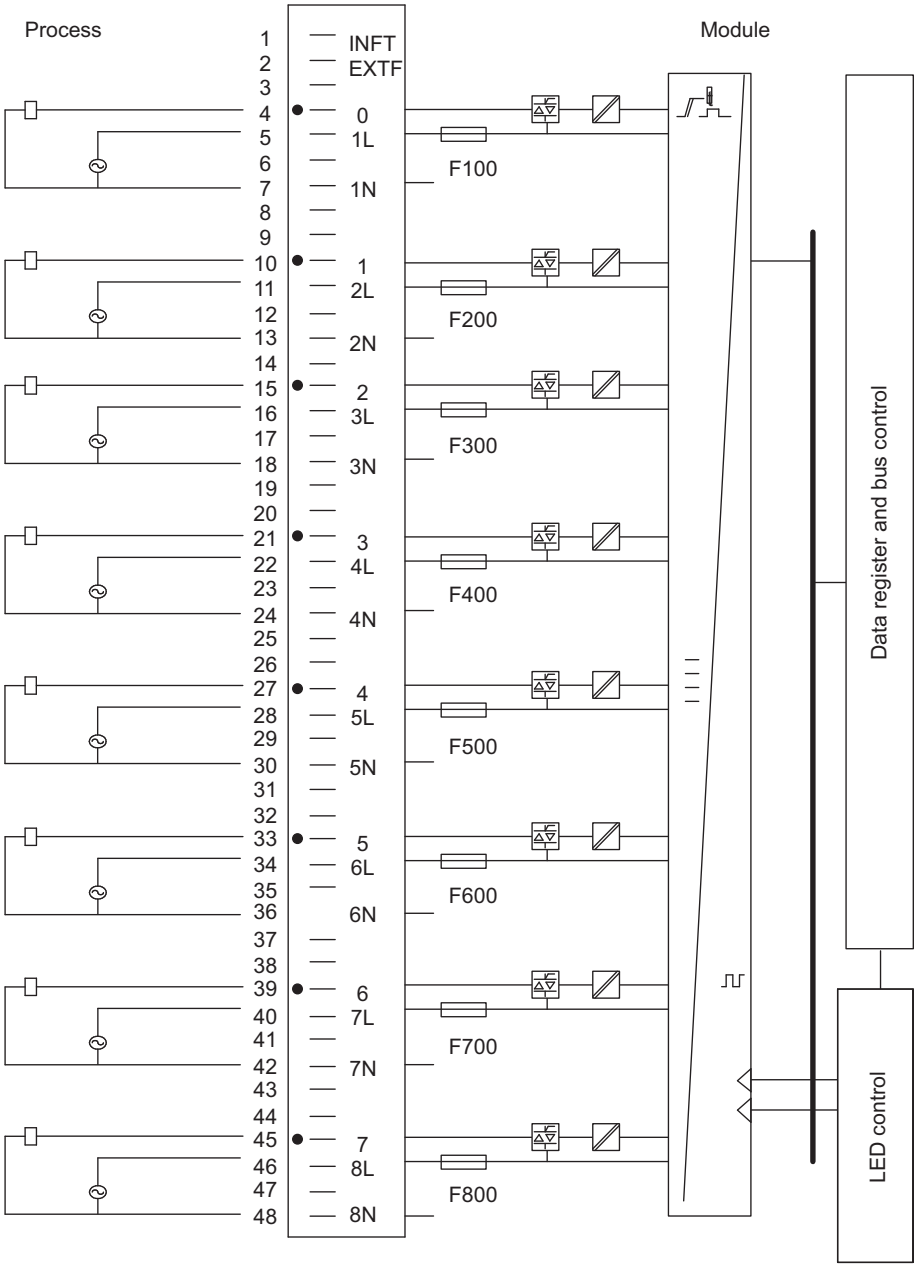

Figure 4-15 Connection and circuit diagram for SM 422; DO 8 x AC 120/230 V/5 A

Technical specifications for SM 422; DO 8 x AC 120/230 V/5 A

Dimensions and weight	
Dimensions W x H x D (mm)	25 x 290 x 210
Weight	ca. 800 g
Module-specific data	
Number of outputs	8

Cable length		
• unshielded	600 m	
• shielded	1000 m	
Voltage, current and potential		
Rated load voltage L1 Permissible frequency range	79 to 264 V AC 47 to 63 Hz	
Total current of outputs		
		With fan module
• Up to 40°C	24 A	24 A
• Up to 60°C	max. 16 A	20 A
Electrical isolation		
• Between channels and backplane bus	Yes	
• Between channels	Yes	
In groups of	1	
Permissible potential difference		
• Between outputs of different groups	500 V AC	
Insulation strength	4000 V AC	
Current consumption		
• From backplane bus (5 V)	Maximum 250 mA	
• From load voltage L + (no load)	Maximum 1.5 mA	
Module power loss	Typ. 16 W	
Status, interrupts, diagnostics		
Status display	Green LED per channel	
Interrupts	None	
Diagnostic functions	Not configurable	
• Group fault display for internal fault for external fault	 red LED (INTF) fuse failure red LED (EXTF) no load voltage	
Data for selecting an actuator		
Output voltage		
• For "1" signal	At maximum current at least L1 (-1.5 Vrms) At minimum current at least L1 (-10.7 Vrms)	
Output current		
• For "1" signal Rated value Permitted range Permitted surge current (per group)	 5 A 10 mA to 5 A Maximum 50 A per cycle	
• For "0" signal (residual current)	Maximum 3.5 mA	
Output delay (with resistive load)		
• For "0" to "1"	Maximum 1 AC cycle	
• For "1" to "0"	Maximum 1 AC cycle	
Minimum load current	10 mA	

Zero crossing	Maximum 55 V
Size of motor starter	Maximum 5 pursuant to NEMA
Lamp load	Maximum 100 W
Connection of 2 outputs in parallel	
• For redundant control of a load	Possible (only outputs connected to same load)
Control of a digital input	Possible
Switching frequency	
• With resistive load	Maximum 10 Hz
• With an inductive load in accordance with IEC 947-5-1, DC 13	Maximum 0.5 Hz
• With lamp load	1 Hz
Short-circuit protection for output	Fuse, 8 A, 250 V (per output)
• Current required for safety shutdown	At least 100 A
• Response time	Maximum 100 ms
Spare fuses	Fuse, 8 A, quick-response
• Wickmann	194-1800-0
• Schurter	SP001.1013
• Littelfuse	217.008

Changing the fuse

WARNING

Injury is possible.

If you change a fuse without first unplugging the front connector of the module, you may receive an electric shock.

Always remove the front connector before changing a fuse.

4.19 Digital output module SM 422; DO 16 x AC 120/230 V/2 A (6ES7422-1FF00-0AA0)

Properties

SM 422; DO 16 x AC 120/230 V/2 A has the following features:

- 16 outputs, isolated in groups of 4
- Output current 2 A
- Rated load voltage 120/230 V AC

The status LEDs indicate the system state even if the front connector is not connected.

Connection and circuit diagram for SM 422; DO 16 x AC 120/230 V/2 A

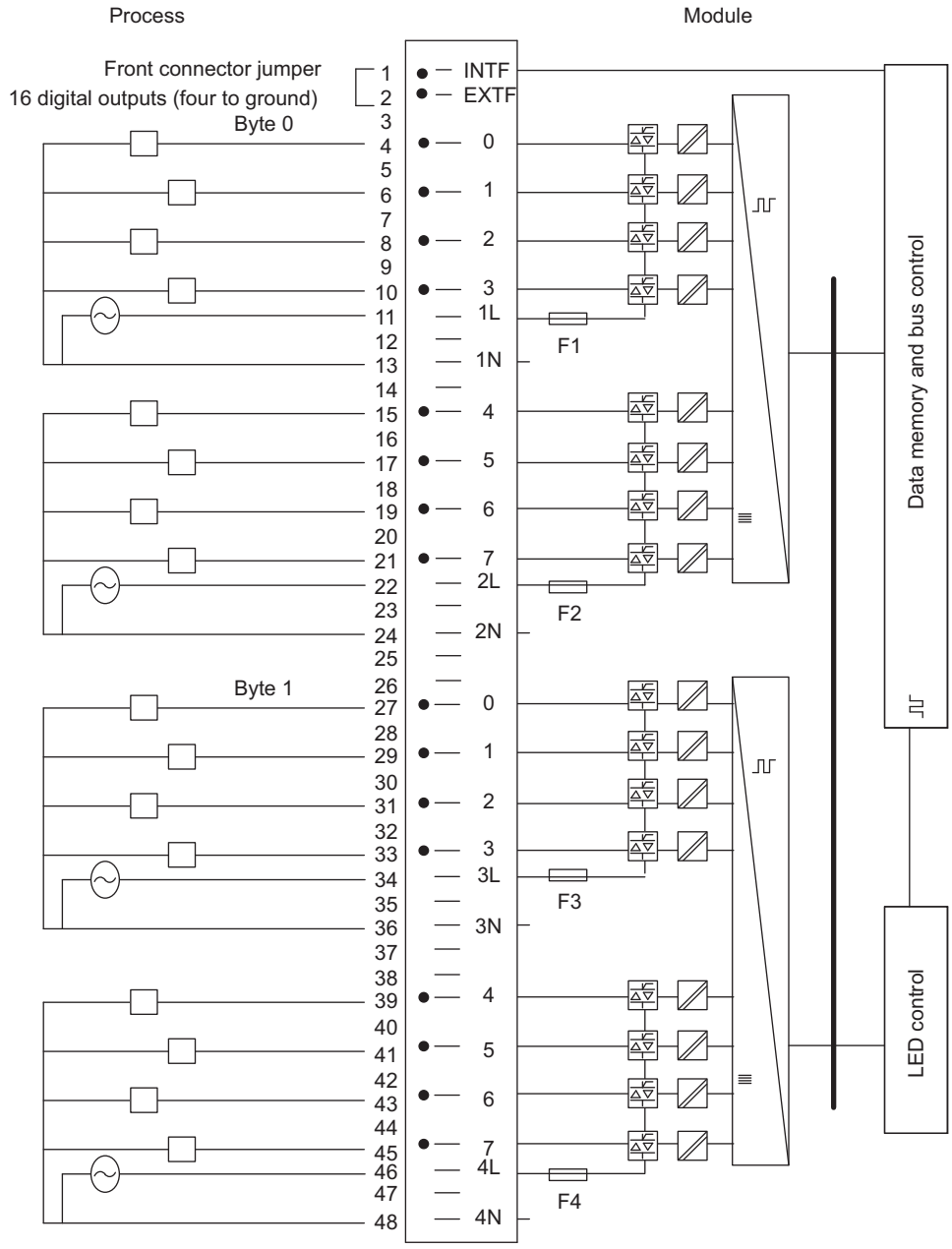

Figure 4-16 Connection and circuit diagram for SM 422; DO 16 x AC 120/230 V/2 A

Technical specifications for SM 422; DO 16 x AC 120/230 V/2 A

Dimensions and weight	
Dimensions W x H x D (mm)	25 x 290 x 210
Weight	ca. 800 g
Module-specific data	
Number of outputs	16

Cable length		
• unshielded	600 m	
• shielded	1000 m	
Voltage, current and potential		
Rated load voltage L1 Permissible frequency range	79 to 264 V AC 47 to 63 Hz	
Total current of outputs (per group)		
		With fan module
• Up to 40°C	max. 4 A	6 A
• Up to 60°C	max. 2 A	5 A
Electrical isolation		
• Between channels and backplane bus	Yes	
• Between channels in groups of	Yes 4	
Permissible potential difference		
• Between outputs of different groups	500 V AC (basic insulation) Test voltage: 1350 Vac (routine test)	
• Between Mintern and the outputs	250 V AC (reinforced insulation) Test voltage: 4000 Vac (type test) 1350 AC (routine test)	
Current consumption		
• From backplane bus (5 V)	Maximum 400 mA	
• From load voltage L + (no load)	1.5 mA	
Module power loss	Typ. 16 W	
Status, interrupts, diagnostics		
Status display	Green LED per channel	
Interrupts	None	
Diagnostic functions	Not configurable	
• Group fault display for internal fault for external fault	Red LED (INTF) fuse failure Red LED (EXTF) no load voltage	
Data for selecting an actuator		
Output voltage		
• For "1" signal	At maximum current at least L1 (-1.3 Vrms) At minimum current at least L1 (-18.1 Vrms)	
Output current		
• For "1" signal Rated value Permitted range Permitted surge current (per group)	2 A 10 mA to 2 A Maximum 50 A per cycle	

• For "0" signal (residual current)	Maximum 2.6 mA
Output delay (with resistive load)	
• For "0" to "1"	Maximum 1 ms
• For "1" to "0"	Maximum 1 AC cycle
Minimum load current	10 mA
Zero crossing	No zero crossing switch
Size of motor starter	Maximum 5 pursuant to NEMA
Lamp load	Maximum 50 W
Connection of 2 outputs in parallel	
• For redundant control of a load	Possible (only outputs connected to same load)
Control of a digital input	Possible
Switching frequency	
• With resistive load	Maximum 10 Hz
• With an inductive load in accordance with IEC 947-5-1, AC 15	Maximum 0.5 Hz
• With lamp load	1 Hz
Short-circuit protection for output	Fuse, 8 A, 250 V (per group)
• Current required for safety shutdown	At least 100 A
• Response time	Maximum 100 ms
Spare fuses	Fuse, 8 A, quick-response
• Wickmann	194-1800-0
• Schurter	SP001.1013
• Littelfuse	217.008

Changing the fuse

Note

Injury is possible.

If you change a fuse without first unplugging the front connector of the module, you may receive an electric shock.

Always remove the front connector before changing a fuse.

4.20 Digital output module SM 422; DO 16 x AC 20-120 V/2 A (6ES7422-5EH00-0AB0)

4.20.1 Features

Overview

The SM 422; DO 16 x AC 20-120 V/2 A has the following features:

- 16 outputs, isolated in groups of 1
- Output current 2 A
- Nominal load voltage 20 VAC to 120 VAC
- Group error display for internal faults (INTF) and external faults (EXTF)
- Programmable diagnostics
- Programmable diagnostic interrupt
- Programmable substitution value output

Wiring diagram of the SM 422; DO 16 x AC 20-120 V/2 A

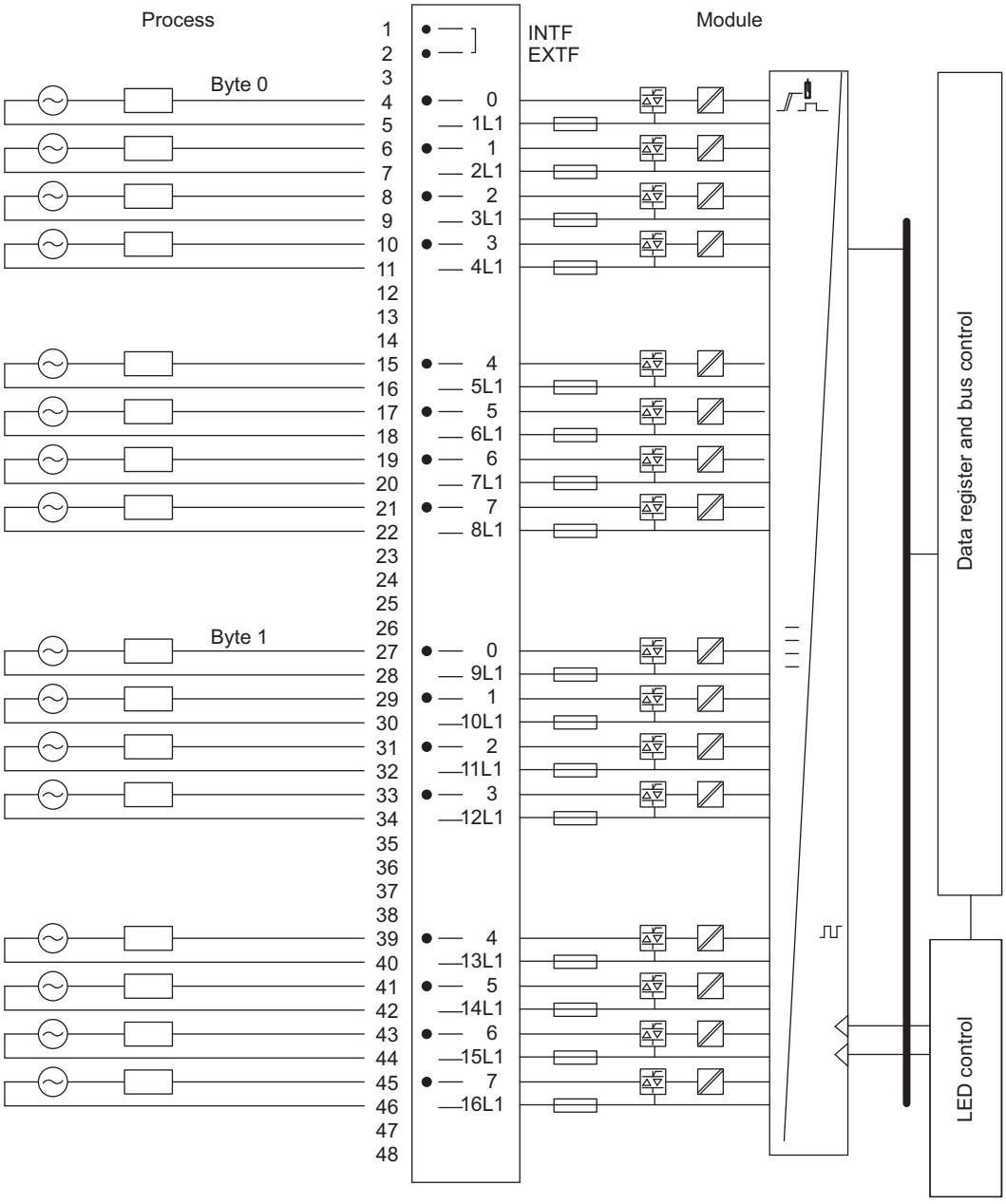

Figure 4-17 Wiring diagram of the SM 422; DO 16 x AC 20-120 V/2 A

Specifications of the SM 422; DO 16 x AC 20-120 V/2 A

Dimensions and weight	
Dimensions W x H x D (mm)	25 x 290 x 210
Weight	Approx. 800 g
Module-specific data	
Number of outputs	16

Cable length		
• Unshielded	Max. 600 m	
• Shielded	Max. 1000 m	
Voltages, currents, electrical potentials		
Nominal load voltage L+	20 to 132 VAC	
• Permitted frequency range	47 to 63 Hz	
Total current of the outputs		
		With fan subassembly
• Up to 40° C	Max. 16 A	24 A
• Up to 60° C	Max. 7 A	16 A
Electrical isolation		
• Between channels and the backplane bus	Yes	
• Between channels In groups of	Yes 1	
Permissible potential difference		
• Between M-internal and the outputs	120 VAC	
• Between outputs of different groups	250 VAC	
Isolation test voltage	1500 VDC	
Current consumption		
• From the backplane bus (5 V)	Max. 600 mA	
• From load voltage L+ (no load)	Max. 0 mA	
Power loss of the module	Typ. 20 W	
Status, interrupts, diagnostics		
Status display	Green LED per channel	
Interrupts		
• Diagnostic interrupt	Programmable	
Diagnostic functions	Programmable	
• Group error display for internal disruption for external disruption	Red LED (INTF) Red LED (EXTF)	
• Diagnostic information dump	Supported	
Injection of substitution values	Yes, programmable	
Actuator selection data		
Output voltage • With "1" signal	L1 (-1.5 Vrms)	
Output current		
• With "1" signal Nominal value Permissible range Permissible inrush current (per group)	2 A 100 mA to 2 A Maximum 20 A / 2 cycle	
• With "0" signal (residual current)	Max. 2.5 mA at 30 V Max. 4.5 mA at 132 V	
Output delay (resistive load)		
• At "0" to "1" transitions	1 ms	

• With "1" to "0"	1 AC cycle
Zero transition	Non-zero cross outputs
Size of the motor starter	Max. size 5 to NEMA
Lamp load	Max. 50 W
Wiring two outputs in parallel	
• For redundant load control	Supported (only outputs of the same group)
• For performance increase	Not supported
Triggering a digital input	Supported
Switching frequency	
• With resistive load	Max. 10 Hz
• With inductive load in accordance with IEC 947-5-1, 13 DC	Max. 0.5 Hz
• With lamp load	Max. 1 Hz
Short-circuit protection of the output	Fuse 8A/125 V 2AG (per output)
• Fuse-tripping current	Min. 40 A
• Response time	Typ. 33 ms
Replacement fuses • Littelfuse	8 A fuse, fast-blowing 225.008

Changing fuses

WARNING

This can result in injury.

If you change a fuse without removing the front connector of the module, you could be injured by an electric shock.

Consequently, always remove the front connector before you change the fuse.

4.20.2 Assigning parameters to the SM 422; DO 16 x AC 20-120 V/2 A

Parameter assignment

You will find a description of the general procedure for assigning parameters to digital modules in the respective sections.

Parameters of the SM 422; DO 16 x AC 20-120 V/2 A

You will find an overview of the parameters you can set and their default settings for the SM 422; DO 16 x AC 20-120 V/2 A in the following table.

Table 4-15 Parameters of the SM 422; DO 16 x AC 20-120 V/2 A

Parameters	Value range	Default[2]	Parameter type	Scope
Enable				
• Diagnostic interrupt[1]	Yes/no	No	Dynamic	Module
• Destination CPU for interrupt	1 to 4	-	Static	Module
Reaction to CPU STOP	Substitute a value (SV) Keep last value (KLV)	SV	Dynamic	Module
Diagnostics				
• Fuse blown	Yes/no	No	Static	Channel
Set substitution value "1"	Yes/no	No	Dynamic	Channel

[1] If you use the module in ER-1/ER-2, you must set this parameter to "No" because the interrupt lines are not available in ER-1/ER-2.

[2] Only in the CR (central rack) is it possible to start up the digital modules with the default settings.

See also

Parameters (Page 83)

4.21 Relay output module SM 422; DO 16 x UC 30/230 V/Rel. 5 A (6ES7422-1HH00-0AA0)

Properties

SM 422; DO 16 x UC 30/230 V/Rel. 5 A has the following features:

- 16 outputs, isolated in 8 groups of 2
- Output current 5 A
- Rated load voltage 230 V AC/125 V DC

The status LEDs indicate the system state even if the front connector is not connected.

Connection and circuit diagram for SM 422, DO 16 x UC 30/230 V/Rel. 5 A

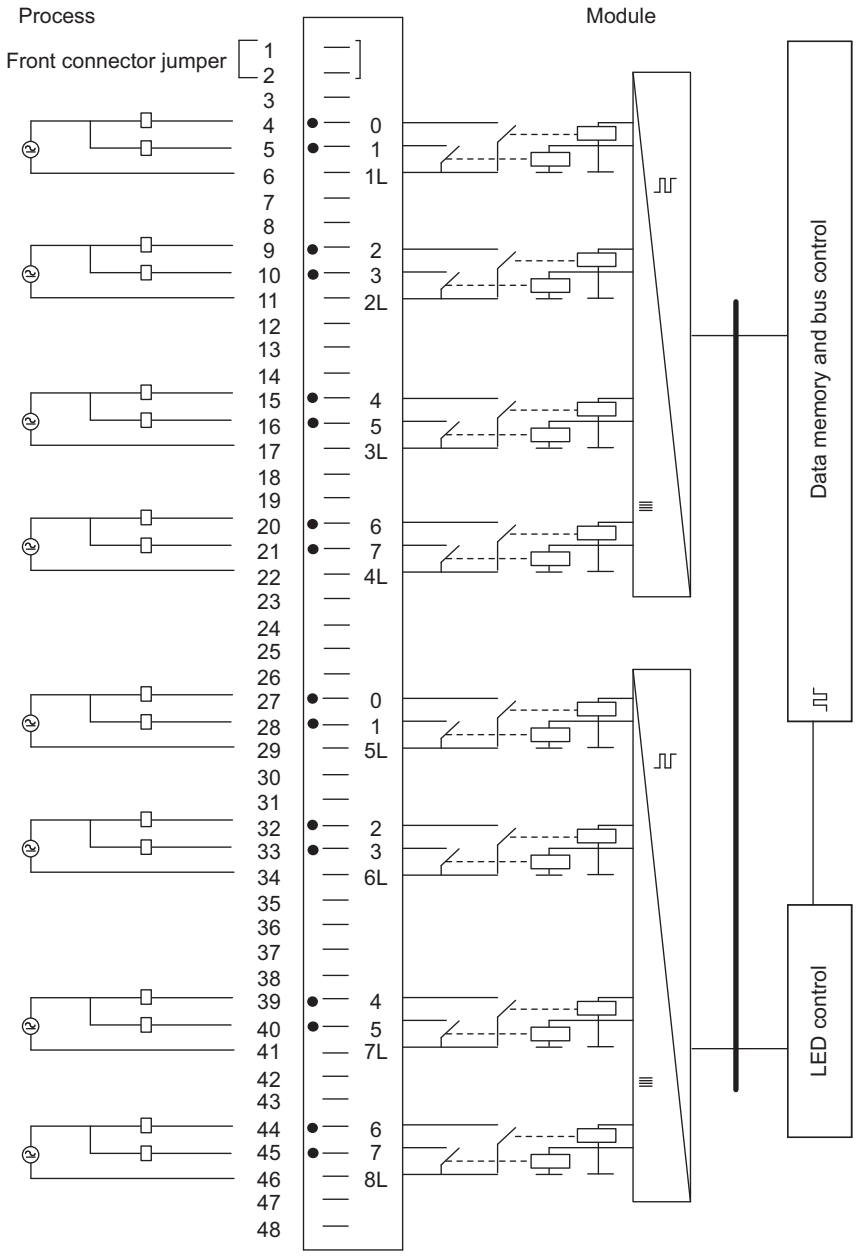

Figure 4-18 Connection and circuit diagram for SM 422, DO 16 x UC 30/230 V/Rel. 5 A

Technical specifications for SM 422, DO 16 x UC 30/230 V/Rel. 5 A

Dimensions and weight	
Dimensions W x H x D (mm)	25 x 290 x 210
Weight	ca. 700 g
Module-specific data	
Number of outputs	16

Cable length		
• unshielded	Maximum 600 m	
• shielded	max. 1000 m	
Voltage, current and potential		
Total current of outputs (per group)		
		With fan module
• Up to 40°C	Max. 10 A	10 A
• Up to 60°C	Max. 5 A	10 A
Electrical isolation		
• Between channels and backplane bus	Yes	
• Between channels in groups of	Yes 2	
Permissible potential difference		
• Between outputs of different groups	500 V AC (basic insulation) Test voltage: 1350 Vac (routine test)	
• Between Mintern and outputs	250 V AC (reinforced insulation) Test voltage: 4000 Vac (type test) 1350 AC (routine test)	
Current consumption		
• From backplane bus (5 V)	Maximum 1 A	
Module power loss	Typ. 4.5 W	
Status, interrupts, diagnostics		
Status display Interrupt Diagnostic functions	Green LED per channel None None	
Relay features		
Relay response times		
• Switch on	Maximum 10 ms typ. 5.5 ms	
• Switch off	Maximum 5 ms typ. 3 ms	
Debounce time	typ. 0.5 ms	
Data for selecting an actuator		
Thermal continuous current	Maximum 5 A	
Minimum load current	10 mA	
External fuse for relay outputs	Fuse, 6 A, quick-response	
Switching capacity and service life of contacts		
• For resistive load		

	Voltage	Current	Number of operating cycles (typ.)
	30 V DC 60 V DC 125 V DC 230 V AC	5.0 A 1.2 A 0.2 A 5.0 A	0.18 million 0.1 million 0.1 million 0.18 million
• For an inductive load in accordance with IEC 947-5-1DC 13 / AC 15			
	Voltage	Current	Number of operating cycles (typ.)
	30 V DC (τ=7 ms max.)	5.0 A	0.1 million
	230 V AC (pf=0.4)	5.0 A	0.1 million
Size of motor starter	Maximum 5 pursuant to NEMA		
Lamp load	Maximum 60 W		
Contact wiring (internal)	None		
Connection of 2 outputs in parallel			
• For redundant load control	Possible (only outputs with same load voltage)		
• For increasing the power	Not possible		
Control of a digital input	Possible		
Switching frequency			
• Mechanical	Maximum 20 Hz		
• With resistive load	Maximum 10 Hz		
• With inductive load in accordance with IEC 947-5-1, DC 13/AC 15	Maximum 1 Hz		
• With lamp load	Maximum 1 Hz		

Note

Use a suppressor circuit in environments with high humidity and where sparks might occur at the relay contacts. This will increase the service life of the relay contacts.

To install the suppressor circuit, connect an RC element or a varistor in parallel with the relay contacts or load. The dimensions depend on the size of the load.

Analog modules

5

5.1 General information

Structure

This section contains the following topics:

1. Overview of the analog modules available
2. General information concerning all analog modules (such as parameter assignment and diagnostics)
3. Information that refers to specific modules (for example, features, wiring diagram and block diagrams, specifications and special characteristics of the module):
   a) for analog input modules
   b) for analog output modules

STEP 7 blocks for analog functions

You can use blocks FC 105 and FC 106 to read and output analog values in *STEP 7*. You will find the FCs in the standard library of *STEP 7* in the subdirectory called "S5-S7 Converting Blocks" (for a description refer to the *STEP 7 Online Help* for the FCs).

Further information

The appendix describes the structure of the parameter records (data records 0 and 1) and diagnostic information (data records 0 and 1) in the system data. You must be familiar with this configuration if you want to modify the parameters of the modules in the *STEP 7* user program.

The structure of diagnostic information (data records 0 and 1) is described in the system data section of the appendix. You must be familiar with this configuration if you want to evaluate the diagnostic data of the modules in the *STEP 7* user program.

5.2 Module overview

Features of the analog modules

The tables below set out the main features of the analog modules. This summary is designed to help you select the right module for your requirements.

Table 5-1 Analog input modules: Summary of features

Properties	SM 431; AI 8 x 13 bit (-1KF00-)	SM 431; AI 8 x 14 bit (-1KF10-)	SM 431; AI 8 x 14 bit (-1KF20-)	SM 431; AI 16 x 13 bit (-0HH0-)	SM 431; AI 16 x 16 bit (-7QH00-)	SM 431; AI 8 x RTD 16 bit (-7KF10-)	SM 431; AI 8 x 16 bit (-7KF00-)
Number of inputs	8 AI for U/I measurement 4 AI for resistance measurement	8 AI for U/I measurement 4 AI for resist. / temp. measurement	8 AI for U/I measurement 4 AI for resistance measurement	16 inputs	16 AI for U/I / temp. measurement 8 AI for resistance measurement	8 inputs	8 inputs
Resolution	13 bits	14 bits	14 bits	13 bits	16 bits	16 bits	16 bits
Type of measurement	Voltage Current Resistance	Voltage Current Resistance Temperature	Voltage Current Resistance	Voltage Current	Voltage Current Resistance Temperature	Resistance	Voltage Current Temperature
Measuring principle	Integrating	Integrating	Instantaneous value encoding	Integrating	Integrating	Integrating	Integrating
Configurable diagnostics	No	No	No	No	Yes	Yes	Yes
Diagnostic interrupt	No	No	No	No	Can be set	Yes	Yes
Threshold value monitoring	No	No	No	No	Can be set	Can be set	Can be set
Hardware interrupt upon limit violation	No	No	No	No	Can be set	Can be set	Can be set
Hardware interrupt at end of cycle	No	No	No	No	Can be set	No	No
Voltage relationships	Analog section isolated from the CPU			Non-isolated	Analog section isolated from the CPU		
Maximum permitted common mode voltage	between channels or between reference potential of connected sensors and $M_{ANA:}$ 30 V AC	between channels or between channel and central grounding point: 60 V DC / 30 V AC (SELV)	between channels or between reference potential of connected sensors and $M_{ANA:}$ 8 V AC	between channels or between reference potential of connected sensors and central grounding point: 2 V DC/AC	between channels or between channel and central grounding point: 60 V DC / 30 V AC (SELV)	between channel and central grounding point: 60 V DC / 30 V AC (SELV)	between channels or between channel and central grounding point: 60 V DC / 30 V AC (SELV)

Properties	SM 431; AI 8 x 13 bit (-1KF00-)	SM 431; AI 8 x 14 bit (-1KF10-)	SM 431; AI 8 x 14 bit (-1KF20-)	SM 431; AI 16 x 13 bit (-0HH0-)	SM 431; AI 16 x 16 bit (-7QH00-)	SM 431; AI 8 x RTD 16 bit (-7KF10-)	SM 431; AI 8 x 16 bit (-7KF00-)
External power supply required	No	24 V DC (only with current, 2 DMU) [1]	24 V DC (only with current, 2 DMU) [1]	24 V DC (only with current, 2 DMU) [1]	24 V DC (only with current, 2 DMU) [1]	No	No
Special features	-	Suitable for temp. measurement Temperature sensor types configurable Linearization of sensor characteristic curves Measured value smoothing can be set	Rapid A/D change, suitable for highly dynamic processes Measured value smoothing can be set	-	Suitable for temp. measurement Temperature sensor types configurable Linearization of sensor characteristic curves Measured value smoothing can be set	Resistance thermometer configurable Linearization of sensor characteristic curves Measured value smoothing can be set	Internal measurement resistance Field connection with internal reference temperature (included in module scope of delivery) Measured value smoothing can be set

[1] 2-DMU 2-wire transducer

Table 5-2 Analog output modules: Summary of features

Properties	Module SM 432; AO 8 x 13 bit (-1HF00-)
Number of outputs	8 outputs
Resolution	13 bits
Type of output	Channel by channel: • Voltage • Current
Configurable diagnostics	No
Diagnostic interrupt	No
Substitute value output	No
Voltage relationships	Analog section isolated from: • the CPU • the load voltage
Maximum permitted common mode voltage	Between channels or between channels and M_{ANA} 3 V DC
Special features	-

5.3 Steps for commissioning analog modules

Introduction

The following table contains the tasks that you have to perform one after the other to commission analog modules successfully.

The sequence of steps is a suggestion, but you can perform individual steps either earlier or later (for example, assign parameters to the module) or install, commission etc. other modules in between times.

Steps

Table 5-3 Steps from the selection of analog modules to commissioning

Step	Procedure
1	Select the module.
2	For certain analog input modules: Set the measuring type and range using the measuring range module.
3	Mount the module in the rack.
4	Assign parameters to module.
5	Connect the measuring sensors or loads to the module.
6	Commission the configuration.
7	Analyze the configuration if commissioning failed.

5.4 Representation of analog values

5.4.1 General information

Introduction

This chapter describes the analog values for all measuring or output ranges supported by the analog modules.

Analog to digital conversion

Analog input modules convert the analog process signal into digital form.

Analog output modules convert digital output values to analog signals.

Representation of analog values at a resolution of 16 bits

The digitized analog value applies to input and output values of the same nominal range. Analog values are output as real numbers in two's complement. The resulting assignment:

Bit	**15**	**14**	**13**	**12**	**11**	**10**	**9**	**8**	**7**	**6**	**5**	**4**	**3**	**2**	**1**	**0**
Bit values	2^{15}	2^{14}	2^{13}	2^{12}	2^{11}	2^{10}	2^{9}	2^{8}	2^{7}	2^{6}	2^{5}	2^{4}	2^{3}	2^{2}	2^{1}	2^{0}

Bit 15 can be interpreted as a sign

The sign of the analog value is always set at bit 15:

- "0" → +
- "1" → -

Resolution less than 16 bits

On analog modules with a resolution of less than 16 bits, the analog value is stored left-justified. The unused least significant bit positions are padded with "0".

Example

The example below demonstrates the "0" padding of unused bit positions for low resolution values.

Table 5-4 Example: Bit pattern of a 16-bit and 13-bit analog value

Resolution	**Analog value**															
Bit	15	14	13	12	11	10	9	8	7	6	5	4	3	2	1	0
16-bit analog value	0	1	0	0	0	1	1	0	0	1	1	1	0	0	1	1
13-bit analog value	0	1	0	0	0	1	1	0	0	1	1	1	0	0	0	0

5.4.2 Representation of analog values of analog input channels

Introduction

The tables in this section contain the measured value representations for the various measuring ranges of the analog input modules. The values in the tables apply to all modules with the corresponding measuring ranges.

Notes for readers of the tables

The tables "Bipolar input ranges", "Unipolar input ranges", "Life-zero input ranges" contain the binary representation of the measured values.

The binary representation of the measured values is always the same, so the analog representation tables only compare the measuring ranges and the units.

Measured value resolution

The resolution of the analog values may differ, based on the analog module and module parameters. At resolutions < 16 bits, all bits identified by "x" are set to "0".

Note

This resolution does not apply to temperature values. The converted temperature values are the result of a conversion in the analog module (see tables for analog representation of resistance thermometer and for thermometer elements).

Table 5-5 Supported analog value resolutions

Resolution in bits	Unit decimal	Unit hexadecimal	Analog value High byte	Analog value Low byte
9	128	80_H	0 0 0 0 0 0 0 0	1 x x x x x x x
10	64	40_H	0 0 0 0 0 0 0 0	0 1 x x x x x x
11	32	20_H	0 0 0 0 0 0 0 0	0 0 1 x x x x x
12	16	10_H	0 0 0 0 0 0 0 0	0 0 0 1 x x x x
13	8	8_H	0 0 0 0 0 0 0 0	0 0 0 0 1 x x x
14	4	4_H	0 0 0 0 0 0 0 0	0 0 0 0 0 1 x x
15	2	2_H	0 0 0 0 0 0 0 0	0 0 0 0 0 0 1 x
16	1	1_H	0 0 0 0 0 0 0 0	0 0 0 0 0 0 0 1

5.4.3 Binary representation of input ranges

Input ranges

The input ranges shown in tables "Bipolar input ranges", "Unipolar input ranges", "Life-zero input ranges" are defined in complementary 2-by-2 representation:

Table 5-6 Bipolar input ranges

Units	Measured value in %	Data word																Range
		2^{15}	2^{14}	2^{13}	2^{12}	2^{11}	2^{10}	2^{9}	2^{8}	2^{7}	2^{6}	2^{5}	2^{4}	2^{3}	2^{2}	2^{1}	2^{0}	
32767	>118,515	0	1	1	1	1	1	1	1	1	1	1	1	1	1	1	1	Overflow
32511	117,589	0	1	1	1	1	1	1	0	1	1	1	1	1	1	1	1	Overshoot range
27649	>100,004	0	1	1	0	1	1	0	0	0	0	0	0	0	0	0	1	
27648	100,000	0	1	1	0	1	1	0	0	0	0	0	0	0	0	0	0	
1	0,003617	0	0	0	0	0	0	0	0	0	0	0	0	0	0	0	1	
0	0,000	0	0	0	0	0	0	0	0	0	0	0	0	0	0	0	0	Nominal range
- 1	- 0,003617	1	1	1	1	1	1	1	1	1	1	1	1	1	1	1	1	
- 27648	- 100,000	1	0	0	1	0	1	0	0	0	0	0	0	0	0	0	0	
- 27649	≤- 100,004	1	0	0	1	0	0	1	1	1	1	1	1	1	1	1	1	Undershoot range
- 32512	- 117,593	1	0	0	0	0	0	0	1	0	0	0	0	0	0	0	0	
- 32768	≤- 117,596	1	0	0	0	0	0	0	0	0	0	0	0	0	0	0	0	Underflow

Table 5-7 Unipolar input ranges

Units	Measured value in %	Data word																Range
		2^{15}	2^{14}	2^{13}	2^{12}	2^{11}	2^{10}	2^{9}	2^{8}	2^{7}	2^{6}	2^{5}	2^{4}	2^{3}	2^{2}	2^{1}	2^{0}	
32767	≧118,515	0	1	1	1	1	1	1	1	1	1	1	1	1	1	1	1	Overflow
32511	117,589	0	1	1	1	1	1	1	0	1	1	1	1	1	1	1	1	Overshoot range
27649	≧100,004	0	1	1	0	1	1	0	0	0	0	0	0	0	0	0	1	
27648	100,000	0	1	1	0	1	1	0	0	0	0	0	0	0	0	0	0	
1	0,003617	0	0	0	0	0	0	0	0	0	0	0	0	0	0	0	1	Nominal range
0	0,000	0	0	0	0	0	0	0	0	0	0	0	0	0	0	0	0	
- 1	- 0,003617	1	1	1	1	1	1	1	1	1	1	1	1	1	1	1	1	Undershoot range
- 4864	- 17,593	1	1	1	0	1	1	0	1	0	0	0	0	0	0	0	0	
-32768	≤- 17,596	1	0	0	0	0	0	0	0	0	0	0	0	0	0	0	0	Underflow

Table 5-8 Life-zero input ranges

Units	Measured value in %	Data word																Range
		2^{15}	2^{14}	2^{13}	2^{12}	2^{11}	2^{10}	2^{9}	2^{8}	2^{7}	2^{6}	2^{5}	2^{4}	2^{3}	2^{2}	2^{1}	2^{0}	
32511	117,589	0	1	1	1	1	1	1	0	1	1	1	1	1	1	1	1	Overshoot range
27649	≧100,004	0	1	1	0	1	1	0	0	0	0	0	0	0	0	0	1	
27648	100,000	0	1	1	0	1	1	0	0	0	0	0	0	0	0	0	0	Nominal range
1	0,003617	0	0	0	0	0	0	0	0	0	0	0	0	0	0	0	1	
0	0,000	0	0	0	0	0	0	0	0	0	0	0	0	0	0	0	0	
- 1	- 0,003617	1	1	1	1	1	1	1	1	1	1	1	1	1	1	1	1	Undershoot range
- 4864	- 17,593	1	1	1	0	1	1	0	1	0	0	0	0	0	0	0	0	
In the event of a wire break, the module reports $7FFF_H$																		

5.4.4 Representation of analog values in voltage measuring ranges

Table 5-9 Representation of analog values in the ±1 V to ±10 V voltage measuring ranges

System			Voltage measuring range				
	Dec.	Hex.	± 10 V	± 5 V	± 2.5 V	± 1 V	
118,515 %	32767	7FFF	11.851 V	5.926 V	2.963 V	1.185 V	Overflow
117,593 %	32512	7F00					
117,589 %	32511	7EFF	11.759 V	5.879 V	2.940 V	1.176 V	Overshoot range
	27649	6C01					
100,000 %	27648	6C00	10 V	5 V	2.5 V	1 V	Nominal range
75,000 %	20736	5100	7.5 V	3.75 V	1.875 V	0.75 V	
0,003617 %	1	1	361.7 µV	180.8 µV	90.4 µV	36.17 µV	
0 %	0	0	0 V	0 V	0 V	0 V	
	- 1	FFFF					
- 75,00 %	- 20736	AF00	- 7.5 V	- 3.75 V	- 1.875 V	- 0.75 V	
- 100,000 %	- 27648	9400	- 10 V	- 5 V	- 2.5 V	- 1 V	
	- 27649	93FF					Undershoot range
- 117,593 %	- 32512	8100	- 11.759 V	- 5.879 V	- 2.940 V	- 1.176 V	
- 117,596 %	- 32513	80FF					Underflow
- 118,519 %	- 32768	8000	- 11.851 V	- 5.926 V	- 2.963 V	- 1.185 V	

Table 5-10 Representation of analog values in the ±25 to ±500 mV voltage measuring ranges

System			Voltage measuring range					
	Dec.	Hex.	± 500 mV	± 250 mV	± 80 mV	± 50 mV	± 25 mV	
118,515 %	32767	7FFF	592.6 mV	296.3 mV	94.8 mV	59.3 mV	29.6 mV	Overflow
117,593 %	32512	7F00						
117,589 %	32511	7EFF	587.9 mV	294.0 mV	94.1 mV	58.8 mV	29.4 mV	Overshoot range
	27649	6C01						
100,000 %	27648	6C00	500 mV	250 mV	80 mV	50 mV	25 mV	Nominal range
75 %	20736	5100	375 mV	187.54 mV	60 mV	37.5 mV	18.75 mV	
0,003617%	1	1	18.08 µV	9.04 µV	2.89 µV	1.81 µV	904.2 nV	
0 %	0	0	0 mV	0 mV	0 mV	0 mV	0 mV	
	- 1	FFFF						
- 75,00 %	- 20736	AF00	- 375 mV	-187.54 mV	- 60 mV	- 37.5 mV	- 18.75 mV	
- 100,000%	- 27648	9400	- 500 mV	- 250 mV	- 80 mV	- 50 mV	- 25 mV	
	- 27649	93FF						Undershoot range
- 117,593%	- 32512	8100	- 587.9 mV	- 294.0 mV	- 94.1 mV	- 58.8 mV	- 29.4 mV	
- 117,596%	- 32513	80FF						Underflow
- 118,519%	- 32768	8000	- 592.6mV	- 296.3 mV	- 94.8mV	- 59.3 mV	- 29.6 mV	

Table 5-11 Representation of analog values in the voltage measuring ranges 1 to 5 V and 0 to 10 V

System			Voltage measuring range		
	Dec.	**Hex.**	**1 to 5 V**	**0 to 10 V**	
118,515 %	32767	7FFF	5.741 V	11.852 V	Overflow
117,593 %	32512	7F00			
117,589 %	32511	7EFF	5.704 V	11.759 V	Overshoot range
	27649	6C01			
100,000 %	27648	6C00	5 V	10 V	Nominal range
75 %	20736	5100	3.75 V	7.5 V	
0,003617 %	1	1	1 V + 144.7 µV	0 V + 361.7 µV	
0 %	0	0	1 V	0 V	
	- 1	FFFF			Undershoot range
- 17,593 %	- 4864	ED00	0.296 V	Negative values are not supported	
					Wire break
≤-17,596 %	32767	7FFF			

5.4.5 Representation of analog values in the current measuring ranges

Table 5-12 Representation of analog values in the ±3.2 mA to ±20 mA current measuring ranges

System			Current measuring range				
	Dec.	Hex.	± 20 mA	± 10 mA	± 5 mA	± 3.2 mA	
118,515 %	32767	7FFF	23.70 mA	11.85 mA	5.93 mA	3.79 mA	Overflow
117,593 %	32512	7F00					
117,589 %	32511	7EFF	23.52 mA	11.76 mA	5.88 mA	3.76 mA	Overshoot range
	27649	6C01					
100,000 %	27648	6C00	20 mA	10 mA	5 mA	3.2 mA	Nominal range
75 %	20736	5100	15 mA	7.5 mA	3.75 mA	2.4 mA	
0,003617 %	1	1	723.4 nA	361.7 nA	180.8 nA	115.7 nA	
0 %	0	0	0 mA	0 mA	0 mA	0 mA	
	- 1	FFFF					
- 75 %	- 20736	AF00	- 15 mA	- 7.5 mA	- 3.75 mA	- 2.4 mA	
- 100,000 %	- 27648	9400	- 20 mA	- 10 mA	- 5 mA	- 3.2 mA	
	- 27649	93FF					Undershoot range
- 117,593 %	- 32512	8100	- 23.52 mA	- 11.76 mA	- 5.88 mA	- 3.76 mA	
- 117,596 %	- 32513	80FF					Underflow
- 118,519 %	- 32768	8000	- 23.70 mA	- 11.85 mA	- 5.93 mA	- 3.79 mA	

Table 5-13 Representation of analog values in current measuring ranges 0 to 20 mA

System			Current measuring range	
	Dec.	Hex.	0 to 20 mA	
118,515 %	32767	7FFF	23.70 mA	Overflow
117,593 %	32512	7F00		
117,589 %	32511	7EFF	23.52 mA	Overshoot range
	27649	6C01		Nominal range
100,000 %	27648	6C00	20 mA	
75 %	20736	5100	15 mA	
0,003617 %	1	1	723.4 nA	
0 %	0	0	0 mA	
	- 1	FFFF		Undershoot range
- 17,593 %	- 4864	ED00	- 3.52 mA	
	- 4865	ECFF		Underflow
≤ - 17,596 %	- 32768	8000		

Table 5-14 Representation of analog values in current measuring ranges 4 to 20 mA

System			Current measuring range	
	Dec.	**Hex.**	**4 to 20 mA**	
118,515 %	32767	7FFF	22.96 mA	Overflow
117,593 %	32512	7F00		
117,589 %	32511	7EFF	22.81 mA	Overshoot range
	27649	6C01		Nominal range
100,000 %	27648	6C00	20 mA	
75 %	20736	5100	16 mA	
0,003617 %	1	1	4 mA + 578.7 nA	
0 %	0	0	4 mA	
	- 1	FFFF		Undershoot range
- 17,593 %	- 4864	ED00	1.185 mA	
				Wire break
≤ - 17,596 %	32767	7FFF		

5.4.6 Representation of analog values for resistance-type sensors

Table 5-15 Analog value representation for resistance-type sensors from 48 Ω to 6 kΩ

System			Resistive transducer range					
	Dec.	**Hex.**	**48 Ω**	**150 Ω**	**300 Ω**	**600 Ω**	**6 kΩ**	
118,515 %	32767	7FFF	56.89 Ω	177.77 Ω	355.54 Ω	711.09 Ω	7.11 kΩ	Overflow
117,593 %	32512	7F00						
117,589 %	32511	7EFF	56.44 Ω	176.38 Ω	352.77 Ω	705.53 Ω	7.06 kΩ	Overshoot range
	27649	6C01						
100,000 %	27648	6C00	48 Ω	150 Ω	300 Ω	600 Ω	6 kΩ	Nominal range
75 %	20736	5100	36 Ω	112.5 Ω	225 Ω	450 Ω	4.5 kΩ	
0,003617 %	1	1	1.74 mΩ	5.43 mΩ	10.85 mΩ	21.70 mΩ	217.0 mΩ	
0 %	0	0	0 Ω	0 Ω	0 Ω	0 Ω	0 Ω	
			(negative values are physically impossible)					Undershoot range

5.4.7 Representation of analog values for resistance thermometer

Representation of the analog values of Pt x00 standard resistance thermometers

Table 5-16 Representation of analog values for Pt 100/200/500/1000 resistance thermometers

Pt x00 Standard in ° C (1 digit = 0.1° C)	Unit decimal	Unit hexade-cimal	Pt x00 Standard in ° F (1 digit = 0.1 ° F)	Unit decimal	Unit hexa-decimal	Pt x00 Standard in K (1 digit = 0.1 K)	Unit decimal	Unit hexa-decimal	Range
> 1000,0	32767	$7FFF_H$	> 1832,0	32767	$7FFF_H$	> 1273,2	32767	$7FFF_H$	Overflow
1000,0 : 850,1	10000 : 8501	2710_H : 2135_H	1832,0 : 1562,1	18320 : 15621	4790_H : $3D05_H$	1273,2 : 1123,3	12732 : 11233	$31BC_H$: $2BE1_H$	Overshoot range
850,0 : -200,0	8500 : -2000	2134_H : $F830_H$	1562,0 : -328,0	15620 : -3280	$3D04_H$: $F330_H$	1123,2 : 73,2	11232 : 732	$2BE0_H$: $2DC_H$	Nominal range
-200,1 : -243,0	-2001 : -2430	$F82F_H$: $F682_H$	-328,1 : -405,4	-3281 : -4054	$F32F_H$: $F02A_H$	73,1 : 30,2	731 : 302	$2DB_H$: $12E_H$	Undershoot range
< -243,0	-32768	8000_H	< -405,4	-32768	8000_H	< 30,2	32768	8000_H	Underflow

Representation of analog values for Pt x00 climatic resistance thermometers

Table 5-17 Representation of analog values for Pt 100/200/500/1000 resistance thermometers

Pt x00 Cli-matic in °C (1 digit = 0.01° C)	Unit decimal	Unit hexa-decimal	Pt x00 Cli-matic in °F (1 digit = 0.01 °F)	Unit decimal	Unit hexa-decimal	Range
> 155,00	32767	$7FFF_H$	> 311,00	32767	$7FFF_H$	Overflow
155,00 : 130,01	15500 : 13001	$3C8C_H$: $32C9_H$	311,00 : 266,01	31100 : 26601	$797C_H$: $67E9_H$	Overshoot range
130,00 : -120,00	13000 : -12000	$32C8_H$: $D120_H$	266,00 : -184,00	26600 : -18400	$67E8_H$: $B820_H$	Nominal range
-120,01 : -145,00	-12001 : -14500	$D11F_H$: $C75C_H$	-184,01 : -229,00	-18401 : -22900	$B81F_H$: $A68C_H$	Undershoot range
< - 145,00	-32768	8000_H	< -229,00	-32768	8000_H	Underflow

Representation of analog values for Ni x00 standard resistance thermometers

Table 5-18 Analog value representation for resistance thermometers Ni100, 120, 200, 500, 1000

Ni x00 Standard in °C (1 digit = 0.1° C)	Unit decimal	Unit hexa-decimal	Ni x00 Standard in °F (1 digit = 0.1 °F)	Unit decimal	Unit hexa-decimal	Ni x00 standard in K (1 digit = 0.1 K)	Unit decimal	Unit hexa-decimal	Range
> 295,0	32767	$7FFF_H$	> 563,0	32767	$7FFF_H$	> 568,2	32767	$7FFF_H$	Overflow
295,0	2950	$B86_H$	563,0	5630	$15FE_H$	568,2	5682	1632_H	Overshoot range
:	:	:	:	:	:	:	:	:	
250,1	2501	$9C5_H$	482,1	4821	$12D5_H$	523,3	5233	1471_H	
250,0	2500	$9C4_H$	482,0	4820	$12D4_H$	523,2	5232	1470_H	Nominal range
:	:	:	:	:	:	:	:	:	
-60,0	-600	$FDA8_H$	-76,0	-760	$FD08_H$	213,2	2132	854_H	
-60,1	-601	$FDA7_H$	-76,1	-761	$FD07_H$	213,1	2131	853_H	Undershoot range
:	:	:	:	:	:	:	:	:	
-105,0	-1050	$FBE6_H$	-157,0	-1570	$F9DE_H$	168,2	1682	692_H	
< -105,0	-32768	8000_H	< -157,0	-32768	8000_H	< 168,2	32768	8000_H	Underflow

Representation of analog values for Ni x00 climatic resistance thermometers

Table 5-19 Analog value representation for resistance thermometers Ni 100, 120, 200, 500, 1000

Ni x00 Climatic in °C (1 digit = 0.01° C)	Unit decimal	Unit hexa-decimal	Ni x00 Climatic in °F (1 digit = 0.01 °F)	Unit decimal	Unit hexa-decimal	Range
> 295,00	32767	$7FFF_H$	> 325,11	32767	$7FFF_H$	Overflow
295,00 : 250,01	29500 : 25001	$733C_H$: $61A9_H$	327,66 : 280,01	32766 : 28001	$7FFE_H$: $6D61_H$	Overshoot range
250,00 : -60,00	25000 : -6000	$61A8_H$: $E890_H$	280,00 : -76,00	28000 : -7600	$6D60_H$: $E250_H$	Nominal range
-60,01 : -105,00	-6001 : -10500	$E88F_H$: $D6FC_H$	-76,01 : -157,00	-7601 : -15700	$E24F_H$: $C2AC_H$	Undershoot range
< -105,00	-32768	8000_H	< -157,00	-32768	8000_H	Underflow

Representation of analog values for Cu 10 standard resistance thermometers

Table 5-20 Representation of analog values for Cu 10 standard resistance thermometers

Cu 10 Standard in °C (1 digit = 0.01° C)	Unit decimal	Unit hexa-decimal	Cu 10 Standard in °F (1 digit = 0.01° F)	Unit decimal	Unit hexa-decimal	Cu 10 Standard in K (1 digit = 0.01 K)	Unit decimal	Unit hexa-decimal	Range
> 312,0	32767	$7FFF_H$	> 593,6	32767	$7FFF_H$	> 585,2	32767	$7FFF_H$	Overflow
312,0 : 260,1	3120 : 2601	$C30_H$: $A29_H$	593,6 : 500,1	5936 : 5001	1730_H : $12D5_H$	585,2 : 533,3	5852 : 5333	$16DC_H$: $14D5_H$	Overshoot range
260,0 : -200,0	2600 : -2000	$A28_H$: $F830_H$	500,0 : -328,0	5000 : -3280	1389_H : $F330_H$	533,2 : 73,2	5332 : 732	$14D4_H$: $2DC_H$	Nominal range
-200,1 : -240,0	-2001 : -2400	$F82F_H$: $F6A0_H$	-328,1 : -400,0	-3281 : -4000	$F32F_H$: $F060_H$	73,1 : 33,2	731 : 332	$2DB_H$: $14C_H$	Undershoot range
< -240,0	-32768	8000_H	< -400,0	-32768	8000_H	< 33,2	32768	8000_H	Underflow

Representation of analog values for Cu 10 climatic resistance thermometers

Table 5-21 Representation of analog values for Cu 10 climatic resistance thermometers

Cu 10 Climatic in °C (1 digit = 0.01° C)	Unit decimal	Unit hexadecimal	Cu 10 Climatic in °F (1 digit = 0.01° F)	Unit decimal	Unit hexadecimal	Range
> 180,00	32767	$7FFF_H$	>325,11	32767	$7FFF_H$	Overflow
180,00 : 150,01	18000 : 15001	4650_H : $3A99_H$	327,66 : 280,01	32766 : 28001	$7FFE_H$: $6D61_H$	Overshoot range
150,00 : -50,00	15000 : -5000	$3A98_H$: $EC78_H$	280,00 : -58,00	28000 : -5800	$6D60_H$: $E958_H$	Nominal range
-50,01 : -60,00	-5001 : -6000	$EC77_H$: $E890_H$	-58,01 : -76,00	-5801 : -7600	$E957_H$: $E250_H$	Undershoot range
< -60,00	-32768	8000_H	< -76,00	-32768	8000_H	Underflow

5.4.8 Representation of analog values for thermocouples

Representation of analog values for thermocouples type B

Table 5-22 Representation of analog values for thermocouples type B

Type B in °C	Unit decimal	Unit decimal	Type B in °F	Unit decimal	Unit hexa-decimal	Type B in K	Unit decimal	Unit hexa-decimal	Range
> 2070,0	32767	$7FFF_H$	>3276,6	3276,6	$7FFF_H$	> 2343,2	32767	$7FFF_H$	Overflow
2070,0 : 1821,0	20700 : 18210	$50DC_H$: 4722_H	3276,6 : 2786,6	32766 : 27866	$7FFE_H$: $6CDA_H$	2343,2 : 2094,2	23432 : 20942	$5B88_H$: $51CE_H$	Overshoot range
1820,0 : 0,0	18200 : 0	4718_H : 0000_H	2786,5 : -32,0	27865 : -320	$6CD9_H$: $FEC0_H$	2093,2 : 273,2	20932 : 2732	$51C4_H$: $0AAC_H$	Nominal range
: -120,0	: -1200	: $FB50_H$	: -184,0	: -1840	: $F8D0_H$	: 153,2	: 1532	: $05FC_H$	Undershoot range
< -120,0	-32768	8000_H	< -184,0	-32768	8000_H	< 153,2	32768	8000_H	Underflow

Representation of analog values for thermocouples type E

Table 5-23 Representation of analog values for thermocouples type E

Type E in °C	Unit dec-imal	Unit hexa-decimal	Type E in °F	Unit decimal	Unit hexa-decimal	Type E in K	Unit decimal	Unit hexa-decimal	Range
> 1200,0	32767	$7FFF_H$	> 2192,0	32767	$7FFF_H$	> 1473,2	32767	$7FFF_H$	Overflow
1200,0 : 1000,1	12000 : 10001	$2EE0_H$: 2711_H	2192,0 : 1833,8	21920 : 18338	$55A0_H$: $47A2_H$	1473,2 : 1274,2	14732 : 12742	$398C_H$: $31C6_H$	Overshoot range
1000,0 : -270,0	10000 : -2700	2710_H : $F574_H$	1832,0 : -454,0	18320 : -4540	4790_H : $EE44_H$	1273,2 : 0	12732 : 0	$31BC_H$: 0000_H	Nominal range
< -270,0	< -2700	< $F574_H$	< -454,0	< -4540	<$EE44_H$	< 0	<0	<0000_H	Underflow
Faulty wiring (polarity reversal, or open inputs, for example), or sensor error in the negative range (wrong type of thermocouple, for example) will cause the analog input module to signal underflow, starting at ...									
... $F0C4_H$, and to output 8000_H.			... $FB70_H$, and to output 8000_H.			... $E5D4_H$, and to output 8000_H.			

Representation of analog values for thermocouples type J

Table 5-24 Representation of analog values for thermocouples type J

Type J in °C	Unit decimal	Unit hexadecimal	Type J in °F	Unit decimal	Unit hexadecimal	Type J in K	Unit decimal	Unit hexadecimal	Range
> 1450,0	32767	$7FFF_H$	> 2642,0	32767	$7FFF_H$	> 1723,2	32767	$7FFF_H$	Overflow
1450,0 : 1201,0	14500 : 12010	$38A4_H$: $2EEA_H$	2642,0 : 2193,8	26420 : 21938	6734_H : $55B2_H$	1723,2 : 1474,2	17232 : 14742	4350_H : 3996_H	Overshoot range
1200,0 : -210,0	12000 : -2100	$2EE0_H$: $F7CC_H$	2192,0 : -346,0	21920 : -3460	$55A0_H$: $F27C_H$	1473,2 : 63,2	14732 : 632	$398C_H$: 0278_H	Nominal range
< -210,0	< -2100	<$F7CC_H$	< -346,0	< -3460	<$F27C_H$	< 63,2	< 632	< 0278_H	Underflow
Faulty wiring (polarity reversal, or open inputs, for example), or sensor error in the negative range (wrong type of thermocouple, for example) will cause the analog input module to signal underflow, starting at ...									
... $F31C_H$, and to output 8000_H.			... $EA0C_H$, and to output 8000_H.			... $FDC8_H$, and to output 8000_H.			

Representation of analog values for thermocouples type K

Table 5-25 Representation of analog values for thermocouples type K

Type K in °C	Unit decimal	Unit hexadecimal	Type K in °F	Unit decimal	Unit hexadecimal	Type K in K	Unit decimal	Unit hexadecimal	Range
> 1622,0	32767	$7FFF_H$	> 2951,6	32767	$7FFF_H$	> 1895,2	32767	$7FFF_H$	Overflow
1622,0 : 1373,0	16220 : 13730	$3F5C_H$: $35A2_H$	2951,6 : 2503,4	29516 : 25034	$734C_H$: $61CA_H$	1895,2 : 1646,2	18952 : 16462	$4A08_H$: $404E_H$	Overshoot range
1372,0 : -270,0	13720 : -2700	3598_H : $F574_H$	2501,6 : -454,0	25016 : -4540	$61B8_H$: $EE44_H$	1645,2 : 0	16452 : 0	4044_H : 0000_H	Nominal range
< -270,0	< -2700	< $F574_H$	< -454,0	< -4540	<$EE44_H$	< 0	< 0	< 0000_H	Underflow
Faulty wiring (polarity reversal, or open inputs, for example), or sensor error in the negative range (wrong type of thermocouple, for example) will cause the analog input module to signal underflow, starting at ...									
... $F0C4_H$, and to output 8000_H.			... $E5D4_H$, and to output 8000_H.			... $FB70_H$, and to output 8000_H.			

Representation of analog values for thermocouples type L

Table 5-26 Representation of analog values for thermocouples type L

Type L in °C	Unit decimal	Unit hexadecimal	Type L in °F	Unit decimal	Unit hexadecimal	Type L in K	Unit decimal	Unit hexadecimal	Range
> 1150,0	32767	$7FFF_H$	> 2102,0	32767	$7FFF_H$	> 1423,2	32767	$7FFF_H$	Overflow
1150,0 : 901,0	11500 : 9010	$2CEC_H$: 2332_H	2102,0 : 1653,8	21020 : 16538	$521C_H$: $409A_H$	1423,2 : 1174,2	14232 : 11742	3798_H : $2DDE_H$	Overshoot range
900,0 : -200,0	9000 : -2000	2328_H : $F830_H$	1652,0 : -328,0	16520 : -3280	4088_H : $F330_H$	1173,2 : 73,2	11732 : 732	$2DD4_H$: $02DC_H$	Nominal range
< -200,0	< -2000	< $F830_H$	< -328,0	< -3280	< $F330_H$	< 73,2	< 732	<$02DC_H$	Underflow
Faulty wiring (polarity reversal, or open inputs, for example), or sensor error in the negative range (wrong type of thermocouple, for example) will cause the analog input module to signal underflow, starting at ...									
... $F380_H$, and to output 8000_H.			... $EAC0_H$, and to output 8000_H.			... $FE2C_H$, and to output 8000_H.			

Representation of analog values for thermocouples type N

Table 5-27 Representation of analog values for thermocouples type N

Type N in °C	Unit decimal	Unit hexadecimal	Type N in °F	Unit decimal	Unit hexadecimal	Type N in K	Unit decimal	Unit hexadecimal	Range
> 1550,0	32767	$7FFF_H$	> 2822,0	32767	$7FFF_H$	> 1823,2	32767	$7FFF_H$	Overflow
1550,0 : 1300,1	15500 : 13001	$3C8C_H$: $32C9_H$	2822,0 : 2373,8	28220 : 23738	$6E3C_H$: $5CBA_H$	1823,2 : 1574,2	18232 : 15742	4738_H : $3D7E_H$	Overshoot range
1300,0 : -270,0	13000 : -2700	$32C8_H$: $F574_H$	2372,0 : -454,0	23720 : -4540	$5CA8_H$: $EE44_H$	1573,2 : 0	15732 : 0	$3D74_H$: 0000_H	Nominal range
< -270,0	< -2700	< $F574_H$	< -454,0	< -4540	<$EE44_H$	< 0	< 0	< 0000_H	Underflow
Faulty wiring (polarity reversal, or open inputs, for example), or sensor error in the negative range (wrong type of thermocouple, for example) will cause the analog input module to signal underflow, starting at ...									
... $F0C4_H$, and to output 8000_H.			... $E5D4_H$, and to output 8000_H.			... $FB70_H$, and to output 8000_H.			

Representation of analog values for thermocouple types R, S

Table 5-28 Representation of analog values for thermocouple types R, S

Type R, S in °C	Unit decimal	Unit hexa-decimal	Type R, S in °F	Unit decimal	Unit hexa-decimal	Types R, S in K	Unit decimal	Unit hexa-decimal	Range
> 2019,0	32767	$7FFF_H$	> 3276,6	32767	$7FFF_H$	> 2292,2	32767	$7FFF_H$	Overflow
2019,0 : 1770,0	20190 : 17770	$4EDE_H$: 4524_H	3276,6 : 3218,0	32766 : 32180	$7FFE_H$: $7DB4_H$	2292,2 : 2043,2	22922 : 20432	$598A_H$: $4FD0_H$	Overshoot range
1769,0 : -50,0	17690 : -500	$451A_H$: $FE0C_H$	3216,2 : -58,0	32162 : -580	$7DA2_H$: $FDBC_H$	2042,2 : 223,2	20422 : 2232	$4FC6_H$: $08B8_H$	Nominal range
-51,0 : -170,0	-510 : -1700	$FE02_H$: $F95C_H$	-59,8 : -274,0	-598 : -2740	$FDAA_H$: $F54C_H$	222,2 : 103,2	2222 : 1032	$08AE_H$: 0408_H	Undershoot range
< -170,0	-32768	8000_H	< -274,0	-32768	8000_H	< 103-2	< 1032	8000_H	Underflow

Representation of analog values for thermocouples type T

Table 5-29 Representation of analog values for thermocouples type T

Type T in °C	Unit decimal	Unit hexa-decimal	Type T in °F	Unit decimal	Unit hexa-decimal	Type T in K	Unit decimal	Unit hexa-decimal	Range
> 540,0	32767	$7FFF_H$	> 1004,0	32767	$7FFF_H$	> 813,2	32767	$7FFF_H$	Overflow
540,0 : 401,0	5400 : 4010	1518_H : $0FAA_H$	1004,0	10040	2738_H	813,2	8132	$1FC4_H$	Overshoot range
400,0 : -270,0	4000 : -2700	$0FA0_H$: $F574_H$	752,0 : -454,0	7520 : -4540	$1D60_H$: $EE44_H$	673,2 : 3,2	6732 : 32	$1AAC_H$: 0020_H	Nominal range
< -270,0	< -2700	< $F574_H$	< -454,0	< -4540	<$EE44_H$	< 3,2	< 32	< 0020_H	Underflow
Faulty wiring (polarity reversal, or open inputs, for example), or sensor error in the negative range (wrong type of thermocouple, for example) will cause the analog input module to signal underflow, starting at ...									
... $F0C4_H$, and to output 8000_H.			... $E5D4_H$, and to output 8000_H.			... $FB70_H$, and to output 8000_H.			

Representation of analog values for thermocouples type U

Table 5-30 Representation of analog values for thermocouples type U

Type U in °C	Unit decimal	Unit hexa-decimal	Type U in °F	Unit decimal	Unit hexa-decimal	Type U in K	Unit decimal	Unit hexa-decimal	Range
> 850,0	32767	$7FFF_H$	> 1562,0	32767	$7FFF_H$	> 1123,2	32767	$7FFF_H$	Overflow
850,0 : 601,0	8500 : 6010	2134_H : $177A_H$	1562,0 : 1113,8	15620 : 11138	$2738,0_H$: $2B82_H$	1123,2 : 874,2	11232 : 8742	$2BE0_H$: 2226_H	Overshoot range
600,0 : -200,0	6000 : -2000	1770_H : $F830_H$	1112,0 : -328,0	11120 : -3280	$2B70_H$: $F330_H$	873,2 : 73,2	8732 : 732	$221C_H$: $02DC_H$	Nominal range
< -200,0	< -2000	< $F830_H$	< -328,0	< -3280	< $F330_H$	< 73,2	< 732	<$02DC_H$	Underflow
Faulty wiring (polarity reversal, or open inputs, for example), or sensor error in the negative range (wrong type of thermocouple, for example) will cause the analog input module to signal underflow, starting at ...									
... $F380_H$, and to output 8000_H.			... $EAC0_H$, and to output 8000_H.			... $FE2C_H$, and to output 8000_H.			

5.4.9 Representation of analog values for analog output channels

Introduction

The tables in this section contain the analog value representation for output channels of the analog output modules. The values in the tables apply to all modules with the corresponding output ranges.

Notes for readers of the tables

The tables "Bipolar output ranges", "Unipolar output ranges", "Life-zero output ranges" contain the binary representation of the measured values.

Since the binary representation of the output values is always the same, starting with the table at "Representation of Analog Values in the Voltage Output Range ± 10 V" these tables only contain the output ranges and the units.

Binary representation of output ranges

The input ranges shown in tables "Bipolar output ranges", "Unipolar output ranges", "Life-zero output ranges" are defined in complementary 2-by-2 representation:

Table 5-31 Bipolar output ranges

Units	Output value in %	Data word																Range
		2^{15}	2^{14}	2^{13}	2^{12}	2^{11}	2^{10}	2^{9}	2^{8}	2^{7}	2^{6}	2^{5}	2^{4}	2^{3}	2^{2}	2^{1}	2^{0}	
≧32512	0 %	0	1	1	1	1	1	1	1	x	x	x	x	x	x	x	x	Overflow
32511	117,589	0	1	1	1	1	1	1	0	1	1	1	1	1	1	1	1	Overshoot range
27649	≧100,004	0	1	1	0	1	1	0	0	0	0	0	0	0	0	0	1	
27648	100,000	0	1	1	0	1	1	0	0	0	0	0	0	0	0	0	0	Nominal range
1	0,003617	0	0	0	0	0	0	0	0	0	0	0	0	0	0	0	1	
0	0,000	0	0	0	0	0	0	0	0	0	0	0	0	0	0	0	0	
- 1	-0,003617	1	1	1	1	1	1	1	1	1	1	1	1	1	1	1	1	
-27648	-100,000	1	0	0	1	0	1	0	0	0	0	0	0	0	0	0	0	
-27649	≤100,004	1	0	0	1	0	0	1	1	1	1	1	1	1	1	1	1	Undershoot range
-32512	-117,593	1	0	0	0	0	0	0	1	0	0	0	0	0	0	0	0	
≤ 32513	0 %	1	0	0	0	0	0	0	0	x	x	x	x	x	x	x	x	Underflow

Table 5-32 Unipolar output ranges

Units	Output value in %	Data word																Range
		2^{15}	2^{14}	2^{13}	2^{12}	2^{11}	2^{10}	2^{9}	2^{8}	2^{7}	2^{6}	2^{5}	2^{4}	2^{3}	2^{2}	2^{1}	2^{0}	
≧32512	0 %	0	1	1	1	1	1	1	1	x	x	x	x	x	x	x	x	Overflow
32511	117,589	0	1	1	1	1	1	1	0	1	1	1	1	1	1	1	1	Overshoot range
27649	≧100,004	0	1	1	0	1	1	0	0	0	0	0	0	0	0	0	1	
27648	100,000	0	1	1	0	1	1	0	0	0	0	0	0	0	0	0	0	Nominal range
1	0,003617	0	0	0	0	0	0	0	0	0	0	0	0	0	0	0	1	
0	0,000	0	0	0	0	0	0	0	0	0	0	0	0	0	0	0	0	
- 1	0,000	1	1	1	1	1	1	1	1	1	1	1	1	1	1	1	1	Limited to the low limit of the nominal range, 0 V or 0 mA
- 32512		1	0	0	0	0	0	0	1	0	0	0	0	0	0	0	0	
≤ 32513	0 %	1	0	0	0	0	0	0	0	x	x	x	x	x	x	x	x	Underflow

Table 5-33 Life-zero input ranges

Units	Output value in %	Data word																Range
		2^{15}	2^{14}	2^{13}	2^{12}	2^{11}	2^{10}	2^{9}	2^{8}	2^{7}	2^{6}	2^{5}	2^{4}	2^{3}	2^{2}	2^{1}	2^{0}	
≧32512	0 %	0	1	1	1	1	1	1	1	x	x	x	x	x	x	x	x	Overflow
32511	117,589	0	1	1	1	1	1	1	0	1	1	1	1	1	1	1	1	Overshoot range
27649	≧100,004	0	1	1	0	1	1	0	0	0	0	0	0	0	0	0	1	
27648	100,000	0	1	1	0	1	1	0	0	0	0	0	0	0	0	0	0	Nominal range
1	0,003617	0	0	0	0	0	0	0	0	0	0	0	0	0	0	0	1	
0	0,000	0	0	0	0	0	0	0	0	0	0	0	0	0	0	0	0	
- 1	-0,003617	1	1	1	1	1	1	1	1	1	1	1	1	1	1	1	1	Undershoot range
- 6912	-25,000	1	1	1	0	0	1	0	1	0	0	0	0	0	0	0	0	
- 6913	-25,000	1	1	1	0	0	1	0	0	1	1	1	1	1	1	1	1	Limited to overshoot range lower limit 0 V and 0 mA
- 32512		1	0	0	0	0	0	0	1	0	0	0	0	0	0	0	0	
≤-32513	- 25 %	1	0	0	0	0	0	0	0	x	x	x	x	x	x	x	x	Underflow

Representation of analog values in the voltage output ranges

Table 5-34 Representation of analog values in the ±10 V output range

System			Voltage output range	
	Dec.	**Hex.**	**±10 V**	
118,5149 %	32767	7FFF	0.00 V	Overflow, off power
	32512	7F00		
117,589 %	32511	7EFF	11.76 V	Overshoot range
	27649	6C01		
100 %	27648	6C00	10 V	
75 %	20736	5100	7.5 V	Nominal range
0,003617 %	1	1	361.7 µV	
0 %	0	0	0 V	
	- 1	FFFF	- 361.7 µV	
- 75 %	- 20736	AF00	- 7.5 V	
- 100 %	- 27648	9400	- 10 V	
	- 27649	93FF		Undershoot range
- 117,593 %	- 32512	8100	- 11.76 V	
	- 32513	80FF		Underflow, idle state
- 118,519 %	- 32768	8000	0.00 V	

Table 5-35 Representation of analog values in the 0 V to 10 V and 1 V to 5 V output ranges

System			Voltage output range		
	Dec.	**Hex.**	**0 to 10 V**	**1 to 5 V**	
118,5149 %	32767	7FFF	0.00 V	0.00 V	Overflow, off power
	32512	7F00			
117,589 %	32511	7EFF	11.76 V	5.70 V	Overshoot range
	27649	6C01			
100 %	27648	6C00	10 V	5 V	Nominal range
75 %	20736	5100	7.5 V	3.75 V	
0,003617 %	1	1	361.7 µV	1V+144.7µV	
0 %	0	0	0 V	1 V	
	- 1	FFFF			Undershoot range
- 25 %	- 6912	E500		0 V	
	- 6913	E4FF			Not possible. The output value is limited to 0 V.
- 117,593 %	- 32512	8100			
	- 32513	80FF			Underflow, idle state
- 118,519 %	- 32768	8000	0.00 V	0.00 V	

Representation of analog values in the current output ranges

Table 5-36 Representation of analog values in the ±20 mA output range

System			Current output range	
	Dec.	**Hex.**	**± 20 mA**	
118,5149 %	32767	7FFF	0.00 mA	Overflow, off power
	32512	7F00		
117,589 %	32511	7EFF	23.52 mA	Overshoot range
	27649	6C01		
100 %	27648	6C00	20 mA	
75 %	20736	5100	15 mA	Nominal range
0,003617 %	1	1	723.4 mA	
0 %	0	0	0 mA	
	- 1	FFFF	- 723.4 mA	
- 75 %	- 20736	AF00	- 15 mA	
- 100 %	- 27648	9400	- 20 mA	
	- 27649	93FF		Undershoot range
- 117,593 %	- 32512	8100	- 23.52 mA	
	- 32513	80FF		Underflow, idle state
- 118,519 %	- 32768	8000	0.00 mA	

Table 5-37 Representation of analog values in the 0 to 20 mA and 4 to 20 mA output ranges

System			Current output range		
	Dec.	**Hex.**	**0 to 20 mA**	**4 to 20 mA**	
118,5149 %	32767	7FFF	0.00 mA	0.00 mA	Overflow, off power
	32512	7F00			
117,589 %	32511	7EFF	23.52 mA	22.81 mA	Overshoot range
	27649	6C01			
100 %	27648	6C00	20 mA	20 mA	Nominal range
75 %	20736	5100	15 mA	15 mA	
0,003617 %	1	1	723.4 mA	4mA+578.7 nA	
0 %	0	0	0 mA	4 mA	
	- 1	FFFF			Undershoot range
- 25 %	- 6912	E500		0 mA	
	- 6913	E4FF			Not possible. Output value limited to 0 mA.
- 117,593 %	- 32512	8100			
	- 32513	80FF			Underflow, idle state
- 118,519 %	- 32768	8000	0.00 mA	0.00 mA	

5.5 Setting the measuring method and ranges of analog input channels

Two procedures

There are two procedures for setting the measuring method and ranges of analog input channels of analog modules:

- With a measuring range module and STEP 7
- By hardwiring the analog input channel, and programming in STEP 7

The method to use for the various analog modules is module-specific, and described in detail in the relevant module sections.

The procedure for setting the measuring method and measuring range of the module in STEP 7 is described in the respective sections.

This section describes how to set the measuring method and range using measuring range modules.

Setting the measuring method and range using measuring range modules

Analog modules are supplied with measuring range modules as required.

Reposition the measuring range modules to suit the measuring method and range.

Note

Make sure that the measuring range modules are on the side of the analog input module.

Before you install the analog input module, check the measuring method and range of the measuring range modules, and adapt these as required.

Optional settings of the measuring range modules

Optional settings of the measuring range modules are: "A", "B", "C" and "D".

For detailed information on specific measuring method and range settings, refer to the relevant module section.

The settings for the various measuring methods and ranges are also shown on the printed label of the analog module.

Replugging measuring range modules

To reconnect a measuring range module:

Graphic	Description
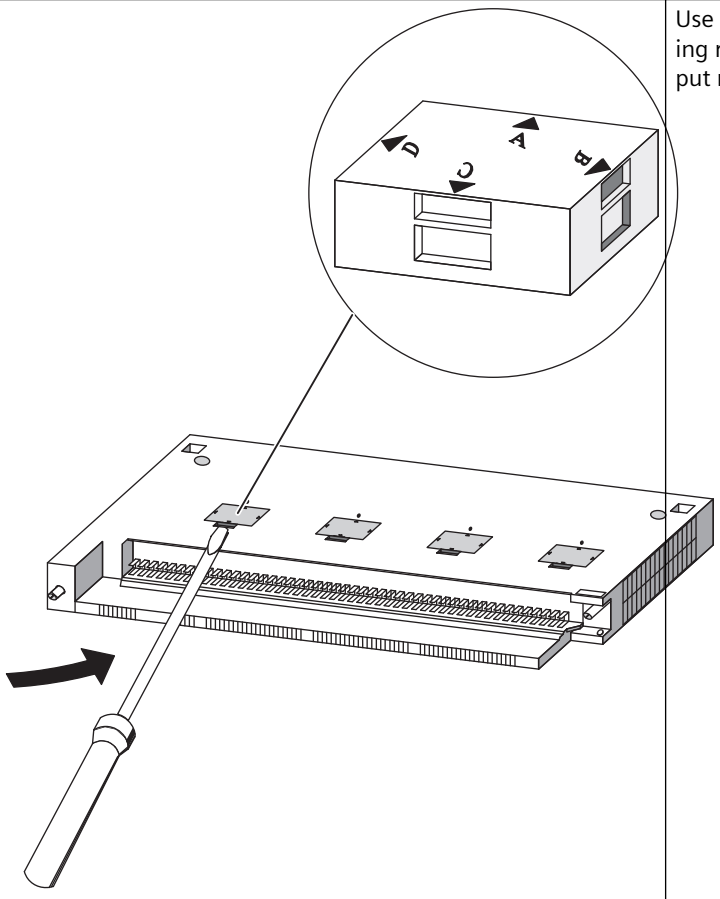	Use a screwdriver to lever the measuring range module out of the analog input module.

Graphic	Description
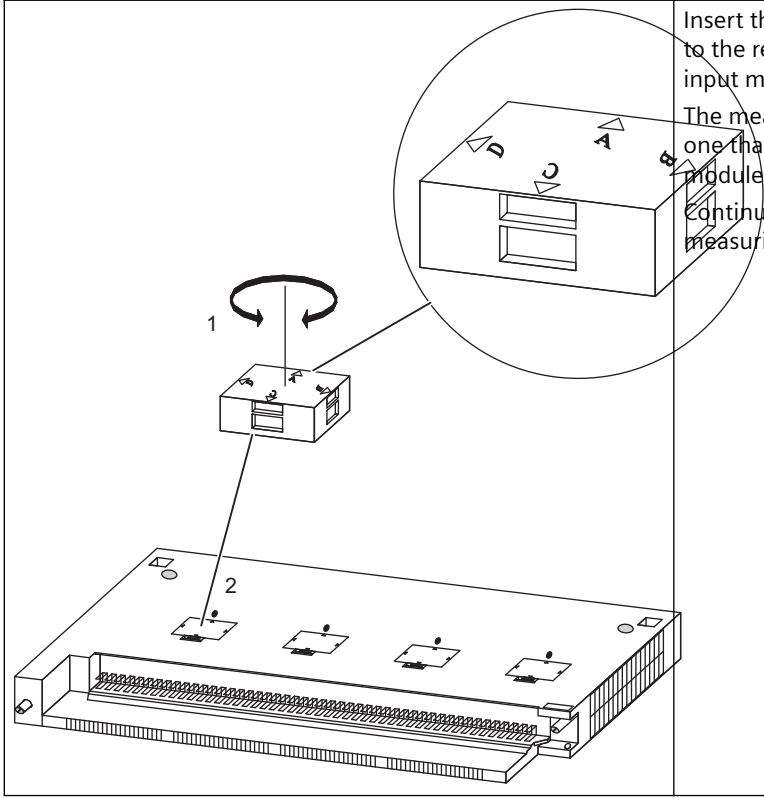	Insert the measuring range module into the required slot (1) of the analog input module. The measuring range selected is the one that points to the marker point on module (2). Continue with the insertion of all other measuring range modules.

Then mount the module.

CAUTION

Danger of damage to equipment.

Faulty measuring range module settings may lead to the destruction of the module.

Always make sure the measuring range module is in the correct position before you connect any sensors to the module.

5.6 Behavior of the analog modules

5.6.1 Introduction

Overview

This section describes:

- How the analog input and output values depend on the operating states of the CPU and the supply voltage of the analog module
- The reaction of analog modules, based on the actual analog value within the relevant value range
- The effect of errors on analog modules with diagnostics capability
- The effect of the operational limit of the analog module on the analog input and output value, as illustrated by an example

5.6.2 Effect of supply voltage and operating mode

Overview

The IO values of analog modules are determined by the CPU operating state and the module's supply voltage.

Table 5-38 Dependencies of the analog IO values on the CPU's operating State and on the L+ supply voltage

CPU operating state		Supply voltage L+ at the analog module	Output value of the analog output module	Input value of the analog input module*
POWER ON	RUN	L+ present	CPU values	Measured value
			Until the first conversion... • after power-up has been completed, a signal of 0 mA or 0 V is output. • after programming is successfully completed, it outputs the previous value.	$7FFF_H$, until the first conversion after POWER ON is completed, or when the module has been programmed.
		L+ missing	0 mA / 0 V	
POWER ON	STOP	L+ present	Substitution value / last value (default: 0 mA / 0 V)	Measured value
		L+ missing	0 mA / 0 V	$7FFF_H$, until the first conversion after POWER ON is completed, or when the module has been programmed.
POWER OFF	-	L+ present	0 mA / 0 V	-
		L+ missing	0 mA / 0 V	-
* L+ only required with 2-wire sensors				

Behavior on failure of the supply voltage

Failure of the load power supply L+ of the diagnostics-capable analog module is indicated in the case of configured 2-wire sensors by the EXTF LED on the module. This information is also available on the module (in the diagnostic buffer data.)

Diagnostics interrupt triggering is based on parameter settings.

See also

General information about parameter assignment (Page 196)

5.6.3 Effect of the value range for analog values

Effect of errors on analog modules with diagnostics capability

Errors may lead to an entry in the diagnostics buffer and trigger a diagnostic interrupt at analog modules with diagnostics function and corresponding parameter settings. You will find the errors that might be involved in the section "Diagnostics of the analog modules".

Effect of value range on the analog input module

The reaction of analog modules is determined by the actual input values within the value range.

Table 5-39 Reaction of analog input modules as a function of the actual analog value within the value range

Measured value within	Input value	LED (EXTF)	Diagnostics	Interrupt
Nominal range	Measured value	-	-	-
Overshoot/undershoot range	Measured value	-	-	-
Overflow	7FFFH	lit[1]	Entry is made[1]	Diagnostic interrupt[1]
Underflow	8000H	lit[1]	Entry is made[1]	Diagnostic interrupt[1]
Outside of the programmed limit	Measured value	-	-	Hardware interrupt[1]
[1] Only for modules with diagnostics function and depending on parameter settings				

Effect of value range on the analog output module

The reaction of analog modules is determined by the actual output values within the value range.

Table 5-40 Behavior of the analog output modules as a function of the position of the analog value within the value range

Output value within	Output value	LED (EXTF)	Diagnostics	Interrupt
Nominal range	CPU value	-	-	-
Overshoot/undershoot range	CPU value	-	-	-
Overflow	0 signal	-	-	-
Underflow	0 signal	-	-	-

5.6.4 Effect of operational limit and basic error limit

Operational limit

The operational limit represents the measuring error, or output error, of an analog module across the entire permissible temperature range of the module, based on the module's nominal range.

Basic error limit

The basic error limit represents the operational limit at 25° C, based on the module's nominal range.

Note

The percentage details of operational and basic error limits in the specifications of the modules always refer to the highest possible input and output value in the nominal range of the module. In the ± 10 V measurement range this would be the 10 V.

Example of determination of the output error of a module

An analog output module SM 432; AO 8 x 13 Bit is being used for voltage output. An output range of "±10 V" is set. The module is operating at an ambient temperature of 30° C, i.e. the operational limit applies. The specifications of the module state:

- Operational limit for voltage output: ±0,5 %

Hence, an output error of ±0.05 V (±0.5 % of 10 V) across the nominal range of the module must be expected.

This means that with an actual voltage of, say, 1 V, a value in the range from 0.95 V to 1.05 V is output by the module. The relative error is ±5 % in this case.

For the example, the figure below shows how the relative error decreases as the output value approaches the end of the 10V range.

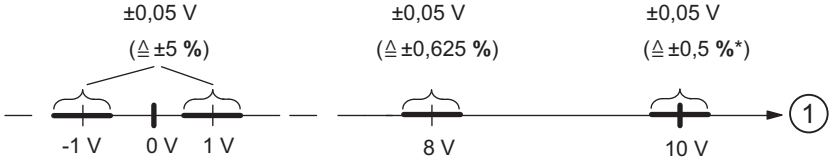

Figure 5-1 Example of the relative error of an analog output module

* Operational limit

(1) Output value

5.7 Conversion, cycle, settling and response time of analog modules

Conversion time of analog input channels

The conversion time is the total of the basic conversion time plus additional processing times of the module for:

- Resistance measurement
- Wire break monitoring

The basic conversion time depends directly on the conversion method of the analog input channel (integrating method, actual value conversion.)

The integration time of integrating conversions has a direct influence on conversion times. The integration time depends on the interference frequency suppression you set in STEP 7.

For information on basic conversion times and additional processing times of the various analog modules, refer to the specifications of the relevant module.

Cycle time of analog input channels

The analog/digital conversion and the transfer of the digitized measured values to memory or to the backplane bus take place sequentially. In other words, the analog input channels are converted one after the other. The scan time - in other words, the time elapsing until an analog input value is again converted - is the sum of the conversion times of all activated analog input channels of the analog input module.

The figure below provides an overview of the cycle time elements for an n-channel analog module.

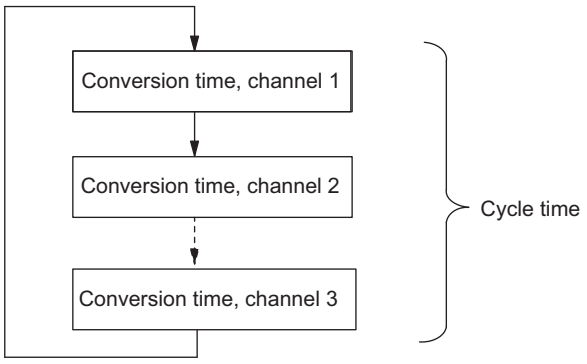

Figure 5-2 Scan time of an analog input or output module

Basic execution time of the analog input channels

The basic execution time corresponds to the cycle time for all the enabled channels.

Setting of the smoothing of analog values

You can set the smoothing of the analog values in STEP 7 for some analog input modules.

Use of smoothing

Smoothing of analog values ensures a stable analog signal for further processing.

It makes sense to smooth the analog values with slow variations of measured values, for example, with temperature measurements.

Smoothing principle

The measured values are smoothed by digital filtering. Smoothing is accomplished by the module calculating mean values, derived from a defined number of converted (digitized) analog values.

The user assigns parameters to smoothing with a maximum of four levels (none, weak, medium, strong). The grade determines the number of analog signals used for averaging.

A higher smoothing provides a more reliable analog value, and prolongs the time it takes to apply a smoothed analog signal following a step response (see the example below.)

Example

The figure below shows the number of cycles a module requires to apply an almost 100% analog value after a step response, based on the smoothing function settings. The figure applies to all signal changes at the analog input.

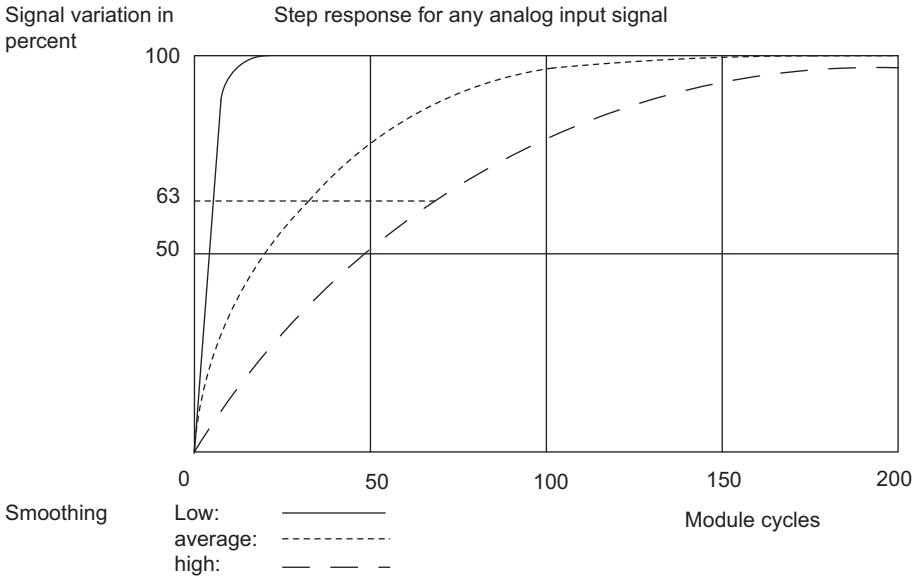

Figure 5-3 Example of the effect of smoothing on step responses

Further information on smoothing

For information showing whether a specific module supports smoothing functions, and special features to observe, refer to the section dealing with the analog input module.

Conversion time of the analog output channels

The conversion time of the analog output channels includes the transfer of digitized output values from internal memory, and their digital-to-analog conversion.

Cycle time of analog output channels

The analog output channels are converted sequentially - that is the analog output channels are converted one after the other.

The cycle time - that is the time expiring until an analog output value is converted again, is equivalent to the accumulated conversion times of all activated analog output channels. Refer to the figure "Cycle Time of an Analog Input/Output Channel".

Basic execution time of the analog output channels

The basic execution time corresponds to the cycle time for all the enabled channels.

Note

You should disable any analog channels that are not being used to reduce the scan time in STEP 7.

Overview of the settling time and response time of the analog output modules

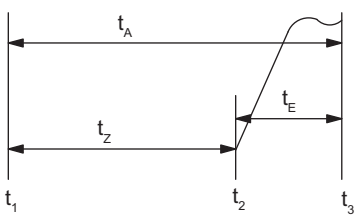

Figure 5-4 Settling and response times of the analog output channels

t_A = Response time

t_S = Setting time

t_3 = Specified output value reached

t_2 = Output value transferred and converted

t_C = Cycle time, corresponds to n x conversion time (n = activated channels)

t_1 = New output value is present

Settling time

The settling time (t_2 to t_3) - that is the time from the application of the converted value until the specified value is obtained at the analog output - depends on the load. We therefore distinguish between resistive, capacitive and inductive load.

For information on settling times as a function of load at the various analog output modules, refer to the specifications of the relevant module.

Response time

The response time (t_1 to t_3) - that is the time from the application of the digital output values in internal memory until the specified value is obtained at the analog output - is, in the most unfavorable case, the sum of the cycle time and the settling time.

The worst case scenario is given, when the analog channel has been converted immediately before a new output value is transferred, and is not converted again until all other channels have been converted (cycle time.)

See also

Commissioning the SM 431; AI 8 x 13 Bit (Page 230)

5.8 Assigning parameters to analog modules

5.8.1 General information about parameter assignment

Introduction

The characteristics of analog modules may differ. The characteristics of the modules can be defined by assigning parameters.

Tools for parameter assignment

You program analog modules in *STEP 7*.

After you have defined all parameters, download these from your programming device to the CPU. The CPU transfers the parameters to the relevant analog modules at the STOP > RUN transition.

Static and dynamic parameters

The parameters are divided into static and dynamic parameters.

Set the static parameters in STOP mode of the CPU, as described above.

You may also edit dynamic parameters in the active user program of an S7 PLC using SFCs. However, the parameters set in *STEP 7* will be applied again after a RUN > STOP, STOP > RUN transition of the CPU. You will find a description of the parameter assignment of modules in the user program in the Appendix.

Configuration in RUN (CiR)

CiR (Configuration in RUN) is a method you can use to modify your system or edit the parameters of individual modules. These changes are made while your system is in operation, that is, your CPU will stay in RUN over a maximum of 2.5 seconds while these changes are applied.

For detailed information on this topic, refer to the "Configuration in RUN by means of CiR" manual. This manual is found, for example, as a file in PDF format on the STEP 7 CD supplied.

5.8.2 Parameters of analog input modules

Overview

Analog input modules use a subset of the parameters and value range listed in the table below, based on their functionality. For information on subsets "supported" by specific analog modules, refer to the section dealing with the relevant module.

The defaults apply if you have not set any parameters in *STEP 7*.

Table 5-41 Parameters of analog input modules

Parameters	Value range		Default[2]	Parameter type	Scope
Enable					
• Diagnostic interrupt[1]	Yes/no		No	Dynamic	Module
• Hardware interrupt[1]	Yes/no		No		
• Destination CPU for interrupt	1 to 4		-	Static	Module
Hardware interrupt trigger					
• End of scan cycle reached at input	Yes/no		No	Static	Channel
	May be restricted by the measuring range				
• High limit	32511 to - 32512		-	Dynamic	Channel
• Low limit	-32512 to 32511				
Diagnostics					
• Wire break	Yes/no		No	Static	Channel
• Reference channel error	Yes/no		No		
• Underflow	Yes/no		No		
• Overflow	Yes/no		No		
• Short-circuit to M	Yes/no		No		
Measurement					
• Measuring method	Disabled		U	Static	Channel
	U	Voltage			
	4DMU	Current (4-wire sensor)			
	2DMU	Current (2-wire sensor)			
	R-4L	Resistance (4-conductor connection)			
	R-3L	Resistance (3-conductor connection)			
	RTD-4L	Thermal resistance (linear, 4-conductor connection)			
	RTD-3L	Thermal resistance (linear, 3-conductor connection)			
	TC-L	Thermocouple (linear)			

Parameters	Value range	Default[2]	Parameter type	Scope
• Measuring range	For information on configurable measuring ranges of the input channels, refer to the relevant module description.	± 10 V		
• Reference temperature	- 273.15 to 327.67° C	0° C	Dynamic	Module
• Temperature unit	Degrees Celsius; degrees Fahrenheit; Kelvin	Degrees Celsius	Static	Module
• Temperature coefficient for temperature measurement with thermal resistance (RTD)	Platinum (Pt) 0.00385 Ω/Ω/° C 0.003916 Ω/Ω/° C 0.003902 Ω/Ω/° C 0.003920 Ω/Ω/° C Nickel (Ni) 0.00618 Ω/Ω/° C 0.00672 Ω/Ω/° C	0,00385	Static	Channel
• Interference frequency suppression	400 Hz; 60 Hz; 50 Hz; 10 Hz; none	50 or 60 Hz		
• Smoothing	None Weak Medium Strong	None		
• Reference junction	None internal RTD on channel 0 dynamic reference temperature value	None		

[1] If you use the module in ER-1/ER-2, you must set this parameter to "No" because the interrupt lines are not available in ER-1/ER-2.

[2] Only in the CR (central rack) is it possible to start up the analog modules with the default settings.

See also

Commissioning the SM 431; AI 8 x 14 Bit (Page 242)

5.8.3 Parameters of analog output modules

Overview

Analog output modules use a subset of the parameters and value range listed in the table below, based on their functionality. For information on subsets "supported" by specific analog modules, refer to the section dealing with the relevant module.

The default settings apply if you have not set any parameters in STEP 7.

Table 5-42 Parameters of analog output modules

Parameters	Value range	Default setting[1]	Parameter type	Scope
Output				
• Output type	Deactivated voltage current	U	Static	Channel
• Output range	For information on configurable measuring ranges of output channels, refer to the relevant module description.	± 10 V		
[1] Only in the CR (central rack) is it possible to start up the analog modules with the default settings.				

See also

Commissioning the SM 431; AI 8 x 14 Bit (Page 242)

5.9 Connecting sensors to analog inputs

Introduction

The analog input modules support various sensors, such as voltage/current sensors, and resistors, depending on the set measuring method.

This section contains general information that is generally applicable to all the connection options for sensors described in the sections that follow.

Cables for analog signals

Always use shielded twisted-pair cables to wire analog signals. This reduces interference. Connect both ends of the analog cable shield to ground.

If there are potential differences between the cable ends, an equipotential bonding current, which can flow over the shield, can cause interference of the analog signals. To avoid this situation, you should ground the shield only at one end of the cable.

Non-isolated analog input modules

In the case of the non-isolated analog input modules there is an electrical connection between the reference point of the measuring circuit M_{ANA} and chassis ground.

You use non-isolated analog modules if there are few or no potential differences between the measuring sensors and chassis ground.

Isolated analog input modules

With the isolated analog input modules there is no electrical connection between the reference point of the measuring circuit M_{ANA} and chassis ground.

You use isolated analog input modules if a potential difference U_{ISO} can occur between the reference point of the measuring circuit M_{ANA} and chassis ground. By means of an equipotential bonding conductor between the M_{ANA} terminal and chassis ground, make sure that U_{ISO} does not exceed the permitted value.

Limited potential difference U_{CM}

Only a limited potential difference U_{CM} (common mode voltage) may occur amongst the M-measuring lines of the input channels and between the leads and the reference point of the measuring circuit M_{ANA}. In order to prevent the permissible value from being exceeded, you must take different actions, described below, depending on the potential connection of the sensors.

Connecting electrically isolated sensors

The isolated sensors are not connected with the local ground potential (chassis ground). They can be floating.

With isolated sensors, potential differences might arise between the different sensors. These potential differences can arise as a result of interference or the local distribution of the sensors.

To ensure that the permissible value for U_{CM} is not exceeded during use in heavily EMC-affected environments, connect M- to MANA in modules with an M_{ANA} connection.

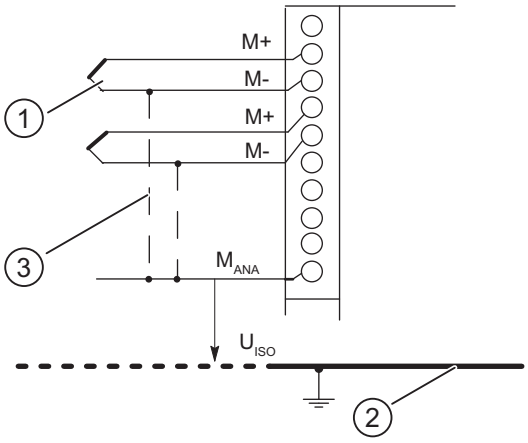

Figure 5-5 Connecting isolated sensors to an electrically isolated AI

(1) Electrically isolated sensors

(2) Chassis ground

(3) Connection required for modules with M_{ANA}

M +: Measuring line (positive)

M -: Measuring line (negative)

M_{ANA}: Reference potential of the analog measuring circuit

U_{ISO}: Potential difference between M_{ANA} and chassis ground

Note

Do not connect M- to MANA when connecting 2-wire transducers for current measurement and when connecting resistance-type sensors. This also applies to inputs which are programmed accordingly, but remain unused.

Non-isolated sensors

The isolated sensors are not connected with the local ground potential (chassis ground). When using non-isolated sensors, you must connect M_{ANA} to chassis ground.

Connecting non-isolated sensors

Depending on local conditions or interference, potential differences U_{CM} (static or dynamic) can occur between the locally distributed measuring points. If the permitted value for U_{CM} is exceeded, there must be equipotential bonding conductors between the measuring points.

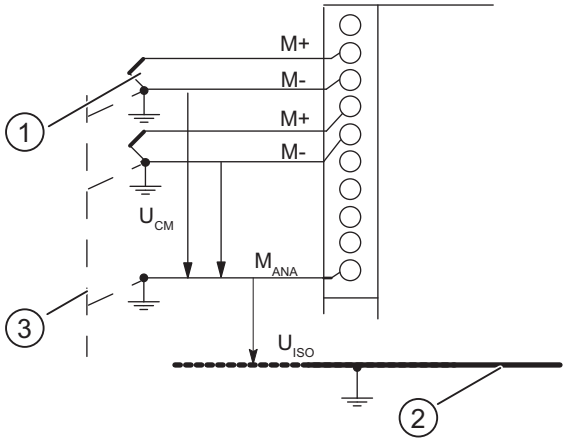

Figure 5-6 Connecting non-isolated sensors to an isolated AI

(1) Non-isolated sensors

(2) Chassis ground

(3) Equipotential bonding conductor

M +: Measuring line (positive)

M -: Measuring line (negative)

M_{ANA}: Reference potential of the analog measuring circuit

U_{ISO}: Potential difference between M_{ANA} and chassis ground

Note

Do not use non-isolated 2-wire transducers and non-isolated resistance-type sensors!

5.10 Connecting voltage sensors

Connecting voltage sensors

Note

The cables required to connect the analog input module and the sensors are not drawn in the figures shown below.

In other words, you must continue to read and follow the instructions in the section "Connecting sensors to analog inputs", which contains general information on connecting sensors.

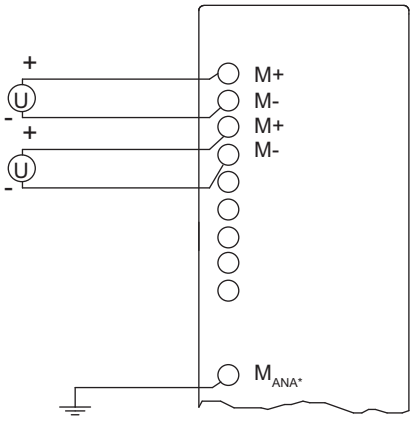

Figure 5-7 Connecting voltage sensors to an AI

M +: Measuring line (positive)

M -: Measuring line (negative)

M_{ANA}: Reference potential of the analog measuring circuit

(1) Connection required for modules with M_{ana}

5.11 Connecting current sensors

Sensor supply voltage

Note

The cables required to connect the analog input module and the sensors are not drawn in the figures shown below.

In other words, you must continue to read and follow the instructions in the section "Connecting sensors to analog inputs", which contains general information on connecting sensors.

The 2-wire sensor is wired to a short-circuit-proof supply voltage at the terminals of the analog input module. This 2-wire transducer then converts the measured variable into a current.

Because the 2-wire transducer is supplied by the module, you must **not** ground the M- cables.

4-wire transducers require a separate supply voltage U_H (auxiliary supply).

Connecting 2-wire transducers

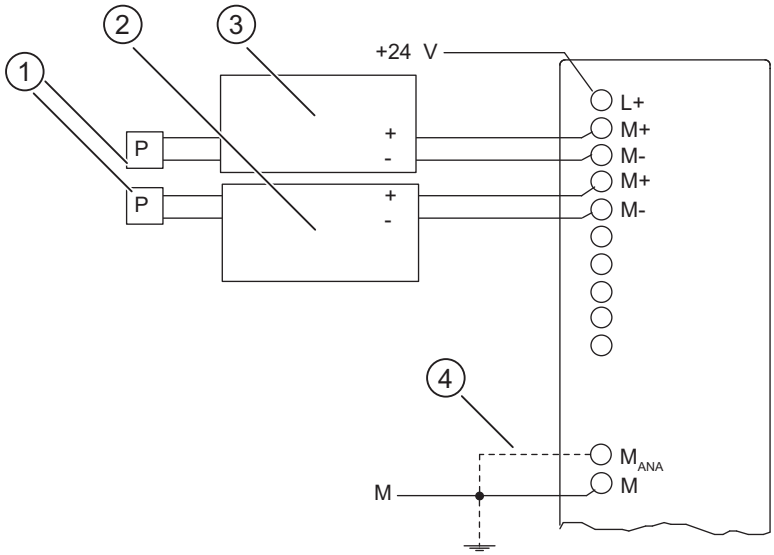

Figure 5-8 Connecting 2-wire transducers to an isolated AI

M +:	Measuring line (positive)
M -:	Measuring line (negative)
L +:	Power supply connection 24 VDC
M_{ANA}:	Reference potential of the analog measuring circuit
(1)	Sensor, for example, pressure gauge
(2) + (3)	2-wire transducer
(4)	Connection required for modules with M_{ana}

SM 431; 8 x 13 Bit: Connecting 2-wire transducers

Because the supply voltage for the 2-wire transducers is not fed by the SM 431; 8 x 13 Bit, you must supply the sensors separately with 24 V.

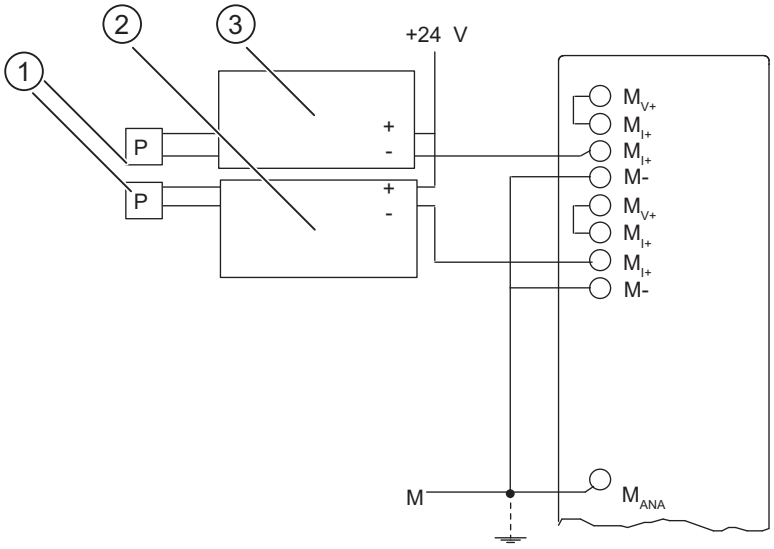

Figure 5-9 Connecting 2-wire transducers to an SM 431; 8 x 13 Bit

M_{I+}:	Measuring current (positive)
M_{V+}:	Measuring voltage (positive)
M +:	Measuring line (positive)
M_{ANA}:	Reference potential of the analog measuring circuit
M -:	Measuring line (negative)
(1)	Sensor, for example, pressure gauge
(2)+(3)	2-wire transducer

Connecting 4-wire transducers

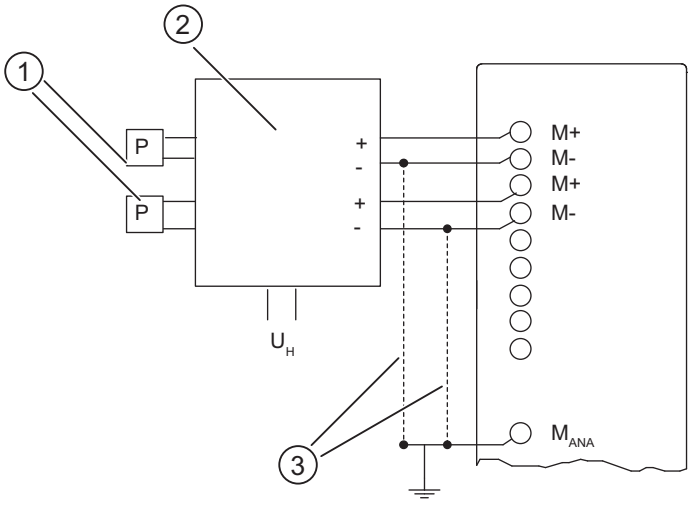

Figure 5-10 Connecting 4-wire transducers to an AI

M +: Measuring line (positive)
M -: Measuring line (negative)
M_{ANA}: Reference potential of the analog measuring circuit
U_H: Auxiliary voltage
(1) Sensor, for example, pressure gauge
(2) 4-wire transducer
(3) Connection required for modules with M_{ana}

SM 431; 8 x 13 Bit: Connecting 4-wire transducers

To ensure that the permissible value for U_{CM} is not exceeded, you must connect the M-cables to M_{ANA}.

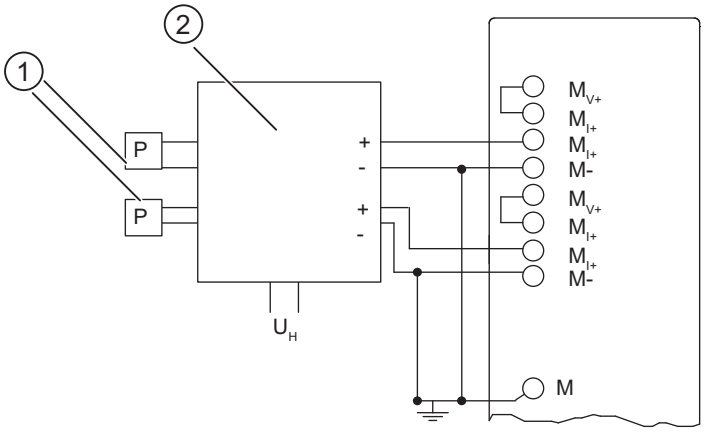

Figure 5-11 Connecting 4-wire transducers to an SM 431; 8 x 13 Bit

M_{I+}: Measuring current (positive)
M_{V+}: Measuring voltage (positive)
M +: Measuring line (positive)
M -: Measuring line (negative)
U_H: Auxiliary voltage
(1) Sensor, for example, pressure gauge
(2) 4-wire transducer

5.12 Connecting resistance thermometers and resistors

Connecting resistance thermometers and resistors

Note

The cables required to connect the analog input module and the sensors are not drawn in the figures shown below.

In other words, you must continue to read and follow the instructions in the section "Connecting sensors to analog inputs", which contains general information on connecting sensors.

Resistance thermometers/resistors are wired in 2-, 3- or 4-wire technique.

With 4-conductor and 3-conductor connections, the module supplies a constant current via terminals I_{C+} and I_{C-} so that the potential drop occurring on the measuring cables is compensated. It is imperative to wire the constant current cables directly to the resistance thermometer/resistor.

Compensated measurements with 3- or 4-wire elements return a more precise result compared to 2-wire measurements.

4-conductor connection of a resistance thermometer

The voltage generated at the resistance thermometer is measured via the M_+ and M_- terminals. When you connect, watch out for the polarity of the connected cable (connect I_{C+} and M+ as well as I_{C-} and M- to the resistance thermometer).

Make sure that the connected cables **I_C+ and M+** and**SO and SE+** and cables **I_C- and M-** and **AGND and SE-** are connected directly on the resistance thermometer.

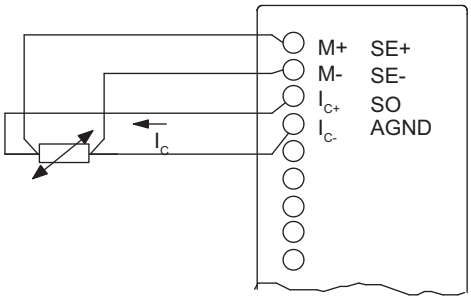

Figure 5-12 4-conductor connection of a resistance thermometer to an AI

I_{C+}	Constant current line (positive)
I_{C-}	Constant current line (negative)
M_+	Measuring line (positive)
M_-	Measuring line (negative)

3-conductor connection of a resistance thermometer

With a 3-conductor connection to modules with 4 terminals per resistance thermometer, you must set up a **jumper between M- and I_C-** and **SE- and AGND** (see Figure).

The module compensates in this circuit for the effect of the line resistance between the module and the resistance thermometer/resistor.

Make sure that the connected cables **I_C+ and M+** and **SO and SE+** are directly connected to the resistance thermometer.

To get an accurate measurement, make sure that the connected cables **M+, I_C+ and I_C-** and **SE +, SO and AGND** are the same length and have the same cross-section.

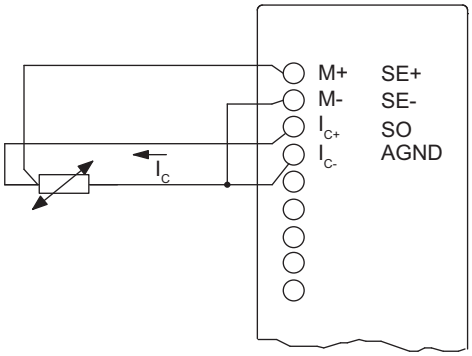

Figure 5-13 3-conductor connection of a resistance thermometer to an electrically isolated analog input

I_{C+}	Constant current line (positive)
I_{C-}	Constant current line (negative)
M_+	Measuring line (positive)
M_-	Measuring line (negative)

2-conductor connection of a resistance thermometer

For 2-conductor connections, bridge the M_+ and I_{C+}, and the M_- and I_{C-} terminals of the module.

Note: Cable resistance is also measured.

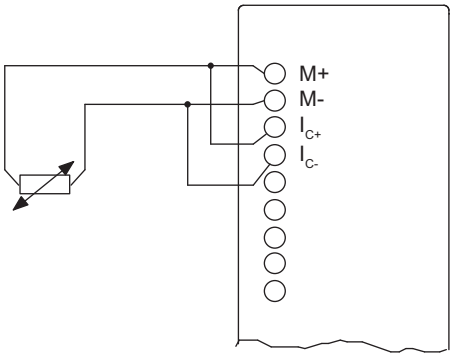

Figure 5-14 2-conductor connection of a resistance thermometer to an electrically isolated analog input

I_{C+}	Constant current line (positive)
I_{C-}	Constant current line (negative)
M_+	Measuring line (positive)
M_-	Measuring line (negative)

5.13 Connecting thermocouples

Thermocouple design

Thermocouples consist of a pair of thermal probes, and all necessary installation and connecting parts. The thermocouple consists of two wires of dissimilar metals or metal alloys soldered or welded together at the ends.

There are different types of thermocouple, depending on the composition of the material used, for example, K, J, N thermocouples. The measuring principle of all thermocouples is the same, irrespective of their type.

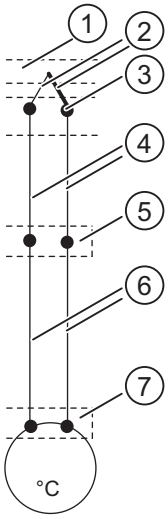

(1) Measuring junction
(2) Thermocouple with positive or negative limbs
(3) Connecting point
(4) Compensating leads
(5) Reference junction
(6) Leads
(7) Measurement input

Figure 5-15 Thermocouple design

Operating principle of thermocouples

If the measuring point is subjected to a temperature different from that of the free ends of the thermocouple (point of connection), a voltage, the thermo e.m.f., occurs at the free ends. The magnitude of the thermo-e.m.f. generated depends on the difference between the temperature at the measuring junction and the temperature at the free ends, as well as on the material combination used for the thermocouple.

Since a thermocouple always measures a temperature difference, the free ends must be kept at a known temperature at a reference junction in order to determine the temperature of the measuring junction.

The thermocouples can be extended from their point of connection to the reference junction by means of compensating wires. These compensating wires are made of the same materials as the thermocouple wires. The supply lines are made of copper.

Note

Make sure that the polarity is correct, otherwise significant measuring errors will occur.

Compensation of the reference junction temperature

There are several options for you to choose from for acquiring the reference junction temperature in order to obtain an absolute temperature value from the difference in temperature between the reference junction and measuring point.

You can use internal or external compensation, depending on where you want the reference junction to be.

The last column of the following table lists the feature you must set for the "Reference Junction" parameter in STEP 7. The reference temperature value is a separate parameter in STEP 7.

Options for compensation of the reference junction temperature

Option	Explanations	Reference junction
No compensation	When you want to acquire only the difference in temperature between the measuring point and the reference junction	None
Internal compensation	If you employ internal compensation, the internal temperature of the module is used for comparison purposes.	Internal
External compensation with a compensating box in leads of an individual thermocouple	You have already acquired and compensated the reference junction temperature using a compensating box, which you have looped into an individual thermocouple. Further processing at the module is not required.	None
External compensation with a resistance thermometer to obtain the reference junction temperature **(recommended method)**	You can acquire the reference temperature by means of a resistance thermometer (pt 100) and have it calculated by the module for any thermocouple.	RTD on Channel 0
External compensation with a resistance thermometer when thermocouples with the same reference junction are divided amongst several modules	Use a resistance thermometer on a module that measures the reference junction temperature. Read in the climatic temperature value to the CPU and transfer the value to the other modules using SFC55.	RTD on Channel 0
Constant reference junction temperature (thermometer, ice bath)	If the reference junction temperature is constant and known, you can specify this value in parameter assignment in STEP 7.	Reference temperature value

Principle of operation of internal compensation

Internal compensation allows you to form the reference point at the terminals of the analog input module. In this case, route the compensating lines directly to the analog module. The internal temperature sensor measures the module's temperature and returns a compensation voltage.

Note: internal compensation is not as accurate as external compensation.

Principle of operation of external compensation with compensating box

If you employ external compensation, the temperature of the reference junction of the thermocouples is taken into account via a compensating box, for example.

The compensating box contains a bridge circuit calibrated for a definite reference junction temperature. The reference junction is formed by the connecting ends of the thermocouple's compensating lines.

The resistance of the temperature-sensitive bridge changes as a function of the difference between the actual reference temperature and calibrating temperature. This difference induces a positive or negative compensating voltage, which is added to the thermal voltage.

Note

The diagrams below do not show the connecting lines required for connecting the electrical potentials of the analog input module and the sensors. This means that you must still read and follow the instructions in the generally applicable information on connecting sensors.

Connection of thermocouples without compensation or using the reference temperature value

Wire the thermocouples either directly to the inputs of the module, or indirectly via compensating lines. Each channel can use a thermocouple type supported by the analog module independently of the other channels.

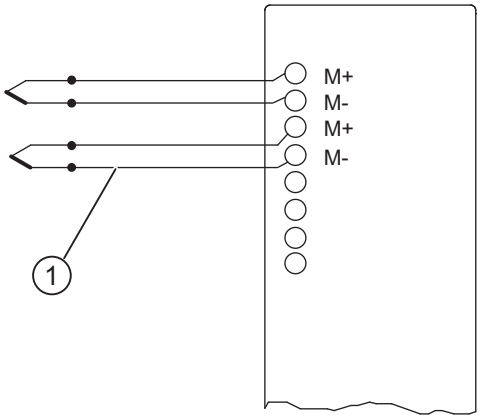

M $_+$: Measuring line (positive)

M $_-$: Measuring line (negative)

(1) Compensating leads (same material as thermocouple)

Figure 5-16 Connection of thermocouples without compensation or using the reference temperature value to an isolated AI

Connecting the compensating box

The compensating box is looped in through the leads of each thermocouple. The compensating box must be supplied on an isolated basis. The power supply module must provide adequate noise filtering, for example, by means of grounded cable shielding.

Each channel can use a thermocouple type supported by the analog module independently of the other channels. Each channel requires its own compensating box.

Note

Use compensating boxes with a reference junction temperature of 0° C for analog input modules.

Connecting thermocouples using resistance thermometers

Connect the resistance thermometer to channel 0 of the module. Make sure that you configure the "RTD on Channel 0" reference junction in STEP 7 for each channel that has a thermocouple connected to it.

If all thermocouples connected to the module's inputs share a common reference junction, compensate the circuit as follows:

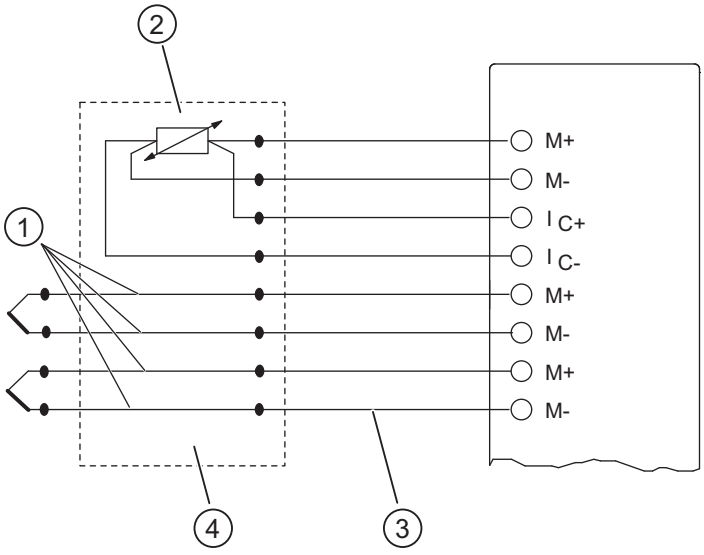

M_+: Measuring line (positive)

M_-: Measuring line (negative)

I_{C+}: Constant current line (negative)

I_{C+}: Constant current line (negative)

(1) Compensating leads (same material as thermocouple)

(2) RTD on Channel 0

(3) Incoming line (Cu)

(4) Reference junction

Figure 5-17 Connection of thermocouples of the same type with external compensation by means of a resistance thermometer, connected to channel 0

5.14 Connecting loads/actuators to analog outputs

Introduction

The analog output modules can be used to supply power to loads and actuators.

This section contains general information that is generally applicable to all the connection options for loads and actuators described in the sections that follow.

Cables for analog signals

Always use shielded twisted-pair cables to wire analog signals. Form two twisted pairs of the Q_V and S+, and M and S- signals. This reduces interference. Connect both ends of the analog cable shield to ground.

If there are potential differences between the cable ends, an equipotential bonding current, which can flow over the shield, can cause interference of the analog signals. To avoid this situation, you should ground the shield only at one end of the cable.

Isolated analog output modules

With the isolated analog output modules there is no electrical connection between the reference point of the measuring circuit M_{ANA} and chassis ground.

You must use isolated analog output modules if a potential difference U_{ISO} can occur between the reference point of the measuring circuit M_{ANA} and chassis ground. By means of an equipotential bonding conductor between the M_{ANA} terminal and chassis ground, make sure that U_{ISO} does not exceed the permitted value.

5.15 Connecting loads/actuators to voltage outputs

Connecting loads to a voltage output

Connecting loads to a voltage output is possible both in a 4-conductor and a 2-conductor connection.

Note

The cables required to connect the analog output module are not drawn in the figures shown below.

In other words, you must continue to read and follow the instructions in the section "Connecting loads/actuators to analog outputs", which contains general information on connecting sensors.

4-conductor connection of loads to a voltage output

You can use the 4-wire technique to achieve a high accuracy at the load by wiring the S- and S+ sensor lines directly to the load. This results in direct measurement and correction of the voltage at the load.

Faults or a voltage drop can result in a potential difference between the sensor lead S- and the reference circuit of the analog circuit M_{ANA}. This potential difference (U_{CM}) must not exceed the permissible value. A negative influence on the accuracy of the analog signal is otherwise inevitable.

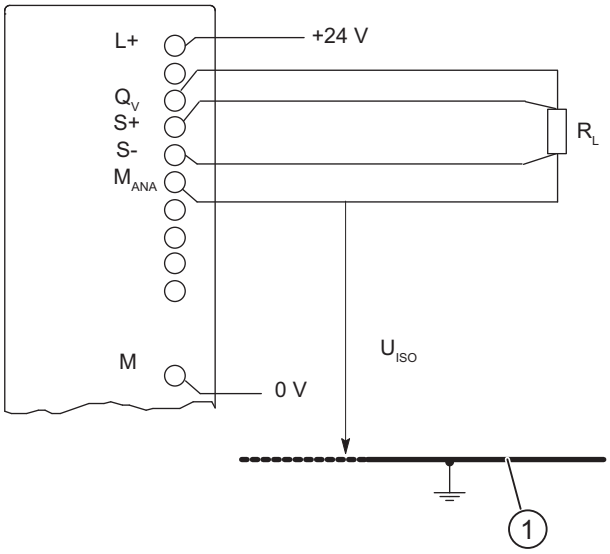

Figure 5-18 4-conductor connection of loads to a voltage output of an electrically isolated analog output module

L +:	Terminal for 24 VDC supply voltage
Q_V:	Analog output voltage
S +:	Sensing line (positive)
S -:	Sensing line (negative)
M_{ANA}:	Reference potential of the analog circuit

M : Ground

U_{ISO}: Potential difference between M_{ANA} and chassis ground

(1) Chassis ground

2-conductor connection of loads to a voltage output

In the case of a 2-conductor connection, connect Q_V with S+ and M_{ANA} with S on the front connector. However, this will not provide the accuracy of a 4-conductor connection.

Wire the loads to the Q_V terminals and to the reference point of measuring circuit M_{ANA}.

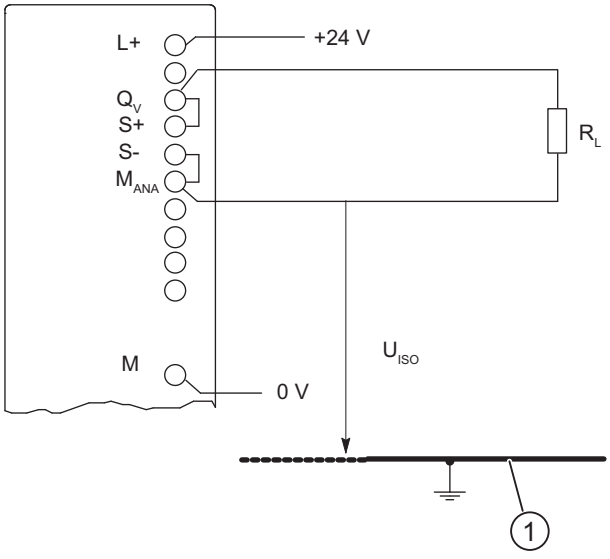

Figure 5-19 2-conductor connection of loads to a voltage output of an electrically isolated analog output module

L +: Terminal for 24 VDC supply voltage

Q_V: Analog output voltage

S +: Sensing line (positive)

S -: Sensing line (negative)

M_{ANA}: Reference potential of the analog circuit

M : Ground

U_{ISO}: Potential difference between M_{ANA} and chassis ground

(1) Chassis ground

See also

Connecting loads/actuators to analog outputs (Page 214)

5.16 Connecting loads/actuators to current outputs

Connecting loads to current outputs

Always connect loads to Q_I and to the reference point of analog circuit M_{ANA} of a current output.

Note

The cables required to connect the analog output module are not drawn in the figure shown below.

In other words, you must continue to read and follow the instructions in the section "Connecting loads/actuators to analog outputs", which contains general information on connecting sensors.

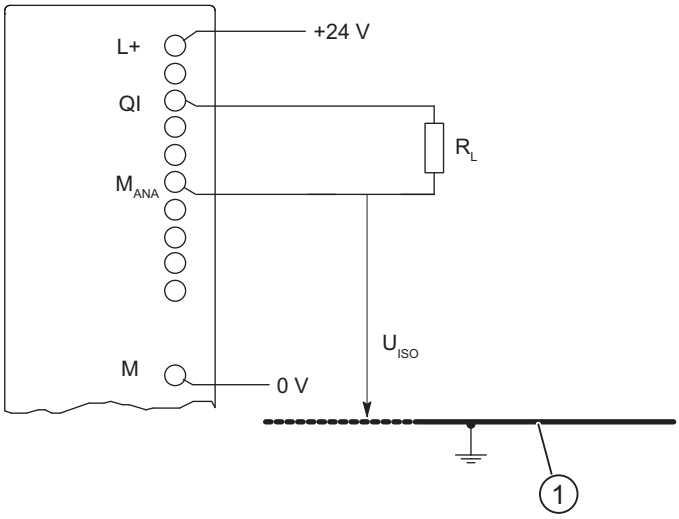

Figure 5-20 Connecting loads to a current output of an isolated AO

L +:	Terminal for 24 VDC supply voltage
Q_I:	Analog output current
M_{ANA}:	Reference potential of the analog circuit
M :	Ground
U_{ISO}:	Potential difference between M_{ANA} and chassis ground
(1)	Chassis ground

See also

Connecting loads/actuators to analog outputs (Page 214)

5.17 Diagnostics functions of analog modules

Programmable and non-programmable diagnostic messages

We distinguish between programmable and non-programmable diagnostic messages.

You only obtain programmable diagnostic messages if you have enabled the diagnostics using the relevant parameters. You perform parameter assignment in the "Diagnostics" tab in *STEP 7*.

The analog module always provides non-programmable diagnostic messages, irrespective of the enable state of diagnostics functions.

Reactions to diagnostic messages in STEP 7

Actions initiated by diagnostic messages:

- The diagnostic message is entered in the diagnostics of the analog module, forwarded to the CPU and can be read out by the user program.
- The error LED on the analog module is lit.
- If you have set "Enable Diagnostic Interrupt" in *STEP 7*, a diagnostic interrupt is triggered and OB 82 is called.

Reading diagnostic messages

You can read detailed diagnostic messages using SFCs in the user program (refer to the appendix "Diagnostic data of signal modules").

You can view the cause of the error in *STEP 7* in the module diagnostics (refer to the *online help for STEP 7*).

Diagnostic message in the measured value of analog input modules

All analog input modules return the measured value $7FFF_H$ as a reaction to errors, irrespective of parameter settings. This measured value indicates either overflow, error, or a disabled channel.

Diagnostics using the INTF and EXTF LEDs

Some analog input modules indicate faults by means of their two fault LEDs INTF (internal fault) and EXTF (external fault). The LEDs go out when all the internal and external faults have been eliminated.

Refer to the specifications of the modules to find out which analog input modules have these fault LEDs.

Diagnostic messages of the analog input modules

The table below gives an overview of the diagnostic messages for the analog input modules with diagnostics capability.

You can find out which diagnostic messages are possible with which modules in the Appendix entitled "Diagnostic Data of the Signal Modules".

Table 5-43 Diagnostic messages of the analog input modules

Diagnostic message	LED	Scope of diagnostics	Programmable
Module error	INTF/EXTF	Module	No
Internal error	INTF	Module	No
External error	EXTF	Module	No
Channel error	INTF/EXTF	Module	No
External auxiliary voltage missing	EXTF	Module	No
Front connector missing	EXTF	Module	No
No module parameters	INTF	Module	No
Incorrect parameters	INTF	Module	No
Channel information available	INTF/EXTF	Module	No
Measuring range module incorrect/missing	INTF	Module	No
Thermocouple connection error	EXTF	Module	No
STOP mode	-	Module	No
EPROM error	INTF	Module	No
RAM error	INTF	Module	No
ADC/DAC error	INTF	Module	No
Hardware interrupt lost	INTF	Module	No
Configuration / programming error	INTF	Channel	No
Short-circuit to M	EXTF	Channel	Yes
Wire break	EXTF	Channel	Yes
Reference channel error	EXTF	Channel	Yes
Underflow	EXTF	Channel	Yes
Overflow	EXTF	Channel	Yes
User connection not wired	EXTF	Channel	No
Open conductor in + direction	EXTF	Channel	No
Open conductor in - direction	EXTF	Channel	No
Run time calibration error	EXTF	Channel	No
Underrange or overrange	EXTF	Channel	No
Open conductor in the current source	EXTF	Channel	No
User calibration does not correspond to the parameter assignment	EXTF	Channel	No

Note

A prerequisite for detecting the errors indicated by programmable diagnostic messages is that you must have assigned parameters to the analog module accordingly in STEP 7.

Causes of errors and remedies for analog input modules

Table 5-44 Diagnostic messages of the analog input modules, causes of errors and remedies

Diagnostic message	Possible cause of error	Remedy
Module error	Any, the module has detected an error.	-
Internal error	Module has detected an error within the automation system.	-
External error	Module has detected an error outside of the automation system.	-
Channel error	Indicates that only certain channels are faulty	-
External auxiliary voltage missing	Load voltage to supply the 2-wire transducer is missing on terminals L+ and M.	Connect supply L+
Front connector missing	Jumper between connections 1 and 2 in the front connector is missing.	Install jumper
No module parameters	Module requires information whether it should operate with default system parameters or with your parameters.	Message present after power on, until the CPU has completed the transfer of parameters; configure the module as required.
Incorrect parameters	A parameter or combination of parameters is incorrect; impermissible measurement range, for example.	Reassign parameters to the module
Channel information available	Channel error; module can provide additional channel information.	-
Measuring range module incorrect/missing	One or more measuring range modules is missing or incorrectly inserted	Insert the measuring range modules on the module according to the parameter assignment of the type of measurement and the measurement range
STOP mode	No parameters have been assigned to the module and the first module cycle has not been completed.	If a reboot of the CPU all the digitized analog values are in the intermediate memory, this message is reset
EPROM error	Module is defective	Replace the module
RAM error		
ADC/DAC error		
Hardware interrupt lost	The module cannot send an interrupt, since the previous interrupt was not acknowledged; possible configuration error.	Change the interrupt handling in the CPU (change priority for interrupt OB; shorten interrupt program).
Configuration / programming error	Illegal parameters transferred to module	Check the measuring range module
		Reassign parameters to the module
Short-circuit to M	A short-circuit to the M potential has occurred on the sensor supply of 2-wire transducers.	Eliminate the short-circuit.
Wire break	Resistance of transducer circuit too high	Use a different type of transducer, or modify the wiring, for example, using a larger conductor cross-section.
	Open circuit between module and sensor	Connect the cable
	Channel not connected (open)	Disable channel ("Measuring type" parameter)
		Wire the channel

Diagnostic message	Possible cause of error	Remedy
Reference channel error	The reference junction connected at channel 0 is faulty due to a wire break, for example.	Check the connections
	The reference temperature value transferred is not within the value range.	Reassign the parameters for the reference temperature
Underflow	Input value below undershoot range; possible cause of error: wrong measuring range selected	Set another measuring range
	With the measuring ranges 4 to 20 mA and 1 to 5 V, if necessary by polarity reversal of sensor connection	Check the connections
Overflow	Input value exceeds overshoot range	Set another measuring range
Run time calibration error	A wiring fault has occurred on a channel during the calibration cycle	Eliminate the wiring fault (fault remains until the next calibration; in other words, a maximum 6 minutes or until there is a STOP-RUN transition of the CPU).

5.18 Interrupts of analog modules

Introduction

This section describes the interrupt reaction of analog modules. There are two types of interrupt:

- Diagnostic interrupt
- Hardware interrupt

Note: certain analog modules do not support interrupts, or can only partially "handle" the interrupts described below. For information on modules supporting interrupt functions, refer to their specifications.

For detailed information on the OBs and SFCs mentioned below, refer to the *STEP 7 Online Help*.

Enabling interrupts

The interrupts are not preset - in other words, they are inhibited without appropriate parameter assignment. Interrupts are enabled in STEP 7.

Special feature: The module is inserted in ER-1/ER-2

Note

If you use the analog module in ER-1/ER-2, you must set the parameters for the input of all the interrupts to "No" because the interrupt lines are not available in ER-1/ER-2.

Diagnostic interrupt

When diagnostic interrupts are enabled, incoming error events (initial occurrence) and outgoing error events (error is cleared) are reported by means of an interrupt.

The CPU interrupts user program execution, and executes diagnostic interrupt OB82.

In the user program, you can call SFC 51 or SFC 59 in OB 82 to obtain more detailed diagnostic information from the module.

The diagnostic information is consistent until such time as OB 82 is exited. When OB 82 is exited, the diagnostic interrupt is acknowledged on the module.

Hardware interrupt with trigger "high and low limit exceeded"

Define a working range by setting a high and low limit. If the process signal (for example, the temperature) leaves this working range, the module triggers a hardware interrupt, provided the interrupt is enabled.

As a result, the CPU interrupts execution of the user program and executes hardware interrupt OB 40.

In the user program of OB 40, you can set how the programmable controller is required to react to a limit value being surpassed or not being reached.

When OB 40 is exited, the hardware interrupt is acknowledged on the module.

Note

Note: the system does not generate a hardware interrupt if your limit setting exceeds the overshoot or undershoot range.

Structure of the start information tag OB40_POINT_ADDR of OB 40

The limit values exceeded by the different channels are entered in the start information of OB 40 in the tag OB40_POINT_ADDR. The figure below shows the assignment of bits in DWORD 8 of local data.

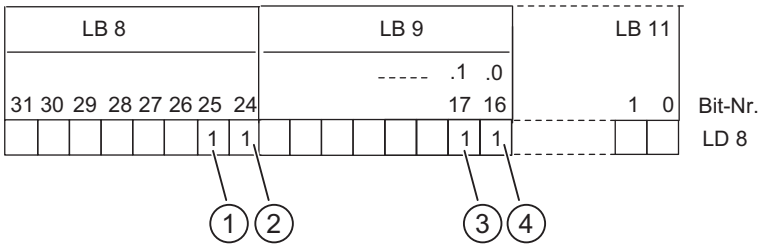

Figure 5-21 Start Information of OB 40: Which event has violated limits and triggered a hardware interrupt

(1) Value exceeds high limit in channel 1

(2) Value exceeds high limit in channel 0

(3) Value exceeds low limit in channel 1

(4) Value exceeds low limit in channel 0

(5) Bit No.

Hardware interrupt triggered by "Reached end of scan cycle"

A hardware interrupt programmed to be triggered at the end of scan cycles allows you to synchronize a process with the scan cycle of the analog input module.

A scan cycle includes the conversion of the measured values of all active channels of the analog input module. The module processes the channels in succession. When all measured values are successfully converted, the module reports the existence of new measurement data at its channels to the CPU by means of an interrupt.

You can always use this interrupt to load the actual, converted analog values.

See also

Features (Page 224)

General information about parameter assignment (Page 196)

5.19 Analog input module SM 431; AI 8 x 13 Bit (6ES7431-1KF00-0AB0)

5.19.1 Features

Overview

The analog input module SM 431; AI 8 x 13 bit has the following features:

- 8 inputs for voltage/current measurement
- 4 inputs for resistance measurement
- Various measuring ranges, adjustable in parallel
- Resolution 13 bits
- Analog section isolated from the CPU
- Maximum permitted common mode voltage between the channels or between the reference potentials of the connected sensors and M_{ANA} 30 V AC

Circuit diagram for SM 431; AI 8 x 13 bit

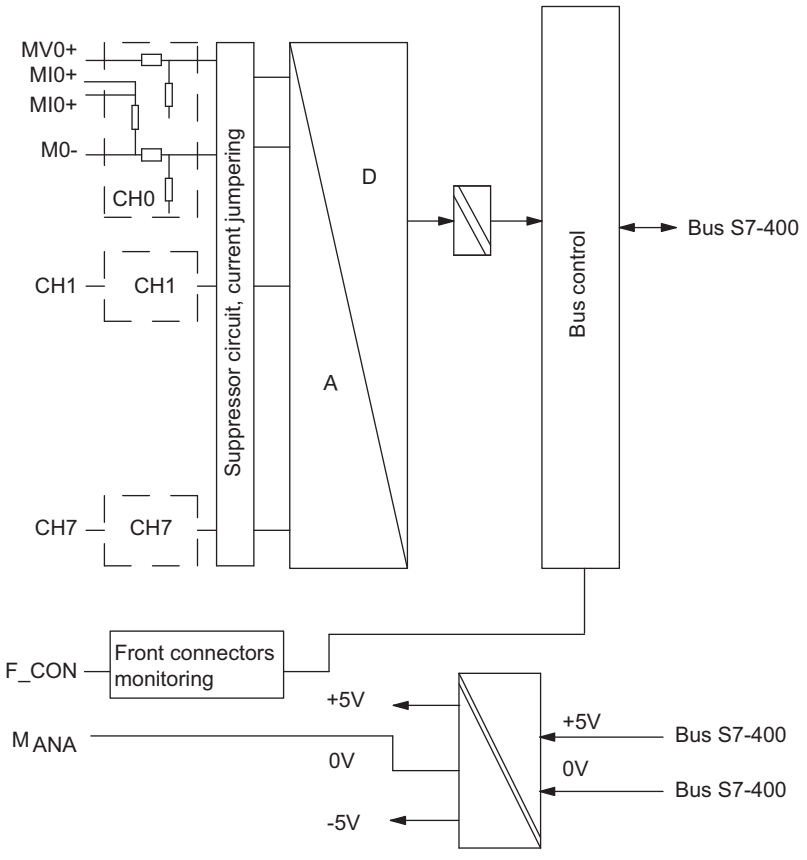

Figure 5-22 Circuit diagram for SM 431; AI 8 x 13 bit

WARNING

The module can get damaged.

The shunt of an input channel can be destroyed if you inadvertently connect a voltage sensor to the M- /MI+ terminals of a channel.

Make sure that the front connector is wired in accordance with the following connection diagram.

Connection diagram for SM 431; AI 8 x 13 bit

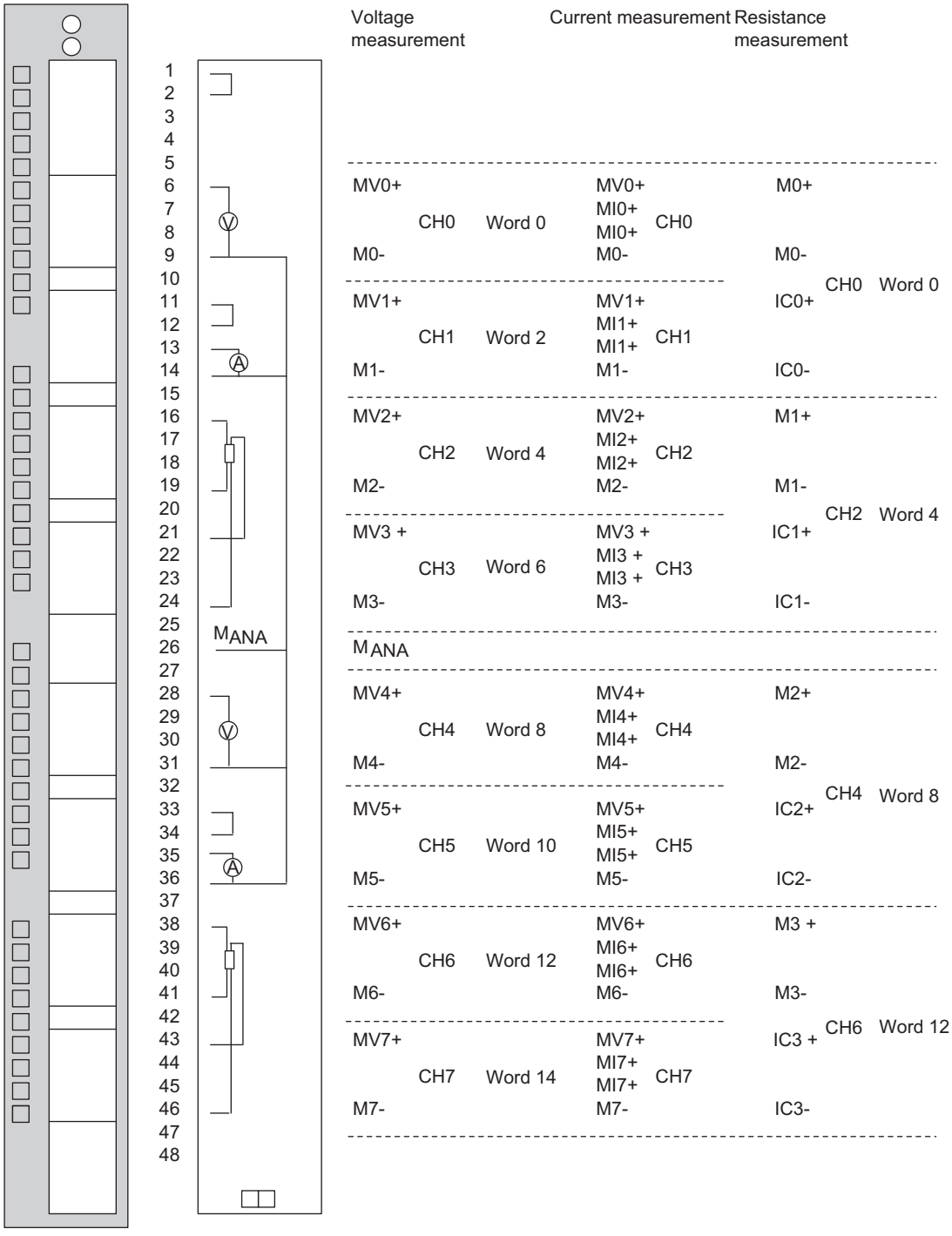

Figure 5-23 Connection diagram for SM 431; AI 8 x 13 bit

Technical specifications for SM 431; AI 8 x 13 bit

Dimensions and weight	
Dimensions W x H x D (mm)	25 x 290 x 210
Weight	ca. 500 g
Module-specific data	
Number of inputs	8
• For resistance-based sensor	4
Cable length	
• shielded	Maximum 200 m
Voltage, current and potential	
Rated load voltage L+	Not required
Constant measured current for resistance-based sensor	Typ. 1.67 mA
Electrical isolation	
• Between channels and backplane bus	Yes
• Between channels	No
Permissible potential difference	
• Between inputs and MANA (UCM)	30 V AC
• Between the inputs (UCM)	30 V AC
• Between MANA and Mintern (UISO)	60 V DC/30 V AC (SELV)
Insulation tested at	
• Between bus and analog section	2120 V DC
• Between bus and chassis ground	500 V DC
• Between analog section and chassis ground	2120 V DC
Current consumption	
• From backplane bus (5 V)	Maximum 350 mA
Module power loss	Typ. 1.8 W
Formation of analog values	
Measuring principle	Integrating
Integration time/conversion time/resolution (per channel)	(Not part of the response time)
• Configurable	Yes
• Interference voltage suppression f1 in Hz	60 / 50
• Integration time in ms	16.7 / 20
• Basic conversion time in ms	23 / 25
• Resolution (including overrange)	13 / 13 bit
Measured value smoothing	Not possible
Basic execution time of the module in ms (all channels enabled)	184 / 200
Noise suppression, error limits	
Interference voltage suppression for f = nx (f1 ±1%), (f1 = interference frequency) n = 1, 2, ...	
• Common mode interference (UCM < 30 V)	> 100 dB

• Series-mode interference (peak value of fault < rated value of input range)	> 40 dB
Crosstalk between the inputs	> 50 dB
Operational limit (throughout temperature range, relative to input range)	
• Voltage input – ± 1 V – ± 10 V – 1 to 5 V	 ± 1.0% ± 0.6% ± 0.7%
• Current input – ± 20 mA – 4 to 20 mA	 ± 1.0% ± 1.0%
• Resistance measurement 0 to 500 Ω; 4-wire measurement (at around 600 Ω)	± 1.25%
Basic error limit (operational limit at 25°C, relative to input range)	
• Voltage input – ± 1 V – ± 10 V – 1 to 5 V	 ± 0.7% ± 0.4% ± 0.5%
• Current input – ± 20 mA – 4 to 20 mA	 ± 0.7% ± 0.7%
• Resistance measurement 0 to 500 Ω; 4-wire measurement (at around 600 Ω)	± 0.8%
Temperature error (relative to input range)	
• in resistance measuring range	± 0.02 % / K
• In all other measuring ranges	± 0.007 % / K
Linearity error (relative to input range)	± 0.05%
Repeat accuracy (in settled state at 25°C, relative to input range)	± 0.1%
Status, interrupts, diagnostics	
Interrupts	None
Diagnostic functions	None
Substitute values can be connected	No
Data for selecting a sensor	
Input range (rated values) / input resistance	
• Voltage	± 1 V / 200 kΩ ± 10 V / 200 kΩ 1 to 5 V / 200 kΩ
• Current	± 20 mA / 80 Ω 4 to 20 mA / 80 Ω
• Resistance	0 to 600 Ω; can be used up to 500 Ω
Permissible input current for current input (destruction limit)	Constant 40 mA
Sensor connection	

• For voltage measurement	Possible
• For current measurement – As 2-wire transducer – As 4-wire transducer	 Possible; with external measuring transducer supply Possible
• For resistance measurement – With 2-wire connection – With 3-wire connection – With 4-wire connection	 Possible; line resistance is also measured Possible

5.19.2 Commissioning the SM 431; AI 8 x 13 Bit

Setting the operating mode

You set the mode of operation of the SM 431; AI 8 x13 Bit in STEP 7.

Parameters

You will find a description of the general procedure for assigning parameters to analog modules in the respective sections.

The table below provides an overview of configurable parameters, including defaults.

Table 5-45 Parameters of the SM 431; AI 8 x 13 Bit

Parameters	Value range		Default[1]	Parameter type	Scope
Measurement					
• Measuring method	Disabled		U		
	U 4DMU 2DMU R-4L	Voltage Current (4-wire sensor) Current (2-wire sensor) Resistance (4-conductor connection)		Static	Channel
• Measuring range	Refer to respective section for the measuring ranges of the input channels that you can set.		± 10 V		
• Interference frequency suppression	60 Hz; 50 Hz		50 Hz		
[1] Only in the CR (central rack) is it possible to start up the analog modules with the default settings.					

See also

General information about parameter assignment (Page 196)

5.19.3 Measuring methods and measuring ranges of SM 431; AI 8 x 13 Bit

Measuring methods

You can set the measuring method at the input channels:

- Voltage measurement
- Current measurement
- Resistance measurement

You perform the setting with the "measuring method" parameter in STEP 7.

Circuit for resistance measurement

The following conditions apply when measuring the resistance with the SM 431; AI 8 x 13 Bit:

Table 5-46 Channels for resistance measurement of the SM 431; AI 8 x 13 Bit

Measuring type parameter	Permissible for channel n	Condition
Resistance (4-conductor connection)	0, 2, 4 or 6	You must disable the "Measuring type" parameter for channels n+1 (1, 3, 5, 7). Reason: The connections of channel n+1 are used to supply the resistance that is connected to channel n.

Unused channels

Unused channels can be left open. You can improve the noise immunity of the module in a measuring environment with serious interference by short-circuiting the channels and connecting to M_{ANA}. For unused channels, set the "measuring method" parameter to "deactivated". This reduces the module's cycle time.

Measuring ranges

Set the measuring ranges at the "measuring range" parameter in *STEP 7*.

Table 5-47 Measuring ranges of the SM 431; AI 8 x 13 Bit

Selected measuring method	Measuring range	Description
V: Voltage	±1 V 1 V to 5 V ±10 V	The digitized analog values are listed in the section "Representation of analog values for output channels" in the voltage measuring range.
2DMU: Current (2-wire transducer)	4 to 20 mA	The digitized analog values are listed in the section "Representation of analog values for output channels in the current measuring range".

Selected measuring method	Measuring range	Description
4DMU: Current (4-wire transducer)	4 to 20 mA ± 20 mA	The digitized analog values are listed in the section "Representation of analog values for output channels in the current measuring range".
R-4L: Resistance (4-conductor connection)	600 Ω	The digitized analog values are listed in the section "Representation of analog values for output channels in the resistance-type sensor range".

Default

The "voltage" measuring method and "± 10 V" measuring range are set by default at the module. You can use this combination of measuring method and measuring range without configuring the SM 431; AI 8 x 13 Bit in *STEP 7*.

5.20 Analog input module SM 431; AI 8 x 14 Bit (6ES7431-1KF10-0AB0)

5.20.1 Features

Overview

The analog input module SM 431; AI 8 x 14 bit has the following features:

- 8 inputs for current and voltage measurement
- 4 inputs for resistance and temperature measurement
- Various measuring ranges, adjustable in parallel
- Resolution 14 bits
- Particularly suited to temperature measurement
- Temperature sensor types configurable
- Linearization of sensor characteristic curves
- Supply voltage: 24 V DC only required for connection of 2-wire transducers
- Analog section isolated from the CPU
- Maximum permitted common mode voltage between channels or between channel and central grounding point 120 V AC

Note

"Wire break" diagnostics

The diagnosis "wire break" can be configured for "voltage" measurement for this module, but is not evaluated by the module in that measurement type.

Circuit diagram for SM 431; AI 8 x 14 bit

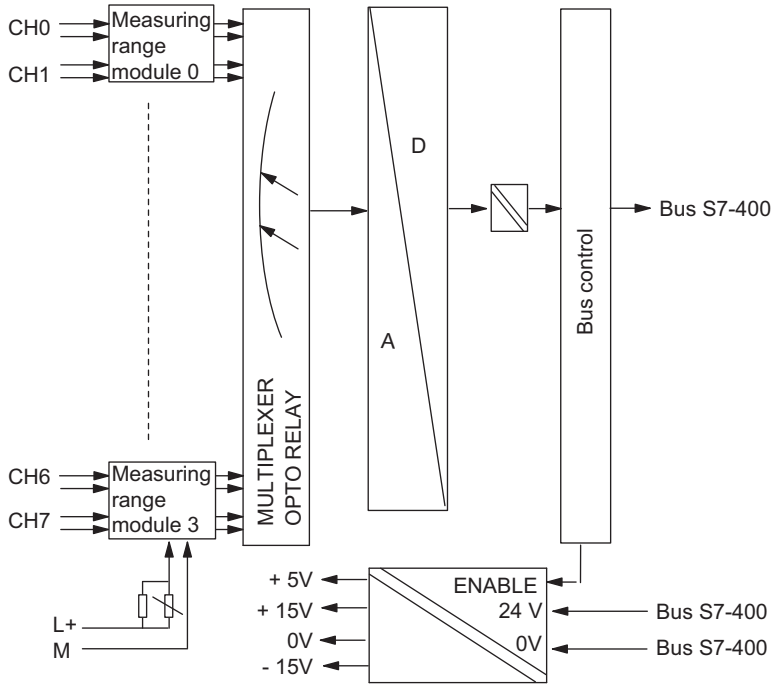

Figure 5-24 Circuit diagram for SM 431; AI 8 x 14 bit

Connection diagram for SM 431; AI 8 x 14 bit

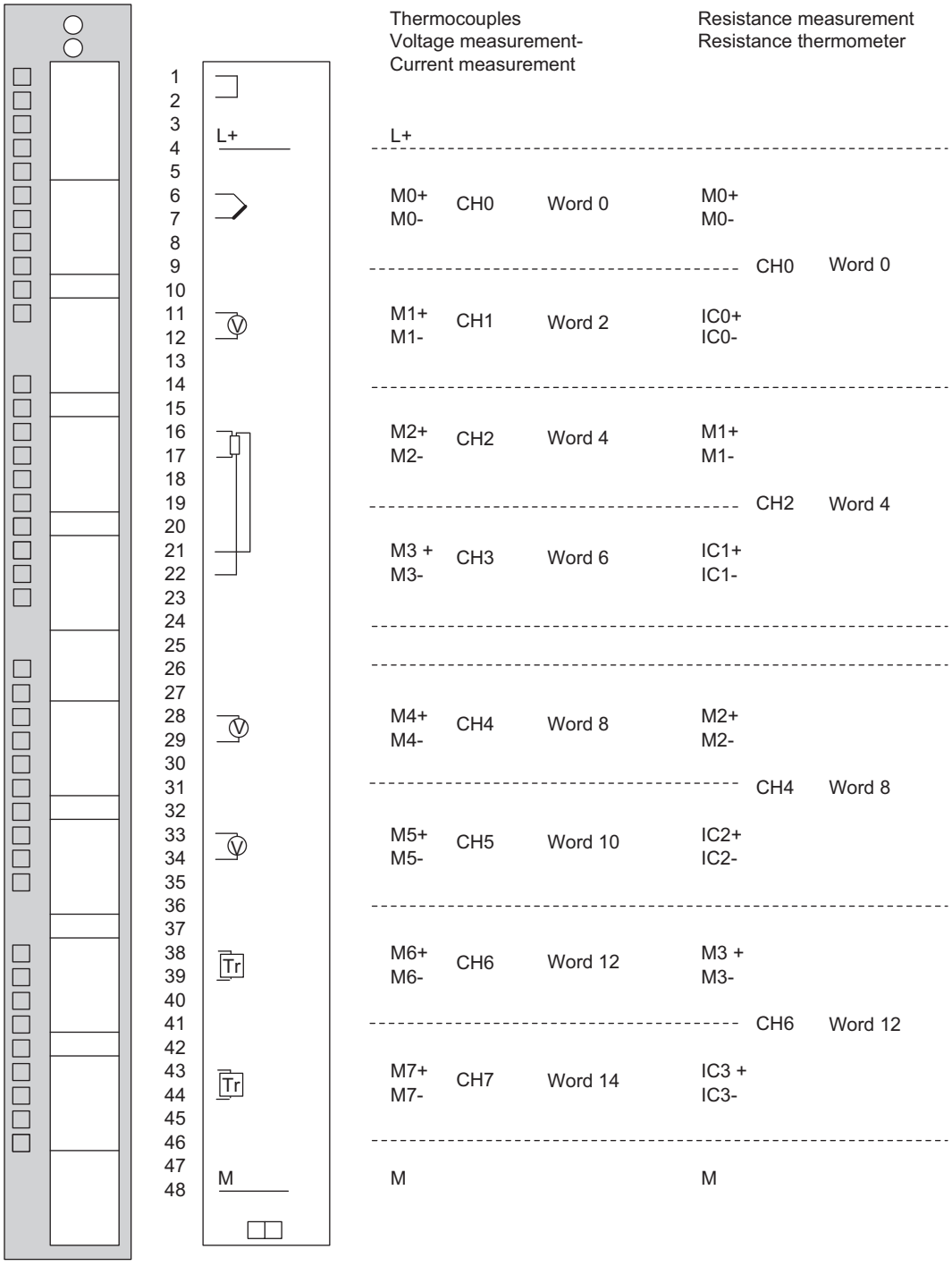

Figure 5-25 Connection diagram for SM 431; AI 8 x 14 bit

Technical specifications for SM 431; AI 8 x 14 bit

Dimensions and weight	
Dimensions W x H x D (mm)	25 x 290 x 210
Weight	ca. 500 g
Module-specific data	
Number of inputs	8
• For resistance-based sensor	4
Cable length	
• Shielded	Maximum 200 m
• In 80 mV - input range and for thermocouples	Maximum 50 m
Voltage, current and potential	
Rated load voltage L+	24 V DC (only required for supply of 2-wire transducers)
• Reverse polarity protection	Yes
Supply voltage of the measuring transducers	
• Supply current	Maximum 50 mA
• Short-circuit proof	Yes
Constant measured current for resistance-based sensor	Typ. 1.67 mA
Electrical isolation	
• Between channels and backplane bus	Yes
• Between channels	No
• Between channels and load voltage L+	Yes
Permissible potential difference	
• Between inputs and MANA (UCM)	60 V DC/30 V AC (SELV)
• Between the inputs (UCM)	60 V DC/30 V AC (SELV)
• Between MANA and Mintern (UISO)	60 V DC/30 V AC (SELV)
Insulation tested at	
• Between bus and L+/M	2120 V DC
• Between bus and analog section	2120 V DC
• Between bus and chassis ground	500 V DC
• Between analog section and L+/M	500 V DC
• Between analog section and chassis ground	2120 V DC
• Between L+/M and chassis ground	2120 V DC
Current consumption	
• From backplane bus (5 V)	Maximum 600 mA
• From load voltage L+	Maximum 200 mA (with 8 connected fully controlled 2-wire transducers)
Module power loss	Typ. 3.5 W
Formation of analog values	
Measuring principle	Integrating
Integration time/conversion time/resolution (per channel)	(Not part of the response time)

• Configurable	Yes
• Interference voltage suppression f1 in Hz	60 / 50
• Integration time in ms	16.7 / 20
• Basic conversion time in ms	20.1 / 23.5
• Additional conversion time for resistance measurement in ms	40.2 / 47
• Additional conversion time for wire-break monitoring in ms	4.3 / 4.3
• Additional conversion time for resistance measurement in ms	5.5 / 5.5
• Resolution (including overrange)	14 / 14 bit
• When smoothing is enabled	16 / 16 bit
Measured value smoothing	Configurable in 4 stages
Basic execution time of the module in ms (all channels enabled)	161 / 188
Noise suppression, error limits	
Interference voltage suppression for f = nx (f1 ±1%), (f1 = interference frequency) n = 1, 2, ...	
• Common mode interference (UCM < 120 Vss)	> 100 dB
• Series-mode interference (peak value of fault < rated value of input range)	> 40 dB
Crosstalk between the inputs	> 70 dB
Operational limit (throughout temperature range, relative to input range)	
• Voltage input – ± 80 mV – ± 250 mV – ± 500 mV – ± 1 V – ± 2.5 V – ± 5 V – 1 to 5 V – ± 10 V	 ± 0.38% ± 0.35% ± 0.35% ± 0.35% ± 0.35% ± 0.35% ± 0.35% ± 0.35%
• Current input – 0 to 20 mA – ± 20 mA – 4 to 20 mA	 ± 0.35% ± 0.35% ± 0.35%

• Resistance measurement	
– 0 to 48 Ω; 4-wire measurement	± 0.35%
– 0 to 150 Ω; 4-wire measurement	± 0.35%
– 0 to 300 Ω; 4-wire measurement	± 0.35%
– 0 to 600 Ω; 4-wire measurement	± 0.35%
– 0 to 5000 Ω; 4-wire measurement (around 6000 Ω)	± 0.35%
– 0 to 300 Ω; 3-wire measurement	± 0.5%
– 0 to 600 Ω; 3-wire measurement	± 0.5%
– 0 to 5000 Ω; 3-wire measurement (around 6000 Ω)	± 0.5%
• Thermocouples	
– TC type B	± 14.8 K
– TC type R	± 9.4 K
– TC type s	± 10.6 K
– TC type T	± 2.2 K
– TC type E	± 4.0 K
– TC type J	± 5.2 K
– TC type K	± 7.6 K
– TC type U	± 3.5 K
– TC type L	± 5.1 K
– TC type N	± 5.5 K
• Resistance thermocouples 4-conductor standard measuring range	
– Pt 100	± 4.6 K
– Pt 200	± 5.7 K
– Pt 500	± 4.6 K
– Pt 1000	± 3.7 K
– Ni 100	± 0.9 K
– Ni 1000	± 0.9 K
Climatic measuring range	
– Pt 100	± 0.5 K
– Pt 200	± 0.5 K
– Pt 500	± 0.5 K
– Pt 1000	± 0.5 K
– Ni 100	± 0.9 K
– Ni 1000	± 0.9 K

• Resistance thermocouples 3-conductor standard measuring range	
– Pt 100	± 5.2 K
– Pt 200	± 8.2 K
– Pt 500	± 6.5 K
– Pt 1000	± 5.2 K
– Ni 100	± 1.3 K
– Ni 1000	± 1.3 K
Climatic measuring range	
– Pt 100	± 0.7 K
– Pt 200	± 0.7 K
– Pt 500	± 0.7 K
– Pt 1000	± 0.7 K
– Ni 100	± 1.3 K
– Ni 1000	± 1.3 K
Basic error limit (operational limit at 25°C, relative to input range)	
• Voltage input	
– ± 80 mV	± 0.17%
– ± 250 mV	± 0.15%
– ± 500 mV	± 0.15%
– ± 1 V	± 0.15%
– ± 2.5 V	± 0.15%
– ± 5 V	± 0.15%
– 1 to 5 V	± 0.15%
– ± 10 V	± 0.15%
• Current input	
– 0 to 20 mA	± 0.15%
– ± 20 mA	± 0.15%
– 4 to 20 mA	± 0.15%
• Resistance measurement	
– 0 to 48 Ω; 4-wire measurement	± 0.15%
– 0 to 150 Ω; 4-wire measurement	± 0.15%
– 0 to 300 Ω; 4-wire measurement	± 0.15%
– 0 to 600 Ω; 4-wire measurement	± 0.15%
– 0 to 5000 Ω; 4-wire measurement (around 6000 Ω)	± 0.15%
– 0 to 300 Ω; 3-wire measurement	± 0.3%
– 0 to 600 Ω; 3-wire measurement	± 0.3%
– 0 to 5000 Ω; 3-wire measurement (around 6000 Ω)	± 0.3%

• Thermocouples	
– TC type B	± 8.2 K
– TC type R	± 5.2 K
– TC type s	± 5.9 K
– TC type T	± 1.2 K
– TC type E	± 1.8 K
– TC type J	± 2.3 K
– TC type K	± 3.4 K
– TC type U	± 1.8 K
– TC type L	± 2.3 K
– TC type N	± 2.9 K
• Resistance thermocouples 4-conductor standard measuring range	
– Pt 100	± 2.0 K
– Pt 200	± 2.5 K
– Pt 500	± 2.0 K
– Pt 1000	± 1.6 K
– Ni 100	± 0.4 K
– Ni 1000	± 0.4 K
Climatic measuring range	
– Pt 100	± 0.2 K
– Pt 200	± 0.2 K
– Pt 500	± 0.2 K
– Pt 1000	± 0.2 K
– Ni 100	± 0.4 K
– Ni 1000	± 0.4 K
• Resistance thermocouples 3-conductor standard measuring range	
– Pt 100	± 3.1 K
– Pt 200	± 4.9 K
– Pt 500	± 3.9 K
– Pt 1000	± 3.1 K
– Ni 100	± 0.8 K
– Ni 1000	± 0.8 K
Climatic measuring range	
– Pt 100	± 0.4 K
– Pt 200	± 0.4 K
– Pt 500	± 0.4 K
– Pt 1000	± 0.4 K
– Ni 100	± 0.8 K
– Ni 1000	± 0.8 K
Temperature error (relative to input range)	± 0.004 % / K
Linearity error (relative to input range)	± 0.01%

Repeat accuracy (in settled state at 25°C, relative to input range)	± 0.1%
Status, interrupts, diagnostics	
Interrupts	None
Diagnostic functions	None
Substitute values can be connected	No
Data for selecting a sensor	
Input ranges (rated values)/input resistance	
• Voltage	± 80 mV / 1 MΩ ± 250 mV / 1 MΩ ± 500 mV / 1 MΩ ± 1 V / 1 MΩ ± 2.5 V / 1 MΩ ± 5 V / 1 MΩ 1 to 5 V / 1 MΩ ± 10 V / 1 MΩ
• Current	0 to 20 mA / 50 Ω ± 20 mA / 50 Ω 4 to 20 mA / 50 Ω
• Resistance	0 to 48 Ω / 1 MΩ 0 to 150 Ω / 1 MΩ 0 to 300 Ω / 1 MΩ 0 to 600 Ω / 1 MΩ 0 to 6000 Ω / 1 MΩ (can be used up to 5000 Ω)
• Thermocouples	TC type B / 1 MΩ TC type R / 1 MΩ TC type S / 1 MΩ TC type T / 1 MΩ TC type E / 1 MΩ TC type J / 1 MΩ TC type K / 1 MΩ TC type U / 1 MΩ TC type L / 1 MΩ TC type N / 1 MΩ
• Resistance thermometer	Pt 100 / 1 MΩ Pt 200 / 1 MΩ Pt 500 / 1 MΩ Pt 1000 / 1 MΩ Ni 100 / 1 MΩ Ni 1000 / 1 MΩ
Permissible input voltage for voltage input (destruction limit)	Maximum 18 V continuous 75 V for 1 ms (cycle clock ratio 1 : 20)
Permissible input current for current input (destruction limit)	40 mA continuous

Sensor connection	
• For voltage measurement	Possible
• For current measurement – As 2-wire transducer – As 4-wire transducer	 Possible Possible
• For resistance measurement – With 2-wire connection – With 3-wire connection – With 4-wire connection	 Possible; line resistance is also measured Possible Possible
• Load of 2-wire transducer	Maximum 750 Ω
Characteristic curve linearization	Configurable
• For thermocouples	Type B, R, S, T, E, J, K, U, L, N
• For resistance thermometers	Pt 100, Pt 200, Pt 500, Pt 1000, Ni 100, Ni 1000
Temperature compensation	Yes, configurable
• Internal temperature compensation	No
• External temperature compensation with compensating box	Possible
• External temperature compensation with Pt 100	Possible
• Compensation for definable reference junction temperature	Possible
Technical unit for temperature measurement	Degrees Celsius

5.20.2 Commissioning the SM 431; AI 8 x 14 Bit

Setting the operating mode

You set the mode of operation of the SM 431; AI 8 x 14 Bit by means of measuring range modules on the module and in *STEP 7*.

Measuring range modules

A measuring range module of the module matches two channels and one resistance channel to each type of sensor. Reposition the measuring range modules to suit the measuring method and range. The steps you have to perform to do this are described in detail in the respective section.

For an overview of the settings of specific measuring methods and ranges, refer to the corresponding table in the section "Measuring methods and measuring ranges of SM 431; AI 8 x 14 Bit". The necessary settings are also shown on the label attached to the module.

Parameters

You will find a description of the general procedure for assigning parameters to analog modules in the respective sections.

The table below provides an overview of configurable parameters, including defaults.

Table 5-48 Parameters of the SM 431; AI 8 x 14 Bit

Parameters	Value range	Default setting[1]	Parameter type	Scope
Diagnostics				
• Wire break	Yes/no	No	Static	Channel
Measurement				

Parameters	Value range		Default setting[1]	Parameter type	Scope
• Measuring method	Deactivated U	Voltage	U	Static	Channel
	4DMU	Current (4-wire sensor)			
	2DMU	Current (2-wire sensor)			
	R-4L	Resistance (4-conductor connection)			
	R-3L	Resistance (3-conductor connection)			
	RTD-4L	Thermal resistor (linear, 4-conductor connection)			
	RTD-3L	Thermal resistor (linear, 3-conductor connection)			
	TC-L	Thermocouple (linear)			
• Measuring range	For information on configurable measuring ranges of input channels, refer to the chapter "Measuring methods and measuring ranges of SM 431; AI 8 x 14 Bit".		± 10 V		
• Reference temperature	- 273.15 to 327.67 °C		0,00 °C	Dynamic	Module
• Interference frequency suppression	60 Hz; 50 Hz		50 Hz	Static	Channel
• Smoothing	None Weak Medium Strong		None	Static	Channel
• Reference junction	None RTD on Channel 0 Reference temperature value dynamic		None		

[1] Only in the CR (central rack) is it possible to start up the analog modules with the default settings.

Measured value smoothing

You will find information that is generally applicable to the smoothing of analog values in the respective section.

The following figure shows for the module the number of module cycles, in the case of a step response, after which the smoothed analog value is applied to almost 100%, depending on the smoothing setting. The figure applies to every change of signal at an analog input.

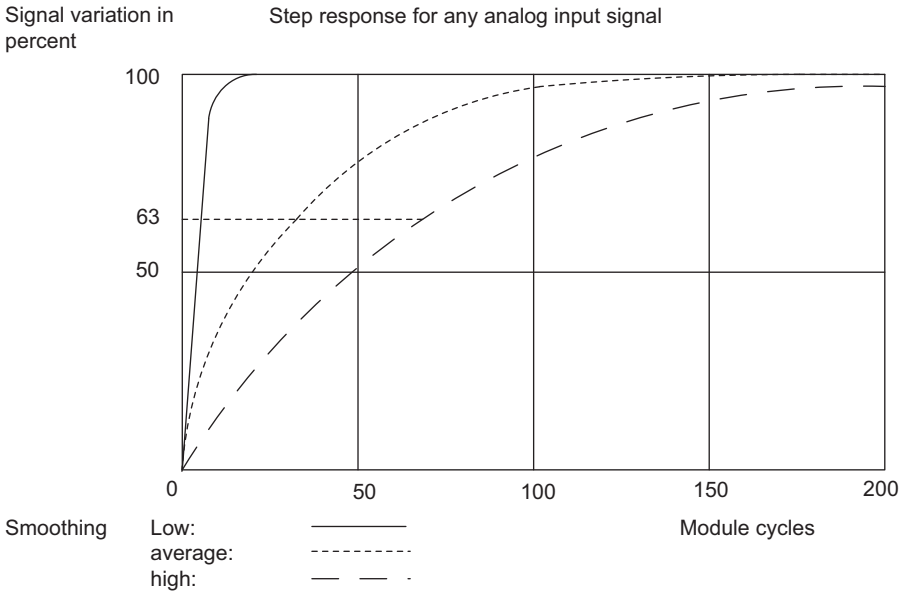

Figure 5-26 Step response of the SM 431; AI 8 x 14 Bit

See also

General information about parameter assignment (Page 196)

Conversion, cycle, settling and response time of analog modules (Page 193)

5.20.3 Measuring methods and measuring ranges of SM 431; AI 8 x 14 Bit

Measuring methods

You can set the measuring method at the input channels:

- Voltage measurement
- Current measurement
- Resistance measurement
- Temperature measurement

You specify the setting by means of the measuring range modules on the module and the "Measuring type" parameter in STEP 7.

Circuit variants for the channels

Two channels are set in each case with the measuring range module. There are therefore restrictions as regards the measuring method for the adjacent channels 0/1, 2/3, 4/5 and 6/7, as shown in the following table:

Table 5-49 Selection of the measuring method for channel n and channel n+1 of the SM 431; AI 8 x 14 Bit (6ES7431-1KF10-0AB0)

Measuring method, channel n	**Measuring method, channel n + 1**								
	Deacti-vated	Voltage	Current 4-DMU	Current 2-DMU	R-4L	R-3L	RTD-4L	RTD-3L	TC-L
Disabled	x	x	x	x					x
Voltage	x	x							x
Current 4-wire trans-ducer	x		x						
Current 2-wire trans-ducer	x			x					
4-wire resistor	x								
3-wire resistor	x								
Four-wire thermal re-sistor	x								
3-wire thermal resistor	x								
Thermocouples	x	x							x

Example

If you select "current (2-wire transducer)" for channel 6, you can only disable the measuring method or set "current (2-wire transducer)" for channel 7.

Circuit for resistance measurement

The following conditions apply when measuring the resistance and temperature with the SM 431; AI 8 x 14 Bit:

Table 5-50 Channels for resistance and temperature measurement of the SM 431; AI 8 x 14 Bit

Measuring type parameter	Permissible for channel n	Condition
Resistance (4-conductor connection)	0, 2, 4 or 6	You must disable the "Measuring type" parameter for channels n+1 (1, 3, 5, 7). Reason: The connections of channel n+1 are used to supply the resistance that is connected to channel n.
Resistance (3-conductor connection)	0, 2, 4 or 6	
Thermal resistance (linear, 4-wire connection)	0, 2, 4 or 6	
Thermal resistance (linear, 3-wire connection)	0, 2, 4 or 6	

Circuit for reference junction compensation for thermocouples

If you select "RTD on Channel 0" as a reference junction for reference junction compensation for thermocouples, the following applies:

Table 5-51 Thermocouple with reference junction compensation via RTD on channel 0

Measuring type parameter	Permissible for channel n	Condition
RTD on Channel 0	2 to 7	You must connect and configure on channel 0 a resistance thermometer with linearization, a 3 or 4-conductor connection in climatic range. This means that channels 0 and 1 are assigned. Reason: If channel 0 is to be used as the reference junction, a resistance-type sensor must be connected there to record absolute temperatures in the climatic range.

Unused channels

Unused channels can usually be left open. Set the measuring range modules to position "A". In measuring environments with strong interference, you can improve the module's immunity to interference by short-circuiting the channels.

For unused channels, set the "measuring method" parameter to "deactivated". This reduces the module's cycle time.

Measuring ranges

Set the measuring ranges using the measuring range modules, and at the "measuring method" parameter in *STEP 7*.

Table 5-52 Measuring ranges of the SM 431; AI 8 x 14 Bit (6ES7431-1KF10-0AB0)

Selected measuring method	Measuring range (type of sensor)	Measuring range module settings	Description
V: Voltage	± 80 mV ± 250 mV ± 500 mV ± 1 V ± 2.5 V ± 5 V 1 to 5 V ± 10 V	A	The digitized analog values are listed in the section "Representation of analog values for analog input channels" in the voltage measuring range.
2DMU: Current (2-wire transducer)	4 to 20 mA	D	To supply these transducers with current you must connect 24 V to the L+ and M front connector terminals. The digitized analog values are listed in the section "Representation of analog values for analog input channels" in the current measuring range.
4DMU: Current (4-wire transducer)	0 mA to 20 mA 4 mA to 20 mA ± 20 mA	C	The digitized analog values are listed in the section "Representation of analog values for analog input channels" in the current measuring range.
R-4L: Resistance (4-conductor connection)	48 Ω 150 Ω 300 Ω 600 Ω 6000 Ω	A	The digitized analog values are listed in the section "Representation of analog values for analog input channels" in the resistance measuring range.
R-3L: Resistance (3-conductor connection)	300 Ω 600 Ω 6000 Ω		

Selected measuring method	Measuring range (type of sensor)	Measuring range module settings	Description
TCL: Thermocouple (linear) (temperature measurement)	Type B Type N Type E Type R Type S Type J Type L Type T Type K Type U	A	The digitized analog values are listed in the section "Representation of analog values for analog input channels" in the temperature range.
RTD-4L: Thermal resistance (linear, 4-wire connection) (temperature measurement)	Pt 100 Climatic Pt 200 Climatic Pt 500 Climatic Pt 1000 Climatic Ni 100 Climatic Ni 1000 Climatic Pt 100 Standard Pt 200 Standard Pt 500 Standard Pt 1000 Standard Ni 100 Standard Ni 1000 Standard	A	
RTD-3L: Thermal resistance (linear, 3-wire connection) (temperature measurement)			

Defaults

The module has the following default settings in *STEP 7*:

- Channels 0 to 7: "Voltage" measuring method ; "± 10 V" measuring range

You can use these measuring methods and measuring ranges without configuring the SM 431; AI 8 x 14 Bit in STEP 7.

5.21 Analog input module SM 431; AI 8 x 14 Bit (6ES7431-1KF20-0AB0)

5.21.1 Features

Overview

SM 431; AI 8 x 14 bit has the following features:

- Rapid A/D change, therefore highly suited to highly dynamic processes
- 8 inputs for voltage/current measurement
- 4 inputs for resistance measurement
- Various measuring ranges, adjustable in parallel

- Resolution 14 bits
- Supply voltage: 24 V DC only required for connection of 2-wire transducers
- Analog section isolated from the CPU
- Maximum permitted common mode voltage between the channels or between the reference potentials of the connected sensors and M_{ANA} 8 V AC

Circuit diagram for SM 431; AI 8 x 14 bit

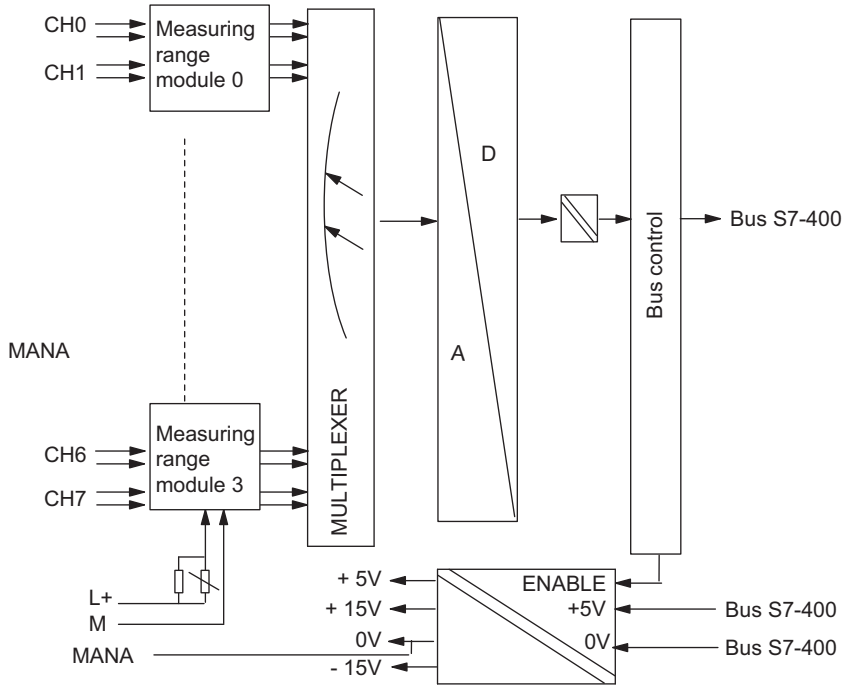

Figure 5-27 Circuit diagram for SM 431; AI 8 x 14 bit

Connection diagram for SM 431; AI 8 x 14 bit

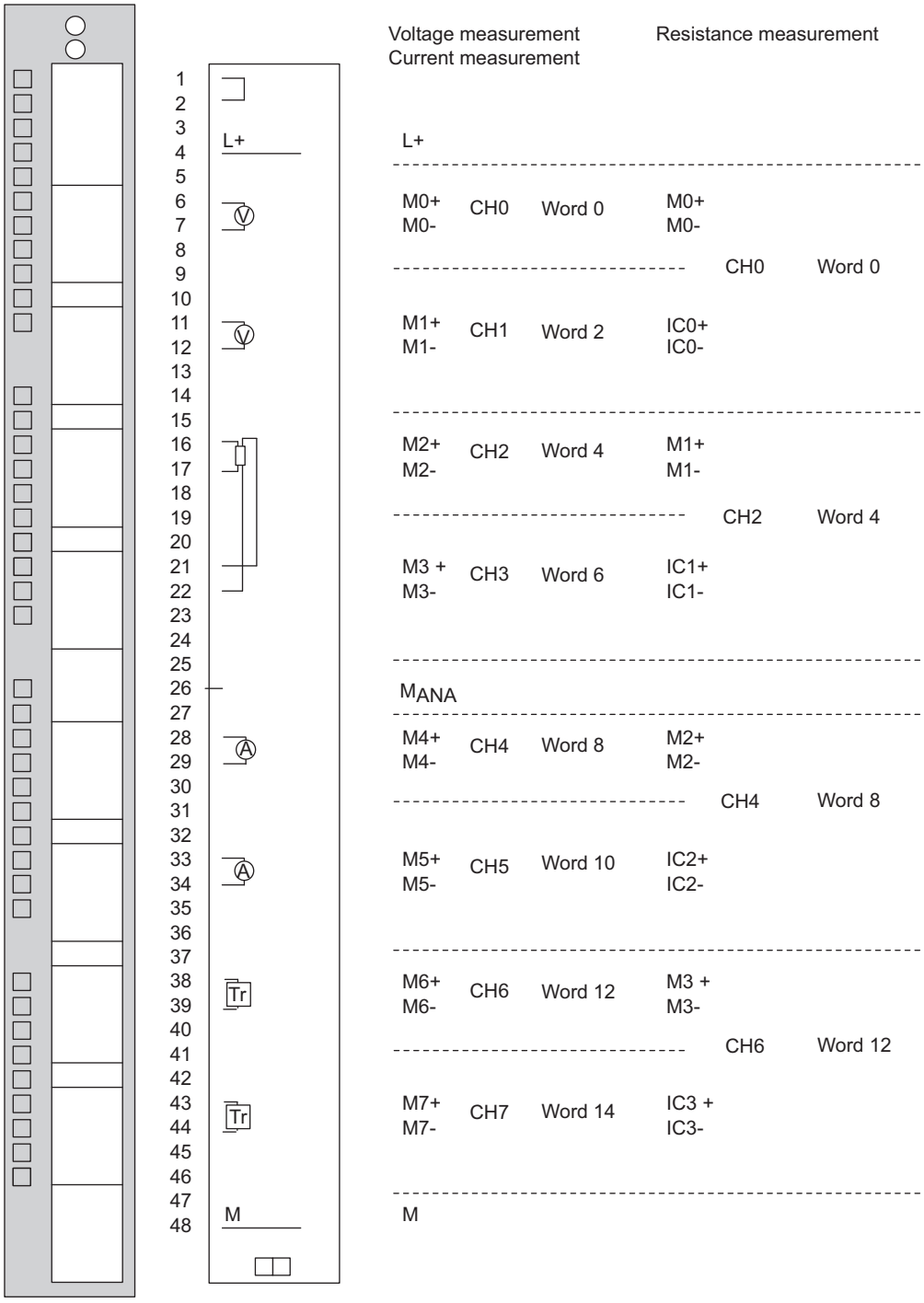

Figure 5-28 Connection diagram for SM 431; AI 8 x 14 bit

Technical specifications for SM 431; AI 8 x 14 bit

Dimensions and weight	
Dimensions W x H x D (mm)	25 x 290 x 210
Weight	ca. 500 g
Module-specific data	
Number of inputs • For resistance-based sensor	8 4
Cable length • Shielded	 Maximum 200 m
Voltage, current and potential	
Rated load voltage L+	24 V DC (only required for supply of 2-wire transducers)
• Reverse polarity protection	Yes
Supply voltage of the measuring transducers	
• Supply current	Maximum 50 mA
• Short-circuit proof	Yes
Constant measured current for resistance-based sensor	Typ. 1.67 mA
Electrical isolation	
• Between channels and backplane bus	Yes
• Between channels	No
• Between the channels and load voltage L+	Yes
Permissible potential difference • Between inputs and MANA (UCM)	 8 V AC
• Between the inputs (UCM)	8 V AC
• Between MANA and Mintern (UISO)	60 V DC/30 V AC (SELV)
Insulation tested at	
• Between bus and analog section	2120 V DC
• Between bus and chassis ground	500 V DC
• Between analog section and L+/M	500 V DC
• Between analog section and chassis ground	2120 V DC
• Between L+/M and chassis ground	2120 V DC
Current consumption • From backplane bus (5 V)	 Maximum 1000 mA
• From load voltage L+	Maximum 200 mA (with 8 connected fully controlled 2-wire transducers)
Module power loss	Typ. 4.9 W
Formation of analog values	
Measuring principle	Instantaneous value conversion
Integration time/conversion time/resolution (per channel)	(Not part of the response time)
• Configurable	Yes
• Interference voltage suppression f1 in Hz	None / 400 / 60 / 50

• Basic conversion time	52 µs
• Resolution (including overrange)	14 / 14 / 14
Measured value smoothing	"None - strong" configurable
Time constant of the input filter	15 µs
Basic execution time of the module in ms (all channels enabled)	0.420
Noise suppression, error limits	
Interference voltage suppression for f = nx (f1 ±1%), (f1 = interference frequency) n = 1, 2 , ... Filter 400 / 60 / 50 Hz configured	
• Common mode interference (UCM < 11 Vss)	> 80 dB
• Series-mode interference (peak value of fault < rated value of input range)	> 40 dB
Crosstalk between the inputs	> 70 dB
Operational limit (throughout temperature range, relative to input range)	
• Voltage input – ± 1 V – ± 10 V – 1 to 5 V	 ± 0.7% ± 0.9% ± 0.9%
• Current input – ± 20 mA – 4 to 20 mA	 ± 0.8% ± 0.8%
• Resistance measurement – 0 to 600 Ω;	 ± 1.0%
Basic error limit (operational limit at 25°C, relative to input range)	
• Voltage input – ± 1 V – ± 10 V – 1 to 5 V	 ± 0.6% ± 0.75% ± 0.75%
• Current input – ± 20 mA – 4 to 20 mA	 ± 0.7% ± 0.7%
• Resistance measurement – 0 to 600 Ω;	 ± 0.7%
Temperature error (relative to input range)	± 0.03% / K
Linearity error (relative to input range)	± 0.05%
Repeat accuracy (in settled state at 25°C, relative to input range)	± 0.2%
Status, interrupts, diagnostics	
Interrupts	None
Diagnostic functions	None
Substitute values can be connected	No
Data for selecting a sensor	
Input ranges (rated values)/input resistance	

• Voltage	± 1 V / 100 kΩ ± 10 V / 100 kΩ 1 to 5 V / 100 kΩ
• Current	± 20 mA / 50 Ω 4 to 20 mA / 50 Ω
• Resistance	0 to 600 Ω / 10 MΩ
Permissible input voltage for voltage input (destruction limit)	Maximum 18 V continuous; 75 V for 1 ms (cycle clock ratio 1 : 20)
Permissible input current for current input (destruction limit)	40 mA continuous
Sensor connection	
• For voltage measurement	Possible
• For current measurement – As 2-wire transducer – As 4-wire transducer	 Possible Possible
• For resistance measurement – With 2-wire connection – With 3-wire connection – With 4-wire connection	 Possible; line resistance is also measured Possible
• Load of 2-wire transducer	Maximum 750 Ω

5.21.2 Commissioning the SM 431; AI 8 x 14 Bit

Introduction

You set the mode of operation of the SM 431; AI 8 x 14 Bit by means of measuring range modules on the module and in *STEP 7*.

Measuring range modules

A measuring range module of the module matches two channels and one resistance channel to each type of sensor. Reposition the measuring range modules to suit the measuring method and range. The steps you have to perform to do this are described in detail in the respective section.

For an overview of the settings of specific measuring methods and ranges, refer to the corresponding table in the section "Measuring methods and measuring ranges of SM 431, AI 8 x 14 Bit". The necessary settings are also shown on the label attached to the module.

Parameters

You will find a description of the general procedure for assigning parameters to analog modules in the respective sections.

The table below provides an overview of configurable parameters, including defaults.

Table 5-53 Parameters of the SM 431; AI 8 x 14 Bit (6ES7431-1KF20-0AB0)

Parameters	Value range		Default[1]	Parameter type	Scope
Measurement					
• Measuring method	Disabled		U	Static	Channel
	U	Voltage			
	4DMU	Current (4-wire sensor)			
	2DMU	Current (2-wire sensor)			
	R-4L	Resistance (4-conductor connection)			
• Measuring range	Refer to the respective section for the measuring ranges of the input channels that you can set.		± 10 V		
• Noise suppression	400 Hz; 60 Hz; 50 Hz; none		50 Hz		
• Smoothing	None Strong		None		

[1] Only in the CR (central rack) is it possible to start up the analog modules with the default settings.

Measured value smoothing

You will find information that is generally applicable to the smoothing of analog values in the respective section. You can only set strong smoothing for the SM 431; AI 8 x 14 Bit.

The module cycle time is a constant, irrespective of how many channels are enabled. It therefore has no effect on the filter settling time, which is defined by the parameter assignment of interference frequency suppression and smoothing.

Filter settling time with strong smoothing

Table 5-54 Interference frequency suppression and filter settling time with smoothing

Noise suppression	Smoothing	Filter settling time in ms
None	Strong	-
50 Hz	Strong	100
60 Hz	Strong	83,333
400 Hz	Strong	12,5

Step response with strong smoothing

The following figure illustrates the contents of the table above. It shows the filter settling time after which, in the case of a step response, the smoothed analog value is applied to almost 100%, depending on the interference frequency suppression that has been set. The figure applies to every change of signal at an analog input.

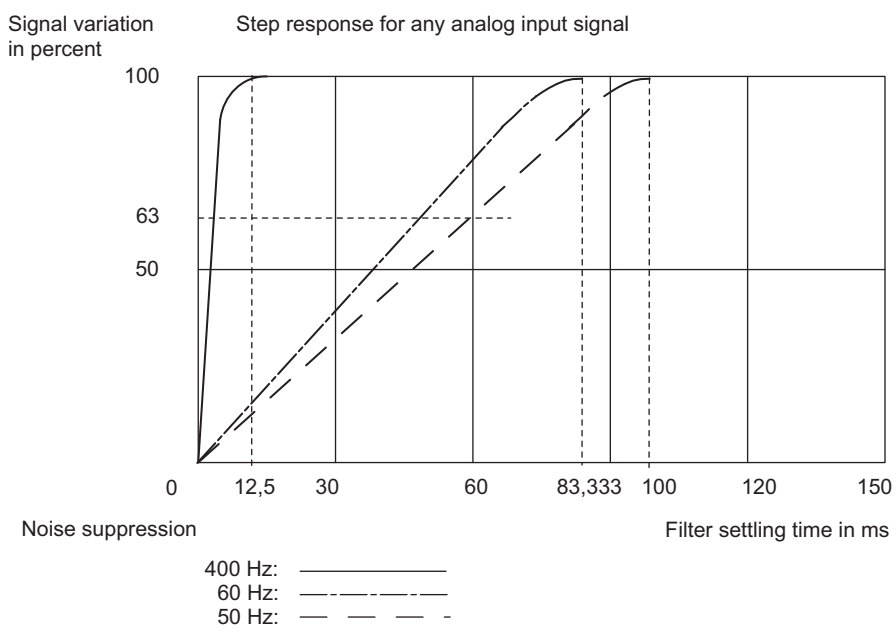

Figure 5-29 Step response of the SM 431; AI 8 x 14 Bit (6ES7 431-1KF20-0AB0)

See also

General information about parameter assignment (Page 196)
Measuring methods and measuring ranges of SM 431; AI 8 x 14 Bit (Page 257)

5.21.3 Measuring methods and measuring ranges of SM 431; AI 8 x 14 Bit

Measuring methods

You can set the measuring method at the input channels:

- Voltage measurement
- Current measurement
- Resistance measurement
- Temperature measurement

You specify the setting by means of the measuring range modules on the module and the "Measuring type" parameter in STEP 7.

Circuit variants for the channels

Two channels are set in each case with the measuring range module. There are therefore restrictions as regards the measuring method for the adjacent channels 0/1, 2/3, 4/5 and 6/7, as shown in the following table:

Table 5-55 Selection of the measuring method for channel n and channel n+1 of the SM 431; AI 8 x 14 Bit (6ES7431-1KF10-0AB0)

Measuring method, channel n	**Measuring method, channel n + 1**								
	Deacti-vated	Voltage	Current 4-DMU	Current 2-DMU	R-4L	R-3L	RTD-4L	RTD-3L	TC-L
Disabled	x	x	x	x					x
Voltage	x	x							x
Current 4-wire trans-ducer	x		x						
Current 2-wire trans-ducer	x			x					
4-conductor resistor	x								
3-conductor resistor	x								
4-conductor thermal resistor	x								
3-conductor thermal resistor	x								
Thermocouples	x	x							x

Example

If you select "current (2-wire transducer)" for channel 6, you can only disable the measuring method or set "current (2-wire transducer)" for channel 7.

Circuit for resistance measurement

The following conditions apply when measuring the resistance and temperature with the SM 431; AI 8 x 14 Bit:

Table 5-56 Channels for resistance measurement of the SM 431; AI 8 x 14 Bit (6ES7431-1KF10-0AB0)

Measuring type parameter	Permissible for channel n	Condition
Resistance (4-conductor connection)	0, 2, 4 or 6	You must disable the "Measuring type" parameter for channels n+1 (1, 3, 5, 7). Reason: The connections of channel n+1 are used to supply the resistance that is connected to channel n.

Unused channels

Unused channels can be left open. Set the measuring range modules to position "B". You can improve the noise immunity of the module in a measuring environment with serious interference by interconnecting M- and M_{ANA}.

Measuring ranges

Set the measuring ranges using the measuring range modules, and at the "measuring method" parameter in *STEP 7*.

Table 5-57 Measuring ranges of the SM 431; AI 8 x 14 Bit (6ES7431-1KF10-0AB0)

Selected measuring method	Measuring range (type of sensor)	Measuring range module settings	Description
V: Voltage	± 1 V	A	The digitized analog values are listed in the section "Representation of analog values for analog input channels" in the voltage measuring range.
	1 to 5 V ± 10 V	B	
2DMU: Current (2-wire transducer)	4 to 20 mA	D	To supply these transducers with current you must connect 24 V to the L+ and M front connector terminals. The digitized analog values are listed in the section "Representation of analog values for analog input channels" in the current measuring range.
4DMU: Current (4-wire transducer)	4 to 20 mA ± 20 mA	C	The digitized analog values are listed in the section "Representation of analog values for analog input channels" in the current measuring range.
R-4L: Resistance (4-conductor connection)	600 Ω	A	The digitized analog values are listed in the section "Representation of analog values for analog input channels" in the resistance measuring range.

Defaults

The module has the following default settings in *STEP 7*:

- Channels 0 to 7: "Voltage" measuring method ; "± 10 V" measuring range

You can use these measuring methods and measuring ranges without configuring the SM 431; AI 8 x 14 Bit in STEP 7.

5.22 Analog input module SM 431; AI 16 x 13 Bit (6ES7431-0HH00-0AB0)

5.22.1 Features

Overview

The analog input module SM 431; AI 16 x 13 bit has the following features:

- 16 inputs for current/voltage measurement
- Various measuring ranges, adjustable in parallel
- Resolution 13 bits
- Non-isolated between analog section and bus
- Maximum permitted common mode voltage between the channels or between the reference potentials of the connected sensors and central grounding point 2 V DC/AC

Circuit diagram for SM 431; AI 16 x 13 bit

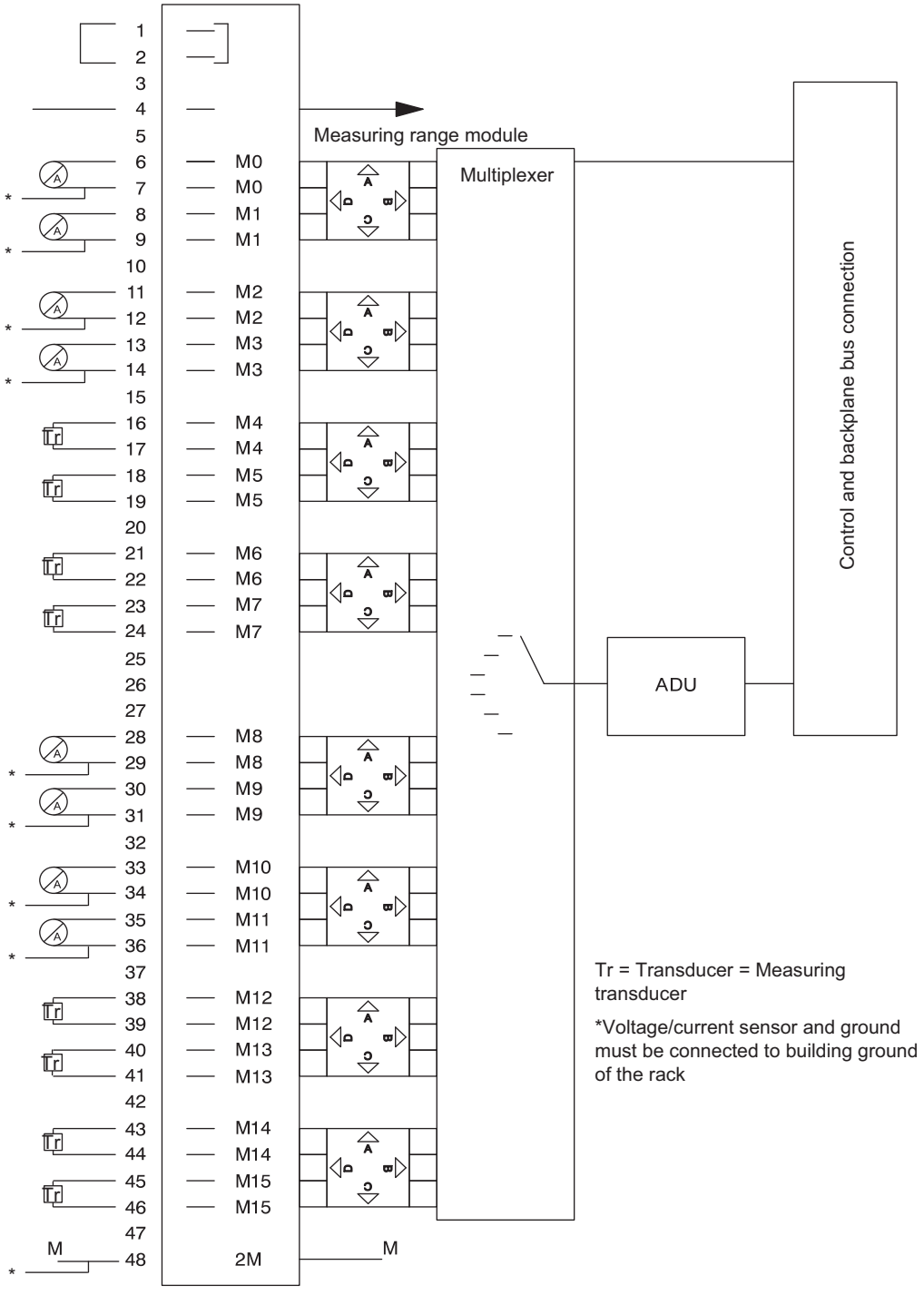

Figure 5-30 Circuit diagram for SM 431; AI 16 x 13 bit

Connection diagram for SM 431; AI 16 x 13 bit

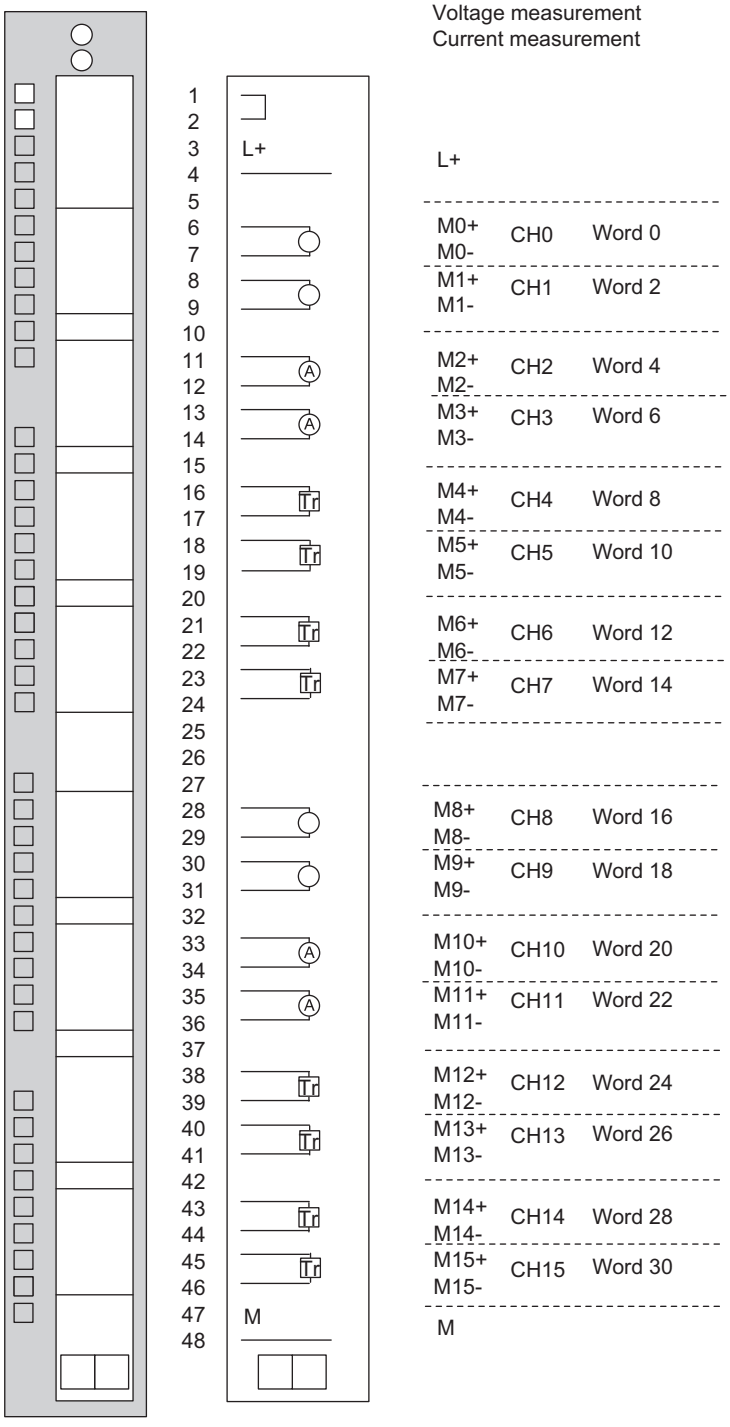

Figure 5-31 Connection diagram for SM 431; AI 16 x 13 bit

Technical specifications for SM 431; AI 16 x 13 bit

Dimensions and weight	
Dimensions W x H x D (mm)	25 x 290 x 210
Weight	ca. 500 g
Module-specific data	
Number of inputs Shielded	16 Maximum 200 m
Voltage, current and potential	
Rated load voltage L+	24 V DC (only required for supply of 2-wire transducers)
• Reverse polarity protection	Yes
• Supply voltage of the measuring transducers	
• Supply current	Maximum 50 mA
• Short-circuit proof	Yes
• Constant measured current for resistance-based sensor	Typ. 1.67 mA
Electrical isolation	
• Between channels and backplane bus	No
• Between channels	No
• Between channels and load voltage L+	No
Permissible potential difference	
• Between inputs and MANA (UCM)	2 V DC / 2 V AC_{SS}
• Between the inputs (UCM)	2 V DC / 2 V AC_{SS}
Insulation tested at	
• Between bus and chassis ground	500 Vac or 707 Vdc (type test)
• Current consumption	
• From backplane bus (5 V)	Maximum 100 mA
• From load voltage L+ (with 16 connected fully controlled 2-wire transducers)	Maximum 400 mA
Module power loss	Typ. 2 W
Formation of analog values	
Measuring principle	Integrating
Integration time/conversion time/resolution (per channel)	(Not part of the response time)
• Configurable	Yes
• Interference voltage suppression f1 in Hz	60 / 50
• Integration time in ms	50 / 60
• Basic conversion time in ms	55 / 65
• Resolution (including overrange)	13 bits
Measured value smoothing	Not possible
Basic execution time of the module in ms (all channels enabled)	880 / 1040
Noise suppression, error limits	

Interference voltage suppression for f = nx (f1 ±1%), (f1 = interference frequency) n = 1, 2 , ...	
• Common mode interference (UCM < 2 V)	> 86 dB
• Series-mode interference (peak value of fault < rated value of input range)	> 60 dB
Crosstalk between the inputs	> 50 dB
Operational limit (throughout temperature range, relative to input range)	
• Voltage input – ± 1 V – ± 10 V – 1 to 5 V	 ± 0.65% ± 0.65% ± 1%
• Current input – ± 20 mA – 4 to 20 mA	 ± 0.65% ± 0.65%
Basic error limit (operational limit at 25°C, relative to input range)	
• Voltage input – ± 1 V – ± 10 V – 1 to 5 V	 ± 0.25% ± 0.25% ± 0.5%
• Current input – ± 20 mA – 4 to 20 mA	 ± 0.25% ± 0.25%
Temperature error (relative to input range)	± 0.01 % / K
Linearity error (relative to input range)	± 0.05%
Repeat accuracy (in settled state at 25°C, relative to input range)	± 0.01%
Status, interrupts, diagnostics	
Interrupts	None
Diagnostic functions	None
Substitute values can be connected	No
Data for selecting a sensor	
Input ranges (rated values)/input resistance	
• Voltage	± 1 V / 10 MΩ ± 10 V / 100 MΩ 1 to 5 V / 100 MΩ
• Current	± 20 mA / 50 Ω 4 to 20 mA / 50 Ω
Permissible input voltage for voltage input (destruction limit)	20 V continuous; 75 V for 1 ms (cycle clock ratio 1 : 20)
Permissible input current for current input (destruction limit)	40 mA
Sensor connection	
• For voltage measurement	Possible

• For current measurement – As 2-wire transducer – As 4-wire transducer	 Possible Possible
• Load of 2-wire transducer	Maximum 750 Ω

5.22.2 Commissioning the SM 431; AI 16 x 13 Bit

Introduction

You set the mode of operation of the SM 431; AI 16 x 13 Bit by means of measuring range modules on the module and in STEP 7.

Measuring range modules

A measuring range module of the module matches two consecutive channels to each type of sensor. Reposition the measuring range modules to suit the measuring method and range. The steps you have to perform to do this are described in detail in the respective section.

For an overview of the settings of specific measuring methods and ranges, refer to the corresponding table in the section "Measuring methods and measuring ranges of SM 431; AI 16 x 13 Bit". The necessary settings are also shown on the label attached to the module.

Parameters

You will find a description of the general procedure for assigning parameters to analog modules in the respective sections.

The table below provides an overview of configurable parameters, including defaults.

Table 5-58 Parameters of the SM 431; AI 16 x 13 Bit

Parameters	Value range		Default[1]	Parameter type	Scope
Measurement					
• Measuring method	Disabled		U	Static	Channel
	U	Voltage			
	4DMU	Current (4-wire sensor)			
	2DMU	Current (2-wire sensor)			
• Measuring range	For information on configurable measuring ranges of input channels, refer to the chapter "Measuring methods and measuring ranges of SM 431; AI 16 x 13 Bit".		±10 V		
• Noise suppression	60 Hz; 50 Hz		50 Hz		
[1] Only in the CR (central rack) is it possible to start up the analog modules with the default settings.					

See also

General information about parameter assignment (Page 196)

Measuring methods and measuring ranges of SM 431; AI 16 x 16 Bit (Page 283)

General information about diagnostic messages (Page 86)

5.22.3 Measuring methods and measuring ranges of SM 431; AI 16 x 13 Bit

Measuring methods

You can set the measuring method at the input channels:

- Voltage measurement
- Current measurement

You specify the setting by means of the measuring range modules on the module and the "Measuring type" parameter in STEP 7.

Circuit variants for the channels

Two channels are set in each case with the measuring range module. There are therefore restrictions as regards the measuring method for the adjacent channels 0/1, 2/3, 4/5, 6/7, 8/9, 10/11, 12/13 and 14/15, as shown in the following table:

Table 5-59 Selection of the measuring method for channel n and channel n+1 of the SM 431; AI 16 x 13 Bit

Measuring method, channel n	Measuring method, channel n + 1					
	Disabled	Voltage ±1 V	Voltage 1 to 5 V	Voltage ±10 V	Current 4-DMU	Current 2-DMU
Disabled	x	x	x	x	x	x
Voltage ±1 V	x	x				
Voltage 1 to 5 V	x		x	x		
Voltage ±10 V	x		x	x		
Current 4-wire transducer	x				x	
Current 2-wire transducer	x					x

Example

If you select "current (2-wire transducer)" for channel 6, you can only disable the measuring method or set "current (2-wire transducer)" for channel 7.

Unused channels

Unused channels can be left open. Set the measuring range modules to position "B". You can improve the noise immunity of the module in a measuring environment with serious interference by interconnecting M- and M_{ANA}.

For unused channels, set the "measuring method" parameter to "deactivated". This reduces the module's cycle time.

Measuring ranges

You set the measuring ranges by means of the measuring range modules on the module and the "Measuring type" parameter in STEP 7.

Table 5-60 Measuring ranges of the SM 431; AI 16 x 13 Bit

Selected measuring method	Measuring range (type of sensor)	Measuring range module settings	Description
V: Voltage	±1 V	A	The digitized analog values are listed in the section "Representation of analog values for analog input channels" in the voltage measuring range.
	1 to 5 V ± 10 V	B	
2DMU: Current (2-wire sensor)	4 to 20 mA	D	To supply these transducers with current you must connect 24 V to the L+ and M front connector terminals. The digitized analog values are listed in the section "Representation of analog values for analog input channels" in the current measuring range.
4DMU: Current (4-wire sensor)	4 to 20 mA ± 20 mA	C	The digitized analog values are listed in the section "Representation of analog values for analog input channels" in the current measuring range.

Default

The module has the following default settings in *STEP 7*:

- Measuring method "voltage"
- Measuring range "± 10 V".

You can use this combination of measuring method and measuring range without configuring the SM 431; AI 16 x 13 Bit in *STEP 7*.

See also

Representation of analog values of analog input channels (Page 166)

5.23 Analog input module SM 431; AI 16 x 16 Bit (6ES7431-7QH00-0AB0)

5.23.1 Features

Overview

The analog input module SM 431; AI 16 x 16 bit has the following features:

- 16 inputs for voltage measurement, current measurement and temperature measurement with thermocouples (TC)
- 8 inputs for resistance and temperature measurement with resistance thermometers (RTD)
- Various measuring ranges, adjustable in parallel
- Resolution 16 bits
- Configurable diagnostics
- Configurable diagnostic interrupt
- Configurable limit alarm
- Configurable end-of-cycle interrupt
- Analog section isolated from the CPU
- Maximum permitted common mode voltage between channels or between channel and central grounding point 120 V AC

Circuit diagram for SM 431; AI 16 x 16 bit

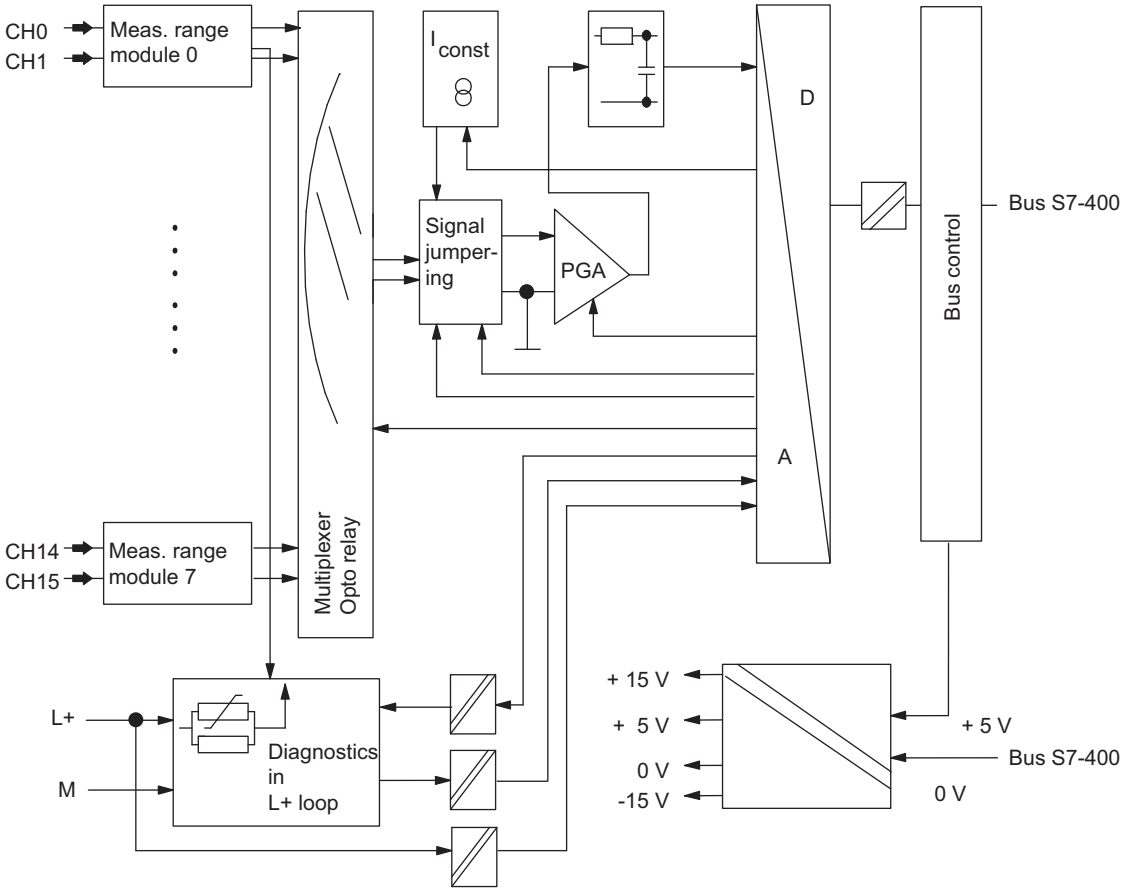

Figure 5-32 Circuit diagram for SM 431; AI 16 x 16 bit

Connection diagram for SM 431; AI 16 x 16 bit

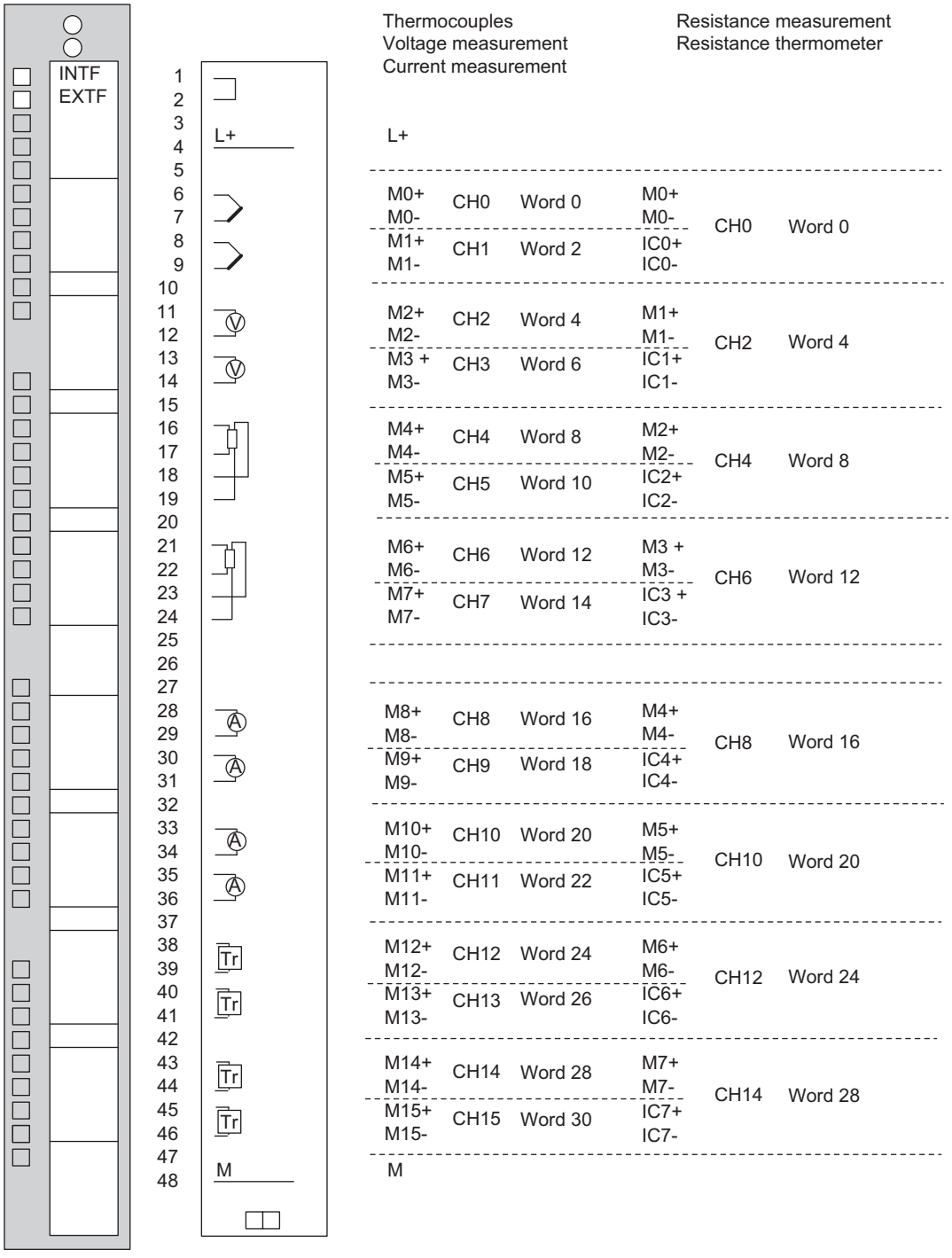

Figure 5-33 Connection diagram for SM 431; AI 16 x 16 bit

Technical specifications for SM 431; AI 16 x 16 bit

Dimensions and weight	
Dimensions W x H x D (mm)	25 x 290 x 210
Weight	ca. 500 g
Module-specific data	
Number of inputs • For resistance-based sensor	16 8
Cable length	
Shielded with input range ≦ 80 mV and with thermocouples	Maximum 200 m Maximum 50 m
Voltage, current and potential	
Rated load voltage L+	24 V DC (only required for supply of 2-wire transducers)
• Reverse polarity protection	Yes
Supply voltage of the measuring transducers	
• Supply current	Maximum 50 mA
• Short-circuit proof	Yes
Constant measured current for resistance-based sensor	Typ. 1.67 mA
Electrical isolation	
• Between channels and backplane bus • Between channels • Between channels and load voltage L+	Yes No Yes
Permissible potential difference • Between inputs and MANA (UCM)	 60 V DC/30 V AC (SELV)
• Between the inputs (UCM)	60 V DC/30 V AC (SELV)
• Between MANA and Mintern (UISO)	60 V DC/30 V AC (SELV)
Insulation tested at	
• Between bus and L+/M	2120 V DC
• Between bus and analog section	2120 V DC
• Between bus and chassis ground	500 V DC
• Between analog section and L+/M	500 V DC
• Between analog section and chassis ground	2120 V DC
• Between L+/M and chassis ground	2120 V DC
Current consumption	
• From backplane bus (5 V)	Maximum 700 mA
• From load voltage L+ (with 16 connected fully controlled 2-wire transducers)	Maximum 400 mA
Module power loss	Typ. 4.5 W
Formation of analog values	
Measuring principle	Integrating
Integration time/conversion time/resolution (per channel)	(Not part of the response time)
• Configurable	Yes

• Interference voltage suppression f1 in Hz	400 / 60 / 50
• Integration time in ms	2.5 / 16.7 / 20
• Basic conversion time in ms	6 / 20.1 / 23.5
• Additional conversion time for resistance measurement with 3-wire connection in ms	12 / 40.2 / 47
• Additional conversion time for wire-break monitoring in ms	4.3 / 4.3 / 4.3
• Additional conversion time for resistance measurement in ms	5.5 / 5.5 / 5.5
• Resolution (including overrange)	16 / 16 / 16 bits
Measured value smoothing	Configurable in 4 stages
Basic execution time of the module in ms (all channels enabled)	96 / 322 / 376
Noise suppression, error limits	
Interference voltage suppression for f = nx (f1 ±1%), (f1 = interference frequency) n = 1, 2 , ...	
• Common mode interference (UCM < 120 Vss)	> 100 dB
• Series-mode interference (peak value of fault < rated value of input range)	> 40 dB
Crosstalk between the inputs	> 70 dB
Operational limit (throughout temperature range, relative to input range)	
• Voltage input – ± 25 mV – ± 50 mV – ± 80 mV – ± 250 mV – ± 500 mV – ± 1 V – ± 2.5 V – ± 5 V – 1 to 5 V – ± 10 V	 ± 0.35% ± 0.32% ± 0.31% ± 0.3% ± 0.3% ± 0.3% ± 0.3% ± 0.3% ± 0.3% ± 0.3%
• Current input – 0 to 20 mA – ± 5 mA – ± 10 mA – ± 20 mA – 4 to 20 mA	 ± 0.3% ± 0.3% ± 0.3% ± 0.3% ± 0.3%

• Resistance measurement	
– 0 to 48 Ω; 4-wire measurement	± 0.3%
– 0 to 150 Ω; 4-wire measurement	± 0.3%
– 0 to 300 Ω; 4-wire measurement	± 0.3%
– 0 to 600 Ω; 4-wire measurement	± 0.3%
– 0 to 5000 Ω; 4-wire measurement (around 6000 Ω)	± 0.3%
– 0 to 300 Ω; 3-wire measurement	± 0.4%
– 0 to 600 Ω; 3-wire measurement	± 0.4%
– 0 to 5000 Ω; 3-wire measurement (around 6000 Ω)	± 0.4%
• Thermocouples	
– TC type B	± 11.5 K
– TC type R	± 7.3 K
– TC type s	± 8.3 K
– TC type T	± 1.7 K
– TC type E	± 3.2 K
– TC type J	± 4.3 K
– TC type K	± 6.2 K
– TC type U	± 2.8 K
– TC type L	± 4.2 K
– TC type N	± 4.4 K
• Resistance thermocouples 4-conductor standard measuring range	
– Pt 100	± 3.1 K
– Pt 200	± 4.9 K
– Pt 500	± 3.9 K
– Pt 1000	± 3.1 K
– Ni 100	± 0.8 K
– Ni 1000	± 0.8 K
Climatic measuring range	
– Pt 100	± 0.4 K
– Pt 200	± 0.4 K
– Pt 500	± 0.4 K
– Pt 1000	± 0.4 K
– Ni 100	± 0.8 K
– Ni 1000	± 0.8 K

• Resistance thermocouples 3-conductor standard measuring range	
– Pt 100	± 4.2 K
– Pt 200	± 6.5 K
– Pt 500	± 5.2 K
– Pt 1000	± 4.2 K
– Ni 100	± 1.0 K
– Ni 1000	± 1.0 K
Climatic measuring range	
– Pt 100	± 0.5 K
– Pt 200	± 0.5 K
– Pt 500	± 0.5 K
– Pt 1000	± 0.5 K
– Ni 100	± 1.0 K
– Ni 1000	± 1.0 K
Basic error limit (operational limit at 25°C, relative to input range)	
• Voltage input	
– ± 25 mV	± 0.23%
– ± 50 mV	± 0.19%
– ± 80 mV	± 0.17%
– ± 250 mV	± 0.15%
– ± 500 mV	± 0.15%
– ± 1 V	± 0.15%
– ± 2.5 V	± 0.15%
– ± 5 V	± 0.15%
– 1 to 5 V	± 0.15%
– ± 10 V	± 0.15%
• Current input	
– 0 to 20 mA	± 0.15%
– ± 5 mA	± 0.15%
– ± 10 mA	± 0.15%
– ± 20 mA	± 0.15%
– 4 to 20 mA	± 0.15%

• Resistance measurement	
– 0 to 48 Ω; 4-wire measurement	± 0.15%
– 0 to 150 Ω; 4-wire measurement	± 0.15%
– 0 to 300 Ω; 4-wire measurement	± 0.15%
– 0 to 600 Ω; 4-wire measurement	± 0.15%
– 0 to 5000 Ω; 4-wire measurement (around 6000 Ω)	± 0.15%
– 0 to 300 Ω; 3-wire measurement	± 0.3%
– 0 to 600 Ω; 3-wire measurement	± 0.3%
– 0 to 5000 Ω; 3-wire measurement (around 6000 Ω)	± 0.3%
• Thermocouples	
– TC type B	± 7.6 K
– TC type R	± 4.8 K
– TC type s	± 5.4 K
– TC type T	± 1.1 K
– TC type E	± 1.8 K
– TC type J	± 2.3 K
– TC type K	± 3.4 K
– TC type U	± 1.7 K
– TC type L	± 2.3 K
– TC type N	± 2.6 K
• Resistance thermocouples 4-conductor standard measuring range	
– Pt 100	± 1.6 K
– Pt 200	± 2.5 K
– Pt 500	± 2.0 K
– Pt 1000	± 1.6 K
– Ni 100	± 0.4 K
– Ni 1000	± 0.4 K
Climatic measuring range	
– Pt 100	± 0.2 K
– Pt 200	± 0.2 K
– Pt 500	± 0.2 K
– Pt 1000	± 0.2 K
– Ni 100	± 0.4 K
– Ni 1000	± 0.4 K

• Resistance thermocouples 3-conductor standard measuring range – Pt 100 – Pt 200 – Pt 500 – Pt 1000 – Ni 100 – Ni 1000´ Climatic measuring range – Pt 100 – Pt 200 – Pt 500 – Pt 1000 – Ni 100 – Ni 1000	 ± 3.1 K ± 4.9 K ± 3.9 K ± 3.1 K ± 0.8 K ± 0.8 K ± 0.4 K ± 0.4 K ± 0.4 K ± 0.4 K ± 0.8 K ± 0.8 K
Temperature error (relative to input range)	± 0.004 % / K
Linearity error (relative to input range)	± 0.01%
Repeat accuracy (in settled state at 25°C, relative to input range)	± 0.1%
Status, interrupts, diagnostics	
Interrupts	
• Hardware interrupt	Configurable
• Limit alarm	Configurable
• Diagnostic interrupt	Configurable
Diagnostic functions	
• Group fault display – For internal fault – For external fault	 Red LED (INTF) Red LED (EXTF)
• Diagnostic information can be read out	Yes
Substitute values can be connected	No
Data for selecting a sensor	
Input ranges (rated values)/input resistance	
• Voltage	± 25 mV / 1 MΩ ± 50 mV / 1 MΩ ± 80 mV / 1 MΩ ± 250 mV / 1 MΩ ± 500 mV / 1 MΩ ± 1 V / 1 MΩ ± 2.5 V / 1 MΩ ± 5 V / 1 MΩ 1 to 5 V / 1 MΩ ± 10 V / 1 MΩ

• Current	0 to 20 mA / 50 Ω ± 5 mA / 50 Ω ± 10 mA / 50 Ω ± 20 mA / 50 Ω 4 to 20 mA / 50 Ω
• Resistance	0 to 48 Ω / 1 MΩ 0 to 150 Ω / 1 MΩ 0 to 300 Ω / 1 MΩ 0 to 600 Ω / 1 MΩ 0 to 6000 Ω / 1 MΩ (can be used up to 5000 Ω)
• Thermocouples	TC type B / 1 MΩ TC type R / 1 MΩ TC type S / 1 MΩ TC type T / 1 MΩ TC type E / 1 MΩ TC type J / 1 MΩ TC type K / 1 MΩ TC type U / 1 MΩ TC type L / 1 MΩ TC type N / 1 MΩ
• Resistance thermometer	Pt 100 / 1 MΩ Pt 200 / 1 MΩ Pt 500 / 1 MΩ Pt 1000 / 1 MΩ Ni 100 / 1 MΩ Ni 1000 / 1 MΩ
Permissible input voltage for voltage input (destruction limit)	Maximum 18 V continuous; 75 V for 1 ms (cycle clock ratio 1 : 20)
Permissible input current for current input (destruction limit)	40 mA
Sensor connection	
• For voltage measurement	Possible
• For current measurement – As 2-wire transducer – As 4-wire transducer	 Possible Possible
• For resistance measurement – With 2-wire connection – – With 3-wire connection – With 4-wire connection	 Possible; line resistance is also measured Possible Possible
• Load of 2-wire transducer	Maximum 750 Ω
Characteristic curve linearization	Configurable
• For thermocouples	Type B, R, S, T, E, J, K, U, L, N
• For resistance thermometers	Pt 100, Pt 200, Pt 500, Pt 1000, Ni 100, Ni 1000

Temperature compensation	Yes, configurable
• Internal temperature compensation	No
• External temperature compensation with compensating box	Possible
• External temperature compensation with Pt 100	Possible
• Compensation for definable reference junction temperature	Possible
Technical unit for temperature measurement	Degrees Celsius

5.23.2 Commissioning the SM 431; AI 16 x 16 Bit

Setting the operating mode

You set the mode of operation of the SM 431; AI 16 x 16 Bit by means of measuring range modules on the module and in STEP 7.

Measuring range modules

A measuring range module of the module matches two channels and one resistance channel to each type of sensor. Reposition the measuring range modules to suit the measuring method and range. The steps you have to perform to do this are described in detail in the respective section.

For an overview of the settings of specific measuring methods and ranges, refer to the corresponding table in the section "Measuring methods and measuring ranges of SM 431; AI 16 x 16 Bit". The necessary settings are also shown on the label attached to the module.

Parameters

You will find a description of the general procedure for assigning parameters to analog modules in the respective sections.

The table below provides an overview of configurable parameters, including defaults.

Table 5-61 Parameters of the SM 431; AI 16 x 16 Bit

Parameters	Value range	Default[2]	Parameter type	Scope
Enable				
• Diagnostic interrupt[1] • Hardware interrupt[1]	Yes/no Yes/no	No No	Dynamic	Module
• Destination CPU for interrupt	1 to 4	-	Static	Module
Hardware interrupt trigger				
• End of scan cycle reached at input	Yes/no	No	Static	Channel
• High limit • Low limit	32511 to - 32512 -32512 to 32511	-	Dynamic	Channel
Diagnostics				
• Wire break • Reference channel error • Underflow • Overflow • Short-circuit to M	Yes/no Yes/no Yes/no Yes/no Yes/no	No No No No No	Static	Channel
Measurement				

Parameters	Value range		Default[2]	Parameter type	Scope
• Measuring method	Disabled		U	Static	Channel
	U	Voltage			
	4DMU	Current (4-wire transducer)			
	2DMU	Current (2-wire transducer)			
	R-4L	Resistance (4-conductor connection)			
	R-3L	Resistance (3-conductor connection)			
	RTD-4L	Thermal resistance (linear, 4-wire connection)			
	RTD-3L	Thermal resistance (linear, 3-conductor connection)			
	TC-L	Thermocouple (linear)			
• Measuring range	For information on configurable measuring ranges of input channels, refer to the section "Measuring methods and measuring ranges of SM 431; Ai 16x16 Bit".		±10 V		
• Reference temperature	- 273.15 to 327.67 °C		0,00 °C	Dynamic	Module
• Noise suppression	400 Hz; 60 Hz; 50 Hz		50 Hz		
• Smoothing	None Weak Medium Strong		None		
• Reference junction	None RTD on Channel 0 Reference temperature value		None		

[1] If you use the module in ER-1/ER-2, you must set this parameter to "No" because the interrupt lines are not available in ER-1/ER-2.

[2] Only in the CR (central rack) is it possible to start up the analog modules with the default settings.

A point to note about channels for hardware interrupts with the end of scan cycle trigger

You can configure hardware interrupts for the end of scan cycle **for one** of the 16 channels because the module can only trigger these interrupts on one channel.

Measured value smoothing

You will find information that is generally applicable to the smoothing of analog values in the respective section.

The following figure shows for the module the number of module cycles, in the case of a step response, after which the smoothed analog value is applied to almost 100%, depending on the smoothing setting. The figure applies to every change of signal at an analog input.

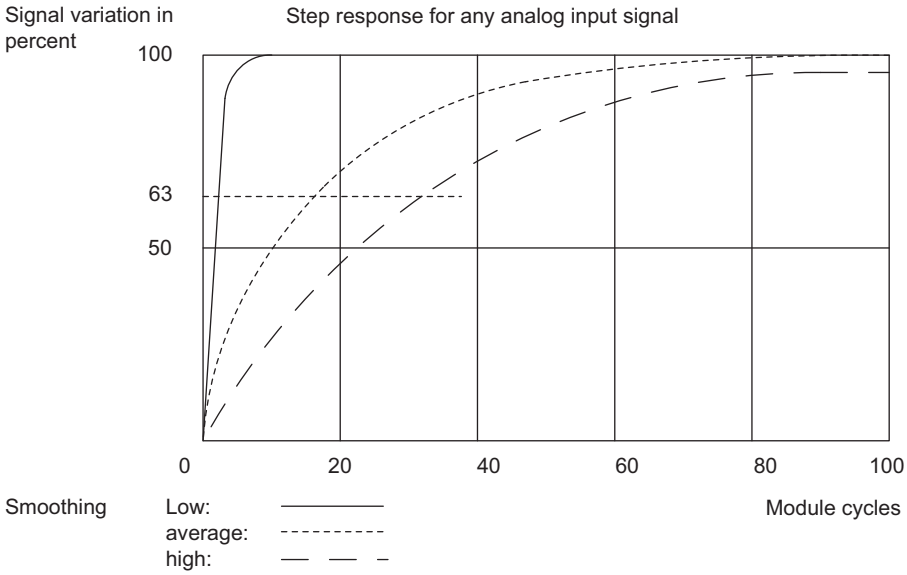

Figure 5-34 Step response of the SM 431; AI 16 x 16 Bit (6ES7431-7QH00-0AB0)

Displaying parameter assignment errors

The SM 431; AI 16 x 16 Bit has diagnostics capability. Below you will find an overview of the displays that are possible for modules with parameter assignment errors.

Table 5-62 Diagnostic information of the SM 431; AI 16 x 16 Bit

Incorrect parameter assignment	Possible display	Explanation
Of the module	• Module error • Internal error • Incorrect parameters	You will find explanations of the diagnostics information in the respective tables.
Affecting certain channels	• Module error • Internal error • Channel error • Incorrect parameters • Channel information available • Channel error vector • Channel parameter assignment error	

See also

Parameters of analog input modules (Page 198)
General information about diagnostic messages (Page 86)

5.23.3 Measuring methods and measuring ranges of SM 431; AI 16 x 16 Bit

Measuring methods

You can set the measuring method at the input channels:

- Voltage measurement
- Current measurement
- Resistance measurement
- Temperature measurement

You specify the setting by means of the measuring range modules on the module and the "Measuring type" parameter in STEP 7.

Circuit variants for the channels

Two channels are set in each case with the measuring range module. There are therefore restrictions as regards to the measuring method for the adjacent channels 0/1, 2/3, 4/5, 6/7, 8/9, 10/11, 12/13 and 14/15, as shown in the following table:

Table 5-63 Selection of the measuring method for channel n and channel n+1 of the SM 431; AI 16 x 16 Bit

Measuring method, channel n	**Measuring method channel n+1**								
	deactivated	**Voltage**	**Current 4-DMU**	**Current 2-DMU**	**R-4L**	**R-3L**	**RTD-4L**	**RTD-3L**	**TC-L**
Disabled	x	x	x	x					x
Voltage	x	x							x
Current 4-wire transducer	x		x						
Current 2-wire transducer	x			x					
4-conductor resistor	x								
3-conductor resistor	x								
Four-wire thermal resistor	x								
3-wire thermal resistor	x								
Thermocouples	x	x							x

Example

If you select "current (2-wire transducer)" for channel 6, you can only disable the measuring method or set "current (2-wire transducer)" for channel 7.

Circuit for resistance and temperature measurement

The following conditions apply when measuring the resistance and temperature with the SM 431; AI 16 x 16 Bit:

Table 5-64 Channels for resistance and temperature measurement of the SM 431; AI 16 x 16 Bit

Measuring type parameter	Permissible for channel n	Condition
Resistance (4-conductor connection)	0, 2, 4, 6, 8, 10, 12 or 14	You must disable the "Measuring type" parameter for channels n +1 (1, 3, 5, 7, 9, 11, 13, 15). Reason: The connections of channel n+1 are used to supply the resistance that is connected to channel n.
Resistance (3-conductor connection)	0, 2, 4, 6, 8, 10, 12 or 14	
Thermal resistance (linear, 4-wire connection)	0, 2, 4, 6, 8, 10, 12 or 14	
Thermal resistance (linear, 3-wire connection)	0, 2, 4, 6, 8, 10, 12 or 14	
Thermocouple (linear)	0 to 15	You can select the reference junction. It is only advisable to specify a reference junction with thermocouples.

Circuit for reference junction compensation for thermocouples

If you select "RTD on Channel 0" as a reference junction for reference junction compensation for thermocouples, the following applies:

Table 5-65 Reference junction compensation via RTD on channel 0 of the SM 431; AI 16 x 16 Bit

Reference junction parameters	Permissible for channel n	Condition
RTD on Channel 0	2 to 15	You must connect and configure on channel 0 a resistance thermometer with linearization, a 3- or 4-conductor connection in **climatic range**. This means that channels 0 and 1 are assigned. Reason: If channel 0 is to be used as the reference junction, a resistance-type sensor must be connected there to record absolute temperatures in the climatic range.

Unused channels

Unused channels can be left open. Set the measuring range modules to position "A". You can improve the noise immunity of the module in a measuring environment with serious interference by short-circuiting the channels.

For unused channels, set the "measuring method" parameter to "deactivated". This reduces the module's cycle time.

Measuring ranges

You set the measuring ranges by means of the measuring range modules on the module and the "Measuring type" parameter in STEP 7.

Table 5-66 Measuring ranges of the SM 431; AI 16 x 16 Bit

Selected measuring method	Measuring range (type of sensor)	Measuring range module settings	Description
V: Voltage	± 25 mV ± 50 mV ± 80 mV ± 250 mV ± 500 mV ± 1 V ± 2.5 V ± 5 V 1 to 5 V ± 10 V	A	The digitized analog values are listed in the section "Representation of analog values for analog input channels" in the voltage measuring range.
2DMU: Current (2-wire sensor)	4 to 20 mA	D	To supply these transducers with current you must connect 24 V to the L+ and M front connector terminals. The digitized analog values are listed in the section "Representation of analog values for analog input channels" in the current measuring range.
4DMU: Current (4-wire sensor)	± 5 mA ± 10 mA 0 to 20 mA 4 to 20 mA ± 20 mA	C	The digitized analog values are listed in the section "Representation of analog values for analog input channels" in the current measuring range.
R-3L: Resistance (3-conductor connection)	300 Ω 600 Ω 6000 Ω (maximum 5000 Ω)	A	The digitized analog values are listed in the section "Representation of analog values for analog input channels" in the resistance measuring range.
R-4L: Resistance (4-conductor connection)	48 Ω 150 Ω 300 Ω 600 Ω 6000 Ω (maximum 5000 Ω)		
TC-L: Thermocouple (linear) (Temperature measurement)	Type B Type N Type E Type R Type S Type J Type L Type T Type K Type U	A	The digitized analog values are listed in the section "Representation of analog values for analog input channels" in the temperature range.

Selected measuring method	Measuring range (type of sensor)	Measuring range module settings	Description
RTD-3L: Thermal resistance (linear, 3-conductor connection) (temperature measurement)	Pt 100 Climatic Pt 200 Climatic Pt 500 Climatic Pt 1000 Climatic Ni 100 Climatic Ni 1000 Climatic Pt 100 Standard Pt 200 Standard Pt 500 Standard Pt 1000 Standard Ni 100 Standard Ni 1000 Standard	A	The digitized analog values are listed in the section "Representation of analog values for analog input channels" in the temperature range.
RTD-4L: Thermal resistance (linear, 4-conductor connection) (temperature measurement)			

Default

The "voltage" measuring method and "± 10 V" measuring range are set by default in STEP 7. You can use this combination of measuring method and measuring range without configuring the SM 431; AI 16 x 16 Bit in STEP 7.

Wire break monitoring

The wire break check is intended primarily for temperature measurements (TC, RTD) or resistance measurements. Always configure the wire break check in these cases as this ensures that in the event of a wire break the measured value provided by the module accepts the data for overrun 7FFFH.

Special characteristics of the wire break check for the voltage measurement methods

In some transducers, incorrect measured values may occur due to the fact that the wire break check is enabled. If so, disable the wire break check.

Reason: Some transducers try to correct the test current and in doing so corrupt the setpoint value they provide.

Points to note about the wire break check when current sensors are connected

A wire break check of current sensors is not possible for the SM 431; AI 16 x 16 Bit except in life-zero areas. You can therefore only configure the wire break check for the "Current (4-wire transducer)" measuring method and the "4 to 20 mA" measuring range.

Checking for reference channel errors when connecting thermocouples

If you have connected a thermocouple, you can then enable the "Reference channel error" diagnostics if you have configured an "RTD on Channel 0" or "Reference Temperature Value" reference junction.

Points to note about checking for "Underflow" with some measuring methods and measuring ranges

There is now underflow in life-zero areas. A value that is too low or is negative is interpreted as a wire break. You can therefore **not** configure the underflow check for the SM 431; AI 16 x 16 Bit for the following measuring methods and ranges:

Table 5-67 Points to note when checking for "Underflow"

Measuring method	Measuring range
Voltage	1 to 5 V
Current (4-wire sensor)	4 to 20 mA
Current (2-wire sensor)	4 to 20 mA

Points to note about the "Short-circuit to M" diagnostics

You can only configure the check for "Short-circuit to M" for the SM 431; AI 16 x 16 Bit for the "Current (2-wire transducer)" measuring method.

5.24 Analog input module SM 431; AI 8 x RTD x 16 Bit (6ES7431-7KF10-0AB0)

5.24.1 Features

Overview

The analog input module SM 431; AI 8 x RTD x 16 bit has the following features:

- 8 differential inputs for resistance thermometer
- Resistance thermometer configurable
- Linearization of characteristic curves of the resistance thermometer
- Resolution 16 bits
- Update rate 25 ms for 8 channels
- Configurable diagnostics
- Configurable diagnostic interrupt
- Configurable limit alarm
- Analog section isolated from CPU
- The maximum permissible common-mode voltage between the channel and the central grounding point is 60 V DC / 30 V AC (SELV)

Calibration software

The calibration software is only available over the Internet. You will find the latest version of the calibration software under entry ID 12443337.

Following the installation of this software, you can specify user-specific calibration values for each channel and each input range. Further information can be found under ID 12436891 on the Customer Support FAQ page.

Circuit diagram for SM 431; AI 8 x RTD x 16 bit

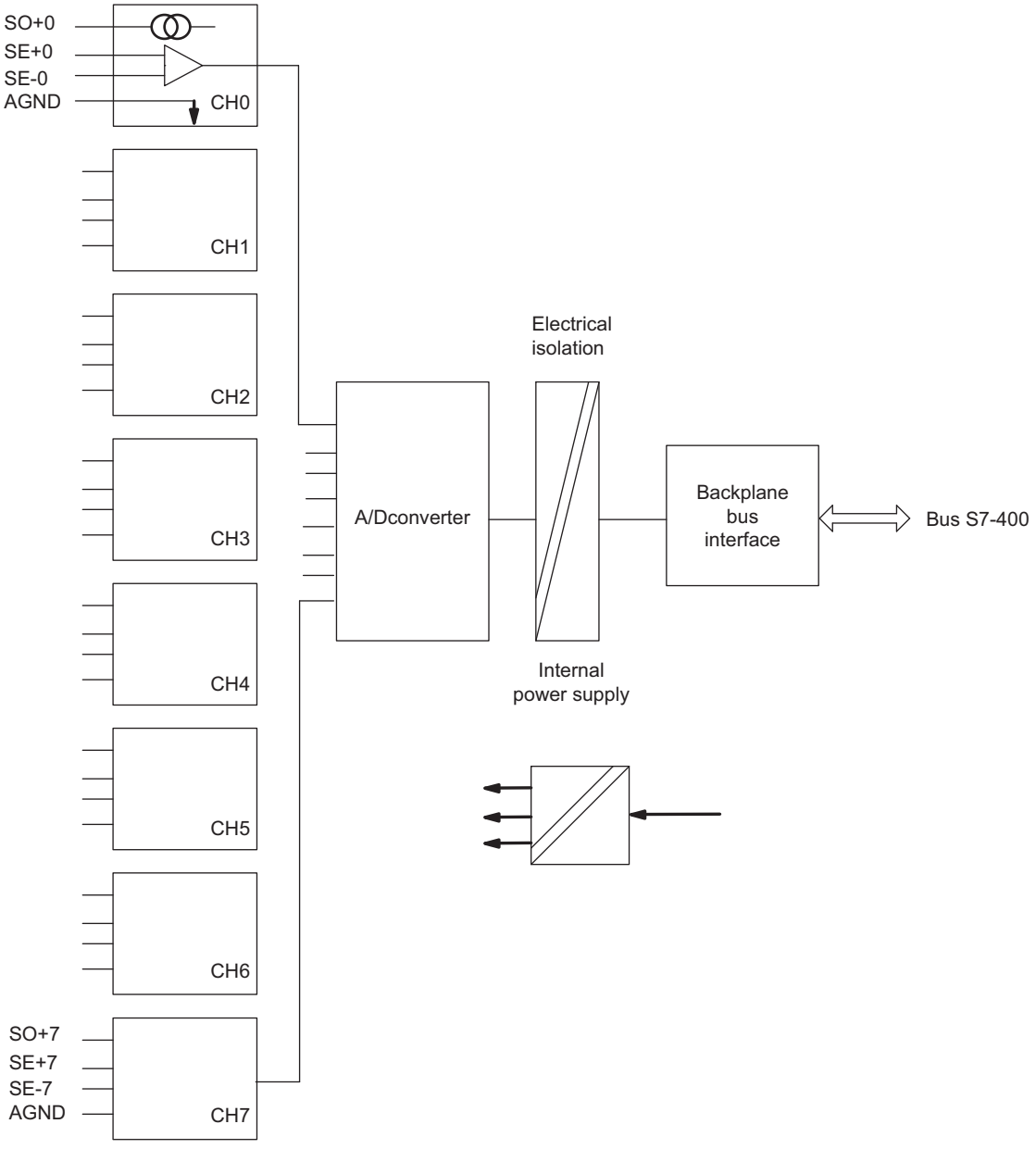

Figure 5-35 Circuit diagram for SM 431; AI 8 x RTD x 16 bit

Note

An external protective network is required for the signal lines in accordance with IEC 61000-4-5 (12 V Blitzductor, model CT919-506, connected in series with all inputs as recommended by the manufacturer).

Connection diagram for SM 431; AI 8 x RTD x 16 bit

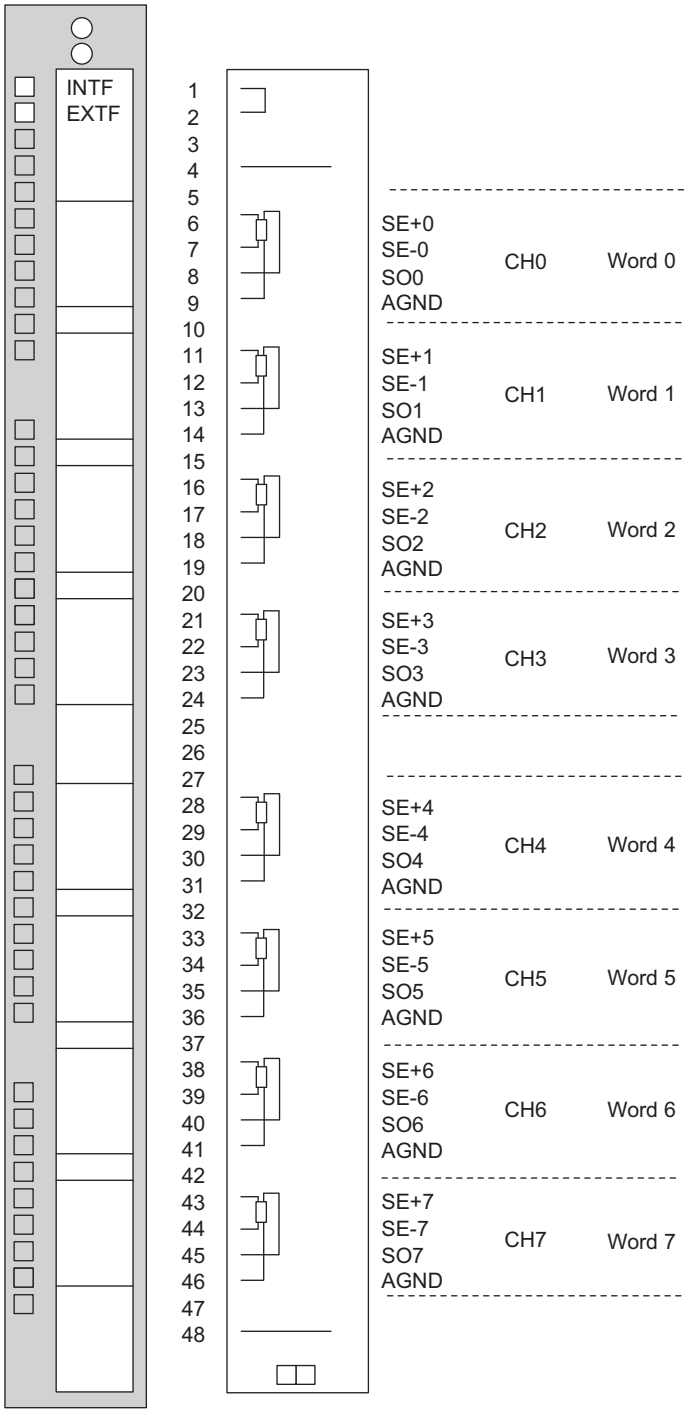

Figure 5-36 Connection diagram for SM 431; AI 8 x RTD x 16 bit

Technical specifications for SM 431; AI 8 x RTD x 16 bit

Dimensions and weight	
Dimensions W x H x D (in mm)	25 x 290 x 210
Weight	ca. 650 g
Module-specific data	
Number of inputs	8
Cable length • Shielded	 Maximum 200 m
Voltage, current and potential	
Constant current for resistance-based sensor	Typ. 1 mA
Electrical isolation	
• Between channels and backplane bus • Between channels	Yes No
Permissible potential difference	
Between M_{ANA} and M_{intern} (U_{ISO})	60 V DC/30 V AC (SELV)
Insulation tested at	500 V DC
Current consumption	
• From backplane bus (5 V)	Maximum 650 mA
Module power loss	Typ. 3.3 W
Formation of analog values	
Measuring principle	Integrating
Integration time/conversion time/resolution	
• Configurable	Yes
• Basic conversion time (all channels enabled)	8 ms/23 ms/25 ms
Additional conversion time / repeat rate	
• Wire-break monitoring	110 ms/4 s
• 3-wire compensation	110 ms/390 s
• Internal self-calibration	
No interference frequency suppression 50/60 Hz	50 ms/110 s
• Resolution, including sign	210 ms/390 s 16 bits
• Interference voltage suppression for interference frequency f1 in Hz	None/50/60
Measured value smoothing	Parameters can be assigned in 4 stages
Basic response time of the module (all channels enabled)	8 ms/23 ms/25 ms
Noise suppression, error limits	
Noise suppression for f = n (fl ± 1%), (f1 = interf. freq.) n = 1, 2, ...	
• Common mode interference (Ucm < 120 V)	> 100 dB
• Series-mode interference (peak value of interference < rated value of input range)	> 50 dB
Crosstalk between the inputs	> 70 dB

Operational limit (throughout temperature range, relative to input range)	
• RTD input – Pt 100 – Pt 200 – Pt 500 – Pt 1000 – Ni 100 – Ni 1000	RTD-4L RTD-3L ±1.8 °C ± 3.4 °C ± 0.8 °C ± 1.7 °C ± 0.4 °C ± 0.7 °C ± 0.3 °C ± 0.4 °C ± 1.5 °C ± 2.1 °C ± 0.2 °C ± 0.3 °C
Basic error limit (operational limit at 25°C, relative to input range)	
• RTD input – Pt 100 – Pt 200 – Pt 500 – Pt 1000 – Ni 100 – Ni 1000	RTD-4L RTD-3L ± 0.5 °C ± 1.0 °C ± 0.3 °C ± 0.5 °C ± 0.3 °C ± 0.4 °C ± 0.2 °C ± 0.2 °C ± 0.3 °C ± 0.6 °C ± 0.2 °C ± 0.2 °C
Linearity error (relative to input range)	Additional fault
• RTD input – Pt 100 – Pt 200 – Pt 500 – Pt 1000 – Ni 100 – Ni 1000	RTD-4L RTD-3L ± 0.2 °C ± 0.3 °C ± 0.2 °C ± 0.2 °C ± 0.1 °C ± 0.1 °C ± 0.1 °C ± 0.1 °C ± 0.1 °C ± 0.2 °C ± 0.1 °C ± 0.1 °C
Repeat accuracy (in settled state at 25°C, relative to input range)	Additional fault
• RTD input – Pt 100 – Pt 200 – Pt 500 – Pt 1000 – Ni 100 – Ni 1000	RTD-4L RTD-3L ± 0.2 °C ± 0.3 °C ± 0.2 °C ± 0.2 °C ± 0.1 °C ± 0.1 °C ± 0.1 °C ± 0.1 °C ± 0.1 °C ± 0.2 °C ± 0.1 °C ± 0.1 °C
Status, interrupts, diagnostics	
Interrupts	
• Hardware interrupt	Configurable
• Hardware interrupt when limit value exceeded	Configurable
• Diagnostic interrupt	Configurable
Diagnostic functions	Configurable

• Group fault display – For internal fault – For external fault – Diagnostic information can be read out	 Red LED (INTF) Red LED (EXTF) Possible
Data for selecting a sensor	
Input range (rated values) / input resistance	
• Resistance thermometer	Pt 100/> 10M Pt 200/> 10M Pt 500/> 10M Pt 1000/> 10M Ni 100/> 10M Ni 1000/> 10M
Maximum input voltage for voltage input (destruction limit)	35 V continuous; 75 V for max. 1 s (duty factor 1:20)
Connection of encoder	
• For resistance measurement with 3-wire connection	Possible (max. permissible line resistance 10 Ohm)
• With 4-wire connection	Possible
Characteristic curve linearization	Configurable
For RTD resistance temperature detection	Pt100...1000, 0.00385 Alpha to DIN IEC 751 Ni 100...1000, 0.00618 Alpha to DIN 43760
[1] Measuring range	
• PT100, PT200	-200 °C to +850 °C
• PT 500	-200 °C to +800 °C
• PT 1000	-200 °C to +240 °C
• Ni 100	-60 °C to +250 °C
• Ni 1000	-60 °C to +130 °C
User data in engineering format	Degrees C/ Degrees F
[1] 7KF10 does not support all measuring ranges for S7.	

5.24.2 Commissioning the SM 431; AI 8 x RTD x 16 Bit

Setting the operating mode

You set the operating mode of the SM 431; AI 8 x RTD x 16 Bit in STEP 7.

Parameters

You will find a description of the general procedure for assigning parameters to analog modules in the respective sections.

The table below provides an overview of configurable parameters, including defaults.

Table 5-68 Parameters of the SM 431; AI 8 x RTD x 16 Bit

Parameters	Value range		Default[2]	Parameter type	Scope
Enable					
• Diagnostic interrupt[1] • Hardware interrupt[1]	Yes/no Yes/no		No No	Dynamic	Module
• Destination CPU for interrupt	1 to 4		-	Static	Module
Trigger for hardware interrupt[3)]			-	Dynamic	Channel
• High limit • Low limit	32767 to - 32768 - 32768 to 32767				
Diagnostics					
• Wire break • Underflow • Overflow	Yes/no Yes/no Yes/no		No No No	Static	Channel
Measurement					
• Measuring method	Disabled		RTD-3L		
	RTD-4L	Thermal resistance (linear, 4-conductor connection)			
	RTD-3L	Thermal resistance (linear, 3-conductor connection)			
• Measuring range	Refer to the respective section for the measuring ranges of the input channels that you can set.		Pt 100 Standard		
• Temperature unit	Degrees Celsius; degrees Fahrenheit		Degrees Celsius	Static	Module

Parameters	Value range	Default[2]	Parameter type	Scope
• Temperature coefficient for temperature measurement with thermal resistance (RTD)	For platinum (Pt) 0.00385 Ω/Ω/ °C 0.003916 Ω/Ω/ °C 0.003902 Ω/Ω/ °C 0.003920 Ω/Ω/ °C For nickel (Ni) 0.00618 Ω/Ω/ °C 0.00672 Ω/Ω/ °C	0,00385	Static	Channel
• Noise suppression	60 Hz; 50 Hz; none	60 Hz		
Smoothing	None Weak Medium Strong	None	Static	Channel

[1] If you use the module in ER-1/ER-2, you must set this parameter to "No" because the interrupt lines are not available in ER-1/ ER-2.

[2] Only in the CR (central rack) is it possible to start up the analog modules with the default settings.

[3] The limit values must be within the temperature range of the connected sensor.

Measured value smoothing

You will find information that is generally applicable to the smoothing of analog values in the respective section.

The following figure shows for the module the number of module cycles, in the case of a step response, after which the smoothed analog value is applied to almost 100%, depending on the smoothing setting. The figure applies to every change of signal at an analog input.

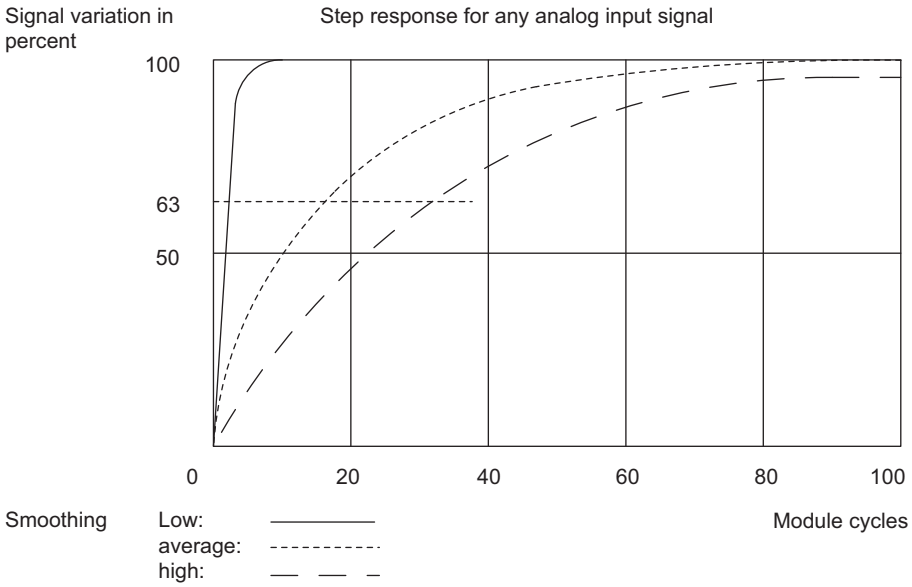

Figure 5-37 Step response of the SM 431; AI 8 x RTD x 16 Bit

Displaying parameter assignment errors

The SM 431; AI 8 x RTD x 16 Bit is capable of diagnostics. Below you will find an overview of the displays that are possible for modules with parameter assignment errors.

Table 5-69 Diagnostic information of the SM 431; AI 8 x RTD x 16 Bit

Incorrect parameter assignment	Possible display	Explanation
Of the module	• Module error • Internal error • Incorrect parameters • No module parameters	You will find explanations of the diagnostics information in the respective tables.
Affecting certain channels	• Module error • Internal error • Channel error • Incorrect parameters • Channel information available • Channel error vector • Channel parameter assignment error • User calibration does not correspond to the parameter assignment	

See also

Parameters of analog input modules (Page 198)

Conversion, cycle, settling and response time of analog modules (Page 193)

General information about diagnostic messages (Page 86)

5.24.3 Measuring methods and measuring ranges of the SM 431; AI 8 x RTD x 16 Bit

Measuring methods

You can set the temperature measurement as the measuring method for the input channels.

Unused channels

For unused channels, set the "measuring method" parameter to "deactivated". This reduces the module's cycle time.

Measuring ranges

Set the measuring ranges by means of the "Measuring range" parameter in STEP 7.

Table 5-70 Measuring ranges of the SM 431; AI 8 x RTD x 16 Bit

Selected measuring method	Measuring range	Description
RTD-3L: Thermal resistance (linear, 3-conductor connection) (temperature measurement)	Pt 100 Standard Pt 200 Standard Pt 500 Standard Pt 1000 Standard Ni 100 Standard Ni 1000 Standard	The digitized analog values are listed in the section "Analog Values of the Analog Input Channels" in the temperature range.
RTD-4L: Thermal resistance (linear, 4-conductor connection) (temperature measurement)		

Default

The default settings of the module in STEP 7 are "Thermal resistor (linear, 3-conductor connection)" for the measuring method and "Pt 100 Standard" for the measuring range. You can use this measuring method with this measuring range without configuring the SM 431; AI 8 x RTD x 16 Bit with STEP 7.

See also

Representation of analog values of analog input channels (Page 166)

5.25 Analog input module SM 431; AI 8 x 16 Bit (6ES7431-7KF00-0AB0)

5.25.1 Features

Overview

The analog input module SM 431; AI 8 x 16 bit has the following features:

- 8 isolated differential inputs for voltage/current/ temperature measurement
- 26 measuring range settings
- Linearization of characteristic curves of the thermocouple
- Resolution 16 bits
- Configurable diagnostics
- Configurable diagnostic interrupt
- Configurable limit alarm
- Analog section isolated from CPU
- Maximum permitted common mode voltage between channels or between channel and central grounding point 120 V AC
- Field connection (6ES7431-7K00-6AA0) with internal reference temperature (included in scope of delivery)

Calibration software

The calibration software is only available over the Internet. You will find the latest version of the calibration software under entry ID 12443337.

Following the installation of this software, you can specify user-specific calibration values for each channel and each input range. Further information can be found under ID 12436891 on the Customer Support FAQ page.

Circuit diagram for SM 431; AI 8 x 16 bit

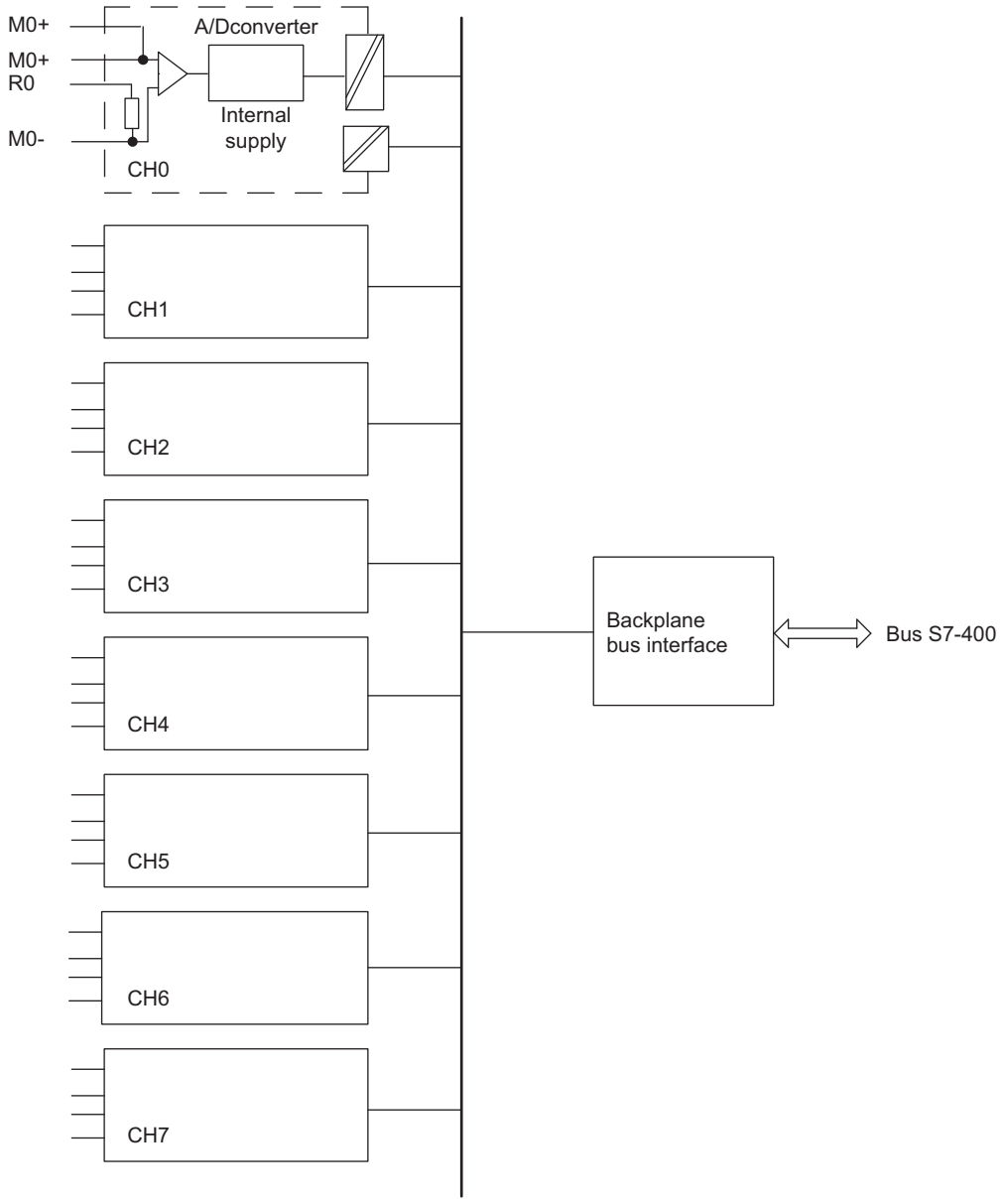

Figure 5-38 Circuit diagram for SM 431; AI 8 x 16 bit

Note

An external protective network for the signal lines is required in accordance with IEC 61000-4-5 (12 V Blitzductor, model CT919-506, connected in series with all inputs as recommended by the manufacturer).

Circuit diagram for SM 431; AI 8 x 16 bit

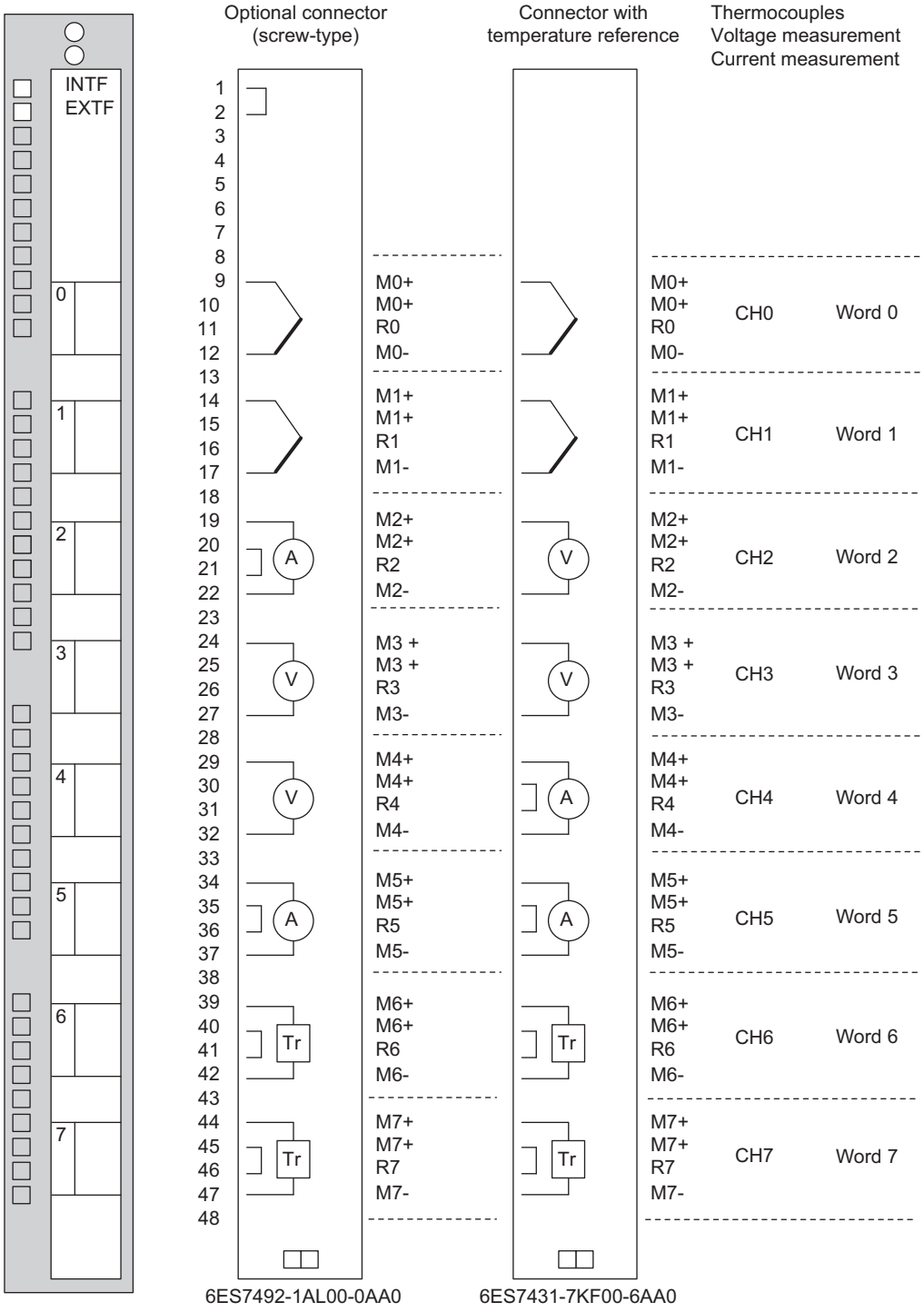

Figure 5-39 Circuit diagram for SM 431; AI 8 x 16 bit

Technical specifications for SM 431; AI 8 x 16 bit

Dimensions and weight	
Dimensions W x H x D (in mm)	25 x 290 x 210
Weight	ca. 650 g
Module-specific data	
Number of inputs	8
Cable length • Shielded	 200 m
Voltage, current and potential	
Electrical isolation	
• Between channels and backplane bus	Yes
• Between channels	Yes
In groups of	1
Permissible potential difference	
• between the inputs (U_{CM})	60 V DC/30 V AC (SELV)
• Between M_{ANA} and M_{intern} (U_{ISO})	60 V DC/30 V AC (SELV)
Insulation tested at	1500 V DC
Current consumption • From backplane bus (5 V)	max. 1200 mA
Module power loss	typical 4.6 W
Formation of analog values	
Measuring principle	Integrating
Integration time/conversion time/resolution (per channel)	
• Configurable	Yes
• Integration time in ms	2.5 16.7 20 100
• Basic conversion time in ms	10 16.7 20 100
• Resolution, including sign	16 bits
• Interference voltage suppression • for interfering frequency f1 in Hz	400 60 50 10
• Measured value smoothing	Parameters can be assigned in 4 stages
• Basic response time of the module (all channels enabled)	40 67 80 400
Noise suppression, error limits	
Noise suppression for f = nx(fl ± 1%), (f1 = interfering frequency) n = 1, 2, ...	
• Common mode interference (U_{cm} < 120 V)	
Current, thermocouple and voltage ranges < 2.5 V	> 120 dB
Voltage ranges ≥2.5 V	> 95 dB
Crosstalk between inputs (U_{cm} < 120 V)	
Current, thermocouple and voltage ranges ≥ 2.5 V	> 120 dB
Voltage range ≥ 2.5 V	> 95 dB
• Series-mode interference (peak value of interference < rated value of input range)	> 80 dB

Operational limit (throughout temperature range, relative to input range)	
• Voltage input	± 0.30 %
• Current input	± 0.50 %
• Temperature error (relative to input range)[2] Over the temperature range of:	
Type U -100 °C to 600 °C	± 3.6 °C
Type L 0 °C to 900 °C	± 2.9 °C
Type T -100 °C to 400 °C	± 2.1 °C
Type J -100 °C to 1200 °C	± 5.0 °C
Type E -100 °C to 1000 °C	± 4.6 °C
Type K 0 °C to 1372 °C	± 3.8 °C
Type N 0 °C to 1300 °C	± 5.7 °C
Type S 200 °C to 1769 °C	± 5.3 °C
Type R 200 °C to 1769 °C	± 6.7 °C
Type B 400 °C to 1820 °C	± 7.3 °C
Noise suppression, error limits (continuation)	
Basic error limit (operational limit at 25°C, relative to input range)	
• Input voltage	± 0.10 %
• Input current	± 0.17%
• Temperature error (relative to input range)[2] Over temperature range of:	
Type U -100 °C to 600 °C	± 1.2 °C
Type L 0 °C to 900 °C	± 1.0 °C
Type T -100 °C to 400 °C	± 0.7 °C
Type J -100 °C to 1200 °C	± 1.7 °C
Type E -100 °C to 1000 °C	± 1.5 °C
Type K 0 °C to 1372 °C	± 1.3 °C
Type N 0 °C to 1300 °C	± 1.9 °C
Type S 200 °C to 1769 °C	± 1.8 °C
Type R 200 °C to 1769 °C	± 2.2 °C

Type B 400 °C to 1820 °C	± 2.2 °C
Linearity error (relative to input range)	Additional error ± 0.05%
Repeat accuracy (in settled state at 25°C, relative to input range)	Additional error ± 0.05%
Connection for compensation of cold connection point	6ES7431-7KF00- 6AA0
Operational limit	
• Internal temperature compensation error	Additional error ± 2.0%
Status, interrupts, diagnostics	
Interrupts	
• Hardware interrupt	Configurable
• Hardware interrupt when limit value exceeded	Configurable
• Diagnostic interrupt	Configurable
Diagnostic functions	Configurable
• Group fault display	Configurable
For internal fault	Red LED (INTF)
For external fault	Red LED (EXTF)
Diagnostic information can be read out	Possible
Monitoring for • wire break	
Data for selecting a sensor	
Input range (rated values) / input resistance	
• Voltage	± 25 mV > 2 MΩ ± 50 mV > 2 MΩ ± 80 mV > 2 MΩ ± 100 mV > 2 MΩ ± 250 mV > 2 MΩ ± 500 mV > 2 MΩ ± 1 V > 2 MΩ ± 2.5 V > 2 MΩ ± 5 V > 2 MΩ + 1 to 5 V > 2 MΩ ± 10 V > 2 MΩ
• Current	± 20 mA 50 Ω + 4 to 20 mA 50 Ω ± 10 mA 50 Ω ± 5 mA 50 Ω ± 3,2 mA 50 Ω
• Thermocouple	Types B, N, > 2 MΩ E, R, S, J, L, T, K, U
Maximum input voltage for voltage input (destruction limit)	35 V continuous; 75 V for max. 1 s (duty factor 1:20)
Maximum input current for current input (destruction limit)	32 mA

Connection of encoder	
• at measuring voltage	Possible
• for current measurement as 4-wire transducer	Possible
Characteristic curve linearization	
• For thermocouples	Types B, N, E, R, S, J, L, T, K, U
Temperature compensation	Yes, configurable
• Internal temperature compensation	Possible
User data in engineering format	Degrees C/ degrees F

[1] The 6ES7431-7KFOO-0AB0 does not support the values defined for S7 for the overreaches and sub-ranges of thermocouples. Depending on the situation, underflow (32768) or overflow (327767) is displayed when the module reaches the end of the thermocouple operating range defined for S7.

[2] Operation of thermocouples above the specified temperatures is possible.

The specified accuracy is at the lower end of the range and is better at higher temperatures.

The accuracy of the thermocouple module at temperatures other than those specified can be calculated using the limit values for the accuracy of input voltage and emf/°C of the thermocouple at the required temperature.

5.25.2 Commissioning the SM 431; AI 8 x 16 Bit

Setting the operating mode

You set the operating mode of the SM 431; AI 8 x16 Bit in STEP 7.

Parameters

You will find a description of the general procedure for assigning parameters to analog modules in the respective sections.

The table below provides an overview of configurable parameters, including defaults.

Table 5-71 Parameters of the SM 431; AI 8 x 16 Bit

Parameters	Value range		Default[2]	Parameter type	Scope
Enable					
• Diagnostic interrupt[1]	Yes/no		No	Dynamic	Module
• Hardware interrupt[1]	Yes/no		No	Dynamic	
• Destination CPU for interrupt	1 to 4		-	Static	
Trigger for hardware interrupt[3)]					
• High limit	32767 to - 32768		-	Dynamic	Channel
• Low limit	- 32768 to 32767		-		
Diagnostics					
• Wire break	Yes/no		No	Static	Channel
• Reference channel error	Yes/no		No		
• Underflow	Yes/no		No		
• Overflow	Yes/no		No		
Measurement					
• Measuring method	Disabled		TC-L	Static	Channel
	U	Voltage			
	4DMU	Current (4-wire transducer)			
	TC-L	Thermocouple (linear)			
• Measuring range	For information on configurable measuring ranges of input channels, refer to the section "Measuring methods and measuring ranges of SM 431, AI 8 x 16 Bit".		Type J		
• Reference temperature	- 273.15 to 327.67 °C -327.68 to 327.67 °C		100 °C	Dynamic	Module

Parameters	Value range	Default[2]	Parameter type	Scope
• Temperature unit[4]	Degrees Celsius; degrees Fahrenheit	Degrees Celsius	Static	Module
• Noise suppression	400 Hz; 60 Hz; 50 Hz; 10 Hz	60 Hz		
• Smoothing	None, weak, medium, strong	None		
• Reference junction (reference to the cold junction)	None Internal Reference temperature value dynamic	Internal	Static	Module

[1] If you use the module in ER-1/ER-2, you must set this parameter to "No" because the interrupt lines are not available in ER-1/ER-2.

[2] Only in the CR (central rack) is it possible to start up the analog modules with the default settings.

[3] The limit values must be within the temperature range of the connected sensor.

[4] Valid for the format of the output temperature and the dynamic reference temperature

Measured value smoothing

For generally valid information on analog value smoothing, refer to the section "Conversion and cycle and response times of analog modules".

The cycle time of the module is a constant in the SM 431; AI 8 x 16 Bit that is not dependent on the number of channels that are enabled. It therefore has no effect on the step response, which is defined by the parameter assignment of interference frequency suppression and smoothing.

Step response

Table 5-72 How response times depend on the configured interference frequency suppression and smoothing of the SM 431; AI 8 x 16 Bit

Interference frequency suppression in Hz	Response time in ms with configured smoothing:			
	None	Weak	Medium	Strong
10	100	200	1600	3200
50	20	40	320	640
60	16,7	33,3	267	533
400	10	20	160	320

The following figures illustrate the contents of table above. They show the response time required for a step response before the smoothed analog value is almost applied to 100%. The figures apply to every change of signal at an analog input.

Step response at an interference frequency suppression of 10 Hz

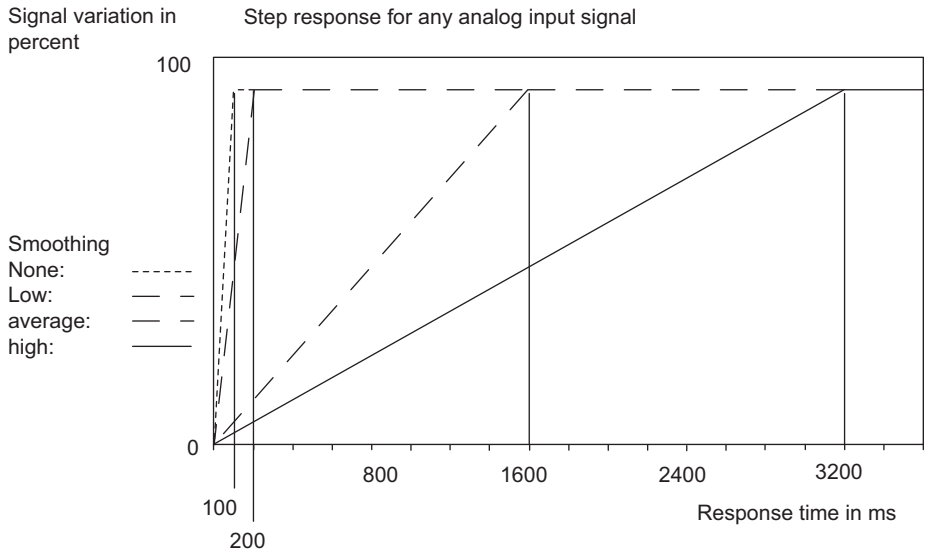

Figure 5-40 Step response at 10 Hz interference frequency suppression of the SM 431; AI 8 x 16 Bit

Step response at an interference frequency suppression of 50 Hz

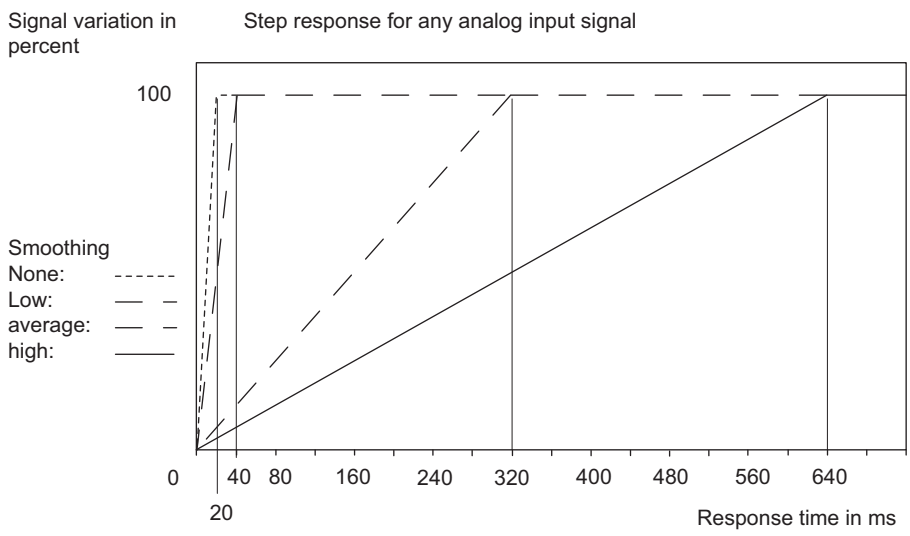

Figure 5-41 Step response at 50 Hz interference frequency suppression of the SM 431; AI 8 x 16 Bit

Step response at an interference frequency suppression of 60 Hz

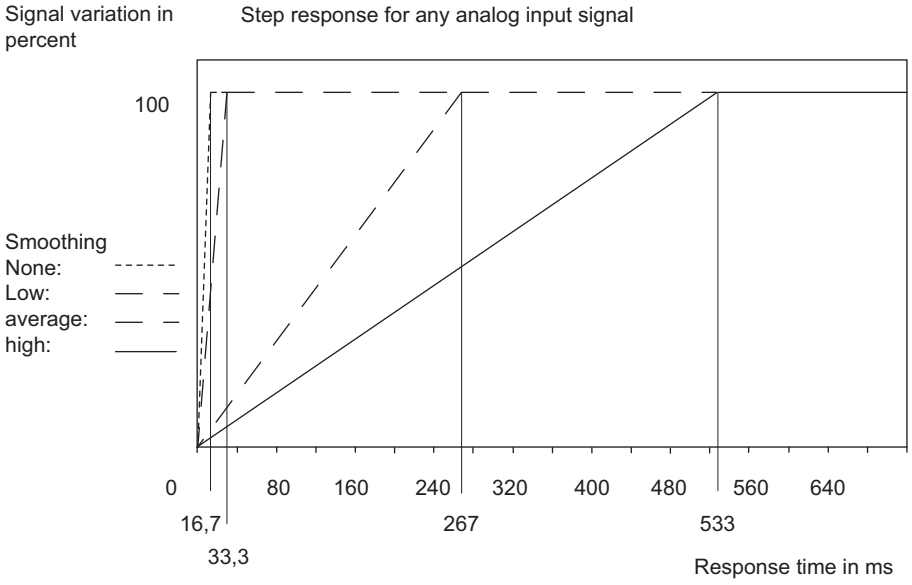

Figure 5-42 Step response at 60 Hz interference frequency suppression of the SM 431; AI 8 x 16 Bit

Step response at an interference frequency suppression of 400 Hz

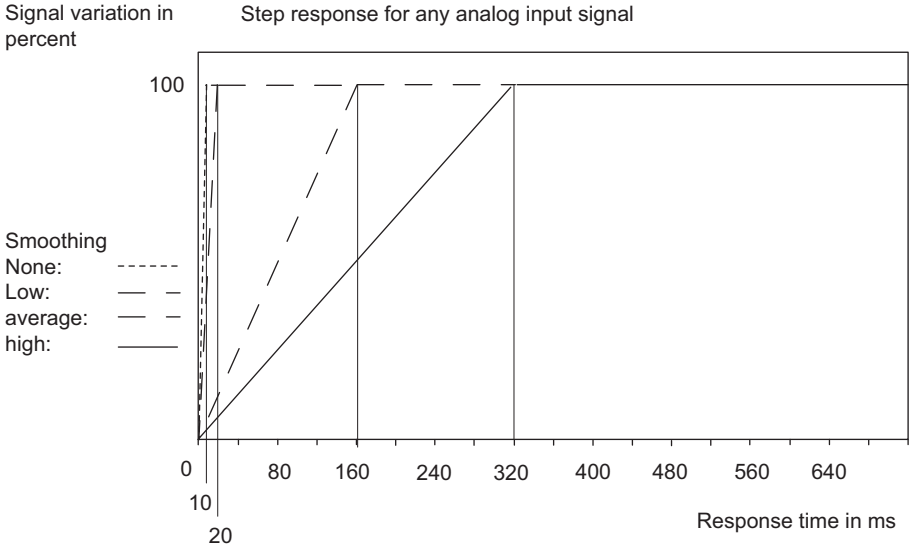

Figure 5-43 Step response at 400 Hz interference frequency suppression of the SM 431; AI 8 x 16 Bit

Displaying parameter assignment errors

The SM 431; AI 8 x 16 Bit has diagnostics capability. Below you will find an overview of the displays that are possible for modules with parameter assignment errors.

Table 5-73 Diagnostic information of the SM 431; AI 8 x 16 Bit

Incorrect parameter assignment	Possible display	Explanation
Of the module	• Module error • Internal error • Incorrect parameters • No module parameters	You will find explanations of the diagnostics information in the respective tables.
Affecting certain channels	• Module error • Internal error • Channel error • Incorrect parameters • Channel information available • Channel error vector • Channel parameter assignment error • User calibration does not correspond to the parameter assignment	

See also

General information about parameter assignment (Page 196)

Conversion, cycle, settling and response time of analog modules (Page 193)

General information about diagnostic messages (Page 86)

5.25.3 Measuring methods and measuring ranges of SM 431; AI 8 x 16 Bit

Measuring methods

You can set the measuring method at the input channels:

- Voltage measurement
- Current measurement
- Temperature measurement

You perform the setting with the "measuring method" parameter in STEP 7.

Unused channels

For unused channels, set the "measuring method" parameter to "deactivated". This reduces the module's cycle time.

Measuring ranges

Set the measuring ranges by means of the "Measuring range" parameter in STEP 7.

Table 5-74 Measuring ranges of the SM 431; AI 8 x 16 Bit

Selected measuring method	Measuring range	Description
V: Voltage	±25 mV ±50 mV ±80 mV ±100 mV ±250 mV ±500 mV ±1 V ±2.5 V ±5 V ±10 V from 1 to 5 V	The digitized analog values are listed in the section "Representation of analog values for analog input channels" in the voltage measuring range.
4DMU: Current (4-wire sensor)	±3.2 mA ±5 mA ±10 mA ±20 mA from 0 to 20 mA from 4 to 20 mA	The digitized analog values are listed in the section "Representation of analog values for analog input channels" in the current measuring range.
TC-L: Thermocouple (linear) (Temperature measurement)	Type B Type N Type E Type R Type S Type J Type L Type T Type K Type U	The digitized analog values are listed in the section "Representation of analog values for analog input channels" in the temperature range.

Default

The default settings of the module in STEP 7 are "Thermocouple (linear)" for the measuring method and "Type J" for the measuring range. You can use this combination of measuring method and measuring range without configuring the SM 431; AI 8 x 16 Bit in STEP 7.

5.26 Analog output module SM 432; AO 8 x 13 Bit (6ES7432-1HF00-0AB0)

5.26.1 Features

Overview

SM 432; AO 8 x 13 bit has the following properties:

- 8 outputs
- the output can be selected for each channel as
  - Voltage output
  - current output
- Resolution 13 bits
- Analog section potential-free relative to CPU and load voltage
- Maximum permissible common mode voltage between the channels or between channels and M_{ANA} 3 V DC

Block diagram of SM 432; AO 8 x 13 bit

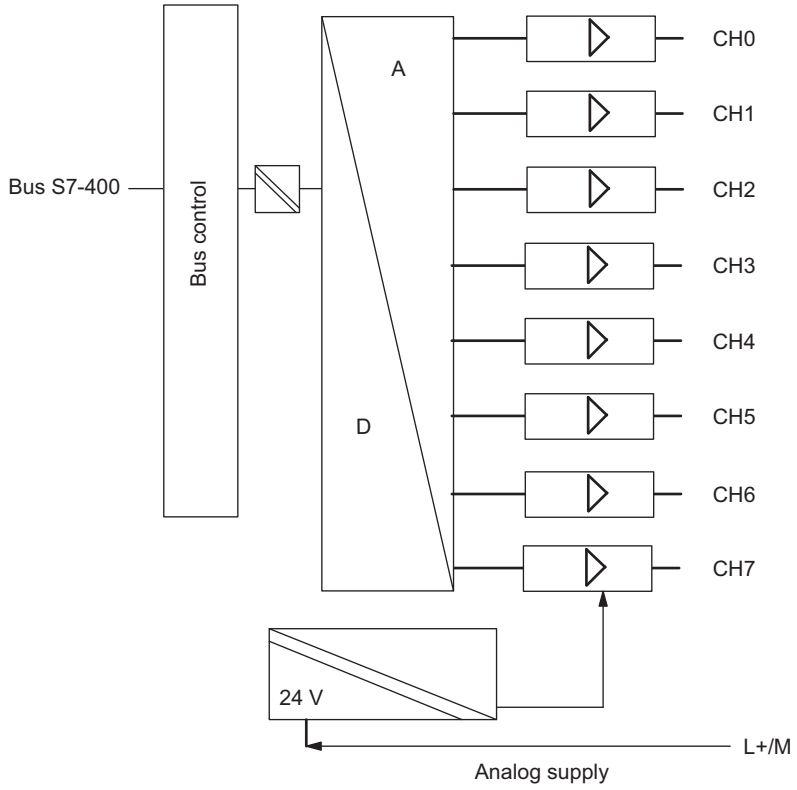

Figure 5-44 Block diagram of SM 432; AO 8 x 13 bit

Connection diagram of SM 432; AO 8 x 13 bit

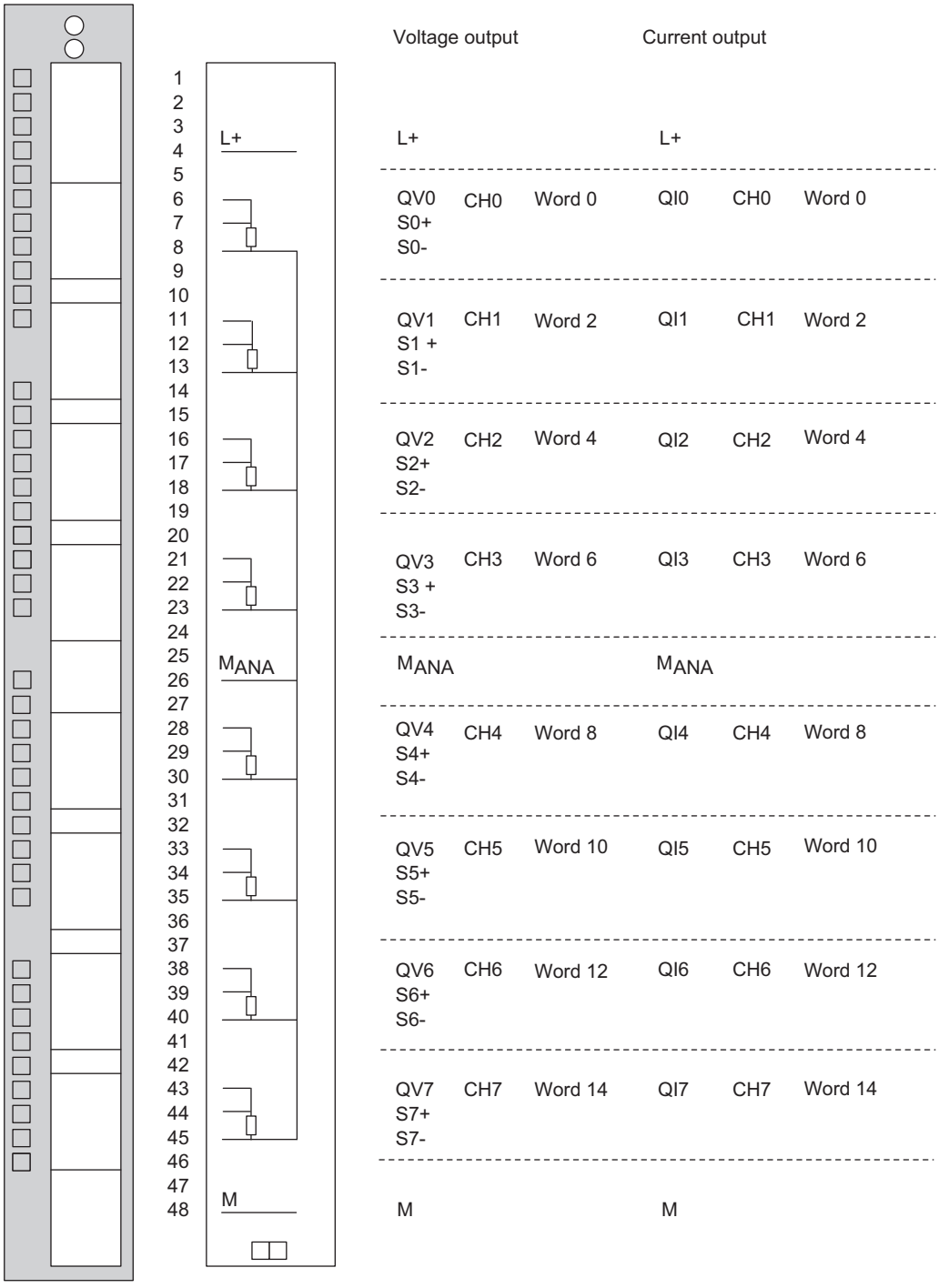

Figure 5-45 Connection diagram of SM 432; AO 8 x 13 bit

Technical specifications of the SM 432; AO 8 x 13 bit

Dimensions and weight	
Dimensions W x H x D (mm)	25 x 290 x 210
Weight	ca. 650 g
Module-specific data	
Number of outputs	8
Cable length • Shielded	 Maximum 200 m
Voltage, current and potential	
Supply voltage of electronics L+	24 V DC
Rated load voltage L+	24 V DC
• Reverse polarity protection	Yes
Electrical isolation	
• Between channels and backplane bus	Yes
• Between channels	No
• Between channels and load voltage L+	Yes
Permissible potential difference	
• between the outputs (UCM)	3 V DC
• between S- and MANA (UCM)	3 V DC
• Between MANA and Mintern (UISO)	60 V DC/30 V AC (SELV)
Insulation tested at	
• Between bus and L+/M	2120 V DC
• Between bus and analog section	2120 V DC
• Between bus and chassis ground	500 V DC
• Between analog section and L+/M	500 V DC
• Between analog section and chassis ground	2120 V DC
• Between L+/M and chassis ground	2120 V DC
Current consumption	
• From backplane bus (5 V)	Maximum 150 mA
• Supply and load voltage L+ (at rated load)	Maximum 400 mA
• Supply and load voltage L + (no load)	Maximum 200 mA
Module power loss	typ. 9 W
Formation of analog values	
Resolution (including overrange)	13 bits
Conversion time (per channel)	
• in the ranges 1 to 5 V and 4 to 20 mA	420 µs
• in all ranges	300 µs
Basic execution time of the module (all channels enabled)	
• in the ranges 1 to 5 V and 4 to 20 mA	3.36 ms
• in all other ranges	2.4 ms
Settling time	
• for resistive load	0.1 ms

• for capacitive load	3.5 ms
• for inductive load	0.5 ms
Noise suppression, error limits	
Noise suppression for f = n (f1 ± 1%), (f1 = interfering frequency) n= 1.2 ...	
• Common mode interference (UCM < AC 3 Vss / 50 Hz)	> 60 dB
Crosstalk between the outputs	> 40 dB
Operational limit (in the entire temperature range, relative to output range)	
• Voltage output – ± 10 V – 0 to 10 V – 1 to 5 V	 ± 0.5% ± 0.5% ± 0.5%
• current output – ± 20 mA – 4 to 20 mV	 ± 1% ± 1%
Basic error limit (operational limit at 25°C, relative to output range)	
• Voltage output – ± 10 V – 0 to 10 V – 1 to 5 V	 ± 0.5% ± 0.5% ± 0.5%
• current output – ± 20 mA – 0 to 20 mA	 ± 0.5% ± 0.5%
Temperature error (relative to output range)	± 0.02 % / K
Linearity error (relative to output range)	± 0.05%
Repeat accuracy (in settled state at 25 °C, relating to output range)	± 0.05%
Output ripple; bandwidth 0 to 50 kHz (relative to output range)	± 0.05%
Status, interrupts, diagnostics	
Interrupts	None
Diagnostic functions	None
Substitute values can be connected	No
Data for selecting an actuator	
Output range (nominal values)	
• Voltage	± 10 V0 to 10 V1 to 5 V
• Current	± 20 mA 0 to 20 mA 4 to 20 mA
Load impedance (in rated range of output)	
• at voltage outputs – capacitive load	min. 1 kΩ max. 1 µF

• at current outputs – inductive load	max. 500 Ω 600 Ω at reduced U_{CM} to < 1 V max. 1 mH
Voltage output	
• Short-circuit protection	Yes
• Short-circuit-current	Maximum 30 mA
current output	
• No-load voltage	max. 19 V
Destruction limit against externally applied voltages / currents	
• Voltage at the outputs against MANA	max. 20 V continuous 75 V for1 ms (duty cycle 1:20
• Current	max. 40 mA continuous
Connection of actuators	
• for voltage output – 2-wire connection – 4-wire connection (measurement cable)	 possible, without compensation of line resistances Possible
• for current output – 2-wire connection	 Possible

5.26.2 Commissioning the SM 432; AO 8 x 13 Bit

Parameters

You will find a description of the general procedure for assigning parameters to analog modules in the respective sections.

For an overview of configurable parameters and defaults, refer to the "Parameters of analog output modules" table.

Assigning parameters to channels

The parameters can be set separately at each output channel of SM 432; AO 8 x 13 Bit. You can thus assign individual parameters to each output channel.

See also

General information about parameter assignment (Page 196)

5.26.3 Output ranges of the SM 432; AO 8 x 13 Bit

Configuration of analog output circuits

You can configure the outputs for operation as voltage or current outputs, or disable these. You configure the output circuits at the "output type" parameter in *STEP 7*.

Unused channels

To make sure that unused output channels of SM 432; AO 8 x 13 Bit are de-energized, set the "Output type" parameter to "deactivated" and leave the terminal open.

Output ranges

You program the output ranges for voltage and current outputs in *STEP 7*.

Table 5-75 Output ranges of the SM 432; AO 8 x 13 Bit

Selected type of output	Output range	Description
Voltage	1 V to 5 V 0 V to 10 V ± 10 V	The digitized analog values are listed in the section "Representation of analog values for analog output channels" in the voltage or current output range.
Current	0 to 20 mA 4 to 20 mA ± 20 mA	

Default

The output type "Voltage" and output range "± 10 V" are set by default at the module. You can always use this combination of output type and range without having to program the SM 432; AO 8 x 13 Bit in *STEP 7*.

Interface modules 6

6.1 Common features of the interface modules

Function

Interface modules (a send IM and a receive IM) are required if one or more expansion racks (ER) are to be connected to a central rack (CR). This configuration is described in the *Installation manual*.

Configuration

Interface modules must always be used together. The send modules (send IMs) are inserted in the CR, whilst the corresponding receive modules (receive IMs) are plugged into the series-connected ER.

Table 6-1 Interface modules of the S7-400

Partner	Areas of application
IM 460-0 IM 461-0	Send IM for local link without PS transfer; with communication bus Receive IM for local link without PS transfer; with communication bus
IM 460-1 IM 461-1	Send IM for local link with PS transfer; without communication bus Receive IM for local link with PS transfer; without communication bus
IM 460-3 IM 461-3	Send IM for remote link up to 102.25 m; with communication bus Receive IM for remote link up to 102.25 m; with communication bus
IM 460-4 IM 461-4	Send IM for remote link up to 605 m; without communication bus Receive IM for remote link up to 605 m; without communication bus

Overview of the connections

Note the rules for connections in the section after next.

Table 6-2 Overview of the connections

	Local connection		Remote connection	
Send IM	460-0	460-1	460-3	460-4
Receive IM	461-0	461-1	461-3	461-4
Max. number of connectable EMs per line	4	1	4	4
Max. distance	5 m	1.5 m	102.25 m	605 m
V transfer	No	Yes	No	No
Max. current transfer per interface	-	5 A	-	-
Communication bus transmission	Yes	No	Yes	No

Connection possibilities for central racks and expansion racks

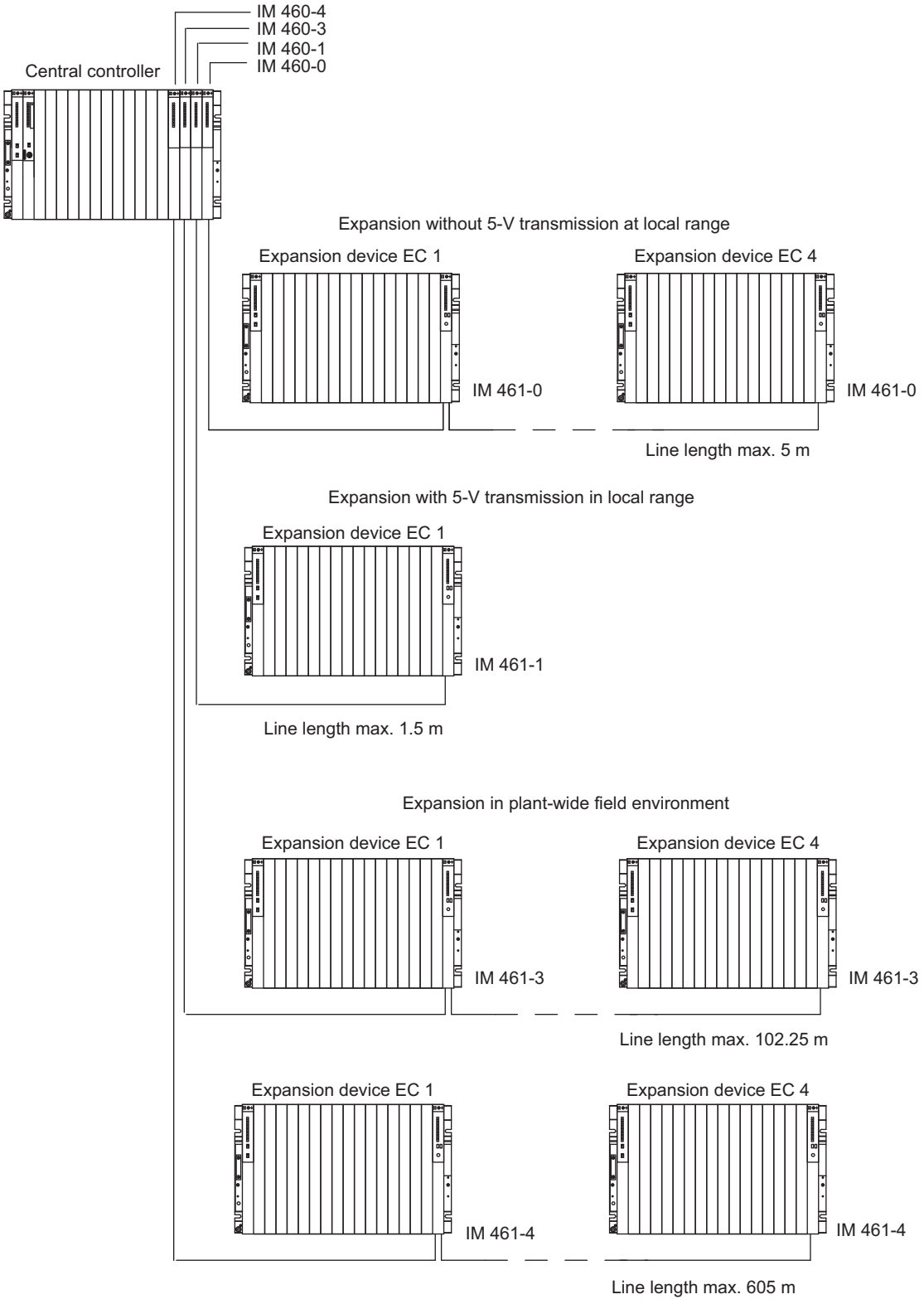

Rules for connection

When you connect a central rack to expansion racks, you must observe the following rules:

- You can connect up to 21 ERs of the S7-400 to one CR.
- The ERs are assigned numbers to identify them. The rack number must be set on the coding switch of the receive IM. Any rack number between 1 and 21 may be assigned. Numbers must not be duplicated.
- You may insert up to six send IMs in one CR. However, only two send IMs with 5 V transfer are allowed in one CR.
- Each line connected to the interface of a send IM can comprise up to four ERs (without 5 V transfer) or one ER (with 5 V transfer).
- The exchange of data via the communication bus is limited to 7 racks, meaning the CR and ER numbers 1 to 6.
- The maximum (total) cable lengths specified for the type of connection must not be exceeded.

Table 6-3 Cable for different connections

Connection type	Maximum (total) line length
Local connection with 5 V transfer via IM 460-1 and IM 461-1	1.5 m
Local connection without 5 V transfer via IM 460-0 and IM 461-0	5 m
Remote connection via IM 460-3 and IM 461-3	102.25 m
Remote connection via IM 460-4 and IM 461-4	605 m

Terminator

The bus must be terminated in the last EU of a line. To do this, plug in the appropriate terminator in the lower front connector of the receive IM in the last EU of the line. Unused front connectors in a send IM do not have to be terminated. The IM 461-1 does not require a terminator.

Table 6-4 Terminators for the Receive IMs

Receive IM	Terminator
IM 461-0	6ES7461-0AA00-7AA0
IM 461-3	6ES7461-3AA00-7AA0
IM 461-4	6ES7461-4AA00-7AA0

The following figure shows you a typical configuration with send IMs, receive IMs and terminators.

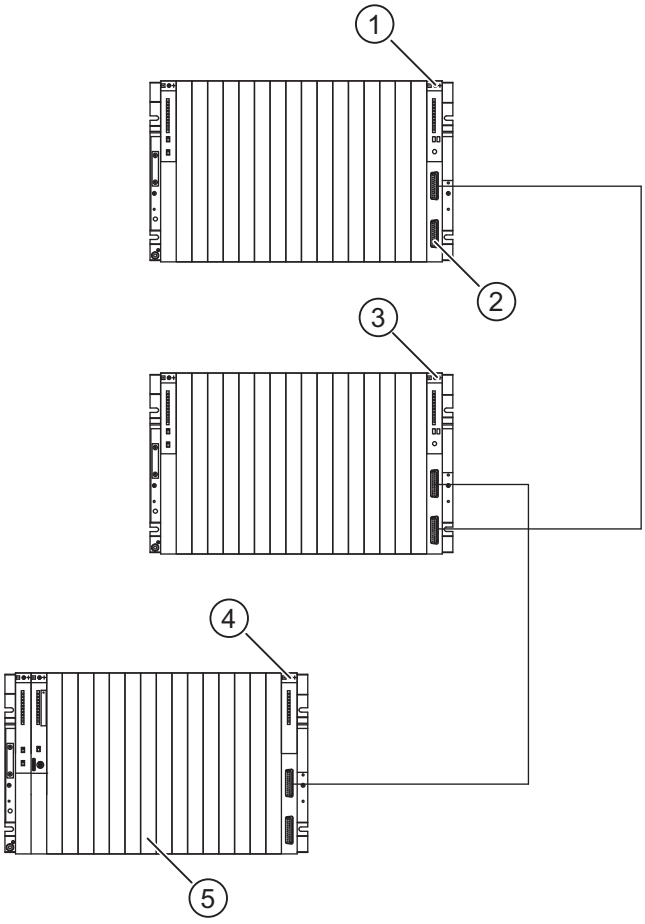

Figure 6-1 Example: Configuration with send IMs, receive IMs and terminators

(1) Receive IM

(2) Terminator

(3) Receive IM

(4) Send IM

(5) CR

Cables

Precut cables are available in different fixed lengths for connecting the individual interface modules. (See Appendix "Accessories and spare parts").

Table 6-5 Cables for interface modules

Interface modules	Cables
IM 460-0 and IM 461-0 IM 460-3 and IM 461-3	6ES7468-1... (P bus and communication bus are transferred)
IM 460-1 and IM 461-1	6ES7468-3... (P bus is transferred; mounting rack is supplied with current via the IM)
IM 460-4 and IM 461-4	6ES7468-1...

Installation and removal of the modules during operation

Please read the following warning on the insertion and removal of the interface modules and associated cables.

CAUTION

Data may be lost or corrupted.

Removing or inserting the interface modules and/or their associated cables under voltage can result in the loss or corruption of data.

Switch off the power supply modules to the CR and ERs you are working on before you carry out any changes.

6.2 Interface modules IM 460-0 (6ES7 460-0AA01-0AB0) and IM 461-0 (6ES7 461-0AA01-0AA0)

Function

The interface module pair IM 460-0 (send IM) and IM 461-0 (receive IM) are used for a local link.

Position of the operator controls and indicators of the IM 460-0 and IM 461-0

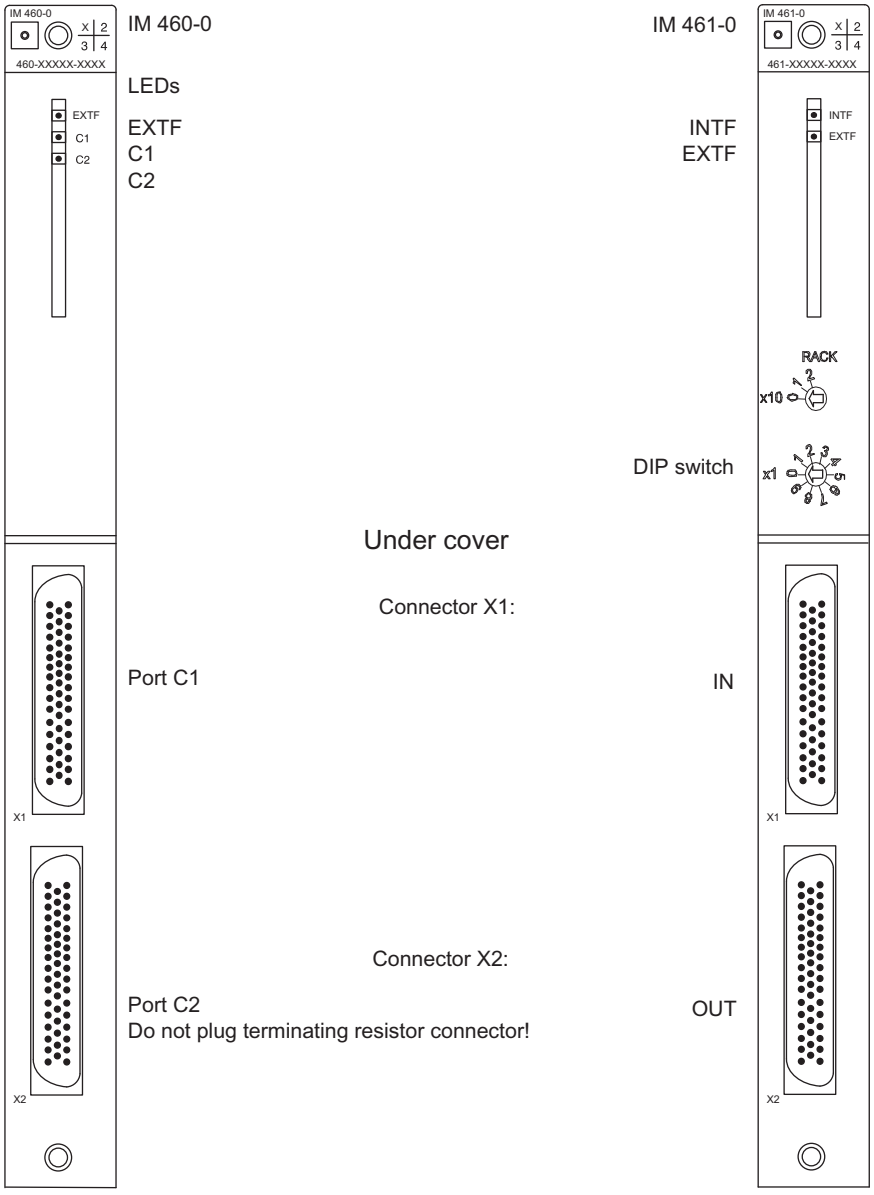

Figure 6-2 Position of the operator controls and indicators of the IM 460-0 and IM 461-0

Operator controls and indicators on the send IM

Table 6-6 Operator controls and indicators on the send IM

LEDs	Meaning
EXTF LED (red)	Lights up in the event of an external fault. Line 1 or line 2 is faulty (terminator missing or broken cable)
C1 LED (green)	Line 1 (via front connector X1, connection 1) is correct.
C1 LED (flashing green)	An EU in the line is not ready for operation because: • The power supply module is not switched on • A module has not yet completed the initialization process
C2 LED (green)	Line 2 (via front connector X2, connection 2) is correct.
C2 LED (flashing green)	An EU in the line is not ready for operation because: • The power supply module is not switched on • A module has not yet completed the initialization process
Front connectors X1 and X2	Connector (output) for line 1 and line 2 X1 = upper front connector; X2 = lower front connector

The LEDs EXTF, C1 and C2 do not light up if the terminator is not inserted or the line is interrupted when in POWER ON mode. In this case the IM 460 identifies an unoccupied interface.

Operator controls and indicators of the receive IM

Table 6-7 Operator controls and indicators of the receive IM

LEDs	Meaning
INTF LED (red)	Lights up if a rack number > 21 or = 0 was set. Lights up if you have changed the rack number under voltage.
EXTF LED (red)	Lights up in the event of an external fault (line fault, for example, if the terminator is not inserted or if a module has not yet completed the initialization process).
DIP switch	DIP switch to set the number of the mounting rack.
Front connector X1	Upper connector (input) for the cable from the previous interface module.
Front connector X2	Lower connector (output) for the cable to the next interface module or for the terminator.

Parameter assignment for the mounting rack number

Using the DIP switch on the front panel of the module, you must set the number of the mounting rack in which the receive IM is installed. The permitted range is 1 to 21.

Setting/changing the number

Proceed as follows:

1. Set the switch of the power supply module in the EU in which you want to make the change to the ⏻ position (Output voltage 0 V).
2. Enter the number using the DIP switch.
3. Switch the power supply module on again.

Specifications of the IM 460-0 and IM 461-0

Maximum line length (total)	5 m
Abmessungen B x H x T (mm)	25 x 290 x 280
Weight	
• IM 460-0 • IM 461-0	600 g 610 g
Current consumption from the S7-400 bus 5 VDC	
• IM 460-0	Typ. 130 mA Max. 140 mA
• IM 461-0	Typ. 260 mA Max. 290 mA
Power loss	
• IM 460-0	Typ. 650 mW Max. 700 mW
• IM 461-0	Typ. 1300 mW Max. 1450 mW
Terminator	6ES7461-0AA00-7AA0
Backup current	None

6.3 Interface modules IM 460-1 (6ES7460-1BA01-0AB0) and IM 461-1 (6ES7461-1BA01-0AA0)

Function

The interface module pair IM 460-1 (send IM) and IM 461-1 (receive IM) are used for a local link (up to a maximum 1.5 m in total). A 5 V supply voltage is also transferred with these interface modules. Please particularly remember the following points:

- The current requirements of the module plugged into the ER must not exceed 5 V/5 A.
- You can only connect one ER per line.
- The modules in this mounting rack are not supplied with 24 V and are not backed up.
- The communication bus is not transferred with the interface module pair IM 460-1 and IM 461-1.
- You must not use a power supply module in the ER.

Note

If you connect an ER via a local link with 5 V transmission, ungrounded operation is prescribed for the ER (see Installation Manual).

Position of the operator controls and indicators of the IM 460-1 and IM 461-1

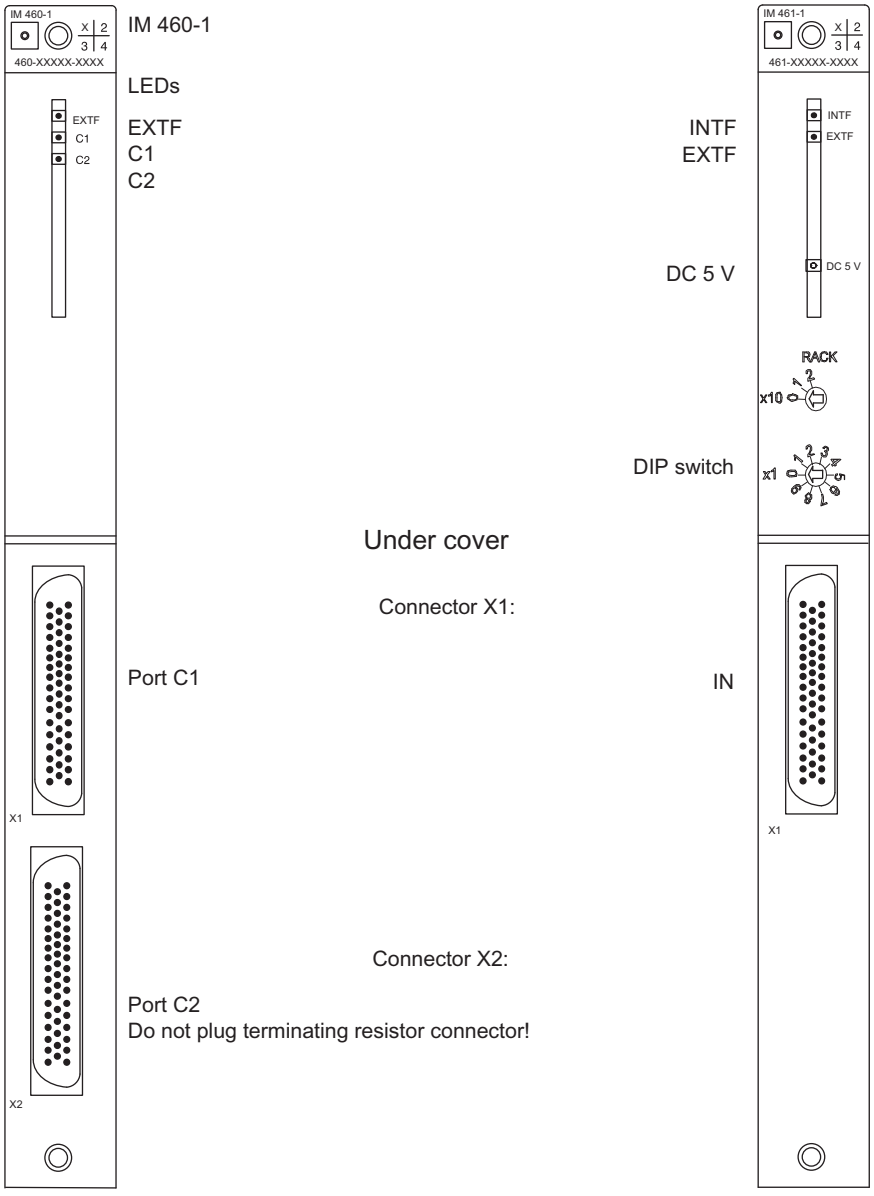

Figure 6-3 Position of the operator controls and indicators of the IM 460-1 and IM 461-1

Operator controls and indicators on the send IM

Table 6-8 Operator controls and indicators on the send IM

LEDs	Meaning
EXTF LED (red)	Lights up in the event of an external fault. Line 1 or line 2 is faulty (broken cable)
C1 LED (green)	Line 1 (via front connector X1, connection 1) is correct.
C1 LED (flashing green)	A module has not yet completed the initialization process.

LEDs	Meaning
C2 LED (green)	Line 2 (via front connector X2, connection 2) is correct.
C2 LED (flashing green)	A module has not yet completed the initialization process.
Front connectors X1 and X2	Connector (output) for line 1 and line 2 X1 = upper front connector; X2 = lower front connector

The LEDs EXTF, C1 and C2 do not light up if the line is interrupted when in POWER ON mode. In this case the IM 460 identifies an unoccupied interface.

Operator controls and indicators of the receive IM

Table 6-9 Operator controls and indicators of the receive IM

LEDs	Meaning
INTF LED (red)	Lights up if a rack number > 21 or = 0 was set. Lights up if you have changed the rack number under voltage.
EXTF LED (red)	Lights up in the event of an external fault (line fault, for example, if a module has not yet completed the initialization process but not when the CC is switched off)
5 VDC (green)	Power supply in the ER is correct.
DIP switch	DIP switch to set the number of the mounting rack.
Front connector X1	Upper connector (input) for the cable from the previous interface module.

CAUTION

Modules can be damaged.

If you want to connect an ER via the IM 461-1 interface module and use a power supply module in this ER, you might damage the modules.

Do not use a power supply module in an ER that you want to connect to the CR via the IM 461-1 interface module.

Parameter assignment for the mounting rack number

Using the DIP switch on the front panel of the module, you must set the number of the mounting rack in which the receive IM is installed. The permitted range is 1 to 21.

Setting/changing the number

Proceed as follows:

1. Set the power supply module in the CR to the ⏻ position (Output voltage 0 V).
2. Enter the number using the DIP switch.
3. Switch the power supply module on again.

Specifications of the IM 460-1 and IM 461-1

Maximum line length (total)	1.5 m
Dimensions W x H x D (mm)	25 x 290 x 280
Weight	
• IM 460-1 • IM 461-1	600 g 610 g
Current consumption from the S7-400 bus 5 VDC	
• IM 460-1 • IM 461-1	Typ. 50 mA, max. 85 mA Typ. 100 mA, max. 120 mA
Power loss	
• IM 460-1 • IM 461-1	Typ. 250 mW, max. 425 mW Typ. 500 mW, max. 600 mW
Power supply for ER	V/5 A per line
Backup current	None

6.4 Interface modules IM 460-3 (6ES7460-3AA01-0AB0) and IM 461-3 (6ES7461-3AA01-0AA0)

Function

The interface module pair IM 460-3 (send IM) and IM 461-3 (receive IM) are used for a remote link of up to a maximum 102.25 m (exactly: 100 m plus inputs/outputs of 0.75 m in the line).

Position of operator control and display elements

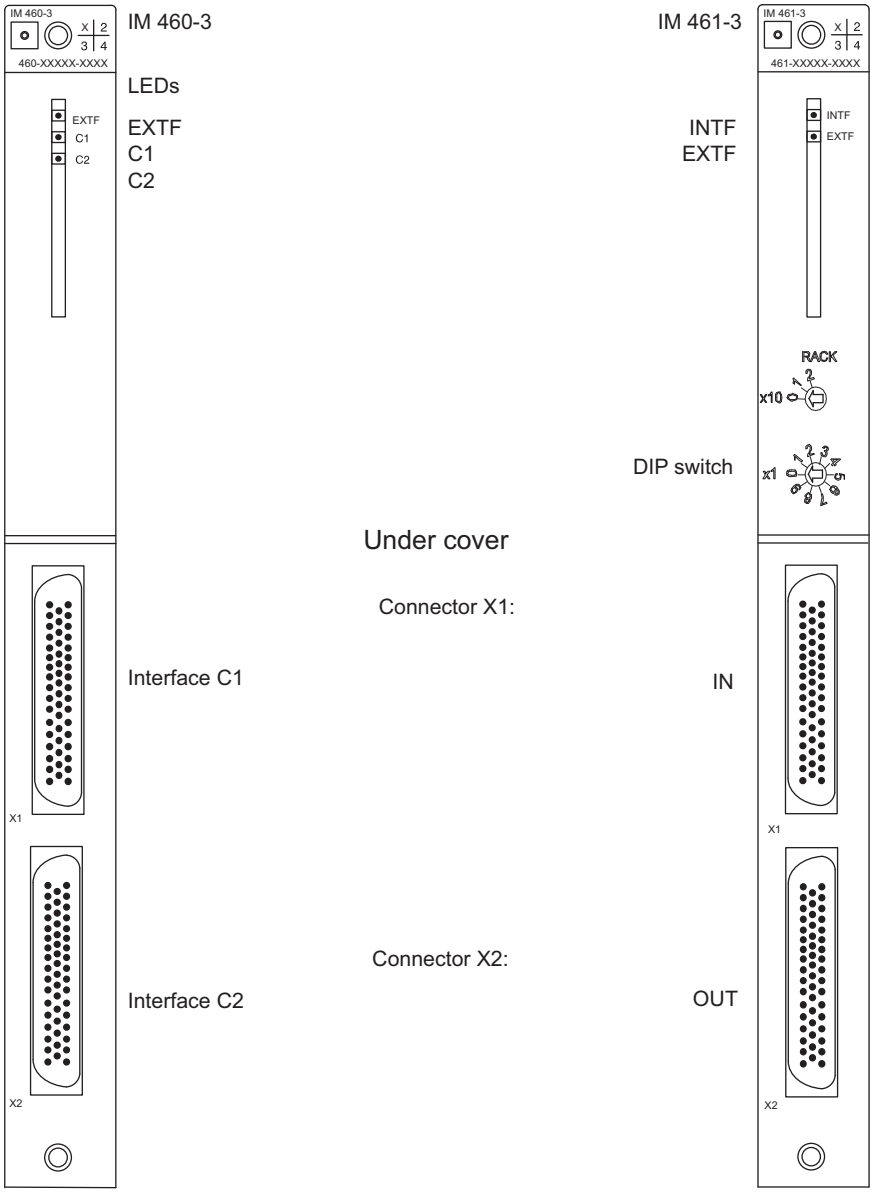

Figure 6-4 Position of the operator controls and indicators of the IM 460-3 and IM 461-3

Operator controls and indicators on the send IM

Table 6-10 Operator controls and indicators on the send IM

LEDs	Meaning
EXTF LED (red)	Lights up in the event of an external fault. Strand 1 or strand 2 fault (cable break)
C1 LED (green)	Line 1 (via front connector X1, connection 1) is correct.
C1 LED (flashing green)	An EU in the line is not ready for operation because: • The power supply module is not switched on • A module has not yet completed the initialization process
C2 LED (green)	Line 2 (via front connector X2, connection 2) is correct.
C2 LED (flashing green)	An EU in the line is not ready for operation because: • The power supply module is not switched on • A module has not yet completed the initialization process

The LEDs EXTF, C1 and C2 do not light up if the terminator is not inserted or the line is interrupted when in POWER ON mode. In this case the IM 460 identifies an unoccupied interface.

Operator controls and indicators of the receive IM

Table 6-11 Operator controls and indicators of the receive IM

LEDs	Meaning
INTF LED (red)	Lights up if a rack number > 21 or = 0 was set. Lights up if you have changed the rack number under voltage.
EXTF LED (red)	Lights up in the event of an external fault (line fault, for example, if the terminator is not inserted or if a module has not yet completed the initialization process, or if the CC is switched off)
DIP switch	DIP switch to set the number of the mounting rack.
Front connector X1	Upper connector (input) for the cable from the previous interface module.
Front connector X2	Lower connector (output) for the cable to the next interface module or for the terminator.

Parameter assignment

Using the DIP switch on the front panel of the module, you must set the number of the mounting rack in which the receive IM is installed. The permitted range is 1 to 21.

If required, you can change the distance setting for the line on the programming device using STEP 7.

The default setting for the distance is 100 m.

Ensure that the distance corresponds as closely as possible to the current length (the sum of all the cables per line) as this will accelerate data transmission.

Note

The distance set must always be longer than the actual length of cable per line.

Setting/changing the number

Proceed as follows:

1. Set the switch of the power supply module in the EU in which you want to make the change to the ⏻ position (Output voltage 0 V).
2. Enter the number using the DIP switch.
3. Switch the power supply module on again.

Specifications of the IM 460-3 and IM 461-3

Maximum line length (total)	102.25 m
Abmessungen B x H x T (mm)	25 x 290 x 280
Weight	
• IM 460-3	630 g
• IM 461-3	620 g
Current consumption from the S7-400 bus 5 VDC	
• IM 460-3	Typ. 1350 mA Max. 1550 mA
• IM 461-3	Typ. 590 mA Max. 620 mA
Power loss	
• IM 460-3	Typ. 6750 mW Max. 7750 mW
• IM 461-3	Typ. 2950 mW Max. 3100 mW
Terminator	6ES7461-3AA00-7AA0
Backup current	None

6.5 Interface modules IM 460-4; (6ES7460-4AA01-0AB0) and IM 461-4; (6ES7461-4AA01-0AA0)

Function

The interface module pair IM 460-4 (send IM) and IM 461-4 (receive IM) are used for a remote link of up to a maximum 605 m (exactly: 600 m plus inputs/outputs of 1.5 m in the line).

Position of the operator controls and indicators of the IM 460-4 and IM 461-4

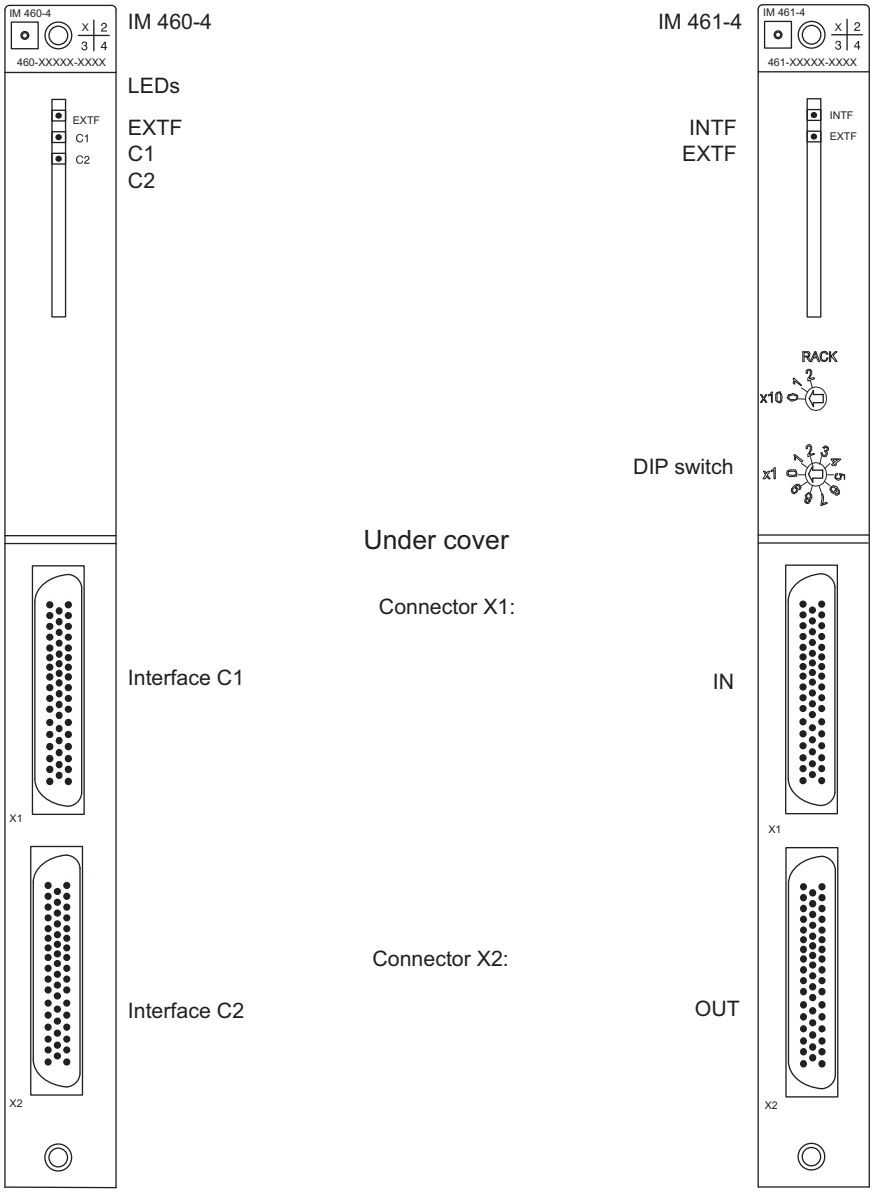

Figure 6-5 Position of the operator controls and indicators of the IM 460-4 and IM 461-4

Operator controls and indicators on the send IM

Table 6-12 Operator controls and indicators on the send IM

LEDs	Meaning
EXTF LED (red)	Lights up in the event of an external fault. Line 1 or line 2 is faulty (terminator missing or broken cable)
C1 LED (green)	Line 1 (via front connector X1, connection 1) is correct.
C1 LED (flashing green)	An EU in the line is not ready for operation because: • The power supply module is not switched on • A module has not yet completed the initialization process
C2 LED (green)	Line 2 (via front connector X2, connection 2) is correct.
C2 LED (flashing green)	An EU in the line is not ready for operation because: • The power supply module is not switched on • A module has not yet completed the initialization process

The LEDs EXTF, C1 and C2 do not light up if the terminator is not inserted or the line is interrupted when in POWER ON mode. In this case the IM 460 identifies an unoccupied interface.

Operator controls and indicators of the receive IM

Table 6-13 Operator controls and indicators of the receive IM

LEDs	Meaning
INTF LED (red)	Lights up if a rack number > 21 or = 0 was set. Lights up if you have changed the rack number under voltage.
EXTF LED (red)	Lights up in the event of an external fault (line fault, for example, if the terminator is not inserted or if a module has not yet completed the initialization process, or if the CC is switched off)
DIP switch	DIP switch to set the number of the mounting rack.
Front connector X1	Upper connector (input) for the cable from the previous interface module.
Front connector X2	Lower connector (output) for the cable to the next interface module or for the terminator.

Parameter assignment

Using the DIP switch on the front panel of the module, you must set the number of the mounting rack in which the receive IM is installed. The permitted range is 1 to 21.

If required, you can change the distance setting for the line on the programming device using STEP 7.

The default setting for the distance is 600 m.

Ensure that the distance corresponds as closely as possible to the current length (the sum of all the cables per line) as this will accelerate data transmission.

Note

The distance set must always be longer than the actual length of cable per line.

Setting/changing the number

Proceed as follows:

1. Set the switch of the power supply module in the EU in which you want to make the change to the ⏻ position (Output voltage 0 V).
2. Enter the number using the DIP switch.
3. Switch the power supply module on again.

Specifications of the IM 460-4 and IM 461-4

Maximum line length (total)	605 m
Dimensions W x H x D (mm)	25 x 290 x 280
Weight	
• IM 460-4	630 g
• IM 461-4	620 g
Current consumption from the S7-400 bus 5 VDC	
• IM 460-4	Typ. 1350 mA Max. 1550 mA
• IM 461-4	Typ. 590 mA Max. 620 mA
Power loss	
• IM 460-4	Typ. 6750 mW Max. 7750 mW
• IM 461-4	Typ. 2950 mW Max. 3100 mW
Terminator	6ES7461-4AA00-7AA0
Backup current	None

Compatibility

You cannot use the IM 460-4 and IM 461-4 interface modules with CPUs that have the following order numbers:

- 6ES7412-1XF00-0AB0
- 6ES7413-1XG00-0AB0
- 6ES7413-2XG00-0AB0
- 6ES7414-1XG00-0AB0

- 6ES7414-2XG00-0AB0
- 6ES7416-1XJ00-0AB0

S5 interface IM 463-2

7

7.1 Using SIMATIC S5 expansion units in an S7-400

Order number

6ES7463-2AA00-0AA0

Area of application

The IM 463-2 interface module is used for distributed connection of S5 expansion units to an S7-400. You can use the IM 463-2 in the CR of the S7-400. You can use an IM 314 in the S5 expansion unit.

This allows you to connect the following S5 expansion units to an S7-400:

- EG 183U with IM 314 in slot 3
- EG 185U with IM 314 in slot 3
- EG 186U with IM 314 in slot 3
- ER 701-2 with IM 314 in slot 7
- ER 701-3 with IM 314 in slot 7

Accordingly, you can use all digital and analog I/O modules suitable for these EUs or ERs.

Basic requirement

If you connect an S5 expansion unit to a CR of the S7-400 via an IM 463-2, the SIMATIC S5 basic requirements concerning EMC, ambient conditions, etc., apply for the overall system.

Note

In environments contaminated by radiated noise, you must apply the type 721 cable shield (see *Installation manual*).

Mounting and removing the FM 463-2

Please read the following warning on the mounting and removal of the IM 463-2 and associated cables.

CAUTION

Data may be lost or corrupted.

Removing or inserting the IM 463-2 and/or their associated cables under voltage can result in the loss or corruption of data.

Switch off the power supply modules to the central rack you are working on before you carry out any changes.

Expanding the distributed connection

You can also centrally expand the EUs connected in a distributed configuration via an IM 463-2. The following table lists the S5 interface modules that you can use for this purpose.

Table 7-1 S5 interface modules

Module	Order number
IM 300	6ES5 300-5CA11 6ES5 300-3AB11 6ES5 300-5LB11
IM 306	6ES5306-7LA11

7.2 Rules for connecting S5 expansion units

Introduction

When you connect S5 expansion units to an S7-400 via the IM 463-2, there are rules to observe with regard to cable length, maximum expansion, use of a terminating connector and permissible potential differences.

Cable length

The maximum cable length per IM 463-2 from the CR of the S7-400 to the last S5 expansion unit is 600 m. You set the actual cable length at the IM 463-2.

Maximum configuration

You can use up to four IM 463-2s in one S7-400 CR.

At each IM 463-2 interface (C1 and C2), you can connect up to four S5 expansion units in a distributed configuration.

You can connect further EUs centrally to the EUs connected in the distributed configuration.

Addressing of the S5 modules

All S5 address areas are available (P, Q, IM3, IM4)

Note

Note that every S5 address can only be used once, even **across different lines**.

Terminator

You must terminate the IM 314 of the last EU in each line with the 6ES5760-1AA11 terminating connector.

Permissible potential differences

For the safe functioning of the distributed configuration, you must ensure that the potential difference between two devices is not more than 7 V. Use an equipotential bonding conductor.

See also

Operator controls and indicators (Page 342)

7.3 Operator controls and indicators

Introduction

All controls and indicators on the IM 463-2 are arranged on the front plate. The following figure shows the arrangement of the controls and indicators.

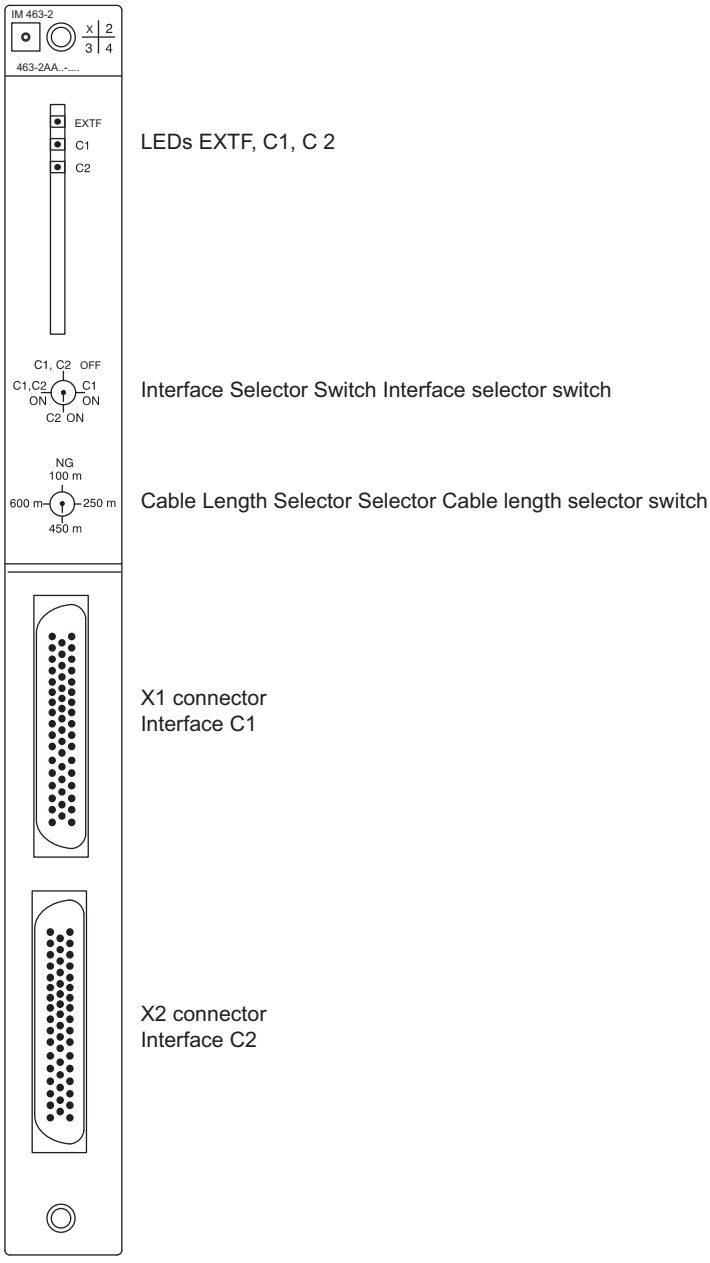

Figure 7-1 Layout of the controls and indicators of the IM 463-2

LEDs

Table 7-2 LEDs of the IM 463-2

LED	Meaning
EXTF LED (red)	Lights up in the event of an external fault. Line 1 or line 2 has a fault (power supply failed in the EU; terminating connector missing; wire break, or interface selector switch wrongly set).
C1 LED (green)	Line 1 (via front connector X1, connection 1) is correct.
C2 LED (green)	Line 2 (via front connector X2, connection 2) is correct.
Front connectors X1 and X2	Connector (output) for line 1 and line 2 X1 = upper front connector; X2 = lower front connector

Interface selector switch

Table 7-3 Switch position: Interface selector of the IM 463-2

Switch setting	Meaning
C1 ON	You use only interface C1.
C2 ON	You use only interface C2.
C1, C2 ON	You use both interfaces.
C1, C2 OFF	You use neither of the two interfaces. You do not want to operate an S5 EU at present.

Cable length selector switch

Table 7-4 Switch position: Cable length selector of the IM 463-2

Switch setting	Meaning
100	Cable length 1 to 100 m
250	Cable length 100 to 250 m
450	Cable length 250 to 450 m
600	Cable length 450 to 600 m

WARNING

Danger of data loss.

Changing the setting of the interface selector switch and the cable length selector switch in RUN mode can result in loss of data.

Change the settings of these switches only in STOP mode of the CPU.

7.4 Installing and connecting the IM 463-2

Overview

To install an IM 463-2 in a CR of the S7-400, proceed in the same way as when installing other S7-400 modules (see *Installation manual*).

To connect an IM 463-2, follow the steps outlined below:

1. Prepare the cable
2. Plug in the cable
3. Select the interface
4. Select the cable length

Prepare the cable

You can use the cable 721. However, you must change the connector housing on the connection side of the IM 463-2.

Two connector housings are enclosed with every IM 463-2. You can prepare a cable for an IM 463-2 using one of these connector housings and a 721 cable (see *Catalog ST 54.1*). Proceed as follows:

1. Remove one connector housing on the 721 cable.
2. Open one of the connector housings enclosed with the IM 463-2.
3. Attach this connector housing to the 721 cable.
4. Close the connector housing.

Plug in the cable

To plug in the cable, follow the steps outlined below:

1. Open the cover of the IM 463-2.
2. Plug the new connector of the cable into one of the connectors of the IM 463-2.
   Interface C1 corresponds to the upper connector;
   Interface C2 corresponds to the lower connector.
3. Screw the connector of the cable onto the connector of the IM 463-2.
4. Close the cover.

Select the interface

You select the interface with the selector switch on the front plate. Set the interface(s) here that you want to use. Make the settings on the IM 463-2 only when the CPU is in STOP mode.

Select the cable length

You select the cable length with the selector switch on the front plate. Set the range corresponding to the line length. Make the settings on the IM 463-2 only when the CPU is in STOP mode.

7.5 Setting the operating modes of the IM 314

Introduction

To operate the IM 463-2, you must set on the IM 314 the S5 expansion unit used and the address area of the S5 I/O modules.

Setting the S5 expansion unit

You set the S5 expansion unit in which you want to use the IM 314 using jumpers BR1, BR2, and BR3 on the IM 314. The following figure shows where these jumpers are located on the IM 314 and which setting corresponds to which expansion unit.

Table 7-5 Settings of the IM 314 using expansion units

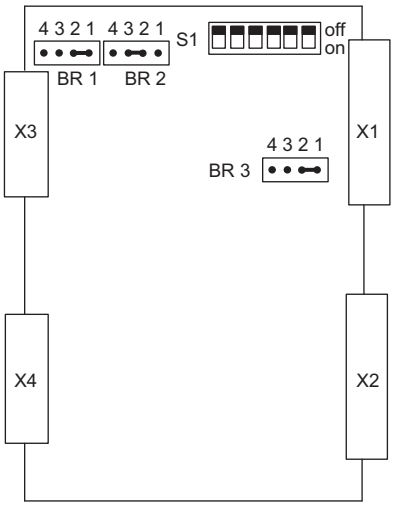	Used in EU 185U, EU 186U
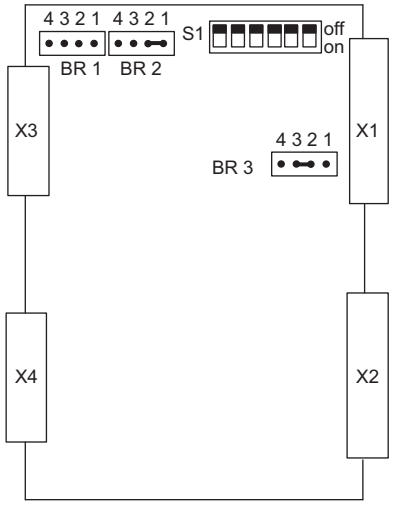	Used in EU 183 U

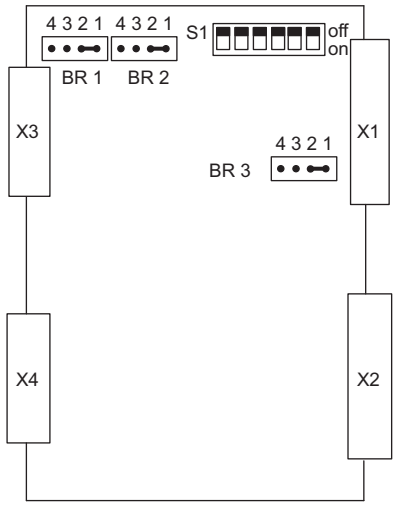	Used in ER 701-2, ER 701-3

Setting the address area

The address area of the S5 I/O modules is set on the IM 314. This setting applies only for the digital and analog I/O modules.

The address areas P, Q, IM3, and IM4 are available. Set the switch to the relevant position to address the digital and analog I/O modules in these areas.

Table 7-6 Settings address areas on the IM 314

I/O area address	Switch position		
	O = OFF, 1 = ON		The first two switches on the left are not relevant.
P area: F000 - F0FF	S1:	0000 *	
Q area: F100 - F1FF		0001	
IM3 area: FC00 - FCFF		1100	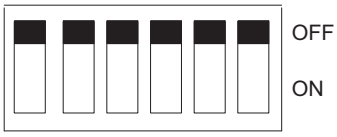
IM4 area: FD00 - FDFF		1101	
* Factory state			

7.6 Configuring S5 modules for operation in the S7-400

Example

You program S5 modules in *STEP 7*. Refer to the description in the *STEP 7* manual or the *online help* to learn how this is done.

The following figure shows a possible connection of CRs and EUs via the IM 463-2 and IM 314.

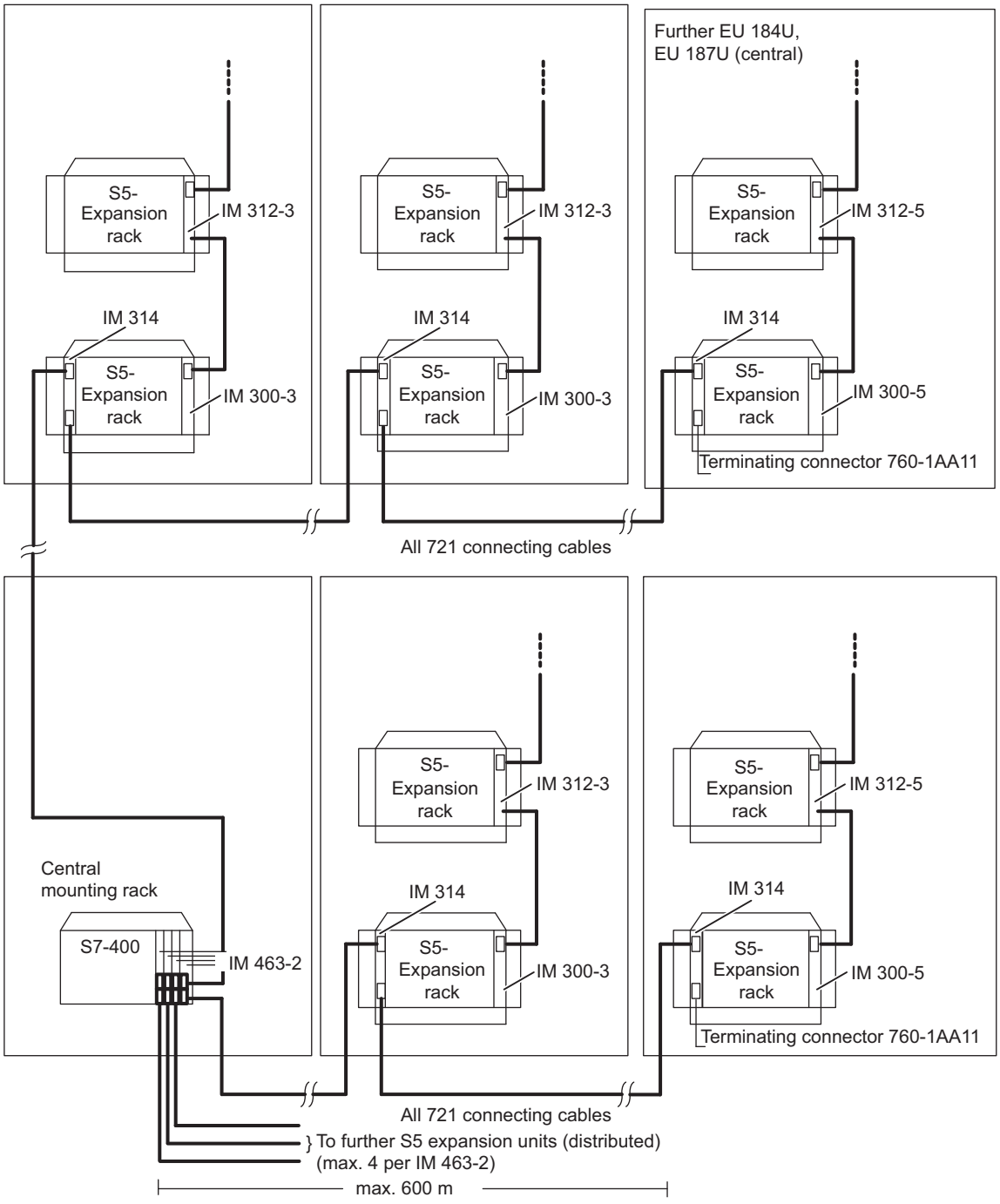

Figure 7-2 Connection variant for CCs and EUs via the IM 463-2 and IM 314

7.7 Pin assignments of the 721 cable

Pin assignments of the 721 cable

Table 7-7 Pin assignments of the 721 cable

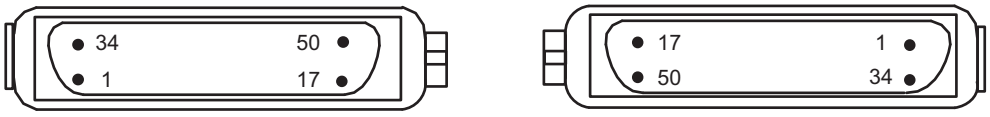

Connector		Bundle ID sheath	Identification foil	Core color	Connector	
50-pin	Contact				50-pin	Contact
20		1 No. 16	Red	white	20	
21				brown	21	
4				green	4	
5				yellow	5	
18				gray	18	
19				pink	19	
2				blue	2	
3				red	3	
24		2 No. 17	green	white	24	
25				brown	25	
8				green	8	
9				yellow	9	
22				gray	22	
23				pink	23	
6				blue	6	
7				red	7	
26		3 No. 18	yellow	white	26	
27				brown	27	
10				green	10	
11				yellow	11	
42				gray	42	
43				pink	43	
44				blue	44	
45				red	45	
28		4 No. 19	brown	white	28	
29				brown	29	
12				green	12	
13				yellow	13	
46				gray	46	
47				pink	47	
30				blue	30	
31				red	31	

34	5 No. 20	black	white	34
35			brown	35
36			green	36
37			yellow	37
38			gray	38
39			pink	39
40			blue	40
41			red	41
48	6 No. 21	blue	white	48
49			brown	49
14			green	14
15			yellow	15
32			gray	32
33			pink	33
-	Shield			-

7.8 Terminating connector for IM 314

Introduction

The IM 314 of the last expansion unit of each line is terminated with the 6ES5 760-1AA11 terminating connector.

Table 7-8 Assignment of the terminator 760-1AA11

Assignment of the terminator 760-1AA11			
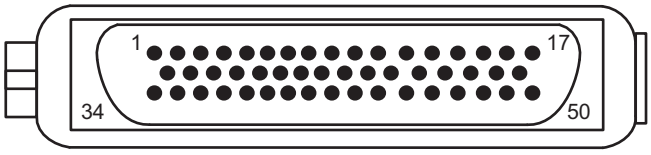			
Plug connection	**180-Ohm resistance or jumper**		**Plug connection**
28			8
29			9
26			6
27			7
46			4
47			5
44			2
45			3
42			24
43			25
38	[1]		22
39			23
34	[1]		20
35			21
36	[1]		18
37			19

Assignment of the terminator 760-1AA11			
40	[1]		12
41			13
48	[2]		10
49			11
15			30
16			31
14			
50			

[1] 100 Ω
[2] 200Ω

7.9 Specifications IM463-2 (6ES7463-2AA00-0AA0)

Specifications

Programming package	
Associated programming package	As of STEP 7 V 2.1
Dimensions and weight	
Dimensions W x H x D (mm)	25x290x280
Weight	360 g
Module-specific data	
Number and type of interfaces	2 parallel, 2 symmetrical interfaces
Cable length: from IM 463-2 to the last IM 314 (per interface)	Max. 600 m
Transmission speed	2 Mbps to 100 Kbps
Parameter sets of the signal modules	Differential signal in accordance with RS 485
Front connectors	2 connectors, 50-pin male
Voltages, currents, electrical potentials	
Supply voltage from S7-400 bus	+5 V
Current consumption	Typ. 1.2 A Max. 1.32 A
Power loss	Typ. 6 W Max. 6.6 W
Backup current	No

PROFIBUS DP master interface IM 467/IM 467 FO 8

8.1 PROFIBUS DP master interface IM 467/IM 467 FO

8.1.1 Overview

Order numbers

IM 467	6ES7467-5GJ02-0AB0 (RS 485)
IM 467 FO	6ES7467-5FJ00-0AB0 (F0)

Application

PROFIBUS DP, standardized in accordance with IEC 61784-1:2002 Ed1 CP 3/1, enables rapid communication in the field between programmable controllers, PCs and field devices. Field devices are devices such as: ET 200 distributed I/O devices, drives, valve terminals, switchgear and many others.

The IM 467/IM 467 FO interface module is meant to be used in an S7-400 programmable controller. It permits the S7-400 to be connected to PROFIBUS DP.

Note

The PROFIBUS DP master interface IM 467 and IM 467 FO is not a DP master in accordance with DVP 1.

Design

- Designed for S7-400
- Can be operated without a fan
- A maximum of 4 IM 467/IM 467 FO can be used in the central rack. There are no slot rules.
- The IM 467/IM 467 FO and the CP 443-5 Extended cannot be used together.
- The transmission rate of 9.6 Kbps to 12 Mbps can be set in steps using software
- Configuration and programming are possible via PROFIBUS DP. You should **not**, however, change the PROFIBUS DP parameters.

- IM 467 with 9-pin sub D socket for connection to PROFIBUS DP (6ES7467-5GJ02-0AB0)
- IM 467 FO with fiber-optic cable for connection to PROFIBUS DP (6ES7467-5FJ00-0AB0)

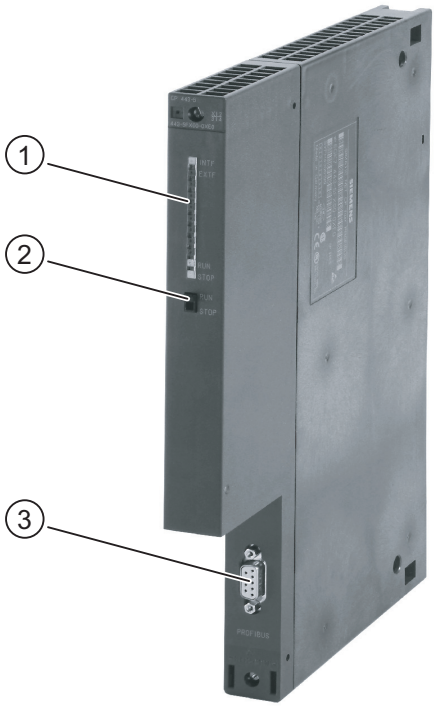

Figure 8-1 Configuration of the IM 467/467 FO

(1) LED
(2) Mode selector
(3) PROFIBUS-DP interface
9-pin sub D

Communication services

The IM 467/IM 467 FO offers two communication services:

- PROFIBUS DP
  The IM 467/IM 467 FO is a PROFIBUS DP master in accordance with EN 50 170. It is configured entirely with STEP 7. It behaves in basically the same way as the integrated PROFIBUS DP interfaces on the CPU modules (see the specifications of the IM 467/IM 467 FO for the differences).
  DP communication does not require any function calls in the STEP 7 user program.
- S7 functions
  The S7 functions guarantee optimal and easy communication in a SIMATIC S7/M7/C7 automation solution. The following S7 functions are enabled for the IM 467/IM 467 FO:
  - Programming device functions via PROFIBUS DP
  - Operator control and monitoring functions via PROFIBUS DP

  Communication takes place without any additional configuration on the IM 467/IM 467 FO. S7 functions can be used on their own or in parallel with the PROFIBUS DP protocol. If they are used in parallel with DP communication, this affects the PROFIBUS DP bus cycle time.

8.1.2 Indicators and the mode selector

LED

The LED strip on the front panel of the IM 467/IM 467 FO has the following four indicators:

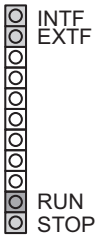

Figure 8-2 LEDs of the IM 467/467 FO

IM operating mode

The LEDs indicate the operating mode of the IM in accordance with the following table:

Table 8-1 Operating modes of the IM 467/467 FO

STOP LED (yellow)	RUN LED (green)	EXTF LED (red)	INTF LED (red)	CP Operating Mode
On	Flashing	Off	Off	Startup
Off	On	Off	Off	RUN
Flashing	On	Off	Off	STOPPING
On	Off	Off	Off	STOP
On	Off	Off	On	STOP with internal error (IM not configured, for example)
Flashing	Off	Off	Off	Waiting for FW update (takes 10 sec. after power up)
Flashing	Off	On	On	Waiting for FW update (IM currently contains an incomplete FW version).
Off	On	On	Off	RUN and PROFIBUS DP bus fault
Off	On	Flashing	Off	RUN; but there are faults on the DP line (the DP slave is not taking part in data transfer, or the module in the DP slave is faulty, for example)
Flashing	Flashing	Flashing	Flashing	Module error / system error

Controlling the operating status

There are two ways to control the operating status of the IM 467/IM 467 FO:

- Mode selector
- By using the programming device/PC

Mode selector

You can switch operating modes as follows using the mode selector:

- From STOP to RUN
  All the configured communication services and S7 communication services are available in RUN.
  The IM operating mode can only be controlled from the programming device/PC when the switch is in the RUN position.
- From RUN to STOP
  The IM goes into STOP mode. Any existing S7 connections are cleared down, and the DP slaves are no longer supplied.

Loadable firmware

The IM 467/IM 467 FO supports the updating of firmware (FW) by means of the FW loader. The FW loader is a component of the NCM S7 configuration software for PROFIBUS DP. Authorization is not required for this. After a FW update, the central rack must be switched off and on again before normal operation can be resumed.

Note

You can find additional information on loading firmware in the *NCM S7 for PROFIBUS-DP* manual and in the readme file of the *NCM S7 for PROFIBUS-DP* configuration software.

An optical bus terminal (OBT) is required to load FW in the IM 467 FO.

8.2 Configuration

Introduction

The IM 467/IM 467 FO is configured with STEP 7. The configuration data are retained even in the event of a power failure; a memory module is not required. Using the S7 functions it is possible to program and configure remotely all the IM 467/IM 467 FO connected to the network and all the CPUs connected via the SIMATIC S7-400 backplane bus.

SIMATIC STEP 7, version 5.00 or higher is required.

Module replacement without a programming device

The configuration data are stored in the load memory of the CPU. The non-volatile storage of configuration data in the CPU is ensured by battery backup or EPROM module cards.

The IM 467/IM 467 FO can be replaced without the need to explicitly reload the configuration data.

It is only possible to remove and insert the IM 467/IM 467 FO in a de-energized state.

Multiprocessor operation

The connected DP slaves can only be assigned to and processed by one CPU.

Configuration and diagnostics cannot be carried out simultaneously

When configuration is in progress, the IM 467/IM 467 FO cannot be diagnosed at the same time via MPI.

Note

The transmission rates 3 Mbit/s and 6 Mbit/s are not approved for IM467-FO.

8.3 Connection to PROFIBUS DP

8.3.1 Connection options

Overview

There are two ways of connecting to PROFIBUS DP:

- Electrical connection via a bus connector
- Optical connection using a fiber-optic cable

8.3.2 Bus connector

Wiring

Only with 6ES7467-5GJ02-0AB0.

The bus cable is connected to the IM 467 by means of this connector. (See the detailed description in the section on networking in the *S7-400, Hardware and Installation manual*.)

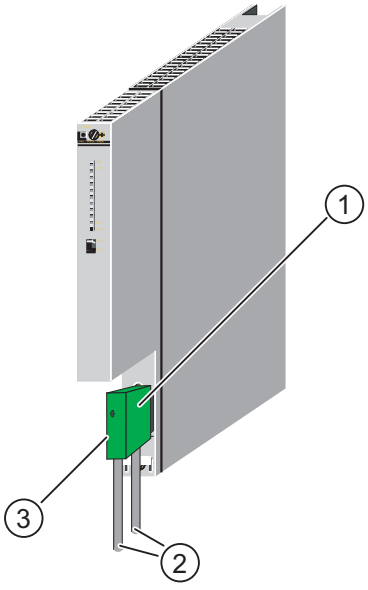

Figure 8-3 Connecting the bus connector to the IM 467

(1) Switch for bus terminator resistor

(2) PROFIBUS_DP bus line

(3) Bus connector

Maximum cable lengths for PROFIBUS DP

Transmission speed in Kbps	9,6	19,2	93,75	187,5	500	1500	3000	6000	12000
Max. length of a bus segment in m	1.000	1.000	1.000	1.000	400	200	100	100	100
Max. number of bus segments 1	10	10	10	10	10	10	10	10	10
Max. length in m	10.000	10.000	10.000	10.000	4.000	2.000	1.000	1.000	1.000
[1] Bus segments are interconnected with RS 485 repeaters									

Connector pin assignment

The electrical interface used to connect to PROFIBUS DP (9-pin sub D socket) is specified in the following table.

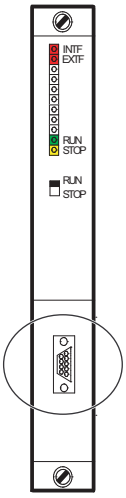

Pin no.	Signal name	Profibus designation	Assigned to RS 485
1	PE	Protective earth	Yes
2		-	-
3	RxD/TxD-P	Data transfer line B	Yes
4	RTS (AG)	Control A	-
5	M5V2	Data reference potential	Yes
6	P5V2	Supply plus	Yes
7	BATT	-	-
8	RxDT/TxD-N	Data transfer line A	Yes
9	-	-	-

8.3.3 Optical connection to PROFIBUS DP

Wiring

Only in the case of 6ES7467-5FJ00-0AB0.

The IM 467 F0 with an integrated fiber-optic cable interface is available for connecting to the optical version of PROFIBUS DP.

Figure 8-4 Optical connection to PROFIBUS DP

(1) PROFIBUS DP bus cable

8.3.4 Connecting a fiber-optic cable to the IM 467 FO

Required accessories

- Package with simplex connectors and polishing sets (6GK1901-0FB00-0AA0)
- Pack of plug-in adapters (6ES7195-1BE00-0XA0)

Installing connectors

1. Remove approximately 30 cm of the sheath of the fiber-optic duplex cable.
2. Install the fiber-optic duplex cable with the associated simplex connectors. You can find a detailed description of simplex connectors in the *SIMATIC NET PROFIBUS Networks* manual.
   TIP: Close the two simplex connectors together rather than separately to obtain a duplex connector. In this manner you will achieve a better hold in the plug adapter.
   IMPORTANT: The polished surface of the plastic fibers must be absolutely smooth and even. Likewise, the plastic jacket must not protrude or be cut unevenly. Every irregularity causes strong attenuation of the light signal over the fiber-optic cable!
3. Place the simplex connectors in the plug-in adapter for the IM 467 FO and the fiber-optic cable in the cable guides provided. Insert the plug-in adapter until you hear the sides clearly latch into position.
   Make sure when you insert the plugs in the plug-in adapter that the transmitter is always at the top and the receiver is underneath.

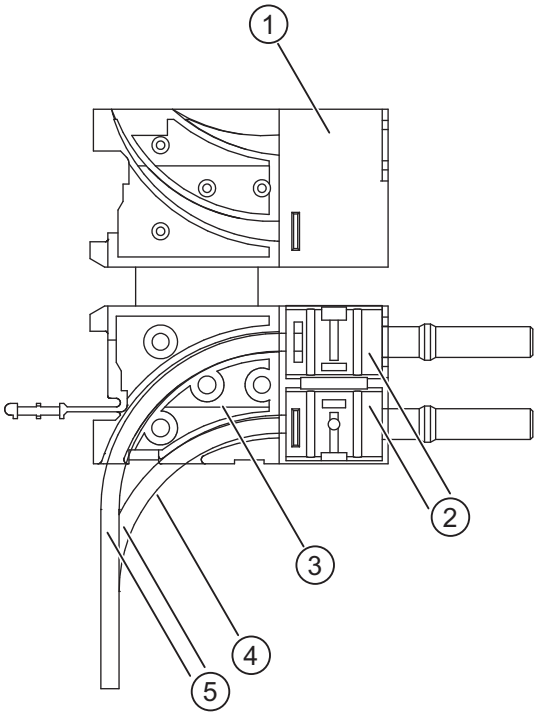

Figure 8-5 Installing the connector

(1) Plug-in adapter for the IM 467 FO

(2) Snap the two simplex connectors closed together such that you get a "duplex connector".

(3) **Tip**: Cut the lower cable approx. 10 mm shorter than the upper one to achieve better cable routing in the cable duct of the IM 467 FO.

(4) Max. 30 mm bending radius

(5) Fiber-optic duplex cable

Reusing fiber-optic cable

Note

If you insert previously used fiber-optic cable into the plug adapter, you must shorten both fiber-optic cores by the amount of the curved lengths and reinstall the simplex connectors.

This will prevent any attenuation losses caused by repeatedly bent, heavily stressed portions of the fiber-optic duplex core.

Inserting the fiber-optic cables into the IM 467 FO

Insert the fiber-optic cable with the mounted plug adapters into the IM 467 FO. Fold the protruding plug grip upward.

Make sure that it is correctly positioned: The transmitter fiber-optic cable is plugged into the receiver socket, and the receiver fiber-optic cable is inserted into the transmitter socket of the fiber-optic interface of the IM 467 FO.

If the IM 467 FO is the last node in the fiber-optic network, you must close the unoccupied fiber-optic cable interface with blanking plugs (the plugs are already in place when the IM 467 FO is delivered).

CAUTION

Do not look directly into the opening of the optical sender diodes.

The emitted light beam could damage your eyes.

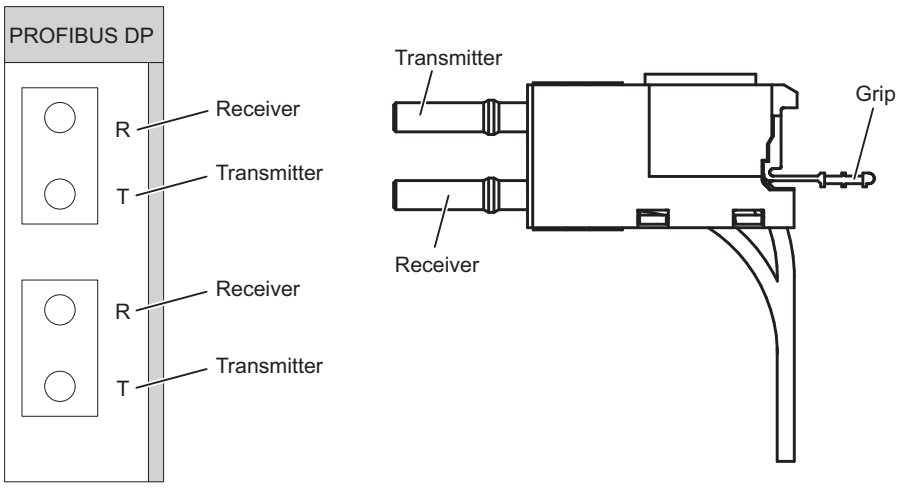

Figure 8-6 Inserting the fiber-optic cables into the IM 467 FO

Bending radius for the fiber-optic cable

When placing the fiber-optic duplex core into the plug adapter and routing the cable, be sure not to exceed the permissible bending radius of 30 mm. See also the installation guidelines on fiber-optic cables in the SIMATIC NET PROFIBUS Networks manual.

8.4 Specifications

8.4.1 Specifications of the IM 467 (6ES7467-5GJ02-0AB0))

Dimensions and weight	
Dimensions W x H x D (mm) Weight	25 x 290 x 210 700 g
PROFIBUS DP	
• Standard	PROFIBUS DP, EN 50 170
• Transmission rate	9.6 Kbps to 12 Mbps, configurable in steps
• Transmission technology	RS 485 via 9-pin sub D socket
Current consumption	
Current consumption from the S7-400 bus (24 VDC) The IM does not consume any current at 24 V, and it only makes this voltage available at the MPI/DP interface.	Total current consumption of the components connected to the DP interfaces, with a maximum of 150 mA
PROFIBUS DP	
Operating conditions	
Can be used in	SIMATIC S7-400, max. 4 IM 467 in the central rack
IM 467 cannot be used with the CP 443-5	
Supply voltage	5 VDC via the backplane bus
Current consumption	
• From 5 VDC	1.3 A
Addressing range	Max. 4 KB for inputs and 4 KB for outputs
DP master	Yes
• DPV 1	No
• Enable/disable	No
Number of connectable I/O devices (slaves)	96
Number of connections for S7 functions for the programming device and operator control and monitoring	32 + 1 diagnostic connection
Data volume per slave	Max. 244 bytes

Consistency	Max. 128 bytes
Configuration software	STEP 7
DP slave	No
Deviations from the DP interface integrated in the CPU	
• Different SSL IDs for system diagnostics • Possibly extended SFC run times • Additional return codes for SFC 14 and SFC 15	

8.4.2 Specifications of the IM 467 FO (6ES7467-5FJ00-0AB0)

Dimensions and weight	
Dimensions W x H x D (mm) Weight	25 x 290 x 210 700 g
PROFIBUS DP	
• Standard	PROFIBUS DP, EN 50 170
• Transmission rate	9.6 Kbps to 12 Mbps, configurable in steps (3 Mbps and 6 Mbps not possible)
• Transmission technology	FOC; Wave length l = 660 nm 2 x duplex sockets
Current consumption	
Current consumption from the S7-400 bus (24 VDC) The IM does not consume any current at 24 V, and it only makes this voltage available at the MPI/DP interface.	Total current consumption of the components connected to the DP interfaces, with a maximum of 150 mA
PROFIBUS DP	
Operating conditions	
Can be used in	SIMATIC S7-400, max. 4 IM 467 in the central rack
IM 467 cannot be used with the CP 443-5	
Supply voltage	5 VDC via the backplane bus
Current consumption	1.3 A
• From 5 VDC	
Addressing range	Max. 4 KB for inputs and 4 KB for outputs
DP master	Yes
• DPV 1	No
• Enable/disable	No
Number of connectable I/O devices (slaves)	96
Number of connections for S7 functions for the programming device and operator control and monitoring	32 + 1 diagnostic connection
Data volume per slave	Max. 244 bytes
Consistency	Max. 128 bytes
Configuration software	STEP 7
DP slave	No
Deviations from the DP interface integrated in the CPU	
• Different SSL IDs for system diagnostics • Possibly extended SFC run times • Additional return codes for SFC 14 and SFC 15	

Cable duct and fan subassemblies

9

9.1 Features

Overview

The cable duct and the fan subassembly have the following characteristics

- The air inflow area is variable.
- Shield and cable clamping are possible.

In addition, the fan subassembly has the following characteristics:

- Fans and filter frames can be replaced from the front during operation.
- The fan function is controlled by means of speed monitoring.
- Operation with filter frames is optional.

9.2 Fan monitoring in the fan subassemblies

LEDs

The three red LEDs of the fan subassembly are assigned to the individual fans. From left to right, these are:

F1 - for fan 1

F2 - for fan 2

F3 - for fan 3

Fans

The fans have a redundant design. The fan subassembly continues to function even if one fan fails.

Fan monitoring

The function of the fans is controlled by means of speed monitoring. If the speed of a fan drops below the limit speed of 1750 rpm, the LED assigned to it lights up. In addition, the relay K1 drops out.

If the speed of a second fan drops below the limit speed, the LED assigned to it lights up; in addition, the relay K2 drops out.

The following table is the function table for the fan monitoring.

Table 9-1 Function of fan monitoring

Fan1	Fan2	Fan3	LED F1	LED F2	LED F3	Relay K1	Relay K2
-	-	-	H	H	H	-	-
-	-	+	H	H	D	-	-
-	+	-	H	D	H	-	-
+	-	-	D	H	H	-	-
-	+	+	H	D	D	-	+
+	-	+	D	H	D	-	+
+	+	-	D	D	H	-	+
+	+	+	D	D	D	+	+
-*	-*	-*	D*	D*	D*	-*	-*

+	Fan in operation or relay picked up
-	Fan failed or relay dropped out
D	LED is dark
H	LED lights up
*	At power off

Example of a message concept

You can check the fault-free functioning of the fan subassembly using digital inputs.

You can cause the power supply to be cut off after the failure of at least two fans by using the relay K2. For example, you can use an intermediate contactor to interrupt the mains.

The relay contacts are labeled as follows:

Relay K1: No. 1 to 3

Relay K2: No. 4 to 6

The following diagram explains the circuit in the fan subassembly when all fans are functioning.

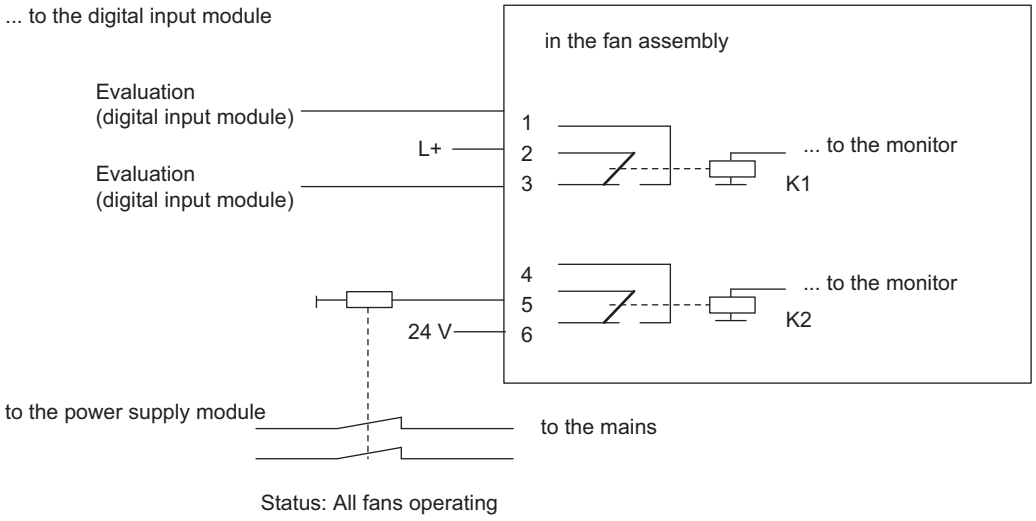

Figure 9-1 Example of a message concept

9.3 Cable duct (6ES7408-0TA00-0AA0)

Function

The cable duct is used when installing outside a cabinet for

- clamping cables and/or for
- shielding or for
- air inlet without fan support

Front view of the cable duct

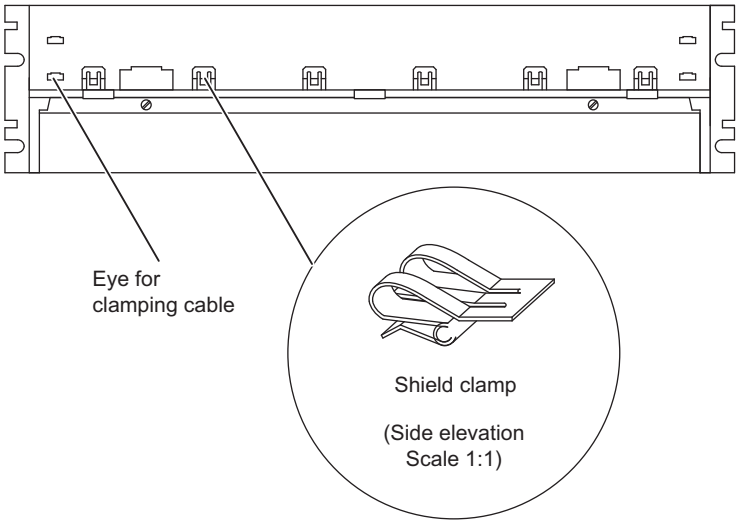

Figure 9-2 Front view of the cable duct

Shielding clamps

If you do not require the shielding clamps supplied, do not install them in the cable duct.

Specifications

Dimensions W x H x D (mm)	482.5 x 109.5 x 235
Weight	Approx. 1200 g

9.4 The 120/230 VAC fan subassembly (6ES7408-1TB00-0XA0)

Operator controls and indicators on the 120/230 VAC fan subassembly

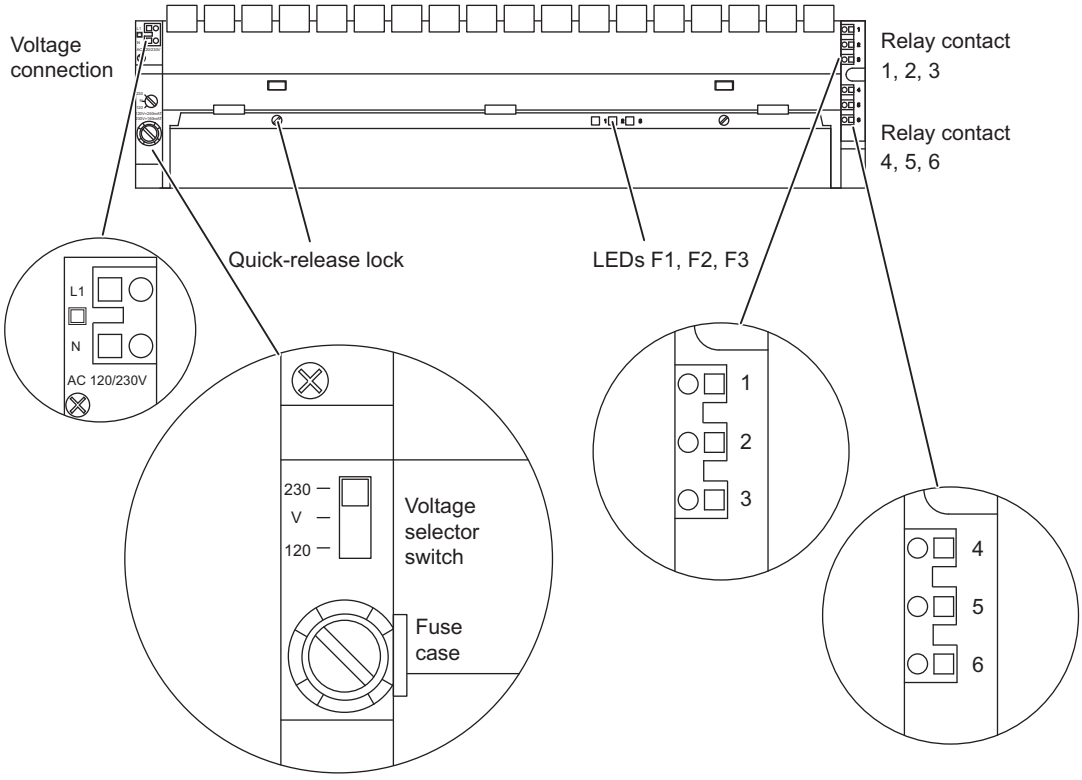

Figure 9-3 Controls and indicators of the fan subassembly 120/230 VAC (6ES7408-1TB00-0XA0)

Fuse

Included in this fan subassembly are standard cartridge fuse links, 5 x 20 mm, conforming to DIN

- 250 mAT for 120 V
- 160 mAT for 230 V.

The fuse for the 230 V range is already installed on shipping from the factory.

Note

If you change the voltage range, you must also insert the fuse for this voltage range in the fan subassembly. You will find a description of how to change the fuse in the *Installation manual*.

Shielding clamps

If you do not require the shielding clamps supplied, do not install them in the fan subassembly.

Installation

Follow to the general installation guidelines when mounting the 24 V DC fan subassembly, see *Installation* manual.

Specifications

Dimensions, weights		
Dimensions W x H x D (mm) Weight	482.5 x 109.5 x 235 Approx. 2000 g	
Cable cross-section	0.5 to 2.5 mm² (litz with connector sleeve)	
Electrical parameters		
Lifespan of the fans at 40 °C	Typ. 70 000 h	
Max. contact load of relay contacts 1 to 6		
• Switching voltage	24 VDC	
• Permitted range	Static: 20.4 to 28.8 VDC Dynamic: 18.5 to 30.2 V	
• Switching current	200 mA	
Voltages, currents, electrical potentials		
At nominal voltage of	230 VAC	120 VAC
Voltage range	170 VAC to 264 VAC	85 VAC to 132 VAC
Frequency	47 to 63 Hz	47 to 63 Hz
Power consumption		
• With fan	17 W	18 W
• Without fan	5 W	4 W
Rated current	90 mA	175 mA
Starting current	0.6 A	1.15 A
Fuses Wickmann Series 195	250 V / 160 mA	250 V / 250 mA

WARNING

Contact with electrical current can lead to personal injury.

If you remove the left cover when installing or removing the fan subassembly, the terminals on the transformer are accessible briefly.

Remove the voltage from the fan subassembly before you install or remove it. Disconnect the supply cable before you remove the fan subassembly.

CAUTION

Danger of damage to equipment.

If you mix up the power supply PCB and the monitoring PCB in the fan subassembly, the fan subassembly may be damaged.

During maintenance of the unit, make sure you do not mix up the power supply PCB and the monitoring PCB.

Monitoring function

In the case of a fault (defective fans) the fans are not switched off. Once you have replaced the defective fan(s), the fault is acknowledged automatically as soon as the fans have reached the required speed. Any faults that occur are not stored. When you switch on the fan subassembly, the fans start running. After approximately 10 s the current status of the fans is indicated via LEDs and relays.

9.5 The 24 V DC fan subassembly (6ES7408-1TA01-0XA0)

Operator controls and indicators on the 24 VDC fan subassembly

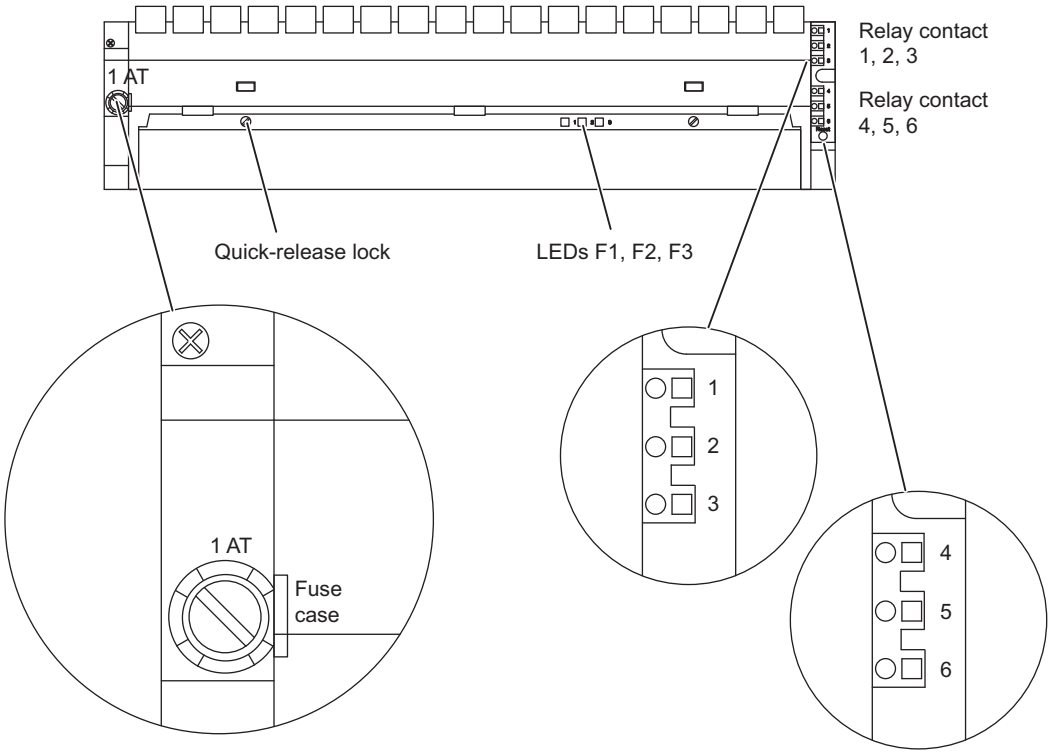

Figure 9-4 Controls and indicators of the fan subassembly 24 VDC (6ES7408-1TA00-0XA0)

Features

The 24 VDC fan subassembly has the same construction and functional characteristics as the 120/230 VAC fan subassembly.

Wiring

You connect the 24 VDC fan subassembly to the 24 VDC supply in the same manner as for the 120/230 VAC fan subassembly. You should note the polarity of the spring connections L+ and L-.

Signaling concept

The signaling concept of the 24 VDC fan subassembly is identical to the signaling concept of the 120/230 VAC fan subassembly.

Fuse

Included in this fan subassembly are standard cartridge fuse links, 5 x 20 mm, conforming to DIN

- 1.0 AT for 24 V

The fuse is already installed on shipping from the factory.

Shielding clamps

If you do not require the shielding clamps supplied, do not install them in the fan subassembly.

Installation

Follow to the general installation guidelines when mounting the 24 V DC fan subassembly, see *Installation* manual.

Technical specifications

Dimensions, weights	
Dimensions W x H x D (mm) Weight	482.5x 109.5 x 235 Approx. 1600 g
Cable cross-section	0.5 to 2.5 mm² (litz with connector sleeve)
Electrical parameters	
Lifespan of the fans at 40 °C	Typ. 70 000 h
Maximum contact load of relay contacts 1 to 6	
• Switching voltage	24 VDC
• Permitted range	Static 20.4 to 28.8 VDC Dynamic: 18.5 to 30.2 VDC
• Switching current	200 mA
Voltages, currents, electrical potentials	
Input voltage	
• Nominal value	24 VDC
• Permissible range	Static: 19.2 to 28 V
Rated current	450 mA
Starting current	0.9 A at 24 V
Fuses Wickmann Series 195	250 V / 1.0 AT
Power consumption	
• With fan	12 W
• Without fan	1.4 W

CAUTION

Danger of damage to equipment.

If you insert the monitoring PCB in the wrong position in the fan subassembly, the fan subassembly may be damaged.

During maintenance of the unit, make sure you do not insert the replacement monitoring PCB in the wrong position.

Monitoring function

In the case of a fault (defective fans) the fans are not switched off. Once you have replaced the defective fan(s), the fault is acknowledged automatically as soon as the fans have reached the required speed. Any faults that occur are not stored.

When you switch on the fan subassembly, the fans start running. After approximately 10 s the current status of the fans is indicated via LEDs and relays.

RS 485 repeater

10

10.1 Introduction

Overview

This section describes the RS 485 repeater in detail.

This includes:

- The purpose of the RS 485 repeater
- The maximum cable lengths between two RS 485 repeaters
- Functions of the various operating elements and terminals
- Information about grounded and ungrounded operation
- Specifications and the block diagram

Further information

You will find further information on the RS 485 repeater in the section "Configuring of an MPI or PROFIBUS-DP Network" of the manual *Hardware and Installation*.

10.2 Applications and features (6ES7972-0AA01-0XA0)

Application of the RS 485 repeater

The RS 485 repeater amplifies data signals on bus lines and couples bus segments. You need an RS 485 repeater for the following situations:

- There are more than 32 nodes connected to the bus.
- Bus segments should be operated ungrounded on the bus.
- The maximum cable length of a segment is exceeded.

Table 10-1 Maximum cable length of a segment

Baud rate	Max. cable length of a segment (in m)
9.6 to 187.5 Kbps	1000
500 Kbps	400
1.5 Mbps	200
3 to 12 Mbps	100

Rules

The following applies if you configure the bus with RS 485 repeaters:

- No more than 9 RS 485 repeaters can be connected in series.
- The maximum cable length between two nodes with RS 485 repeater may not exceed the values listed in the table below.

Table 10-2 Maximum cable length between two RS 485 repeaters

Baud rate	Max. cable length between 2 nodes (in m) with the RS 485 repeater (6ES7 972-0AA01-0XA0)
9.6 to 187.5 Kbps	10000
500 Kbps	4000
1.5 Mbps	2000
3 to 12 Mbps	1000

10.3 Design of the RS 485 repeater (6ES7972-0AA01-0XA0)

Design

The table below shows the design and functions of the RS 485 repeater.

Description and functions of the RS 485 repeater

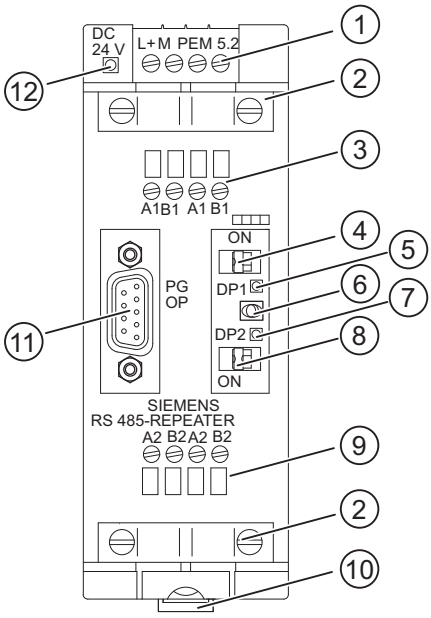

(1) Connection for the RS 485 repeater power supply (pin "M5.2" is the ground reference, if you want to measure the voltage difference between terminals "A2" and "B2").

(2) Shielding clamp for the strain relief and grounding of the bus cable of bus segments 1 or 2

(3) Terminals for the bus cable of bus segment 1

(4) Terminating resistance for bus segment 1

(5) LED for bus segment 1

(6) OFF switch
(= isolate bus segments from each other, for example, for commissioning)

(7) LED for bus segment 2

(8) Terminating resistance for bus segment 2

(9) Terminals for the bus cable of bus segment 2

(10) Slide for mounting and removing the RS 485 repeater on the DIN rail

(11) Interface for PG/OP on bus segment 1

(12) LED 24 V supply voltage

10.4 RS 485 repeater in ungrounded and grounded operation

Grounded or ungrounded

The following applies to the RS 485 repeater:

- It is grounded, if all other nodes on the segment are also operated on ground potential
- It is ungrounded, if all other nodes in the segment are operated with an ungrounded potential

Note

Bus segment 1 is grounded if you connect a programming device with a pure MPI interface to the PG/OP socket of the RS 485 repeater. The segment is grounded, because the MPI in the PG is grounded, and the PG/OP socket of the RS 485 repeater is connected internally with bus segment 1. This does not apply when the programming device has a combination MPI/DP interface.

Grounded operation of the RS 485 repeater

For grounded operation of the RS 485 repeater, you must jump terminals "M" and "PE" on the top of the RS 485 repeater.

Ungrounded operation of the RS 485 repeater

For ungrounded operation of the RS 485 repeater, "M" and "PE" on the top of the RS 485 repeater must not be interconnected. In addition, the supply voltage to the RS 485 repeater must be ungrounded.

Connection scheme

In a repeater configuration with ungrounded reference potential (ungrounded operation), any interference currents and static charges are discharged to the protective conductor by means of an RC network integrated in the repeater (refer to the figure below).

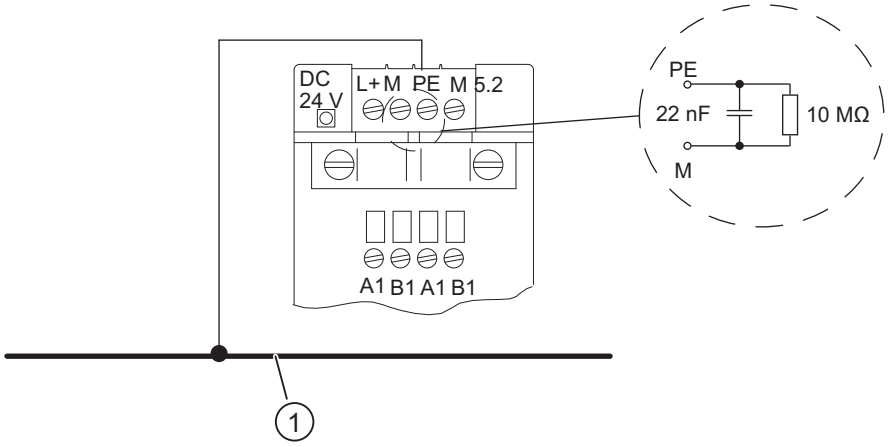

Figure 10-1 RC network with 10 M Ohm for configuration with ungrounded reference potential

(1) Ground busbar

Electrical isolation between bus segments

Bus segments 1 and 2 are electrically isolated. The PG/OP interface is connected internally to the port for bus segment 1. The figure below shows the front panel of the RS 485 repeater.

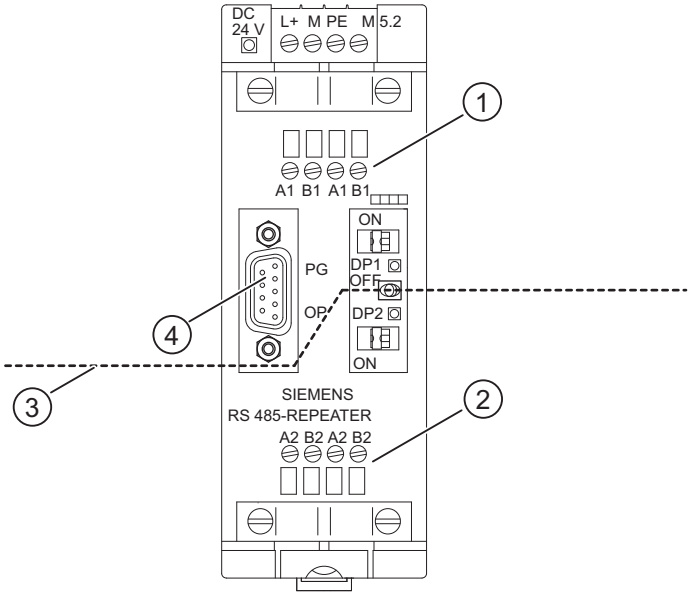

Figure 10-2 Electrical isolation between the bus segments

(1) Terminals for bus segment 1

(2) Terminals for bus segment 2

(3) Isolation

(4) PG/OP interface

Amplification of bus signals

The amplification of the bus signals takes place between the port for bus segment 1 or the PG/OP interface and the port for bus segment 2.

10.5 Specifications

Specifications of the RS 485 repeater

Specifications	
Dimensions W x H x D (mm)	45 x 128 x 67
Power supply • Nominal voltage Ripple	 24 VDC 20.4 to 28.8 VDC
Current consumption at nominal voltage	
• Without load on PG/OP socket	200 mA
• Load on PG/OP socket (5 V/90 mA)	230 mA
• Load on PG/OP socket (24 V/100 mA)	200 mA
Isolation	Yes, 500 VAC
Connection of fiber-optic conductors	Yes, via repeater adapters
Redundancy mode	No
Transmission rate (automatically detected by the repeater)	9.6 Kbps, 19.2 Kbps, 45.45 Kbps, 93.75 Kbps, 187.5 Kbps, 500 Kbps, 1.5 Mbps, 3 Mbps, 6 Mbps, 12 Mbps
Degree of protection	IP 20
Weight (including packaging)	350 g

Pin assignment of the sub-D connector (PG/OP socket)

View	Pin No.	Signal name	Designation
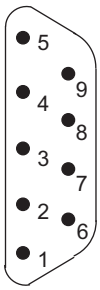	1	-	-
	2	M24V	Ground 24 V
	3	RxD/TxD-P	Data line B
	4	RTS	Request to send
	5	M5V2	Data reference potential (from station)
	6	P5V2	Supply plus (from station)
	7	P24V	24 V
	8	RxD/TxD-N	Data line A
	9	-	-

Block diagram of the RS 485 repeater

- Bus segments 1 and 2 are electrically isolated.
- Bus segment 2 and the PG/OP socket are electrically isolated from each other.
- Signals are amplified
  - Between bus segments 1 and 2
  - Between PG/OP socket and bus segment 2

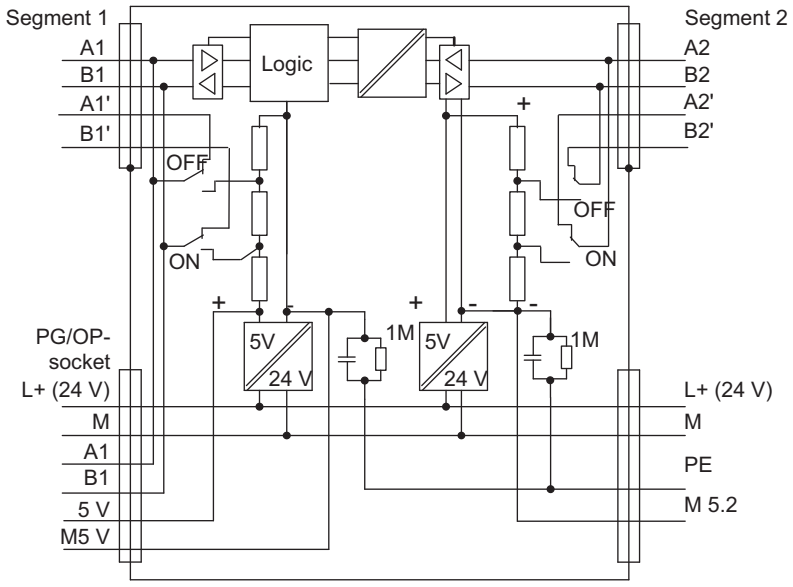

Figure 10-3 Block diagram of the RS 485 repeater

Parameter sets of signal modules

A

A.1 How to assign the parameters for signal modules in the user program

Parameter assignment in the user program

You have already assigned parameters to the modules in STEP 7.

In the user program, you can use an SFC:

- To assign new parameters to the module
- To transfer the parameters from the CPU to the addressed signal module

Parameters stored in data records

The signal module parameters are stored in data records 0 and 1.

Modifiable parameters

You can edit the parameters of data record 1, and then transfer these to the signal module using SFC55. The CPU parameters are not changed by this action!

You cannot modify any parameters of data record 0 in the user program.

SFCs for parameter assignment

SFCs available for programming signal modules in the user program:

Table A-1 SFCs for assigning parameters to signal modules

SFC No.	Identifier	Application
55	WR_PARM	Transfer modifiable parameters (data record 1) to the addressed signal module.
56	WR_DPARM	Transfer parameters (data record 0 or 1) from the CPU to the addressed signal module.
57	PARM_MOD	Transfer all parameters (data record 0 and 1) from the CPU to the addressed signal module.

Description of the parameters

The next chapters describe all modifiable parameters of the various module classes. The parameters of the signal modules are described:

- In the online help of STEP 7
- In this reference manual
  The sections dealing with the various signal modules also show you the corresponding configurable parameters.

Further references

An in-depth description of the principle of assigning parameters to signal modules in the user program and a description of the SFCs that can be used for that purpose will be found in the STEP 7 manuals.

A.2 Parameters of digital input modules

Parameters

The table below lists the parameters you can set for digital input modules.

The comparison illustrates the parameters you can edit:

- In STEP 7
- Using SFC 55 "WR_PARM"

The parameters set with STEP 7 can also be transferred with SFCs 56 and 57 to the module (refer to the STEP 7 manuals).

Table A-2 Parameters of digital input modules

Parameters	Data record number	Parameter assignment with SFC 55	Parameter assignment with STEP 7
Destination CPU for interrupt	0	No	Yes
Input delay		No	Yes
Diagnostics		No	Yes
Hardware interrupt enable	1	**Yes**	Yes
Diagnostics interrupt enable		**Yes**	Yes
Reaction to error*		**Yes**	Yes
Hardware interrupt at positive edge		**Yes**	Yes
Hardware interrupt at negative edge		**Yes**	Yes
Enable substitute value "1"*		**Yes**	Yes
* Only for 6ES7 421-7BH0x-0AB0			

Note

If you want to enable the diagnostic interrupt in the user program in data record 1, you must enable the diagnostics in data record 0 beforehand using STEP 7.

Structure of data record 1

A data record consists of several bytes, the bits of which can be active or inactive:

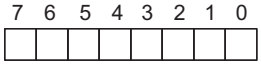

Figure A-1 For example, byte 1 with the bits 0 - 7

The figure below shows the structure of data record 1 (bytes 0, 1, 2 and 3) for the parameters of digital input modules.

You enable a parameter by setting a logical "1" at the corresponding bit.

Table A-3 Data record 1 for parameters of digital input modules

Byte	Bit	Meaning
Byte 0	7	Hardware interrupt enable
	6	Diagnostics interrupt enable
	0	Reaction to error[1]
Byte 1 **Hardware interrupt**	7	On rising edge at channel 7
	6	On rising edge at channel 6
	5	On rising edge at channel 5
	4	On rising edge at channel 4
	3	On rising edge at channel 3
	2	On rising edge at channel 2
	1	On rising edge at channel 1
	0	On rising edge at channel 0
Byte 2 **Hardware interrupt**	7	On rising edge at channel 15
	6	On rising edge at channel 14
	5	On rising edge at channel 13
	4	On rising edge at channel 12
	3	On rising edge at channel 11
	2	On rising edge at channel 10
	1	On rising edge at channel 9
	0	On rising edge at channel 8
Byte 3 **Hardware interrupt**	7	On falling edge at channel 7
	6	On falling edge at channel 6
	5	On falling edge at channel 5
	4	On falling edge at channel 4
	3	On falling edge at channel 3
	2	On falling edge at channel 2
	1	On falling edge at channel 1
	0	On falling edge at channel 0
[1] Only for 6ES7 421-7BH0x-0AB0		

The following table shows the structure of data record 1 (bytes 4, 5, and 6) for the parameters of digital input modules.

You enable a parameter by setting a logical "1" at the corresponding bit.

Table A-4 Data record 1 for parameters of digital input modules

Byte	Bit	Meaning
Byte 4	7	On falling edge at channel 15
	6	On falling edge at channel 14
	5	On falling edge at channel 13
	4	On falling edge at channel 12
	3	On falling edge at channel 11
	2	On falling edge at channel 10
	1	On falling edge at channel 9
	0	On falling edge at channel 8
Byte 5	7	Enable substitute value 1 on channel 7
Substitute value[1]	6	Enable substitute value 1 on channel 6
	5	Enable substitute value 1 on channel 5
	4	Enable substitute value 1 on channel 4
	3	Enable substitute value 1 on channel 3
	2	Enable substitute value 1 on channel 2
	1	Enable substitute value 1 on channel 1
	0	Enable substitute value 1 on channel 0
Byte 6	7	Enable substitute value 1 on channel 15
Substitute value[1]	6	Enable substitute value 1 on channel 14
	5	Enable substitute value 1 on channel 13
	4	Enable substitute value 1 on channel 12
	3	Enable substitute value 1 on channel 11
	2	Enable substitute value 1 on channel 10
	1	Enable substitute value 1 on channel 9
	0	Enable substitute value 1 on channel 8

[1] Only for 6ES7 421-7BH0x-0AB0

A.3 Parameters of digital output modules

Parameters

The table below contains all parameters you can set for digital output modules. The comparison shows:

- Which parameters you can change with STEP 7 and
- Which parameters you can change using SFC 55 "WR_PARM".

The parameters set with STEP 7 can also be transferred with SFCs 56 and 57 to the module (refer to the STEP 7 manuals).

Table A-5 Parameters of the digital output modules

Parameters	Data record no.	Parameter assignment with SFC 55	Parameter assignment with STEP 7
Destination CPU for interrupt	0	No	Yes
Diagnostics		No	Yes
Diagnostics interrupt enable	1	**Yes**	Yes
Reaction to CPU STOP		**Yes**	Yes
Enable substitute value "1"*		**Yes**	Yes

Note

If you want to enable the diagnostic interrupt in the user program in data record 1, you must enable the diagnostics in data record 0 beforehand using STEP 7.

Structure of data record 1

The figure below shows the structure of data record 1 (bytes 0, 1 and 2) for the parameters of digital output modules.

You enable a parameter by setting a logical "1" at the corresponding bit.

Table A-6 Data record 1 for parameters of digital output modules

Byte	Bit	Meaning
Byte 0	7	
	6	Diagnostics interrupt enable
	5	
	4	
	3	
	2	
	1	
	0	Reaction to CPU STOP
Byte 1 Substitute value	7	Enable substitute value 1 on channel 7
	6	Enable substitute value 1 on channel 6
	5	Enable substitute value 1 on channel 5
	4	Enable substitute value 1 on channel 4
	3	Enable substitute value 1 on channel 3
	2	Enable substitute value 1 on channel 2
	1	Enable substitute value 1 on channel 1
	0	Enable substitute value 1 on channel 0
Byte 2 Substitute value	7	Enable substitute value 1 on channel 15
	6	Enable substitute value 1 on channel 14
	5	Enable substitute value 1 on channel 13
	4	Enable substitute value 1 on channel 12
	3	Enable substitute value 1 on channel 11
	2	Enable substitute value 1 on channel 10
	1	Enable substitute value 1 on channel 9
	0	Enable substitute value 1 on channel 8

The following table shows the structure of data record 1 (bytes 3, and 4) for the parameters of digital output modules.

You enable a parameter by setting a logical "1" at the corresponding bit.

Table A-7 Data record 1 for parameters of digital output modules

Byte	Bit	Meaning
Byte 3* Substitute value	7	Enable substitute value 1 on channel 23
	6	Enable substitute value 1 on channel 22
	5	Enable substitute value 1 on channel 21
	4	Enable substitute value 1 on channel 20
	3	Enable substitute value 1 on channel 19
	2	Enable substitute value 1 on channel 18
	1	Enable substitute value 1 on channel 17
	0	Enable substitute value 1 on channel 16

Byte	Bit	Meaning
Byte 4*	7	Enable substitute value 1 on channel 31
Substitute value	6	Enable substitute value 1 on channel 30
	5	Enable substitute value 1 on channel 29
	4	Enable substitute value 1 on channel 28
	3	Enable substitute value 1 on channel 27
	2	Enable substitute value 1 on channel 26
	1	Enable substitute value 1 on channel 25
	0	Enable substitute value 1 on channel 26
* Bytes 3 and 4 are not relevant for SM 421;DO 16 x DC 20-125 V/1.5A		

A.4 Parameters of analog input modules

Parameters

The table below lists all parameters you can set for analog input modules.

The comparison illustrates the parameters you can edit:

- In STEP 7
- Using SFC 55 "WR_PARM"

The parameters set with STEP 7 can also be transferred with SFCs 56 and 57 to the module (refer to the STEP 7 manuals).

Table A-8 Parameters of analog input modules

Parameters	Data record no.	Parameter assignment with SFC 55	Parameter assignment with STEP 7
Destination CPU for interrupt	0	No	Yes
Measuring method		No	Yes
Measuring range		No	Yes
Diagnostics		No	Yes
Temperature unit		No	Yes
Temperature coefficient		No	Yes
Noise suppression		No	Yes
Smoothing		No	Yes
Reference junction		No	Yes
End of cycle interrupt		No	Yes
Diagnostics interrupt enable	1	**Yes**	Yes
Hardware interrupt enable		**Yes**	Yes
Reference temperature	1	**Yes**	Yes
High limit	1	**Yes**	Yes
Low limit	1	**Yes**	Yes

Note

If you want to enable the diagnostic interrupt in the user program in data record 1, you must enable the diagnostics in data record 0 beforehand using STEP 7.

Structure of data record 1

The figure below shows the structure of data record 1 for the parameters of analog input modules.

You enable a parameter by setting a logical "1" at the corresponding bit.

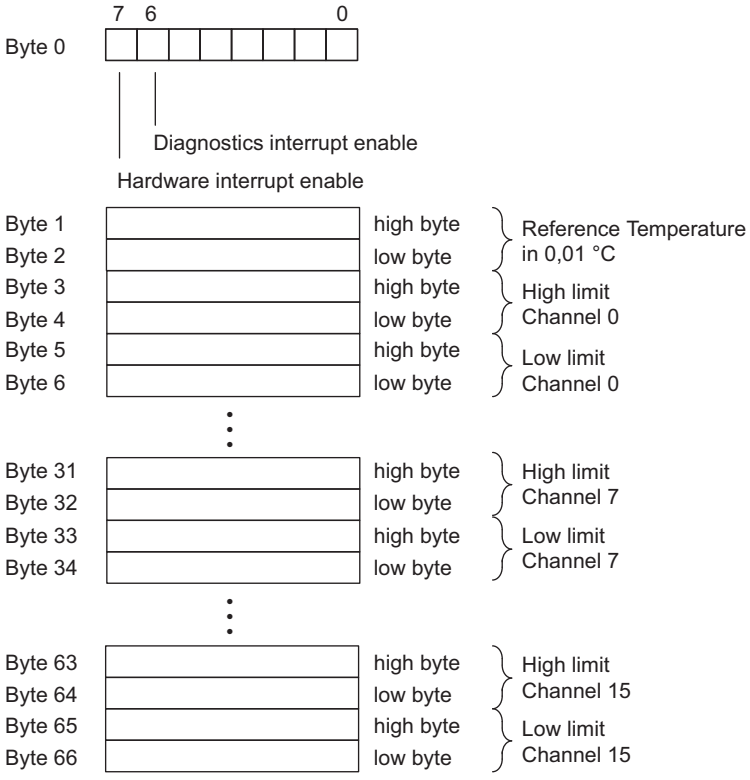

Figure A-2 Data record 1 for the parameters of analog input modules

Note

The representation of limits and the reference temperature corresponds to the analog value representation. Observe range limits when setting the limit values.

Diagnostic data of signal modules

B

B.1 Evaluating diagnostic data of signal modules in the user program

This section

This section describes the diagnostic data structure in system data. You must be familiar with this configuration if you want to evaluate the diagnostic data of the signal module in the STEP 7 user program.

Diagnostic data stored in data records

Module diagnostic data may have a length of max. 43 bytes, and are contained in data records 0 and 1:

- Data record 0 contains 4 bytes of diagnostic data describing the current state of an automation system.
- Data record 1 contains the 4 bytes of diagnostic data that are also contained in data record 0 and as many as 39 bytes of module specific diagnostic data.

Further references

An in-depth description of the principle of evaluating the diagnostic data of signal modules in the user program and a description of the SFCs that can be used for that purpose will be found in the STEP 7 manuals.

B.2 Structure and contents of diagnostic data bytes 0 and 1

Overview

The section below describes the structure and content of the various bytes in diagnostic data. General rule: When an error occurs, the bit concerned is set to "1".

Bytes 0 and 1

Table B-1 Bytes 0 and 1 of diagnostic data

Byte	Bit	Meaning
Byte 0	7	Incorrect parameter in the module
	6	No module parameters
	5	Front connector missing
	4	External auxiliary voltage missing
	3	Channel error
	2	External error
	1	Internal error
	0	Module error
Byte 1	7	0
	6	0
	5	0
	4	Channel information available
	3	Module type (see table "Codes of the module types")
	2	
	1	
	0	

Module types

The table below lists the module type IDs (bits 0 to 3 in byte 1).

Table B-2 Codes of the module types

ID	Module type
0101	Analog module
0110	CPU
1000	Function module
1100	CP
1111	Digital module

B.3 Diagnostic data of the digital input modules as of byte 2

Overview

The structure and contents of the different bytes of the diagnostic data for special digital input modules are described below. General rule: When an error occurs, the bit concerned is set to "1".

You will find a description of possible error causes and appropriate remedies in the section "Diagnostics of the modules".

Bytes 2 and 3 of the SM 421; DI 16 x DC 24 V

Table B-3 Bytes 2 and 3 of the diagnostic data of the SM 421; DI 16 x DC 24 V

Byte	Bit	Meaning
Byte 2	7	0
	6	0
	5	0
	4	Module-internal supply voltage failure
	3	0
	2	Operating mode 0: RUN; 1: STOP
	1	0
	0	0
Byte 3	7	0
	6	Hardware interrupt lost
	5	0
	4	0
	3	0
	2	EPROM error
	1	0
	0	0

Bytes 4 to 8 of the SM 421; DI 16 x DC 24 V

Table B-4 Bytes 4 to 8 of the diagnostic data of the SM 421; DI 16 x DC 24 V

Byte	Bit	Meaning
Byte 4	7	0
	6	Channel type B#16#70: Digital input
	5	
	4	
	3	
	2	
	1	
	0	

Byte	Bit	Meaning
Byte 5	7	Number of diagnostics bits that the module outputs per channel: 8 bits long
	0	
Byte 6	7	Number of channels of the same type in one module: 16 channels
	0	
Byte 7	5	Channel error 7
	6	Channel error 6
	5	...
	4	...
	3	...
	2	...
	1	Channel error 1
	0	Channel error 0
Byte 8	7	Channel error 15
	6	Channel error 14
	5	...
	4	...
	3	...
	2	...
	1	Channel error 9
	0	Channel error 8

Bytes 9 to 24 of the SM 421; DI 16 x DC 24 V

Data record 1 contains the channel-specific diagnostic data, starting at bytes 9 to 24. The figure below shows the assignment of the diagnostic byte for a channel of the module.

Table B-5 Diagnostic byte for a channel of the SM 421; DI 16 x DC 24 V

Byte	Bit	Meaning
Bytes 9 - 24	7	0
	6	0
	5	Sensor supply missing
	4	Wire break
	3	0
	2	0
	1	0
	0	Configuring/parameter assignment error

Bytes 2 and 3 of the SM 421; DI 16 x UC 24/60 V

Table B-6 Bytes 2 and 3 of the diagnostic data of the SM 421; DI 16 x UC 24/60 V

Byte	Bit	Meaning
Byte 2	7	0
	6	0
	5	0
	4	0
	3	0
	2	Operating mode 0: RUN; 1: STOP
	1	0
	0	0
Byte 3	7	0
	6	Hardware interrupt lost
	5	0
	4	0
	3	0
	2	EPROM error
	1	0
	0	0

Bytes 4 to 8 of the SM 421; DI 16 x UC 24/60 V

Table B-7 Bytes 4 to 8 of the diagnostic data of the SM 421; DI 16 x UC 24/60 V

Byte	Bit	Meaning
Byte 4	7	0
	6	Channel type B#16#70: Digital input
	5	
	4	
	3	
	2	
	1	
	0	
Byte 5	7	Number of diagnostics bits that the module outputs per channel: 8 bits long
	0	
Byte 6	7	Number of channels of the same type in one module: 16 channels
	0	
Byte 7	7	Channel error 7
	6	Channel error 6
	5	...
	4	...
	3	...
	2	...
	1	Channel error 1
	0	Channel error 0

Byte	Bit	Meaning
Byte 8	7	Channel error 15
	6	Channel error 14
	5	...
	4	...
	3	...
	2	...
	1	Channel error 9
	0	Channel error 8

Bytes 9 to 24 of the SM 421; DI 16 x UC 24/60 V

Data record 1 contains the channel-specific diagnostic data, starting at bytes 9 to 24. The figure below shows the assignment of the diagnostic byte for a channel of the module.

Table B-8 Diagnostic byte for a channel of the SM 421; DI 16 x DC 24 V

Byte	Bit	Meaning
Byte 9-24	7	0
	6	0
	5	0
	4	Wire break
	3	0
	2	0
	1	0
	0	Configuring/parameter assignment error

B.4 Diagnostic data of the digital output modules as of byte 2

Overview

The structure and contents of the different bytes of the diagnostic data for special digital output modules are described below. General rule: When an error occurs, the bit concerned is set to "1".

You will find a description of possible error causes and appropriate remedies in the section on the special module.

Bytes 2 and 3 of the SM 422; DO 16 x DC 20-125 V/1.5 A

Table B-9 Bytes 2 and 3 of the diagnostic data of the SM 422; DO 16 x DC 20-125 V/1.5 A

Byte	Bit	Meaning
Byte 2	7	0
	6	0
	5	0
	4	0
	3	0
	2	Operating mode 0: RUN; 1: STOP
	1	0
	0	0
Byte 3	7	0
	6	0
	5	0
	4	0
	3	0
	2	EPROM error
	1	0
	0	0

Bytes 4 and 8 of the SM 422; DO 16 x DC 20-125 V/1.5 A

Table B-10 Bytes 4 to 8 of the diagnostic data of the SM 422; DO 16 x DC 20-125 V/1.5 A

Byte	Bit	Meaning
Byte 4	7	0
	6	Channel type B#16#72: digital output
	5	
	4	
	3	
	2	
	1	
	0	

Byte	Bit	Meaning
Byte 5	7	Number of diagnostics bits that the module outputs per channel: 8 bits long
	0	
Byte 6	7	Number of channels of the same type in one module: 16 channels
	0	
Byte 7	7	Channel error 7
	6	Channel error 6
	5	...
	4	...
	3	...
	2	...
	1	Channel error 1
	0	Channel error 0
Byte 8	7	Channel error 15
	6	Channel error 14
	5	...
	4	...
	3	...
	2	...
	1	Channel error 9
	0	Channel error 8

Bytes 9 and 24 of the SM 421; DO 16 x DC 20-125 V/1.5 A

Data record 1 contains the channel-specific diagnostic data, starting at bytes 9 to 24. The figure below shows the assignment of the diagnostic byte for a channel of the module.

Table B-11 Diagnostic byte for a channel of the SM 422; DO 16 x DC 20-125 V/1.5 A

Byte	Bit	Meaning
Bytes 9 - 24	7	0
	6	External load voltage missing
	5	0
	4	0
	3	Short-circuit to M
	2	0
	1	0
	0	Configuring/parameter assignment error

Bytes 2 and 3 of the SM 422; DO 32 x DC 24 V/0.5 A

Table B-12 Bytes 2 and 3 of the diagnostic data of the SM 422; DO 32 x DC 24 V/0.5 A

Byte	Bit	Meaning
Byte 2	7	0
	6	0
	5	0
	4	Module-internal supply voltage failure
	3	0
	2	Operating mode 0: RUN; 1: STOP
	1	0
	0	0
Byte 3	7	0
	6	0
	5	0
	4	0
	3	0
	2	EPROM error
	1	0
	0	0

Bytes 4 to 10 of the SM 422; DO 32 x DC 24 V/0.5 A

Table B-13 Bytes 4 to 10 of the diagnostic data of the SM 422; DO 32 x DC 24 V/0.5 A

Byte	Bit	Meaning
Byte 4	7	0
	6	Channel type B#16#72: digital output
	5	
	4	
	3	
	2	
	1	
	0	
Byte 5	7	Number of diagnostics bits that the module outputs per channel: 8 bits long
	0	
Byte 6	7	Number of channels of the same type in one module: 32 channels
	0	
Byte 7	7	Channel error 7
	6	Channel error 6
	5	...
	4	...
	3	...
	2	...
	1	Channel error 1
	0	Channel error 0

Byte	Bit	Meaning
Byte 8	7	Channel error 15
	6	Channel error 14
	5	...
	4	...
	3	...
	2	...
	1	Channel error 9
	0	Channel error 8
Byte 9	7	Channel error 23
	6	Channel error 22
	5	...
	4	...
	3	...
	2	...
	1	Channel error 17
	0	Channel error 16
Byte 10	7	Channel error 31
	6	Channel error 30
	5	...
	4	...
	3	...
	2	...
	1	Channel error 25
	0	Channel error 24

Bytes 11 to 42 of the SM 422; DO 32 x DC 24 V/0.5 A

Data record 1 contains the channel-specific diagnostic data, starting at bytes 11 to 42. The figure below shows the assignment of the diagnostic byte for a channel of the module.

Table B-14 Diagnostic byte for a channel of the SM 422; DO 32 x DC 24 V/0.5 A

Byte	Bit	Meaning
Bytes 11 - 42	7	0
	6	External load voltage missing
	5	0
	4	Wire break
	3	Short-circuit to M
	2	Short-circuit to L+
	1	0
	0	Configuring/parameter assignment error

Bytes 2 and 3 of the SM 422; DO 16 x AC 20-120 V/2 A

Table B-15 Bytes 2 and 3 of the diagnostic data of the SM 422; DO 16 x AC 20-120 V/2 A

Byte	Bit	Meaning
Byte 2	7	0
	6	0
	5	0
	4	0
	3	0
	2	Operating mode 0: RUN; 1: STOP
	1	0
	0	0
Byte 3	7	0
	6	0
	5	0
	4	0
	3	0
	2	EPROM error
	1	0
	0	0

Bytes 4 to 8 of the SM 422; DO 16 x AC 20-120 V/2 A

Table B-16 Bytes 4 to 8 of the diagnostic data of the SM 422; DO 16 x AC 20-120 V/2 A

Byte	Bit	Meaning
Byte 4	7	0
	6	Channel type B#16#72: digital output
	5	
	4	
	3	
	2	
	1	
	0	
Byte 5	7	Number of diagnostics bits that the module outputs per channel: 8 bits long
	0	

Byte	Bit	Meaning
Byte 6	7	Number of channels of the same type in one module: 16 channels
	0	
Byte 7	7	Channel error 7
	6	Channel error 6
	5	...
	4	...
	3	...
	2	...
	1	Channel error 1
	0	Channel error 0
Byte 8	7	Channel error 15
	6	Channel error 14
	5	...
	4	...
	3	...
	2	...
	1	Channel error 9
	0	Channel error 8

Bytes 9 to 24 of the SM 422; DO 16 x AC 20-120 V/2 A

Data record 1 contains the channel-specific diagnostic data, starting at bytes 9 to 24. The figure below shows the assignment of the diagnostic byte for a channel of the module.

Table B-17 Diagnostic byte for a channel of the SM 422; DO 16 x AC 20-120 V/2 A

Byte	Bit	Meaning
Bytes 9 - 24	7	0
	6	0
	5	Fuse blown
	4	0
	3	0
	2	0
	1	0
	0	Configuring/parameter assignment error

B.5 Diagnostic data of the analog input modules as of byte 2

Overview

The structure and contents of the different bytes of the diagnostic data for the special analog input modules are described below. General rule: When an error occurs, the bit concerned is set to "1".

You will find a description of possible error causes and appropriate remedies in the section on the special module.

Bytes 2 and 3 of the SM 431; AI 16 x 16 bit

Table B-18 Bytes 2 and 3 of the diagnostic data of the SM 431; AI 16 x 16 bit

Byte	Bit	Meaning
Byte 2	7	0
	6	0
	5	0
	4	0
	3	0
	2	Operating mode 0: RUN; 1: STOP
	1	0
	0	Measuring range module incorrect or missing
Byte 3	7	0
	6	Hardware interrupt lost
	5	0
	4	ADC/DAC error
	3	RAM error
	2	EPROM error
	1	0
	0	0

Bytes 4 to 8 of the SM 431; AI 16 x 16 bit

Table B-19 Bytes 4 to 8 of the diagnostic data of the SM 431; AI 16 x 16 bit

Byte	Bit	Meaning
Byte 4	7	0
	6	Channel type B#16#71: Analog input
	5	
	4	
	3	
	2	
	1	
	0	
Byte 5	7	Number of diagnostics bits that the module outputs per channel: 8 bits long
	0	
Byte 6	7	Number of channels of the same type in one module: 16 channels
	0	
Byte 7	7	Channel error 7
	6	Channel error 6
	5	...
	4	...
	3	...
	2	...
	1	Channel error 1
	0	Channel error 0

Byte	Bit	Meaning
Byte 8	7	Channel error 15
	6	Channel error 14
	5	...
	4	...
	3	...
	2	...
	1	Channel error 9
	0	Channel error 8

Bytes 9 to 24 of the SM 431; AI 16 x 16 bit

Data record 1 contains the channel-specific diagnostic data, starting at bytes 9 to 24. The figure below shows the assignment of the diagnostic byte for a channel of the module.

Table B-20 Diagnostic byte for a channel of the SM 431; AI 16 x 16 bit

Byte	Bit	Meaning
Byte 9-24	7	Overflow
	6	Underflow
	5	Reference channel error
	4	Wire break
	3	Short-circuit to M
	2	0
	1	0
	0	Configuring/parameter assignment error

Bytes 2 and 3 of the SM 431; AI 8 x RTD x 16 bit

Table B-21 Bytes 2 and 3 of the diagnostic data of the SM 431; AI 8 x RTD x 16 bit

Byte	Bit	Meaning
Byte 2	7	0
	6	0
	5	0
	4	0
	3	0
	2	Operating mode 0: RUN; 1: STOP
	1	0
	0	0

Byte	Bit	Meaning
Byte 3	7	0
	6	Hardware interrupt lost
	5	0
	4	ADC/DAC error
	3	0
	2	EPROM error
	1	0
	0	0

Bytes 4 and 7 of the SM 431; AI 8 x RTD x 16 bit

Table B-22 Bytes 4 to 7 of the diagnostic data of the SM 431; AI 8 x RTD x 16 bit

Byte	Bit	Meaning
Byte 4	7	0
	6	Channel type B#16#71: Analog input
	5	
	4	
	3	
	2	
	1	
	0	
Byte 5	7	Number of diagnostics bits that the module outputs per channel: 16 bits long
	0	
Byte 6	7	Number of channels of the same type in one module: 8 channels
	0	

Byte	Bit	Meaning
Byte 7	7	Channel error 7
	6	Channel error 6
	5	...
	4	...
	3	...
	2	...
	1	Channel error 1
	0	Channel error 0

Bytes 8 and 23 of the SM 431; AI 8 x RTD x 16 bit

Data record 1 contains the channel-specific diagnostic data, starting at bytes 8 to 23. The following table shows the assignment of the **even** diagnostic bytes (bytes 8, 10, to 22) for a channel of the module.

Table B-23 Even diagnostic byte for a channel of the SM 431; AI 8 x RTD x 16 bit

Byte	Bit	Meaning
Byte 8-23 even	7	Overflow
	6	Underflow
	5	0
	4	Wire break
	3	0
	2	0
	1	0
	0	Configuring/parameter assignment error

The following table shows the assignment of the **odd** diagnostic bytes (bytes 9, 11, to 23) for a channel of the module.

Table B-24 Odd diagnostic byte for a channel of the SM 431; AI 8 x RTD x 16 bit

Byte	Bit	Meaning
Byte 8-23 odd	7	User calibration does not correspond to the parameter assignment
	6	Open conductor in the current source
	5	0
	4	Underrange or overrange
	3	Run time calibration error
	2	Open conductor in - direction
	1	Open conductor in + direction
	0	User connection not wired

Bytes 2 and 3 of the SM 431; AI 8 x 16 bit

Table B-25 Bytes 2 and 3 of the diagnostic data of the SM 431; AI 8 x 16 bit

Byte	Bit	Meaning
Byte 2	7	0
	6	0
	5	0
	4	0
	3	0
	2	Operating mode 0: RUN; 1: STOP
	1	0
	0	Thermocouple connection error
Byte 3	7	0
	6	Hardware interrupt lost
	5	0
	4	ADC/DAC error
	3	RAM error
	2	EPROM error
	1	0
	0	0

Bytes 4 to 7 of the SM 431; AI 8 x 16 bit

Table B-26 Bytes 4 to 7 of the diagnostic data of the SM 431; AI 8 x 16 bit

Byte	Bit	Meaning
Byte 4	7	0
	6	Channel type B#16#71: Analog input
	5	
	4	
	3	
	2	
	1	
	0	
Byte 5	7	Number of diagnostics bits that the module outputs per channel: 16 bits long
	0	

Byte	Bit	Meaning
Byte 6	7	Number of channels of the same type in one module: 8 channels
	0	
Byte 7	7	Channel error 7
	6	Channel error 6
	5	.....
	4	.....
	3	.....
	2	.....
	1	Channel error 1
	0	Channel error 0

Bytes 8 to 23 of the SM 431; AI 8 x 16 bit

Data record 1 contains the channel-specific diagnostic data, starting at bytes 8 to 23. The following table shows the assignment of the **even** diagnostic bytes (bytes 8, 10, to 22) for a channel of the module.

Table B-27 Even diagnostic byte for a channel of the SM 431; AI 8 x 16 bit

Byte	Bit	Meaning
Bytes 8-23 even	7	Overflow
	6	Underflow
	5	Reference channel error
	4	Wire break
	3	0
	2	0
	1	0
	0	Configuring/parameter assignment error

The following table shows the assignment of the **odd** diagnostic bytes (bytes 9, 11, to 23) for a channel of the module.

Table B-28 Odd diagnostic byte for a channel of the SM 431; AI 8 x 16 bit

Byte	Bit	Meaning
Byte 8-23	7	User calibration does not correspond to the parameter assignment
odd	6	0
	5	0
	4	0
	3	Runtime calibration error
	2	0
	1	0
	0	0

Accessories and spare parts

C

C.1 Accessories and spare parts

Accessories and spare parts

Accessories - spare parts	Order number
For racks	
Number wheel for slot labeling	C79165-Z1523-A22
Spare slot covers (qty 10)	6ES7490-1AA00-0AA0
For power supplies	
Spare connector for PS 405 (DC)	6ES7490-0A00-0AA0
Spare connector for PS 407 (AC)	6ES7490-0AB00-0AA0
Backup battery	6ES7971-0BA00
For digital modules/analog modules	
Cover foil (10 x) for labeling strips of the SMs	6ES7492-2XX00-0AA0
Cover flap for fuse receptacle on the AC modules	6ES7422-0XX00-7AA0
Measuring range module for analog modules	6ES7974-0AA00-0AA0
Front connector screw-type connection	6ES7492-1AL00-0AA0
Front connector spring connection	6ES7492-1BL00-0AA0
Front connector crimp connection	6ES7492-1CL00-0AA0
Panel for front connector, 5 pieces	6ES7492-2XL00-0AA0
Crimping tool for crimp contacts	6XX3 071
Crimp contacts (package of 250)	6XX3 070
Extraction tool for crimp contacts	6ES5 497-8MA11
Fuses, 8 A, quick blow	
• Wickmann	194-1800-0
• Schurter	SP001.1013
• Littelfuse	217.008
Labeling sheet for the front connector, petrol blue	6ES7492-2AX00-0AA0
Labeling sheet for the front connector, light	6ES7492-2BX00-0AA0
Labeling sheet for the front connector, yellow	6ES7492-2CX00-0AA0
Labeling sheet for the front connector, red	6ES7492-2DX00-0AA0
For IMs	
Terminator for IM 461–0	6ES7461-0AA00-7AA0
Terminator for IM 461–3	6ES7461-3AA0-7AA0
Terminator for IM 461–4	6ES7461-4AA00-7AA0
IM 463-, send IM, 600 m to IM 314 of the S5	6ES7463-2AA00-0AA0
IM cable with communication bus, 0,75 m	6ES7468-1AH50-0AA0
IM cable with communication bus, 1.5 m	6ES7468-1BB50-0AA0

Accessories - spare parts	Order number
IM cable with communication bus, 5 m	6ES7468-1BF00-0AA0
IM cable with communication bus, 10 m	6ES7468-1CB00-0AA0
IM cable with communication bus, 25 m	6ES7468-1CC50-0AA0
IM cable with communication bus, 50 m	6ES7468-1CF00-0AA0
IM cable with communication bus, 100 m	6ES7468-1DB00-0AA0
IM cable with current transmission, 0,75 m	6ES7468-3AH50-0AA0
IM cable with current transmission, 1.5 m	6ES7468-3BB50-0AA0
Package with plug adapters for IM 467 FO	6ES7195-1BE00-0XA0
Package with simplex plugs and polishing set for IM 467 FO	6GK1901-0FB00-0AA0
For interfacing / networking	
Standard mounting rail 35 mm	6ES5710-8MA...
PROFIBUS	6XV1830-0BH10 6XV1830-3BH10
PROFIBUS	6XV1830-0BH10
PROFIBUS	6XV1830-3BH10
PROFIBUS bus connector without PG socket	6ES7972-0BA00-0XA0
PROFIBUS bus connector with PG socket	6ES7972-0BB10-0XA0
PROFIBUS bus connector without PG socket, with angled cable outlet	6ES7972-0BA40-0X40
PROFIBUS bus connector with PG socket, with angled cable outlet	6ES7972-0BB40-0X40
PROFIBUS RS 485 bus terminal	6GK1500-0AA00 6GK1500-0AB00 6GK1500-0DA00
PC/MPI cable (5 m)	6ES7901-2BF00-0AA0
For fan subassembly	
Spare fan for fan subassembly	6ES7408-1TA00-6AA0
Filters (qty 10) for fan subassembly	6ES7408-1TA00-7AA0
Monitoring PCB for fan subassembly	6ES7408-1TX00-6XA0
Power supply PCB for fan subassembly	6ES7408-1XX00-6XA0
Cabinets	
Cabinet 2200 x 800 x 400 with extension set for SIMATIC S7-	8MC 2281-7FC11-8DA1
Extension set for SIMATIC S7-	8MC 1605–BS70–AA0
Cables for printers with	
Cable for interface module	
• 1 m	6ES7368-3BB00-0AA0
• 2.5 m	6ES7368-3BC00-0AA0
• 5 m	6ES7368-3BF00-0AA0
• 10 m	6ES7368-3CB00-0AA0
Connector housing, gray	
• 9-pin	V42254-A6000-G109
• 15-pin	V42254-A6000-G115
• 25-pin	V42254-A6000-G125
Connector housing, black	
• 9-pin	V42254-A6001-G309

Accessories - spare parts	Order number
• 15-pin	V42254-A6001-G315
• 25-pin	V42254-A6001-G325

Directive on handling electrostatic sensitive devices (ESD)

D

D.1 ESD: What are the directives for handling electrostatic sensitive devices?

Definition

All electronic modules are equipped with large-scale integrated ICs or components. Due to their design, these electronic components are highly sensitive to overvoltage, and thus to any electrostatic discharge.

These **E**lectrostatic **S**ensitive **D**evices/**M**odules are commonly abbreviated **ESD**.

Electrostatic sensitive devices are labeled with the following symbol:

⚠ CAUTION
Electrostatic sensitive devices can be destroyed by voltages far below the level perceived by human beings. These voltages are generated when you touch a component or electrical connections of a module without having discharged your body. In most cases, the damage caused by overvoltage is not evident immediately, and results in damage only after a prolonged period of operation.

D.2 Electrostatic charging of persons

Electrostatic charging

Any person with a non-conductive connection to the electrical potential of its surroundings may be exposed to electrostatic charge.

The figure shows the maximum electrostatic voltage which may build up on a person coming into contact with the materials indicated. These values are in conformity with the specifications of IEC 61000-4-2.

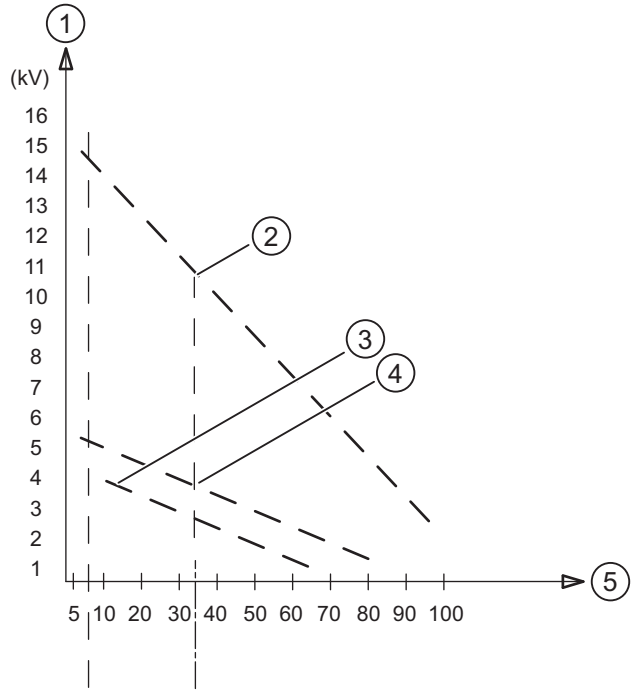

Figure D-1 Electrostatic voltages which can build up on a person

(1) Voltage in kV

(2) Synthetic material

(3) Wool

(4) Antistatic materials, such as wood or concrete

(5) Relative air humidity in %

D.3 Basic protective measures against electrostatic discharge

Ensure sufficient grounding

Make sure all persons, workplaces and packaging are sufficiently grounded when ESD components are being handled. This prevents electrostatic charging.

Avoid direct contact

You should only touch ESD components if this is unavoidable (for example, during maintenance work). Handle the modules without touching any chip pins or PCB traces. In this way, the discharged energy can not affect the sensitive devices.

Discharge your body before you start taking any measurements on a module. Do so by touching grounded metallic parts. Always use grounded measuring instruments.

List of abbreviations

E

E.1 List of abbreviations

List of abbreviations

Abbreviations	Explanations
AC	Alternating current
ADC	Analog-to-digital converter
AI	Analog input
AO	Analog output
AS	Automation system
STL	Statement list (type of representation in STEP 7)
BAF	Battery failure
BUS1F; BUS2F	LED bus failure on the MPI/PROFIBUS DP interface 1 or 2
CH	Channel
COMP	Compensation circuit
CP	Communications processor
CPU	Central processing unit of the PLC
CR	Central rack
DAC	Digital-to-analog converter
DB	Data block
DC	Direct current
DI	Digital input
DO	Digital output
ESD	Electrostatic sensitive device
EMC	Electromagnetic compatibility
EEPROM	Electrically erasable programmable read-only memory
EPROM	Erasable programmable read-only memory
ER	Expansion rack
ID	Input delay
SV	Set substitution value
EXM	Extension module
EXTF	Error LED "external fault"
FB	Function block
FC	Function
FEPROM	Flash erasable programmable read-only memory
FM	Function module
FRCE	Fiber-optic cable
FC	Function block diagram

Abbreviations	Explanations
GD	Global data communication
ES	Sensor supply
IC	Constant-current line
IFM1F; IFM2F	LED error at interface module 1/2
IM	Interface module
INTF	Error LED "internal fault"
IP	Intelligent I/O
L+	Terminal for 24 VDC supply voltage
HLV	KLV
FOC	Fiber-optic cable
LAD	Ladder logic diagram
M	Chassis ground
M+	Measuring line (positive)
M-	Measuring line (negative)
M_{ANA}	Reference potential of the analog measuring circuit
MPI	Multipoint interface
MRES	Master reset position of the toggle switch for general reset of the CPU
MSTR	Master
OB	Organization block
OP	Operator panel
OS	Operator system
PIO	Process image of outputs
PII	Process image of inputs
PG	Programming device
PS	Power supply
Q_I:	Analog output current
Q_V:	Analog output voltage
RAM	Random access memory
REDF	Redundancy fault
R_L:	Load impedance
S +	Sensing line (positive)
S-	Sensing line (negative)
SCL	Structured control language
SFB	System function block
SFC	System function
SM	Signal module
PLC	Programmable logic controller
SSL	Signal module
TD	HMI (text display)
SSL	Transducer
UC	Universal current
TD	Universal rack
U_{CM}	Common mode voltage

Abbreviations	Explanations
U_H:	Auxiliary voltage
U_{iso}	Potential difference between M_{ANA} and local ground
USR	User
Vs	Sensor voltage
Sign	Sign
CR	Central rack

Glossary

2-conductor/3-conductor/4-conductor connection

Method of connecting to the module, for example, connecting resistance thermometers or resistors to the front connector of the analog module or loads to the voltage output of an analog output module.

2-wire transducer/4-wire transducer

Type of transducer (2-wire transducer: Power supply via terminals of the

analog input module; 4-wire transducer: power supply via separate connectors of the transducer)

Address

An address identifies a specific operand or range of operands, examples: input I 12.1; memory word MW25; data block DB3.

Automation system

An automation system is a → programmable controller comprising a → central rack, a CPU and various input/output modules.

Backplane bus

The backplane bus is a serial data bus over which modules communicate with each other and over which they are supplied with the necessary voltage. The connection between modules is established by bus connectors.

Backup battery

The backup battery ensures that the → user program on the → CPU is not lost in the event of a power failure and that defined data areas, bit memory, timers, and counters are also retained.

Backup voltage, external

The same backup can be achieved as with a backup battery if a backup voltage (direct voltage between 5 V and 15 V) is applied to the "EXT.-BATT." socket of the CPU.

The external backup voltage is required to replace a power supply module if the user program and data stored in a RAM (for example, bit memory, timers, counters, system data, integrated clock) needs to be backed up while the module is exchanged.

Basic error limit

The basic error limit represents the operational limit at 25° C relative to the nominal range of the analog module.

Baud rate

Speed of the data transmission (bps)

Central rack

An S7-400 consists of a central rack (CR) to which expansion racks (ER) can be assigned. The central rack is the rack containing the → CPU.

Cold restart

→ Hot restart of the automation system and its user program after all dynamic data (variables of the input/output image, internal registers, timers, counters etc. and their program sections) have been reset to a predefined value.

A cold start can be triggered automatically (for example following power outage, loss of information in the dynamic memory areas etc.).

Common mode voltage

Voltage common to all terminals of a group and that is measured between this group and any reference point (usually ground).

Communication load

Load on cyclic program execution of a CPU caused by communication activities (PROFIBUS-DP).

To prevent communication activities putting too much load on program execution, it is possible to set the maximum permitted cycle load caused by communication in the parameter assignment in STEP 7.

Communications processor

Programmable module for communication tasks, for example, point-to-point links.

Compensating box

Compensating boxes can be used when measuring temperatures with thermoelements connected to analog input modules. The compensating box is a circuit for compensating temperature fluctuations at the → reference junction.

Constant bus cycle time

Constant bus cycle time means a DP bus cycle accurate to a few microseconds that can be configured in STEP 7.

CP

→ Communications processor

Data block

Data blocks (DBs) are data areas in the user program that contain user data. There are shared data blocks that can be accessed by all logic blocks and there are instance data blocks assigned to a specific FB call.

Declaration

Definition of variables (for example parameters or local data of a block) with name, data type, comment etc.

Default (setting)

The default is a practical basic setting that is always used when no other value is specified.

Destruction limit

Limit of the permitted input voltage/current. If this limit is exceeded, the measurement accuracy can deteriorate. If the destruction limit is exceeded considerably, the internal measuring circuitry can be destroyed.

Diagnostic buffer

The diagnostic buffer is a buffered memory area on the CPU in which the diagnostic events are entered in the order in which they occur.

The user can read the precise cause of the problem from the diagnostic buffer with STEP 7 (PLC -> Module Information menu command) and start troubleshooting measures.

Diagnostic data

All diagnostic events that occur are collected on the CPU and entered in the → diagnostic buffer. If an error OB exists, this is started.

Diagnostic interrupt

Diagnostics-compliant modules signal detected system errors to the → CPU using diagnostic interrupts. If a diagnostic interrupt occurs, the CPU calls OB82.

Diagnostics

Generic term for → system diagnostics, process fault diagnostics and user-defined diagnostics.

Direct data exchange

Direct data exchange is sometimes also known as direct communication. In direct data exchange, local input address areas of an intelligent DP slave (for example, CPU 315-2 with PROFIBUS DP attachment) or a DP master are assigned to a PROFIBUS DP partner. The intelligent DP slave or the DP master receives the input data that the PROFIBUS DP partner sends to its DP master via these assigned input address areas.

DP master

A node with master functionality in PROFIBUS DP. A master that conforms to IEC 61784-1:2002 Ed1 CP 3/1 with the DP protocol is known as a DP master. The token allowing access to the bus is always passed on among the masters. The slaves, in this case DP slaves, can only react when requested to by a master. The following distinction must be made:

DP master (class 1): handles user data exchange with the DP slaves assigned to it.

DP master (class 2): Provides services such as: reading input/output data, diagnostics, global control.

DP slave

A → slave operated on PROFIBUS with the PROFIBUS DP protocol is known as a DP slave.

Equipotential bonding

An electrical connection (equipotential bonding conductor) that ties parts of electrical equipment and extraneous conductive parts to the same or approximately the same potential to prevent disturbing or dangerous voltages between these parts.

FB

→ Function block

FC

→ Function

Fiber-optic cable

The "force" function overwrites a variable (for example, memory bit, output) with a value defined by the user.

At the same time, the variable is write-protected so that the value cannot be modified from any other location (it cannot, for example, be overwritten by the user program). After removing the programming device, this value is retained.

The write-protection is canceled only after invoking the "unforce" function, following which the variable can once again be written with the value set by the user program.

The "force" function can, for example, be used during commissioning to set specific outputs to the "ON" state for any length of time even if the logic operation in the user program is not true (due to missing wiring at inputs).

A fiber-optic cable is a transmission medium made of glass or plastic fiber. Fiber-optic cables are insensitive to electromagnetic interference and allow high data transmission rates.

Fiber-optic cable

The "force" function overwrites a variable (for example, memory bit, output) with a value defined by the user.

At the same time, the variable is write-protected so that the value cannot be modified from any other location (it cannot, for example, be overwritten by the user program). After removing the programming device, this value is retained.

The write-protection is canceled only after invoking the "unforce" function, following which the variable can once again be written with the value set by the user program.

The "force" function can, for example, be used during commissioning to set specific outputs to the "ON" state for any length of time even if the logic operation in the user program is not true (due to missing wiring at inputs).

A fiber-optic cable is a transmission medium made of glass or plastic fiber. Fiber-optic cables are insensitive to electromagnetic interference and allow high data transmission rates.

Floating

In the case of floating I/O modules, the reference potentials of the control and load circuits are electrically isolated from each other, for example, by optocouplers, relay contacts, or transformers. The I/O circuits can be connected to a common potential.

FREEZE

Control command, inputs of the → DP slaves are frozen at their current values.

Function

According to IEC 1131-3, a function (FC) is a → logic block without → static data. A function allows parameter passing in the user program. This makes them suitable for programming commonly recurring complex functions such as calculations.

Function block

According to IEC 1131-3, a function block (FB) is a → logic block with → static data. An FB has "memory" so that it is possible to access its parameters (for example outputs) from any part of the user program.

Functional grounding

Grounding with the sole purpose of ensuring the intended function of the electrical equipment. Functional grounding, short-circuits interfering voltages that would otherwise have an unacceptable influence on the equipment.

Fuse blown

Parameter in STEP 7 for digital output modules. When the parameter is enabled, the blowing of one or more fuses is detected by the module. With suitable parameter assignment, a → diagnostic interrupt is triggered.

Grounding

Grounding means connecting an electrically conductive part to the ground electrode (one or more conductive parts that make good contact with ground) via a grounding system.

Hardware interrupt

A hardware interrupt is triggered by interrupt-triggering modules due to a particular event in the process (violation of a limit value, module has completed the cyclic conversion of its channels).

The hardware interrupt is signaled to the CPU. In keeping with the priority of this interrupt, the corresponding → organization block is then executed.

Hold last value (HLV)

The module retains the last value output prior to changing to STOP mode.

Hot restart

When a CPU starts up (for example as a result of activating the mode selector or turning on the power), cyclic program execution (OB1) initially processes either OB101 (hot restart), OB100 (cold restart: hot restart) or OB102 (cold restart). Backup of the CPU is absolutely necessary for a hot restart.

The following applies: all data areas (timers, counters, memory bits, data blocks) and their content are retained. The → process image of the inputs is read in and the execution of the STEP 7 user program is continued from the point at which it was last stopped (STOP, power down).

The other startup modes available are → cold restart and → warm restart.

I/O bus

Part of the → backplane bus in the automation system optimized for fast exchange of signals between the CPU or CPUs and the signal modules.

Useful data (for example, digital input signals of a signal module) and system data (for example default parameter data records of a signal module) is transferred over the I/O bus.

Input delay

Parameter in STEP 7 for digital input modules. The input delay is used to suppress coupled interference. Spurious pulses of 0 ms up to the selected input delay are suppressed.

The selected input delay is subject to a tolerance that can be found in the technical specifications of the module. A high input delay suppresses longer spurious pulses, a lower delay suppresses shorter spurious pulses.

The permitted input delay depends on the length of the cable between sensor and module. If, for example, there are long unshielded cables to the sensor (over 100 m), a high input delay must be set.

Integration time

The integration time is the reciprocal of the → interference frequency suppression in ms.

Interrupt

SIMATIC S7 recognizes 28 different priority classes that control the execution of the

user program. These priority classes include interrupts, such as hardware interrupts. When an interrupt occurs, the operating system automatically calls an assigned organization block in which the user can program the required reaction (for example, in an FB).

Interrupt reaction time

The interrupt reaction time is the time from the first occurrence of an interrupt signal to executing the first statement in the interrupt OB. General rule: Higher priority interrupts are serviced first. This means that the interrupt reaction time is extended by the program execution time of the higher priority interrupts and interrupts with the same priority that were called earlier (queue).

Linearity error

The linearity error indicates the maximum deviation of the measured/output value from the ideal linear relationship between measured/output signal and digital value. This is specified as a percentage related to the nominal range of the analog module.

Load memory

The load memory is part of a programmable module (CPU, CP). It contains the objects generated by the programming device (local objects). It is implemented either as a plug-in memory card or as integrated memory.

Local data

Local data is the data assigned to a → logic block that is declared in its → declaration section or in its variable declaration. It includes the following (block-specific): Formal parameters, → static data, → temporary data.

Measuring principle, instantaneous value encoding

A module with instantaneous value encoding is always used for extremely fast measurement methods or for values that change very quickly. With this technique, the module accesses the variable to be measured as quickly as possible and returns an instantaneous recording of the signal at a specific time. It should be remembered that due to this measurement method, the modules are more "sensitive" than the modules using the integrating method. As a result, interference affecting the measured value can lead to falsification. When using these modules, you should make sure that the measurement signal is "clean", for example by adhering to the installation instructions.

Measuring principle, integrating

A module with an integrating measurement technique is always used for measurements that are not time-critical. The integration time is inversely proportional to the network frequency. You set the network frequency in STEP 7 and this results in the integration time. At a network frequency of 50 Hz, the integration time is 20 ms or even multiples of 20 ms. Since the measured value is integrated over exactly this period, at least one or more entire periods of the network frequency that may be superimposed on the measurement signal are also recorded. The mean value of the interference is therefore integrated to zero (positive component of the first half period = negative component of the second half period) and, as a result of the principle, only the useful signal is detected.

Measuring range module

Measuring range submodules are plugged onto analog input modules to adapt them to various measuring ranges.

Memory reset

During a memory reset, the following memory areas of the CPU are erased: Work memory, write/read area of the load memory, system memory.

The MPI parameters and the diagnostic buffer are retained.

Mode

Mode means the following:

1. The mode in which the CPU operates as set by the mode selector or using a PG
2. The type of program execution on the CPU

Mode selector

Using the mode selector, the user can set the current mode of the CPU (RUN, STOP) or reset the memory of the CPU (MRES).

Noise suppression

Parameter in STEP 7 for analog input modules. The frequency of the alternating voltage power supply can interfere with the measured value, in particular when measuring small voltage ranges and with thermoelements. With this parameter, the user specifies the predominant power supply frequency in the system.

Non-isolated

With non-floating input/output modules, the reference potentials of the control and load circuits are electrically interconnected.

Operating state

The automation systems of SIMATIC S7 recognize the following operating modes or simply modes: STOP, → STARTUP, RUN and HOLD.

Operational limit

The operational limit is the measurement or output error of the analog module throughout the entire temperature range related to the nominal range of the analog module.

Parameters

1. Variables of a → logic block
2. Variable for setting the properties of a module (one or more per module). When shipped, every module has practical basic parameter settings that the user can modify in STEP 7.

Point-to-point link

On a point-to-point link, only two nodes are physically linked to each other. This type of communications link is used when the use of a communication network is not practical or when different types of nodes need to be connected (for example, PLC with process computer).

Priority class

The S7 CPU operating system provides up to 28 priority classes (= program execution levels"), for example for cyclic program execution, hardware interrupt-controlled program execution.

Each priority class is assigned to → organization blocks in which the user can program a reaction. The OBs have different default priorities and if the OBs are called at the same time, the priority decides which executes first and which can interrupt another. The default priorities can be modified by the user.

Process image

The signal states of the digital input and output modules are entered in a process image on the CPU.

A distinction is made between the process image of the inputs and the outputs. The process image of the inputs (PII) is read from the input modules by the operating system prior to execution of the user program. The process image of the outputs (PIQ) is transferred to the output modules by the operating system on completion of program execution.

Product version

The product version distinguishes products with the same order number. The product version is incremented when upwards-compatible functional enhancements are made, when there are modifications relating solely to production (use of new components) and when bugs are fixed.

PROFIBUS DP

Digital, analog and intelligent modules, along with a wide range of field devices complying with IEC 61784-1:2002 Ed1 CP 3/1, such as drives or valve clusters are moved away from the automation system to the local process over distances of up to 23 km.

The modules and field devices are interconnected with the automation system over the PROFIBUS DP Fieldbus and are addressed in the same way as centralized I/O.

Programming device

A programming device (PG) is a personal computer with a special compact design, suitable for industrial conditions. A programming device is completely equipped for programming the SIMATIC automation systems.

RC element

Connection of ohmic resistor and capacitor in series. When a consumer is turned off, an overvoltage occurs in circuits with an inductive load that can cause an electric arc and can reduce the life of the contacts. To extinguish this electric arc, the contact can be bridged by an RC element.

Reaction time

The reaction time is the time from detecting an input signal to changing the output signal associated with it.

The actual reaction time is between a longest and a shortest reaction time. When configuring a plant, the longest reaction time must always be assumed.

Reference channel error

Parameter in STEP 7 for analog input modules. This parameter enables the error group message of the reference junction when using thermoelements. A reference channel error occurs when using thermoelements:

- When a fault occurs (for example broken wire) in a reference channel to which a thermoresistor (RTD) is connected (channel 0) to compensate temperature drift.
- When the → reference temperature is outside the permitted range of values.

Each input channel to which the reference junction "RTD on channel 0" is assigned has the reference channel error in the situation described above - the measured temperature is no longer compensated.

Reference junction

Parameter in STEP 7 for analog input modules. This parameter specifies the reference point (point with known temperature) when using the thermoelements. Reference points can be: Thermoresistor on channel 0 of the module; → compensating box, → reference temperature.

Reference potential

Potential on the basis of which the voltages of the circuits involved are measured.

Reference temperature

Parameter in STEP 7 for analog input modules. The reference temperature is the temperature of the reference junction of thermoelements. The reference temperature allows correct temperature measurement with thermoelements. The temperature of the reference junction must be known because a thermoelement always detects the temperature difference between the measuring point and the reference junction.

Repeater

Device for amplifying bus signals and for linking → bus segments over long distances.

Repetition accuracy

The repetition accuracy is the maximum deviation of the measured/output values when the same input signal is applied or the same output value is specified repeatedly. The repetition accuracy relates to the nominal range of the module and applies to the settled state (in terms of temperature).

Resolution

With analog modules, this is the number of bits that represent the digitalized analog value in binary format. The resolution depends on the module and, with analog input modules, on the → integration time. The longer the integration time, the more precise the resolution of the measured value. The resolution including sign can be up to 16 bits.

Retentive memory

Data areas in data blocks along with timers, counters and bit memory are retentive when their content is retained through a warm restart or power cycle.

S7 basic communication

Communication functions integrated in the CPU of SIMATIC S7/C7 that can be called up by the user. These functions are called in the user program with → system functions. The user data length is up to 76 bytes (small amounts of data). S7 basic communication is implemented over → MPI.

S7 communication

Communication functions integrated in the CPU of SIMATIC S7/C7 that can be called up by the user. These functions are called in the user program with → system function blocks. The user data length is up to 64 Kbytes (large amounts of data). S7 communication provides a network-independent interface between devices of the types SIMATIC S7/C7 and PG/PC.

Segment

→ Bus segment

Shunt

Conductor connected in parallel in electric circuits.

Signal module

Signal modules (SMs) form the interface between the process and the automation system. There are input modules, output modules, input/output modules (in each case, digital and analog)

Smoothing

Parameter in STEP 7 for analog input modules. The measured values are smoothed by digital filtering. It is possible to select between no, weak, medium and strong filtering for each individual module. The stronger the smoothing, the higher the time constant of the digital filter.

Standard communication

Communication over standardized protocols such as PROFIBUS-DP, PROFIBUS-FMS.

Static data

Static data is data that is used only within a → function block. This data is stored in an instance data block belonging to the function block. Data stored in this way is retained until the next function block call.

Substitute value

Substitute values are values that are output to the process or are used in the user program instead of a process value if a signal output module is defective.

The substitute values can be selected by the user in the parameter settings in STEP 7 (retain old value, substitute value 0 or 1). Are the values to be output at an output or outputs in the CPU changes to STOP.

SYNC

Control command from the → master to the → slave: freezes the outputs at their current value.

System diagnostics

System diagnostics is the detection, evaluation and signaling of faults/errors occurring within the automation system. Examples of such faults and errors include: Program errors or failures on modules. System errors can be indicated by LEDs or in STEP 7.

Temperature coefficient

Parameter in STEP 7 for analog input modules during when measuring temperature with thermoresistors (RTD). The temperature coefficient is selected to suit the thermoresistor used (according to DIN standard).

Temperature error

The temperature error is the drift of the measured/output values caused by changes in the ambient temperature of the analog module. It is specified as a percentage per degree Kelvin and relates to the nominal range of the analog module.

Temperature error of the internal compensation

The temperature error of the internal compensation occurs only when measuring with thermoelements. It indicates the error that must be added to the actual temperature error when the "internal reference" mode is selected. The error is specified either as a percentage of the physical nominal range of the analog module or as an absolute value in °C.

Temporary data

Temporary data is → local data of a block that is entered in the L stack during execution of the block and that is no longer available on completion of execution.

Total current

Total of all the currents of all output channels of a digital output module.

Unforce

→ Force

Ungrounded

Without electrical connection to ground.

Warm restart

Warm restart following a power down with a set of dynamic data programmed by the user und a user program component specified in the system.

A warm restart is characterized by the setting of a status bit or other suitable means that can be read by the user program and indicate that the stoppage of the automation system caused by a power down was detected in RUN mode.

Wire break

Parameter in STEP 7. A line continuity or wire break check is used to monitor the connection from the input to the sensor or from the output to the actuator. If a broken wire is detected, the module senses a current flow at the input/output set in the parameter assignment.

Work memory

The work memory is a → RAM area on the → CPU that is accessed by the processor during execution of the user program.

Index

2

24 VDC fan subassembly
    Features, 378
    Installation, 379
    Specifications, 379
    wiring, 378
2-conductor connection, 209
2-wire transducer, 205

3

3-conductor connection, 208

4

4-conductor connection, 208
4-wire transducer, 206

A

Abbreviations, 429
AC
    Meaning, 429
Accessories
    Order numbers, 421
    S7-400, 421
ADC
    Meaning, 429
ADC-DAC error
    Analog input module, 220
Additional support, 4
Address area
    Setting, 348
Addressing
    S5 modules, 341
AI
    Meaning, 429
Ambient conditions, 24
    Climatic, 25
    IM 463-2, 339
    Mechanical, 24
Analog functions
    STEP 7 blocks, 161
Analog input channels
    Basic execution time, 193
    Conversion time, 193
    Cycle time, 193
    Measuring method, 186
    Measuring range, 186
    Representation of analog values, 166
Analog input module
    ADC-DAC error, 220
    Auxiliary voltage missing, 220
    Causes of error and remedies, 220
    Channel error, 220
    Channel information available, 220
    Configuration error, 220
    Connecting resistance thermometers, 208
    Connecting resistors, 208
    Connecting sensors, 201
    Connecting thermocouples, 210
    Diagnostic data, 413
    Diagnostic interrupt, 198
    diagnostic message in measured value, 218
    Diagnostic messages, 218
    Diagnostics, 198
    EPROM error, 220
    External error, 220
    Front connector missing, 220
    Hardware interrupt lost, 220
    Incorrect parameters, 220
    Internal error, 220
    isolated, 201
    Limit, 198
    Measurement, 198
    Measuring method, 198
    Measuring range, 199
    Measuring range module incorrect/missing, 220
    Module error, 220
    No parameters, 220
    Noise suppression, 199
    non-isolated, 201
    Overflow, 221
    Parameter assignment error, 220
    Parameters, 198, 397
    potential difference, 201
    RAM error, 220
    Reference channel error, 221
    Reference junction, 199
    Reference temperature, 199
    Run time calibration error, 221
    Short-circuit to M, 220
    SM 431, AI 16 x 13 bit, 259
    SM 431, AI 8 x 13 bit, 224

SM 431, AI 8 x 14 bit, 232, 248
SM 431, AI 8 x 16 bit, 298
SM 431, AI 8 x RTD x 16 bit, 287
SM 431; AI 16 x 16 bit, 268
Smoothing of analog input values, 193, 199
STOP mode, 220
Structure of data record 1, 397
Temperature coefficient, 199
temperature unit, 199
Underflow, 221
Wire break, 220
Wire break monitoring, 198
Analog module
Behavior, 189
Commissioning steps, 164
Determination of the measuring error/output error, 192
Diagnostics, 218
EXTF LED, 218
Interrupt, 222
INTF LED, 218
Load voltage failure, 190
Parameter assignment, 196
Analog modules, 161
Diagnostic interrupt, 222
Analog output channel
Conversion time, 195
Response time, 196
Analog output channels
Basic execution time, 195
Cycle time, 195
Analog output module
Connecting loads to a voltage output, 215
Connecting loads to current outputs, 217
Connecting loads/actuators, 214
electrically isolated, 214
Output, 200
Output range, 200
Output type, 200
Parameters, 200
Response time, 195
Settling time, 195
SM 432, AO 8 x 13 bit, 311
Analog output modules
Properties, 163
Analog signals
Cables, 214
Analog value
Converting, 164
Sign, 165
Analog-to-digital conversion, 193
AO
Meaning, 429
Application
IM 467/ IM 467 FO, 357
RS 485 repeater, 382
Area of application
IM 463-2, 339
AS
Meaning, 429
ATEX Directive, 15
Australia
Marking, 15
Auxiliary voltage missing
Analog input module, 220
Digital module, 89

B

Backplane bus, 44
Backup battery, 41
Function, 41
Shipping and storage conditions, 23
Specifications, 42
Storage, 23
Backup time, 42
Calculating, 42
BAF
Meaning, 429
Basic error limit, 192
Basic execution time
Analog input channels, 193
Analog output channels, 195
Basic knowledge required, 3
Battery, 23, 41
Battery type, 41
Battery voltage, 44
Bending radius
For FOC, 368
Block diagram
SM 431, AI 8 x 14 bit, 233, 249
SM 431, AI 8 x 16 bit, 312
SM 431, AI 16 x 13 bit, 260
SM 431, AI 8 x 16 bit, 299
SM 431, AI 8 x RTD x 16 bit, 288
SM 431; AI 16 x 16 bit, 269
Bus connector, 363
BUS1F; BUS2F
Meaning, 429
Bytes 0 and 1
of diagnostic data, 400

C

Cable
  Plug in, 344
  Prepare, 344
Cable 721
  Pin assignments, 351
Cable duct and fan subassemblies
  Features, 371
Cable length
  IM 463-2, 341
  Segment, 382
  Selecting, 345
Cable length selector switch, 343
Cable Lengths
  For PROFIBUS DP, 363
Cables, 322
  for analog signals, 201, 214
Calculating
  Backup time, 42
Calibration software, 288, 298
Causes of error and remedies
  Analog input module, 220
  Digital module, 89
CE marking, 13
Certifications, 13
CH
  Meaning, 429
Change
  Fuse, 146, 150
Changing
  Configuration in RUN (CiR), 196
  Fuse, 154
  Parameter assignment in the user program, 196
  Rack number, 326
Changing the fuse, 150
Channel cable, 374
  Function, 374
  Specifications, 374
Channel error
  Analog input module, 220
  Digital module, 89
Channel information available
  Analog input module, 220
  Digital module, 89
CiR, 84
Circuit diagram for SM 431; AI 8 x 13 bit, 224
Climatic ambient conditions, 25
Commissioning analog modules
  Steps, 164
Commissioning digital modules
  Steps, 83
Communication bus, 29
Communication services
  IM 467, 359
  IM 467 FO, 359
COMP
  Meaning, 429
Compatibility
  IM 460-4 and IM 461-4, 336
Compensating
  Reference junction temperature for thermocouples, 211
Compensating box, 212
  Connecting, 212
compensation
  external, 212
  Internal, 211, 212
Configurable diagnostic messages, 86
Configuration
  IM 467, 362
  IM 467 FO, 362
  Interface modules, 319
  S5 modules, 349
Configuration error
  Analog input module, 220
Configuration in RUN, 84
Configuration in RUN (CiR)
  Changing, 196
Configuration of analog output circuits
  SM 432, AO 8 x 13 Bit, 318
Connecting actuators
  to analog output module, 214
Connecting loads
  to analog output module, 214
Connecting loads to a voltage output
  to analog output module, 215
Connecting loads to current outputs
  to analog output module, 217
Connecting resistance thermometers
  to analog input module, 208
Connecting resistors
  to analog input module, 208
Connecting sensors
  to analog input module, 201
Connection
  Compensating box, 212
  Connecting loads to current outputs, 217
  Electrically isolated sensors, 201
  IM 463-2, 344
  IM 467 FO with fiber-optic cable, 366
  Non-isolated sensors, 203

Resistance thermometers and resistors, 208
rules, 321
Rules, 321
Thermocouples to resistance thermometers, 213
Voltage sensors, 204
Connection and circuit diagram
SM 421, DI 32 x 24 V DC, 96
SM 422, DO 32 x DC 24 V/0.5 A, 136, 139
SM 421, DI 16 x 24 V DC, 99
SM 421, DI 16 x UC 24/60 V, 111
SM 421, DI 16 x UC 120/230 V, 121
SM 421, DI 32 x UC 120 V, 125
SM 422, DO 16 x DC 24 V/2 A, 128
SM 422, DO 16 x AC 120/230 V/2 A, 148
SM 422, DO 8 x AC 120/230 V/5 A, 144
Connection diagram
SM 431, AI 8 x 13 bit, 226
SM 431, AI 8 x 14 bit, 234, 250
SM 431, AI 8 x 16 bit, 313
SM 431, AI 16 x 13 bit, 261
SM 431, AI 8 x RTD x 16 bit, 290
SM 431, AI 8 x 16 bit, 300
SM 431; AI 16 x 16 bit, 270
Connection scheme
RS 485 repeater, 384
Connector
Mounting, 366
Connector pin assignment, 364
Contact, direct, 427
Controlling
Operating state, 360
Conversion time
Analog input channels, 193
Analog output channel, 195
Converting
Analog values, 164
Courses, 5
Cover, 45
CP
Meaning, 429
CPU
Meaning, 429
CR
Meaning, 429, 431
CR2
Design, 33
Specifications, 33
CR3
Design, 34
Specifications, 34
cULus approval, 15
Relay modules, 16
Cycle time
Analog input channels, 193
Analog output channels, 195

D

DAC
Meaning, 429
Data record
for diagnostic data, 399
for parameters, 389
Data record 1
Analog input module design, 397
Digital input module configuration, 391
Digital output module design, 394
DB
Meaning, 429
DC
Meaning, 429
Definition
Electrostatic sensitive devices, 425
Degree of protection, 26
IP20, 26
Dependencies
Input values, 105
Output values, 143
Design
CR2, 33
CR3, 34
ER1, ER2, 36
IM 467/ IM 467 FO, 357
Power supply, redundant, 39
Rack, 27
UR1, 29
UR2-H, 31
Destination CPU for interrupt
Digital output module, 86
DI
Meaning, 429
Diagnostic data
Analog input modules:, 413
Bytes 0 and 1, 400
Data record, 399
Digital input modules, 401
Evaluating, 399
of the digital output modules, 406
of the SM 421, DI 16 x DC 24 V, 401
Signal modules, 399
SM 421, DI 16 x UC 24/60 V, 403
SM 422, DO 16 x AC 20-120 V/2 A, 411
SM 422, DO 16 x DC 20-125 V/1.5 A, 406
SM 422, DO 32 x DC 24 V/0.5 A, 408

SM 431, AI 8 x RTD x 16 bit, 415
SM 431, AI 16 x 16 Bit, 413
SM 431, AI 8 x 16 Bit, 418
Diagnostic data entry, 191
Diagnostic interrupt
Analog input module, 198
Analog modules, 222
Digital modules, 91
Diagnostic message, 88
Channel error, 88
Channel information available, 88
EPROM error, 88
External auxiliary voltage missing, 88
External error, 88
Front connector missing, 88
Fuse blown, 88
Hardware interrupt lost, 88
Incorrect parameters, 88
Internal error, 88
Internal voltage failure, 88
Load voltage L+ missing, 88
Module error, 88
No module parameters, 88
Parameter assignment error, 88
Sensor supply missing, 88
Short-circuit to L+, 88
Short-circuit to M, 88
Wire break, 88
Diagnostic messages, 87, 218
Analog input modules:, 218
Digital modules, 88
Reading, 87, 218
Diagnostics
Analog input module, 198
Analog modules, 218
Digital input module, 85
Digital output module, 86
for digital modules, 86
Diagnostics interrupt enable
Digital input module, 85
Digital output module, 86
Digital input module
Diagnostic data, 401
Diagnostics, 85
Diagnostics interrupt enable, 85
Hardware interrupt enable, 85
Input delay, 85
Keep last value, 85
Load voltage L+ missing, 85
Parameters, 85, 391
Sensor supply missing, 85
SM 421, DI 16 x 24 V DC, 98
SM 421, DI 16 x AC 120 V, 107
SM 421, DI 16 x UC 120/230 V, 117, 120
SM 421, DI 16 x UC 24/60 V, 110
SM 421, DI 32 x 24 V DC, 95
SM 421, DI 32 x UC 120 V, 124
Structure of data record 1, 391
Substitute a value, 85
Substitute a value "1", 85
Wire break monitoring, 85
Digital input modules
Features, 81
Digital module
Auxiliary voltage missing, 89
Causes of error and remedies, 89
Channel error, 89
Channel information available, 89
Commissioning steps, 83
Diagnostic messages, 88
Diagnostics, 86
EPROM error, 89
External error, 89
EXTF LED, 87
Front connector missing, 89
Fuse blown, 90
Hardware interrupt, 91
Hardware interrupt lost, 89, 92
Incorrect parameters, 89
Internal error, 89
Internal voltage failure, 89
Interrupt, 91
interrupt-triggering channels, 92
INTF LED, 87
Load voltage L+ missing, 90
Module error, 89
No parameters, 89
Parameter assignment, 83
Parameter assignment error, 89
Sensor supply missing, 90
Short-circuit to L+, 89
Short-circuit to M, 89
STOP mode, 89
Wire break, 90
Digital output module
Destination CPU for interrupt, 86
Diagnostic data, 406
Diagnostics, 86
Diagnostics interrupt enable, 86
Fuse blown, 86
Keep last value, 86
Load voltage L+ missing, 86
Parameters, 86, 394
Short-circuit to L+, 86

Short-circuit to M, 86
SM 422, DO 16 x AC 120/230 V/2 A, 147
SM 422, DO 16 x DC 24 V/2 A, 127
SM 422, DO 32 x DC 24 V/0.5 A, 135, 138
SM 422, DO 8 x AC 120/230 V/5 A, 143
SM 422, DO 16 x AC 20-120 V/2 A, 151
SM 422, DO 16 x DC 20-125 V/1.5 A, 130
Structure of data record 1, 394
Substitute a value, 86
Substitute a value "1", 86
Wire break monitoring, 86
Digital output modules
Features, 82
Discharge of static electricity
Protective measures, 427
Discharge, electrostatic
Persons, 426
Displaying parameter assignment errors
SM 431, AI 8 x RTD x 16 bit, 296
DO
Meaning, 429
Documentation package, 4
Dynamic parameters, 83

E

Edge, 85
EEPROM
Meaning, 429
Electrical isolation, 385
Electrically isolated sensors, 201
Connecting, 201
Electromagnetic compatibility, 20
Electrostatic sensitive devices
Definition, 425
EMC
Definition, 20
Meaning, 429
EMC definition, 20
EMC directive, 14
Emission of radio frequency interference, 21
Enabling
Interrupt, 91, 222
Ensuring
Wire break monitoring, 103, 114
EPROM, 429
EPROM error
Analog input module, 220
Digital module, 89
ER
Meaning, 429
ER1 and ER2
Specifications, 36
ER1, ER2
Design, 36
Error
of an analog module, 192
Error messages
Power supply modules, 46
ES
Meaning, 430
ESD
Meaning, 429
Evaluating
Diagnostic data, 399
EXM
Meaning, 429
External error
Analog input module, 220
Digital module, 89
EXTF
Meaning, 429
EXTF LED
Analog module, 218
Digital module, 87

F

Failure
Supply voltage, 105
Fan monitoring, 372
Fan subassemblies
120/230 VAC, 375
24 VDC, 378
Fans, 372
FB
Meaning, 429
FC
Meaning, 429
Features
24 VDC fan subassembly, 378
Cable duct and fan subassemblies, 371
Digital input modules, 81
Digital output modules, 82
Power supply modules, 37
Power supply, redundant, 39
Relay output module, 82
SM 421, DI 16 x AC 120 V, 107
SM 421, DI 16 x UC 120/230 V, 117
SM 422, DO 16 x AC 20-120 V/2 A, 151
SM 422, DO 16 x DC 20-125 V/1.5 A, 130
FEPROM
Meaning, 429

Firmware, 361
FM
Approval, 18
Meaning, 429
FOC
Meaning, 430
Reusing, 367
FRCE
Meaning, 429
Front connector missing
Analog input module, 220
Digital module, 89
Function
Backup battery, 41
Channel cable, 374
IM 460-0 and IM 461-0, 324
IM 460-1 and IM 461-1, 327
IM 460-3 and IM 461-3, 331
IM 460-4 and IM 461-4, 334
Interface modules, 319
Operator controls, 45
Functions
Power supply modules, 37
Rack, 27
Fuse, 379
change, 146
Changing, 154
The 120/230 VAC fan subassembly, 375
Fuse blown
Digital module, 90
Digital output module, 86

G

GD
Meaning, 430
Grounded operation
RS 485 repeater, 384
Grounding, 427

H

Hardware interrupt
Digital modules, 91
End of scan cycle, 223
when limit is exceeded, 222
Hardware interrupt enable
Digital input module, 85
Hardware interrupt lost
Analog input module, 220
Digital module, 89, 92
HLV
Meaning, 430
Hotline, 5

I

I/O bus, 29
IC
Meaning, 430
ID
Meaning, 429
Module types, 400
IEC 61131-2, 13
IFM1F; IFM2F
Meaning, 430
IM
Meaning, 430
IM 460-0 and IM 461-0
Function, 324
Operator controls and display elements, 324
Parameter assignment, 325
Technical specifications, 326
IM 460-1 and 461-1
Specifications, 330
IM 460-1 and IM 461-1
Function, 327
Operator controls and indicators, 328
Parameter assignment, 329
IM 460-3 and 461-3
Technical specifications, 333
IM 460-3 and IM 461-3
Function, 331
Operator controls and display elements, 331
Parameter assignment, 332
IM 460-4 and 461-4
Specifications, 336
IM 460-4 and IM 461-4
Compatibility, 336
Function, 334
Parameter assignment, 335
Position of operator control and display elements, 334
IM 463-2
Ambient conditions, 339
Area of application, 339
Cable 721, 351
Cable length, 341
Connecting, 344
EMC resistance, 339
Indicators, 342
LEDs, 343
Operator controls, 342

Order number, 339
Rules for connecting, 341
Specifications, 355
Terminator, 353
IM 467, 357
Communication services, 359
Configuration, 362
Connection to PROFIBUS DP, 362
Specifications, 368, 370
IM 467 FO, 357
Communication services, 359
Configuration, 362
Connection to PROFIBUS DP, 362
Fiber-optic cable, connecting, 366
IM operating mode, 360
IM 467/ IM 467 FO
Application, 357
Design, 357
Incorrect parameters
Analog input module, 220
Digital module, 89
Indicators, 43
IM 463-2, 342
Input characteristic curve to IEC 61131
for digital inputs, 93
Input delay, 106
Digital input module, 85
Input values
Dependencies, 105
Installation
24 VDC fan subassembly, 379
RS 485 repeater, 382
Safety requirements, 19
The 120/230 V DC fan subassembly, 376
Insulation resistance, 26
Insulation test, 26
Interface
Selecting, 344
Interface module
IM 460-1 and IM 461-1, 328
IM 460-3 and IM 461-3, 331
IM 460-4, 334
IM 460-4 and IM 461-4, 334
IM 461-4, 334
Interface modules
Configuration, 319
Function, 319
IM 460-0, 324
IM 460-1, 328
IM 460-3, 331
IM 461-0, 324
IM 461-1, 328
IM 461-3, 331
Interface selector switch, 343
Interference
pulse-shaped, 20
sinusoidal, 21
Interference frequency suppression 10 Hz
Step response, 307
Interference frequency suppression 400 Hz
Step response, 308
Interference frequency suppression 50 Hz
Step response, 307
Interference frequency suppression 60 Hz
Step response, 308
Internal error
Analog input module, 220
Digital module, 89
Internal voltage failure
Digital module, 89
Interrupt
Analog modules, 222
Digital modules, 91
Enabling, 91, 222
Interrupt-triggering channels
of the digital module, 92
INTF
Meaning, 430
INTF LED
Analog module, 218
Digital module, 87
IP
Meaning, 430
IP20, 26

K

Keep last value
Digital input module, 85
Digital output module, 86

L

L+
Meaning, 430
LAD
Meaning, 430
LED, 360
BAF, BATT1F, BATT2F, 44
BAF, BATTF, 44
Parameter assignment error, 281

LEDs, 43, 372
BAF, BATT1F, BATT2F, BATT INDIC on 1BATT, 49
BAF, BATT1F, BATT2F, BATT.INDIC on 2BATT, 50
BAF, BATTF; BATT INDIC on BATT, 49
IM 463-2, 343
INTF, 5 VDC, 24 VDC, 46
LEDs INTF, 5 VDC, 24 VDC, 44
Limit
Analog input module, 198
Line harmonics, 21
Load voltage failure
of the analog module, 190
Load voltage L+ missing
Digital input module, 85
Digital module, 90
Digital output module, 86
Low voltage directive, 14

M

M
Meaning, 430
M-
Meaning, 430
M+
Meaning, 430
MANA
Meaning, 430
Manual
purpose, 3
Manual package, 4
Marine approvals, 19
Marking
Australia, 15
New Zeeland, 15
Meaning
Abbreviations, 429, 430
AC:, 429
ADC:, 429
AI:, 429
AO:, 429
AS:, 429
BAF:, 429
BUS1F; BUS2F:, 429
CH:, 429
COMP:, 429
CP:, 429
CPU:, 429
CR, 431
CR:, 429
DAC:, 429
DB:, 429
DC:, 429
DI:, 429
DO:, 429
EEPROM:, 429
EMC:, 429
EPROM:, 429
ER:, 429
ES, 430
ESD:, 429
EXM:, 429
EXTF:, 429
FB:, 429
FC, 429
FC:, 429
FEPROM:, 429
FM:, 429
FOC, 430
FRCE:, 429
GD, 430
HLV, 430
IC, 430
ID:, 429
IFM1F; IFM2F, 430
IM, 430
INTF, 430
IP, 430
L+, 430
LAD, 430
M, 430
M-, 430
M+, 430
MANA, 430
MPI, 430
MRES, 430
MSTR, 430
OB, 430
OP, 430
OS, 430
PG, 430
PII, 430
PIO, 430
PLC, 430
PS, 430
QI, 430
QV, 430
RAM, 430
REDF, 430
RL, 430
S +, 430
SCL, 430
SFB, 430
SFC, 430

Sign, 431
SM, 430
SSL, 430
SSV:, 429
STL:, 429
TD, 430
UC, 430
UCM, 430
UH, 431
Uiso, 431
USR, 431
Vs, 431
Measured value resolution, 166
Measurement
Analog input module, 198
Measuring method
Analog input channels, 186
Analog input module, 198
Measuring methods
SM 431, AI 8 x RTD x 16 bit, 297
SM 431, AI 16 x 13 Bit, 266
SM 431, AI 16 x 16 Bit, 283
SM 431, AI 8 x 13 Bit, 231
SM 431, AI 8 x 14 Bit, 244, 257
SM 431, AI 8 x 16 Bit, 310
Measuring range
Analog input channels, 186
Analog input module, 199
Measuring range module, 186
Replugging, 187
Setting, 186
Measuring range module incorrect/missing
Analog input module, 220
Measuring range modules
SM 431, AI 16 x 13 Bit, 265
SM 431, AI 16 x 16 Bit, 279
SM 431, AI 8 x 14 Bit, 242, 254
Measuring ranges
SM 431, AI 8 x RTD x 16 bit, 297
SM 431, AI 16 x 13 Bit, 267
SM 431, AI 16 x 16 Bit, 285
SM 431, AI 8 x 13 Bit, 231
SM 431, AI 8 x 14 Bit, 247, 258
SM 431, AI 8 x 16 Bit, 310
Mechanical ambient conditions, 24
Testing, 25
Mode selector, 361
Module error
Analog input module, 220
Digital module, 89
Module overview, 162
Digital modules, 81
Module rack
UR1, 29
UR2, 29
Module replacement, 362
Module types
ID, 400
Modules
Shipping and storage conditions, 23
Storage, 23
Mounting
Connector, 366
MPI
Meaning, 430
MRES
Meaning, 430
MSTR
Meaning, 430
Multiprocessor operation, 362

N

New Zeeland
Marking, 15
No parameters
Analog input module, 220
Digital module, 89
Noise suppression
Analog input module, 199
Non-configurable diagnostic messages, 86
Non-isolated sensors, 202
Connecting, 203

O

OB
Meaning, 430
OB 40, 91, 222
Start information, 223
OB 82, 91, 222
OP
Meaning, 430
Operating conditions, 24
Operating state
Controlling, 360
the CPU, 190
Operational limit, 192
Operator controls, 43
Function, 45
IM 463-2, 342
Operator controls and display elements
IM 460-0 and IM 461-0, 324

IM 460-3 and IM 461-3, 331
PS 405 10A and PS 405 10A R, 72, 74
PS 405 20A, 76, 78
PS 405 4A, 70
PS 407 10A and PS 407 10A R, 58, 61
PS 407 20A, 64, 66
PS 407 4A, 52, 55
Receive IM, 325, 332
Send IM, 325
Operator controls and indicators
IM 460-1 and IM 461-1, 328
PS 405 4A, 68
Receive IM, 329, 335
Send IM, 328, 332, 335
The 120/230 VAC fan subassembly, 375
Optimum
Signal propagation delays, 104
Order number
6ES7 400-1JA01-0AA0, 29
6ES7 400-1JA11-0AA0, 29
6ES7 400-1TA01-0AA0, 29
6ES7 400-1TA11-0AA0, 29
6ES7 400-2JA00-0AA0, 31
6ES7 400-2JA10-0AA0, 31
6ES7 401-1DA01-0AA0, 34
6ES7 401-2TA01-0AA0, 33
6ES7 403-1JA01-0AA0, 35
6ES7 403-1JA11-0AA0, 35
6ES7 403-1TA01-0AA0, 35
6ES7 405-0KA01-0AA0, 72
6ES7 405-0KA02-0AA0, 74
6ES7 405-0KR00-0AA0, 72
6ES7 405-0KR02-0AA0, 74
6ES7 405-0RA01-0AA0, 76
6ES7 405-0RA02-0AA0, 78
6ES7 407-0DA01-0AA0, 52
6ES7 407-0DA02-0AA0, 55
6ES7 407-0KA01-0AA0, 58
6ES7 407-0KA02-0AA0, 61
6ES7 407-0KR00-0AA0, 58
6ES7 407-0KR02-0AA0, 61
6ES7 407-0RA01-0AA0, 64
6ES7 407-0RA02-0AA0, 66
6ES7 408-0TA00-0AA0, 374
6ES7 408-1TA01-0XA0, 378
6ES7 421-1BL01-0AA0, 95
6ES7 421-1EL00-0AA0, 124
6ES7 421-1FH00-0AA0, 117
6ES7 421-1FH20-0AA0, 120
6ES7 421-5EH00-0AA0, 107
6ES7 421-7BH01-0AB0, 98
6ES7 421-7DH00-0AB0, 110
6ES7 422-1BH11-0AA0, 127
6ES7 422-1BL00-0AA0, 135
6ES7 422-1FF00-0AA0, 143
6ES7 422-1FH00-0AA0, 147
6ES7 422-1HH00-0AA0, 156
6ES7 422-5EH00-0AB0, 151
6ES7 422-5EH10-0AB0, 130
6ES7 422-7BL00-0AB0, 138
6ES7 431-0HH00-0AB0, 259
6ES7 431-1KF00-0AB0, 224
6ES7 431-1KF10-0AB0, 232
6ES7 431-1KF20-0AB0, 248
6ES7 431-7KF00-0AB0, 298
6ES7 431-7KF10-0AB0, 287
6ES7 431-7QH00-0AB0, 268
6ES7 432-1HF00-0AB0, 311
6ES7 460-0AA01-0AB0, 324
6ES7 460-1BA00-0AB0, 328
6ES7 460-1BA01-0AB0, 328
6ES7 460-3AA01-0AB0, 331
6ES7 460-4AA01-0AB0, 334
6ES7 461-0AA01-0AA0, 324
6ES7 461-1BA00-0AA0, 328
6ES7 461-1BA01-0AA0, 328
6ES7 461-3AA01-0AA0, 331
6ES7 461-4AA01-0AA0, 334
6ES7 467-5FJ00-0AB0, 357
6ES7 467-5GJ00-0AB0, 357
6ES7 467-5GJ01-0AB0, 357
6ES7 467-5GJ02-0AB0, 357
6ES7 408-1TB00-0XA0, 375
IM 463-2, 339
Power supply modules, redundant, 39
Order numbers
Spare parts, 421
OS
Meaning, 430
Output
Analog output module, 200
Output of analog values
STEP 7 blocks, 161
Output range
Analog output module, 200
Output ranges
SM 432, AO 8 x 13 Bit, 318
Output type
Analog output module, 200
Output values
Dependencies, 143
Overflow
Analog input module, 221

Overload
On 24 V, 48
On 5 V, 48

P

Parameter assignment
Analog modules, 196
IM 460-0 and IM 461-0, 325
IM 460-1 and IM 461-1, 329
IM 460-3 and IM 461-3, 332
IM 460-4 and IM 461-4, 335
to digital modules, 83
User program, 389
Parameter assignment error
Analog input module, 220
Digital module, 89
LED, 281
SM 431, AI 16 x 16 Bit, 281
SM 431, AI 8 x 16 Bit, 309
Parameters
Analog input module, 198, 397
Analog output module, 200
Data record, 389
Digital input module, 85, 391
Digital output module, 86, 394
Dynamic, 83, 196
Editing in the user program, 83, 196
SM 421, DI 16 x DC 24 V, 103
SM 421, DI 16 x UC 24/60 V, 114
SM 421, DO 16 x DC 20-125 V/1.5 A, 134
SM 422, DO 16 x AC 20-120 V/2 A, 155
SM 422, DO 32 x DC 24 V/0.5 A, 142
SM 431, AI 8 x RTD x 16 bit, 294
SM 431, AI 16 x 13 Bit, 265
SM 431, AI 16 x 16 Bit, 279
SM 431, AI 8 x 13 Bit, 230
SM 431, AI 8 x 14 Bit, 242, 254
SM 431, AI 8 x 16 Bit, 305
SM 432, AO 8 x 13 Bit, 317
Static, 83, 196
Parameters, modifiable, 389
PARM_MOD
SFC 57, 389
PG
Meaning, 430
PII
Meaning, 430
Pin assignment
RS 485 repeater, 386
Pin assignments
Cable 721, 351
PIO
Meaning, 430
Plant changes in runtime, 84
PLC
Meaning, 430
Plug in
Cable, 344
Position of operator control and display elements
IM 460-4 and IM 461-4, 334
potential difference
with analog input modules, 201
Potential difference, 341
Power module
PS 405 10A, 72, 74
PS 405 10A R, 72, 74
PS 405 20A, 76, 78
PS 405 4A, 70
PS 407 10A, 58, 61
PS 407 10A R, 58, 61
PS 407 20A, 64, 66
PS 407 4A, 52, 55
Power supply module
Invalid slot, 38
PS 405 4A, 68
Power supply modules
Error messages, 46
Features, 37
Functions, 37
Power supply, redundant
Design, 39
Features, 39
Prepare
Cable, 344
PROFIBUS DP, 359
Cable Lengths, 363
PROFIBUS DP master interface, 357
Properties
Analog output modules, 163
SM 421, DI 16 x 24 V DC, 98
SM 421, DI 16 x UC 120/230 V, 120
SM 421, DI 16 x UC 24/60 V, 110
SM 421, DI 32 x UC 120 V, 124
SM 422, DO 16 x DC 24 V/2 A, 127
SM 422, DO 32 x DC 24 V/0.5 A, 135, 138
SM 422, DO 8 x AC 120/230 V/5 A, 143
SM 431, AI 8 x 13 bit, 224
SM 431, AI 8 x 14 bit, 232, 248
SM 431, AI 8 x 16 bit, 298
SM 432, AO 8 x 13 bit, 311
SM 422, DO 16 x AC 120/230 V/2 A, 147
SM 422, DO 16 x UC 30/230 V/Rel. 5 A, 156
SM 431, AI 16 x 13 bit, 259

SM 431, AI 8 x RTD x 16 bit, 287
SM 431; AI 16 x 16 bit, 268
Protection class, 26
Protective measures
Avoiding contact, 427
Discharge of static electricity, 427
Grounding, 427
PS
Meaning, 430
PS 405 4A
Operator controls and indicators, 68
Specifications, 68
Technical specifications, 70
PS 407
Technical specifications 10A, 59, 62
PS 407 10A R
Technical specifications, 59, 62
PS 407 20A
Technical specifications, 65, 67
PS 407 4A
Technical specifications, 53, 56
PS 405 10A
Technical specifications, 72, 74
PS 405 10A and PS 405 10A R
Operator controls and display elements, 72, 74
PS 405 10A R
Technical specifications, 72, 74
PS 405 20A
Operator controls and display elements, 76, 78
PS 405 20A technical specifications, 76, 78
PS 405 4A
Operator controls and display elements, 70
PS 407 10A and PS 407 10A R
Operator controls and display elements, 58, 61
PS 407 20A
Operator controls and display elements, 64, 66
PS 407 4A
Operator controls and display elements, 52, 55
Pulse-shaped interference, 20

Q

QI
Meaning, 430
QV
Meaning, 430

R

Rack
CR2, 33
CR3, 34
Design, 27
ER1, 35
ER2, 35
Functions, 27
UR2, 29
UR2-H, 31
Rack number
Changing, 326
Radio frequency interference
Emission of, 21
RAM
Meaning, 430
RAM error
Analog input module, 220
Rating plate, 13
RC network, 384
Reading
Diagnostic messages, 87, 218
Reading analog values
STEP 7 blocks, 161
Receive IM
Operator controls and display elements, 325, 332
Operator controls and indicators, 329, 335
REDF
Meaning, 430
Reducing
Vibrations, 24
Redundant operation, 39
Redundant power supply modules, 39
Reference channel error
Analog input module, 221
Testing, 286
Reference junction
Analog input module, 199
Reference junction temperature for thermocouples
Compensating, 211
Reference temperature
Analog input module, 199
Relay modules
cULus approval, 16
Relay output module
Features, 82
SM 422, DO 16 x UC 30/230 V/Rel.5 A, 156
Repeater see RS 485 repeater, 381
Replugging
Measuring range module, 187
Representation of analog value
for resistance thermometer Cu 10 Climatic, 176
Representation of analog values, 164
Binary representation of input ranges, 167
binary representation of output ranges, 182

for ±1 V to ±10 V voltage measuring range, 169
for ±25 to ±500 V voltage measuring range, 169
For analog input channels, 166
for analog output channels, 182
for resistance thermometer Cu 10 Climatic, 176
for resistance thermometer Cu 10 standard, 176
for resistance thermometer Ni x00 Standard, 175
for resistance thermometer Pt x00 Climatic, 174, 175
for resistance thermometers Pt 100, 200, 500, 1000, 174
for resistance-type sensors from 48 Ω to 6 kΩ, 173
for thermocouple type E, 177
for thermocouple type L, 179
for thermocouple type N, 179
for thermocouple type T, 180
for thermocouple type U, 181
for thermocouple types R, S, 180
for thermocouples type B, 177
for thermocouples type J, 178
for thermocouples type K, 178
for voltage measuring ranges, 169
for voltage output ranges, 184
for voltage output ranges ± 10 V, 184
in current measuring ranges 0 to 20 mA, 171
in current measuring ranges 4 to 20 mA, 172
in the 0 to 20 mA and 4 to 20 mA current output ranges, 185
in the 0 V to 10 V and 1 V to 5 V voltage measuring ranges, 184
in the 1 V to 5 V and 0 V to 10 V voltage measuring ranges, 170
in the current output range ±20 mA, 185
in the current output ranges, 185
Representation of analog values in the ±3.2 mA to ±20 mA current measuring ranges, 171
Resistance measurement
SM 431, AI 8 x 14 Bit, 246, 258
Resistance thermometers and resistors
Connecting, 208
Resolution, 165
Response time, 195, 196
Reusing
FOC, 367
RL
Meaning, 430
RS 485 repeater, 381
Application, 382
Connection scheme, 384
Design, 383
grounded, 384
grounded operation, 384
Installation rules, 382
Pin assignment, 386
Specifications, 386
Ungrounded, 384
ungrounded operation, 384
Rules
Connection, 321
Run time calibration error
Analog input module, 221

S

S-
Meaning, 430
S +
Meaning, 430
S5 expansion unit
Setting, 347
S5 interface modules, 340
S5 modules
Addressing, 341
Configuration, 349
S7 functions, 359
S7-400
Accessories, 421
Spare parts, 421
Safety requirements
Installation, 19
SCL
Meaning, 430
Scope
of the manual, 3
Segment
Cable length, 382
Selecting
Cable length, 345
Interface, 344
Send IM
Operator controls and display elements, 325
Operator controls and indicators, 328, 332, 335
Sensor
Supply voltage, 205
Sensor supply missing
Digital input module, 85
Digital module, 90
Sensors
electrically isolated, 201
Non-isolated, 202
Setting
Address area, 348

Measuring range module, 186
S5 expansion unit, 347
Settling time, 195
SFB
Meaning, 430
SFC
Meaning, 430
SFC 51, 91, 222
SFC 55 WR_PARM, 389
SFC 56 WR_DPARM, 389
SFC 57 PARM_MOD, 389
SFC 59, 91, 222
Shielding clamps, 379
Shipping, 23
Short-circuit
Vs Sensor supply, 105
Short-circuit to L+
Digital module, 89
Digital output module, 86
Short-circuit to M
Analog input module, 220
Digital module, 89
Digital output module, 86
Sign
Analog value, 165
Meaning, 431
Signal modules
Diagnostic data, 399
Signal propagation delays
Optimum, 104, 115
Signaling concept, 378
Sinusoidal interference, 21
SM
Meaning, 430
SM 421, DI 16 x 24 V DC
Properties, 98
Technical specifications, 100
SM 421, DI 16 x AC 120 V
Features, 107
Specifications, 108
Wiring, 108
SM 421, DI 16 x DC 24 V
Diagnostic data, 401
Parameters, 103
SM 421, DI 16 x UC 120/230 V
Features, 117
Properties, 120
SM 421, DI 16 x UC 24/60 V
Diagnostic data, 403
Properties, 110
SM 421, DI 32 x 24 V DC
Connection and circuit diagram, 96
Technical specifications, 96
SM 421, DI 32 x UC 120 V
Properties, 124
SM 421, DI 16 x UC 24/60 V
Parameters, 114
SM 421, DO 16 x DC 20-125 V/1.5 A
Parameters, 134
SM 422, DO 16 x AC 20-120 V/2 A
Diagnostic data, 411
SM 422, DO 16 x DC 20-125 V/1.5 A
Diagnostic data, 406
SM 422, DO 16 x DC 24 V/2 A
Properties, 127
SM 422, DO 32 x DC 24 V/0.5 A
Connection and circuit diagram, 136, 139
Diagnostic data, 408
Properties, 135, 138
Technical specifications, 136, 139
SM 422, DO 8 x AC 120/230 V/5 A
Properties, 143
SM 422, DO 16 x AC 20-120 V/2 A
Features, 151
Parameters, 155
Specifications, 152
Wiring diagram, 152
SM 422, DO 16 x DC 20-125 V/1.5 A
Features, 130
Specifications, 131
Wiring diagram, 131
SM 422, DO 32 x DC 24 V/0.5 A
Parameters, 142
SM 431, AI 8 x 13 bit
Block diagram, 224
Connection diagram, 226
Properties, 224
Technical specifications, 227
SM 431, AI 8 x 14 bit
Block diagram, 233, 249
Connection diagram, 234, 250
Properties, 232, 248
Technical specifications, 235, 251
SM 431, AI 8 x 16 bit
Properties, 298
SM 431, AI 8 x RTD x 16 bit
Diagnostic data, 415
Displaying parameter assignment errors, 296
Measuring methods, 297
Measuring ranges, 297
Parameters, 294

SM 431, AI 16 x 13 Bit
Measuring methods, 266
Measuring range modules, 265
Measuring ranges, 267
Parameters, 265
SM 431, AI 16 x 16 Bit
Diagnostic data, 413
Measuring methods, 283
Measuring range modules, 279
Measuring ranges, 285
Parameter assignment error, 281
Parameters, 279
Wire break monitoring, 286
SM 431, AI 8 x 13 Bit
Measuring methods, 231
Measuring ranges, 231
Parameters, 230
SM 431, AI 8 x 14 Bit
Measuring methods, 244, 257
Measuring range modules, 242, 254
Measuring ranges, 247, 258
Parameters, 242, 254
Resistance measurement, 246, 258
SM 431, AI 8 x 16 Bit
Diagnostic data, 418
Measuring methods, 310
Measuring ranges, 310
Parameter assignment error, 309
Parameters, 305
SM 432, AO 8 x 13 bit
Properties, 311
SM 432, AO 8 x 13 Bit
Configuration of analog output circuits, 318
Output ranges, 318
Parameters, 317
SM 421, DI 16 x 24 V DC
Connection and circuit diagram, 99
SM 421, DI 16 x UC 120/230 V
Specifications, 118
Wiring and block diagrams, 118
SM 421, DI 16 x UC 120/230 V
Connection and circuit diagram, 121
SM 421, DI 16 x UC 24/60 V
Connection and circuit diagram, 111
Technical specifications, 111
SM 421, DI 16 x UC 120/230 V
Technical specifications, 121
SM 421, DI 32 x UC 120
Connection and circuit diagram, 125
SM 421, DI 32 x UC 120 V
Technical specifications, 125
SM 422, DO 16 x AC 120/230 V/2 A
Properties, 147
SM 422, DO 16 x DC 24 V/2 A
Connection and circuit diagram, 128
Technical specifications, 128
SM 422, DO 16 x UC 30/230 V/Rel. 5 A
Technical specifications, 157
SM 422, DO 16 x UC 30/230 V/Rel. 5 A
Properties, 156
SM 422, DO 16 x AC 120/230 V/2 A
Connection and circuit diagram, 148
Technical specifications, 148
SM 422, DO 8 x AC 120/230 V/5 A
Connection and circuit diagram, 144
Technical specifications, 144
SM 431, AI 8 x 16 bit
Block diagram, 312
Connection diagram, 313
Technical specifications, 314
SM 431, AI 16 x 13 bit
Block diagram, 260
Connection diagram, 261
Properties, 259
Technical specifications, 262
SM 431, AI 8 x 16 bit
Block diagram, 299
Connection diagram, 300
Technical specifications, 301
SM 431, AI 8 x RTD x 16 bit
Block diagram, 288
Connection diagram, 290
Properties, 287
Technical specifications, 291
SM 431; AI 16 x 16 bit
Block diagram, 269
Connection diagram, 270
Properties, 268
Technical specifications, 271
Smoothing of analog input values, 193
Analog input module, 199
Spare parts
Order numbers, 421
S7-400, 421
Specifications
24 VDC fan subassembly, 379
Backup battery, 42
Channel cable, 374
CR2, 33
CR3, 34
ER1 and ER2, 36
IM 460-1 and 461-1, 330
IM 460-4 and 461-4, 336

IM 463-2, 355
IM 467, 368, 370
PS 405 4A, 68
RS 485 repeater, 386
SM 421, DI 16 x AC 120 V, 108
SM 422, DO 16 x AC 20-120 V/2 A, 152
SM 422, DO 16 x DC 20-125 V/1.5 A, 131
SM 421, DI 16 x UC 120/230 V, 118
The 120/230 VAC fan subassembly, 376
UR1, 30
UR2, 30
UR2-H, 32
SSL
Meaning, 430
Standards, 13
Start information
OB 40, 223
Static parameters, 83
STEP 7 blocks
for analog functions, 161
Step response
Interference frequency suppression 10 Hz, 307
Interference frequency suppression 400 Hz, 308
Interference frequency suppression 50 Hz, 307
Interference frequency suppression 60 Hz, 308
STL
Meaning, 429
STOP mode
Analog input module, 220
Digital module, 89
Storage, 23
Backup battery, 23
Modules, 23
Substitute a value
Digital input module, 85
Digital output module, 86
Substitute a value "1"
Digital input module, 85
Digital output module, 86
Supply voltage
Failure, 105
Sensor, 205
support
Additional, 4
SV
Meaning, 429

T

TD
Meaning, 430
Technical specifications
IM 460-0 and 461-0, 326
IM 460-3 and 461-3, 333
PS 405 10A, 72, 74
PS 405 10A R, 72, 74
PS 405 20A, 76, 78
PS 405 4A, 70
PS 407 10A, 59, 62
PS 407 10A R, 59, 62
PS 407 20A, 65, 67
PS 407 4A, 53, 56
SM 421, DI 16 x 24 V DC, 100
SM 421, DI 32 x 24 V DC, 96
SM 422, DO 32 x DC 24 V/0.5 A, 136, 139
SM 431, AI 8 x 13 bit, 227
SM 431, AI 8 x 14 bit, 235, 251
SM 421, DI 16 x UC 24/60 V, 111
SM 421, DI 16 x UC 120/230 V, 121
SM 421, DI 32 x UC 120 V, 125
SM 422, DO 16 x DC 24 V/2 A, 128
SM 422, DO 16 x UC 30/230 V/Rel. 5 A, 157
SM 422, DO 16 x AC 120/230 V/2 A, 148
SM 422, DO 8 x AC 120/230 V/5 A, 144
SM 431, AI 8 x 16 bit, 314
SM 431, AI 16 x 13 bit, 262
SM 431, AI 8 x 16 bit, 301
SM 431, AI 8 x RTD x 16 bit, 291
SM 431; AI 16 x 16 bit, 271
Technical support, 5
Temperature coefficient
Analog input module, 199
temperature unit
Analog input module, 199
Terminator, 321
IM 463-2, 353
Test voltages, 26
Testing
Mechanical ambient conditions, 25
Reference channel error, 286
Underflow, 287
The 120/230 V DC fan subassembly
Installation, 376
The 120/230 VAC fan subassembly
Fuse, 375
Operator controls and indicators, 375
Specifications, 376
Thermal voltage, 210
Thermocouple
Connecting to an analog input module, 210
Design, 210
Operating principle, 210

Thermocouples to resistance thermometers
Connecting, 213
Training center, 5

U

UC
Meaning, 430
UCM
Meaning, 430
UH
Meaning, 431
Uiso
Meaning, 431
Underflow
Analog input module, 221
Testing, 287
Ungrounded operation
RS 485 repeater, 384
UR1
Design, 29
Specifications, 30
UR2
Specifications, 30
UR2-H
Design, 31
Specifications, 32
User program
Parameter assignment, 389
USR
Meaning, 431

V

Vibrations, 24
Reducing, 24
Voltage sensors
Connecting, 204
Vs
Meaning, 431
Vs Sensor supply
Short-circuit, 105

W

Wire break
Analog input module, 220
Digital module, 90
Wire break monitoring
Analog input module, 198
Digital input module, 85
Digital output module, 86
Ensuring, 103, 114
SM 431, AI 16 x 16 Bit, 286
Wiring
24 VDC fan subassembly, 378
SM 421, DI 16 x AC 120 V, 108
Wiring and block diagrams
SM 421, DI 16 x UC 120/230 V, 118
Wiring diagram
SM 422, DO 16 x AC 20-120 V/2 A, 152
SM 422, DO 16 x DC 20-125 V/1.5 A, 131
WR_DPARM
SFC 56, 389
WR_PARM
SFC 55, 389