MOORE INDUSTRIES WORLDWIDE

Demand Moore Reliability

SPA² IS Programmable Limit Alarm Trips with Intrinsically Safe Field Connections

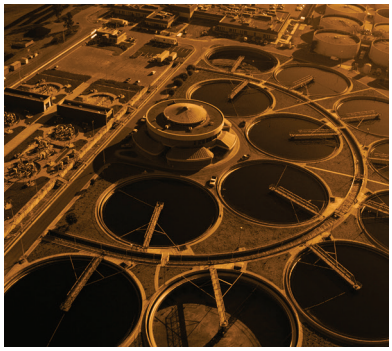

SPA²IS

Programmable Limit Alarm Trips with Intrinsically Safe Field Connections

User's Manual

225-775-00J
July 2025

www.miinet.com

Customer Support

MOORE INDUSTRIES WORLDWIDE

Demand Moore Reliability

Customer Support

Moore Industries is recognized as the industry leader in delivering top quality to its customers in products and services. We perform a sequence of stringent quality assurance checks on every unit we ship. If any Moore Industries product fails to perform up to rated specifications, call us for help. Our highly skilled staff of trained technicians and engineers pride themselves on their ability to provide timely, accurate, and practical answers to your process instrumentation questions. Our headquarters and other facilities phone numbers are listed below.

There are several pieces of information that can be gathered before you call the factory that will help our staff get the answers you need in the shortest time possible. For fastest service, gather the complete model and serial number(s) of the problem unit(s) and the job number of the original sale.

Locations

World Headquarters

16650 Schoenborn Street
North Hills, California
91343-6196, U.S.A.
Tel: (818) 894-7111
Fax: (818) 891-2816
E-mail: info@miinet.com
TOLL FREE: 1-800-999-2900
www.miinet.com

China

Room 902, Building 8, West Zone,
Zhaoshang HongQiao Gongguan,
Phase II, Lane 299,
Shanghan Road, Xujing Town,
Qingpu District, Shanghai, China
Postal Code 201702
Tel: 86-21 62491499
Fax: 86-21 62490635
E-mail: sales@mooreind.sh.cn
www.miinet.com

Europe

1 Lloyds Court, Manor Royal,
Crawley
W. Sussex RH10-9QU
United Kingdom
Tel: 01293 514488
Fax: 01293 387752
FREE PHONE: 0800 525107
sales@mooreind.com
www.miinet.com/uk

Benelux

Kontichsesteenweg 38A A01
2630 Aartselaar
Belgium
Tel: 03/448.10.18
Fax: 03/440.17.97
info@mooreind.be
www.miinet.com/dbe

Australia

Sydney, NSW
3/1 Resolution Drive
Caringbah, New South Wales
2229
Australia
Tel: (02) 8536-7200
Fax: (02) 9525-7296
sales@mooreind.com.au
www.miinet.com/au

Perth, WA
TOLL FREE: 1-800-784-899
sales@mooreind.com.au
www.miinet.com/au

www.miinet.com

Safety Messages

Please read this manual in its entirety. It should answer most of your questions. For personal and system safety, and for optimum product performance, make sure you thoroughly understand the contents before installing, using, or maintaining this product. Should you still have questions please visit our web site at www.miinet.com or contact any of our sales/support offices nearest you.

Your safety and the safety of others is very important. We have provided many important safety messages in this manual. Please read these messages carefully. These safety messages alert you to potential hazards that could hurt you or others or render damage to units.

All Moore Industries instrumentation should only be used for the purpose and in the manner described in this manual. If you use this product in a manner other than that for which it was intended, unpredictable behavior could ensue with possible hazardous consequences.

Each safety message is associated with a safety alert symbol. These symbols are found in the throughout the manual. The definition of these symbols is described below:

Pay particular attention wherever you see the following symbols:

Note – Information that is helpful for a procedure, condition or operation of the unit.

Caution – Hazardous procedure or condition that could damage or destroy the unit.

Warning – Hazardous procedure or condition that could injure the operator.

Qualified Personnel

The Moore Industries' product/systems described in this manual may be operated only by personnel qualified for the specific task in accordance with the relevant documentation, in particular its warning notices and safety instructions. Qualified personnel are those who, based on their training and experience, are capable of identifying risks and avoiding potential hazards when working with these Moore Industries' products/systems.

Proper use of Moore Industries products

Moore Industries' products may only be used for the applications described in the catalog and in the relevant technical documentation. If products and components from other manufacturers are used, these must be recommended or approved by Moore Industries' . Proper transport, storage, installation, assembly, commissioning, operation and maintenance are required to ensure that the products operate safely and without any problems. The permissible ambient conditions must be complied with. The information in the relevant documentation must be observed.

We have reviewed the contents of this publication to ensure consistency with the hardware and/or software described. Since variance cannot be precluded entirely, we cannot guarantee full consistency. However, the information in this publication is reviewed regularly and any necessary corrections are included in subsequent editions. Specifications and information are subject to change without notice.

All product and company names are trademarks™ or registered® trademarks of their respective holders. Use of them does not imply any affiliation with or endorsement by them unless otherwise specified.

CONTENTS

Table of Contents

Section 1 - Introduction 8

Overview 8
Model Numbers and Options 8
Serial Numbers 8
Inputs 8
Outputs 9
Power 9
Options 9
Housing 9
Internal Settings 9
Alarm Terminology 10

Section 2 - Calibration Bench Check 14

Calibration 14
Bench Check 15
Bench Check Procedure 15
Bench Check Procedure 16
Units with the Analog Output Option (-AO) 17

Section 3 - Installation and Wiring 18

Mounting 18
CE Certification-related Guidelines 24
Contact/Load Suppression 24
Installation in Hazardous Locations 25
Special Conditions of Use 26

Section 4: Configuration Front Panel Pushbuttons 27

Main Menu/View Settings 27
Configuring the HLPRG Input 31
Configuring the TPRG Sensor 32
Configuring the Options 34
Scaling the Input 37
Applying Input (Bench Scaling) 39
Input Trimming 40
Configuring the Analog Output (-AO Option) 42
Scaling the Analog Output (-AO Option) 43

Trimming the Analog Output (-AO Option) 44
Configuring the Alarm(s) 47
Password Configuration 59
System Information Menu 60

Section 5: SPA²IS PC Configuration Software 61

Installing the Configuration Software 61
Connecting the SPA²IS to the PC 61
Selecting Model Type 62
PC Configuration Software Summary 64
Status and Tool Bar Legend 65
Configuration Screens 66
Input 66
Alarms 69
Analog Output 73
Scaling 76
Custom Curve 77

Section 6: Operation and Maintenance 79

Operation 79
Maintenance 79

Section 7: SPA²IS Applications 80

Process Heater Temperature Monitoring and Alarming 80
Level Linearization and Control 81
Low Pressure Alarm with spurious trip suppression 82
Overpressure Protection system 83

Section 8: Specifications 84

SPA²IS HLPRG Specifications 84
SPA²IS TPRG Specifications 86

Section 9: Ordering Information 89

Ordering Information 89

Warranty Disclaimer 93

SECTION 1

SPA²IS HLPRG Quickstart Guide

Use the front push-buttons to quickly and easily setup the SPA²IS for your application. After programming your alarm using the diagram below, install the unit into your application using the connection diagram and terminal designation table located in this manual.

Default/Factory Configuration

The following are the default factory settings for your unit.

Input mA, 4-20mA
Display Normal Mode, PV
60Hz Filter
Broken wire enabled, level set to 0.1
Running Average Filter set to 4
All alarms set to Trip High at 12mA with Deadband set to 0
All alarms range set to 4-20mA
All alarms have OOR & Input Failure disabled
All alarms are configured as Fail Safe, latching disabled, 0 delay
AO (if fitted) : Current 4-20mA, fail high, hold duration of 1 second

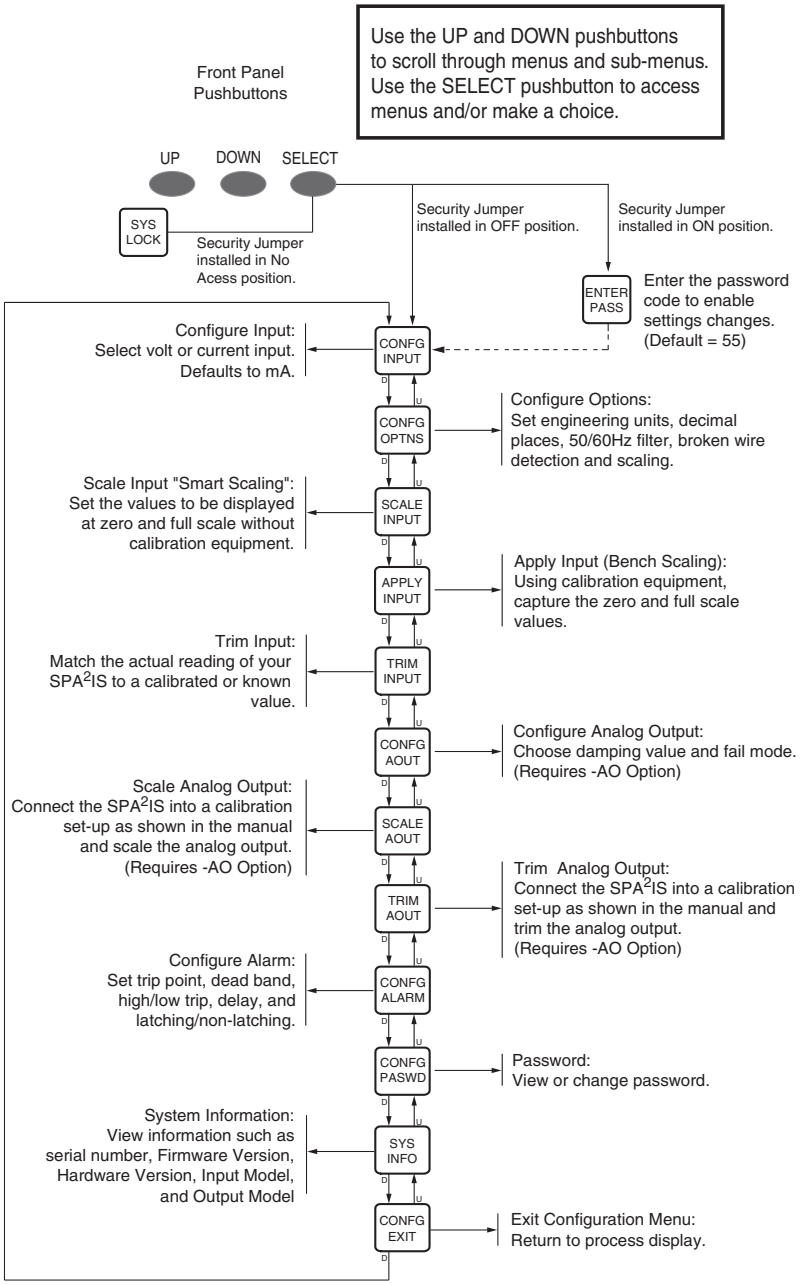

SPA²IS TPRG Quickstart Guide

Use the front pushbuttons to quickly and easily set-up the SPA²IS for your application. After programming your alarm using the diagram below, install the unit into your application using the connection diagrams and terminal designation table located in this manual.

Default/Factory Configuration

The following are the default factory settings for your unit.

Input 4W RTD, 0-100°C
Display Normal Mode, PV, PT 3850
60Hz Filter
Broken wire enabled
Running Average Filter set to 4
All alarms set to Trip High at 50°C with Deadband set to 0
All alarms range set to 0-100
All alarms have OOR & Sensor Failure disabled
All alarms are configured as Fail Safe, latching disabled, 0 delay
AO (if fitted) : Current 4-20mA, fail high, hold duration of 1 second

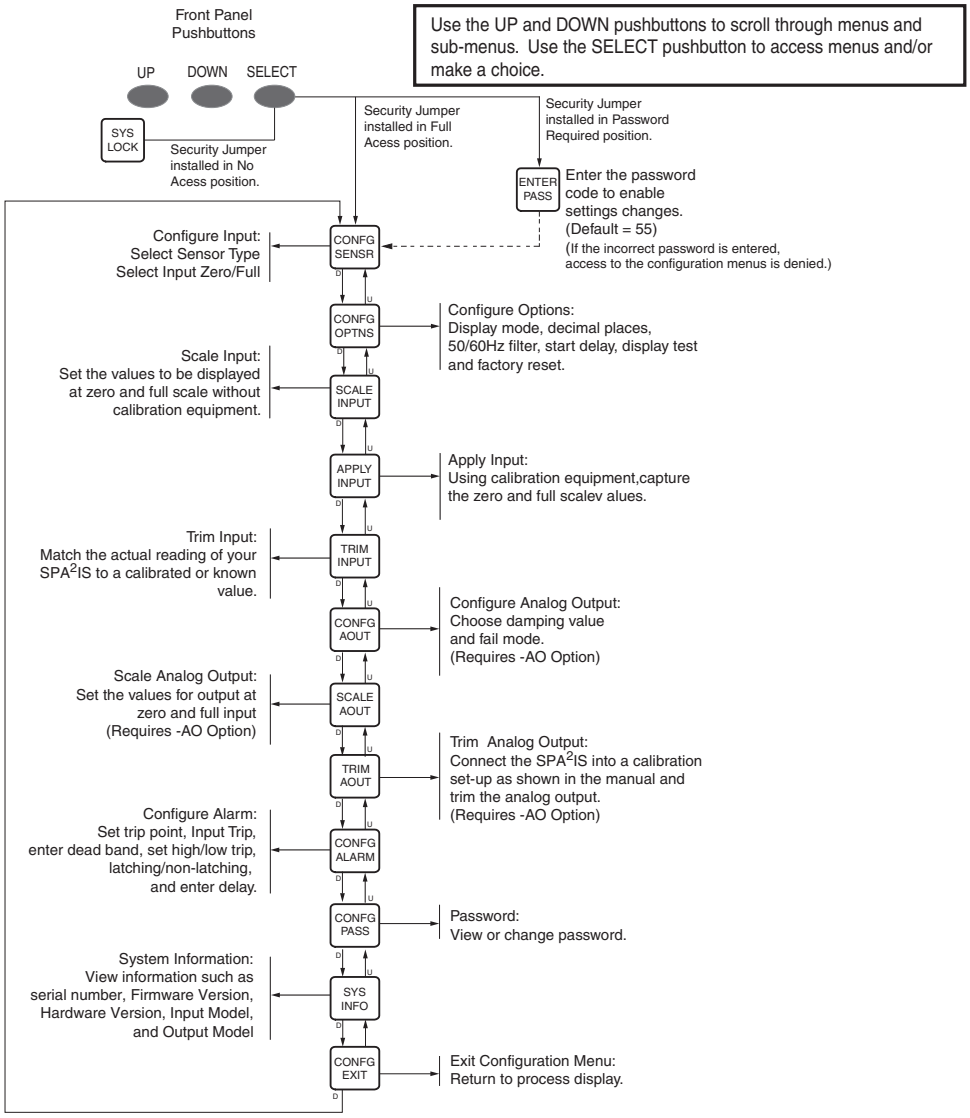

Section 1 - Introduction

The Moore Industries' Programmable Limit Alarm Trips with Associated IS Inputs (SPA²IS) are designed and manufactured to provide a high level of availability for installations normally requiring the use of an intrinsically-safe barrier.

This manual contains information needed to install, operate and maintain this product. When the SPA²IS is used in a hazardous location, please refer to Section 3 of this manual.

Overview

This is the user's manual for Moore Industries' SPA²IS includes the two model types:

HLPRG (high level) - Programmable Current/Voltage Limit Alarm.
TPRG (low level)- Programmable RTD, T/C, Ohms, mV and Potentiometer Limit Alarm Trips.

These instruments can be configured using front panel push buttons and/or a dedicated PC Configuration Program. The SPA²IS monitors a process variable and provides up to four, fully user configurable contact closure outputs that can be individually programmed to trip whenever the input falls outside a user-set high or low trip point. The SPA²IS is typically used to activate a warning light, bell or buzzer; or to initiate a system shutdown. Thus, the instrument acts as a simple, but highly reliable and effective means of monitoring and safe-guarding a process. Detailed information is highlighted within each section on the two models' features, functions, and configuration.

The SPA²IS includes an associated intrinsically-safe input circuit that provides the necessary protection typically afforded by a galvanically isolated intrinsically-safe barrier.

Model Numbers and Options

The following section provides details of the Moore Industries model number and the available options for the SPA2IS.

Moore Industries model numbers for the SPA²IS are structured as follows

SPA2IS / HLPRG / 4PRG / U / -AO [DIN]

Unit / Input / Output / Power / -Options [Housing]

Serial Numbers

Moore Industries uses a system of model and serial numbers to keep track of all of the information on every unit it sells and services. If a problem occurs with your SPA²IS, check for a tag affixed to the unit listing these numbers. Supply the Customer Support representative with this information when calling.

Inputs

HLPRG - High Level Programmable. Programmable by the end-user to accept Current (at any range between 0-50mA) or Voltage (at any range between 0-10Vdc).

TPRG - Temperature Programmable. Programmable by the end-user to accept inputs from 23 RTD types, 9 Thermocouple types, Resistance and Potentiometer devices, and direct Millivolt sources.

Outputs

Alarms

The SPA²IS can be ordered with two (-2PRG) or four (-4PRG) contact closure alarms. Each alarm can be individually programmed.

2PRG

This is a two relay output with 5A@250Vac or 24Vdc, 50/60Hz non-inductive contact rating. The contact arrangement is SPDT. All relay contacts (NO, NC and COM) are available for use. No jumpers are required.

4PRG

This is a four relay output with 5A@250Vac or 24Vdc, 50/60Hz non-inductive contact rating. The contact arrangement is SPDT. All relay contacts (NO, NC and COM) are available for use. No jumpers are required.

Power

U

Universal power. Accepts any power input range of 21.6–125Vdc or 90-260Vac.

Options

Analog Output (-AO)

Analog Output. Scaleable for any range between 0-20mA into 1000 ohms.

FMEDA

Unit comes with Failure Modes, Effects and Diagnostic Analysis (FMEDA) data for evaluating the instrument for suitability for use in a safety-related application.

Housing

[DIN]

DIN-style housing mounts on 35mm (EN50022) Top Hat DIN rails.

[FLB]

Flange mount bracket for wall mounting.

Internal Settings

The password security function of the SPA²IS is controlled by a single jumper inside the unit housing. You will need to remove the left side panel in order to access the jumper (see Figure 3.2. in Section 3).

Alarm Terminology

Before setting up the SPA²IS, or incorporating the unit in your application, Moore Industries suggests that all users take a few moments to become familiar with some of the terms associated with the use of process instrumentation alarms and relays.

Failsafe Alarms - are de-energized when tripped, energized when the process input is at a non-alarm level. Non-failsafe Alarms are energized whenever tripped, de-energized when the process input is at a non-alarm level. The relays in the SPA²IS can be switched from failsafe to non-failsafe at any time by the user.

Normal - is the term used to describe the "shelf-state" of relay contacts. The contacts of a Normally Open relay are open (infinite resistance) when the relay is not energized. The contacts of a Normally Closed relay are open when the relay is energized (closed when not energized).

Note: *Sometimes a non-alarm input level is referred to as being in a "normal" condition. This practice is intentionally avoided in this manual. Do not confuse the term "normal", as in Normally Open or Normally Closed, with a non-alarm input condition. In this manual, "normal" is an exclusive reference to the shelf state or quiescent state of an alarm's relay contacts, whether open or closed.*

Latching and Non-latching Alarms - once tripped, a latching alarm remains in alarm until the input returns to a non-alarm level AND is manually reset (using the MR terminals). Non-latching alarms return to a non-alarm state whenever the process input returns to the Reset Point. The SPA²IS relays can be set by the user to function as either latching or non-latching.

Delay - A delay can be set to avoid false trips. The unit must be in an alarm condition for the delay time before a relay trips.

The following terms relate to **Trip Alarms**:

The **Trip Point** is the process input level at which the user wants an alarm relay to change state, typically going into an alarm condition, or "tripping". In the SPA²IS, the user sets the trip point for each installed relay.

High/Low Alarms - High Alarms trip when the process input goes above the trip point. Low Alarms trip when the process input drops below the trip point. Each of the SPA²IS outputs can be set by the user to function independently as either high or low alarms.

The **Reset Point** is the process input level at which the user wants an alarm relay to change state, typically going from alarm to non-alarm. The reset point is not necessarily the same as the trip point, because most applications call for a buffer zone or *"Deadband"* around the trip point to allow for minute fluctuations in the process input. In the SPA²IS, the reset point is determined by the deadband setting. Latching SPA²IS alarms will not "clear" unless the reset point has been reached or passed AND the manual reset contacts have been shorted. The **Deadband** is the range in which an alarm remains tripped even after the process input has returned to or passed the trip point. Deadband is not required. When it is not incorporated into an alarm application, the trip point and reset point are the same.

Trip Alarms with Reset point and Deadband setting

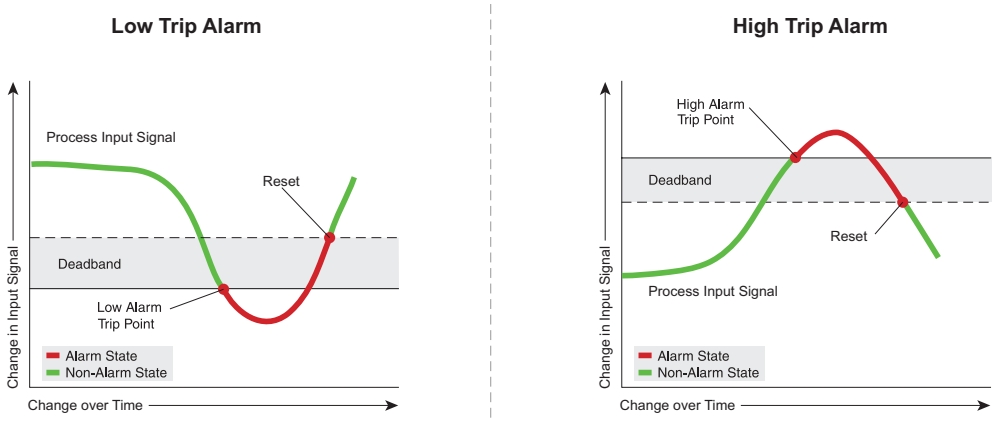

Band Alarm - The Band Alarm is a high and low trip alarm combined. It can be set using low and high trip points or by setting a midpoint and a maximum deviation from that midpoint that is allowed before the alarm trips. Dead Band can also be set for this alarm type.

Band Alarms example

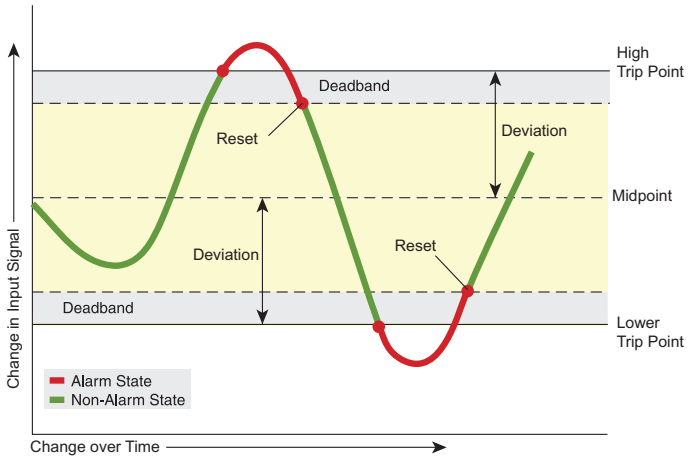

Rate-of-Change and **Stuck Input Alarms** - are used to detect changes or lack of changes in the measured value in units per second.

A **Rate-of-Change Alarm** monitors an input for a change in value with respect to time (Figure below). The alarm is set to trip when the input rate-of-change exceeds a user-selected amount (Delta) over a user-selected time period (Delta Time). This can be set to detect:

- positive rate of change to alarm if the input is rising too fast
- negative rate of change to alarm if the input is falling too fast
- absolute rate of change to alarm if the input rises or falls too fast

Rate-of-Change Alarm Trip.

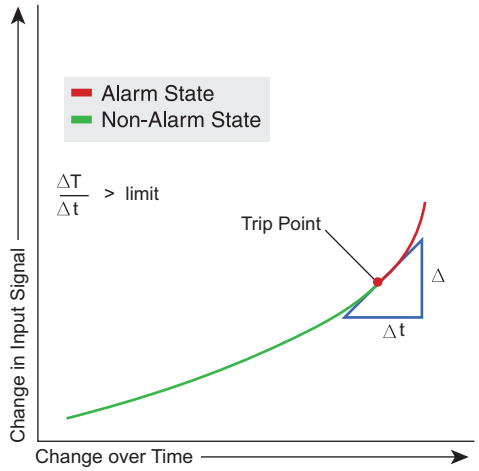

A **Stuck Input Alarm** also monitors an input for a change in value with respect to time (Figure below). The alarm is set to trip when the input does **not** change by a user-selected amount (Delta) over a user-selected time period (Delta Time). To set the correct value for delta and delta time, you need to understand the expected process variations to avoid false trips and the input signal noise and averaging filter settings to prevent missing stuck inputs.

Stuck Input Alarm Trip.

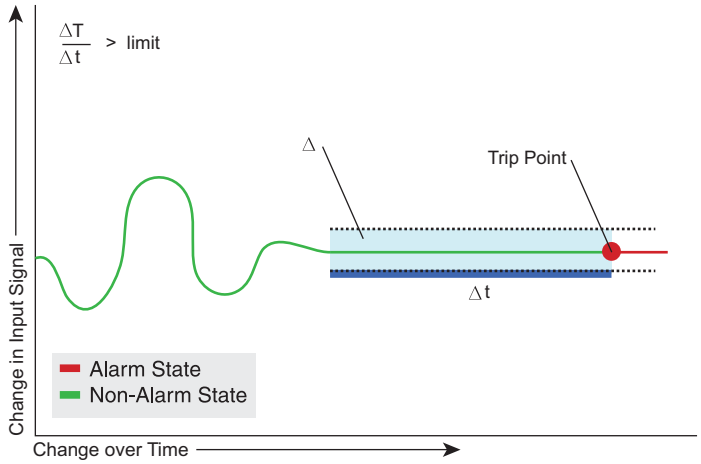

Fault Alarms – There are various types of fault which can be selected to trip a unique alarm or in combination with a trip or rate of change alarm.

Input Saturation is set when the input signal exceeds 110% of calibrated input range.

SPA² Failure is set when there is self diagnosed failure of the unit.

Input/Sensor Failure is set when there is a broken wire on a sensor or an input falls below a set threshold.

Out of Range can be set to detect when the input signal goes outside a user specified range (same as band alarm) threshold. When setting the Out of Range Alarm, the values in Lower Point must be greater than those of the Sensor Lower Limit, and less than those set in Lower Range. When setting the Upper Point, the value must be less than the Sensor Upper Limit, and greater than those set in Upper Range.

Section 2 - Calibration Bench Check

It is recommended that you perform a bench check on your instruments prior to installing them in your application.

Calibration

A true calibration of the SPA²IS can only be performed at Moore Industries using specialized equipment. We recommend that you check the calibration every year and re-calibrate only when necessary.

However, input trimming increases the measurement accuracy of your instrument by matching the reading of its actual input to its scaling. The SPA²IS offers the use of a factory-configured trimming feature ('FCTRY TRIM") or user-set, one-point or two-point ("USER 1 PNT" or "USER 2 PNT") trimming.

Please refer to Section 4 of this manual for instructions to perform Input Trimming via the push button panel or Section 5 using the PC Configuration Software. Likewise, output trimming increases the measurement accuracy of the SPA²IS by calibrating its analog output to the device that is receiving the output. This ensures that the instrument's input is being correctly interpreted.

Please refer to Section 4 of this manual for instructions to perform Output Trimming via the push button panel or Section 5 using the PC Configuration Software.

Table 2.1. *Necessary Equipment for Bench Checking the SPA²IS (HLPRG)*

Device	Specifications
Current and/or Voltage	Variable; Accurate to ±0.05% of unit span
Power Supply	21.6 - 175 Vdc or 90-260Vac
Multimeter	Accurate to ±0.009% of span; e.g., HP Model 3478A

Table 2.2. *Necessary Equipment for Bench Checking the SPA²IS (TPRG)*

Device	Specifications
Variable Input Simulator for Thermocouple, RTD, Millivolt, Potentiometer, or Decade Resistance Box	Variable; Accurate to ±0.05% of unit span
Power Supply	21.6 - 175 Vdc or 90-260Vac
Multimeter	Accurate to ±0.009% of span; e.g., HP Model 3478A

Bench Check

We highly recommend that you perform a bench check of your SPA²IS prior to installing it in the field. This will ensure that the SPA²IS is operating within your expectations or requirements. The bench check is a quick way to determine that your SPA²IS is functioning as expected. As a prelude to performing the bench check you should configure your SPA²IS as it is to be used in your final application.

Refer to Section 4 for the SPA²IS Front Panel Configuration instructions.These instructions are used if you are configuring your SPA²IS by using the front panel push buttons. Section 5 contains the instructions for configuring your SPA²IS using the SPA²IS PC Configuration software. The equipment necessary to perform a bench check can be found in Table 2.1 or Table 2.2.

Bench Check Procedure

Current or Voltage Input (HLPRG):

1. In order to provide an input to your SPA²IS HLPRG you will need to use an appropriate input source. By example – if you plan to use your SPA²IS with a current (mA) input you will need to use a milliamp source to provide the appropriate input during your bench check. The same goes for a voltage source. Use whichever input source is correct for your intended application. Please see Figure 2.1 for the correct input connections.
2. Power Input:

   Connect the appropriate power source as shown in Figure 2.1.

Figure 2.1. *SPA²IS (HLPRG) Bench Check*

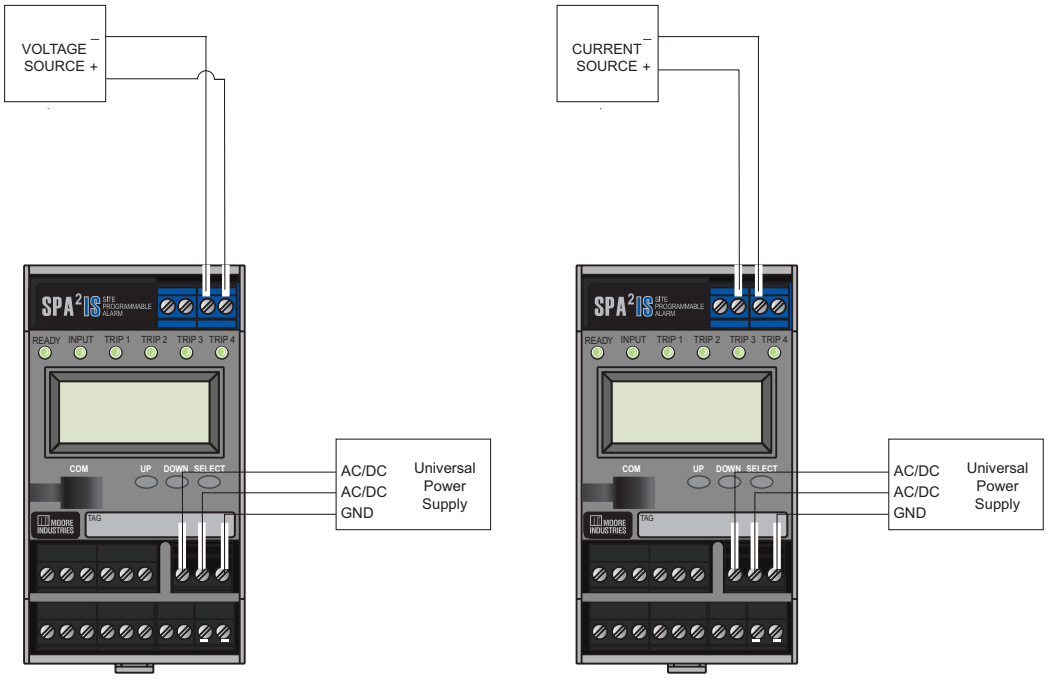

3. Set your input source to the low end of your configured input span. By example – if your input is configured for a current (mA) and your input range is set for 4-20mA then use a current source and set it to 4mA. Verify that the SPA²IS is reading 4mA on its display window.
4. Set your input source to the high end of your configured input span and verify that the SPA²IS display window correctly reflects the input.
5. Temporarily remove one of your input connections to verify that the Broken Wire feature is working.
6. Alarm Relays:

   By adjusting your input up and down you can confirm the operation of the Alarm Relays. Use your multimeter (set to ohms) to verify the state of the relay contacts.

Bench Check Procedure

Sensor Input (TPRG):

1. In order to provide an input to your SPA²IS TPRG you will need to use an appropriate input simulator. By example – if you plan to use your SPA²IS with a thermocouple input you will need to use a thermocouple simulator to provide the appropriate input during your bench check. The same goes for an RTD simulator, a millivolt source, a potentiometer, or a decade resistance box. Use whichever input source is correct for your intended application. Please see Figure 2.2 for the correct sensor input connections.
2. Power Input:
   Connect the appropriate power source as shown in Figure 2.3.

Figure 2.2. *SPA²IS (TPRG) Sensor Hook up guide*

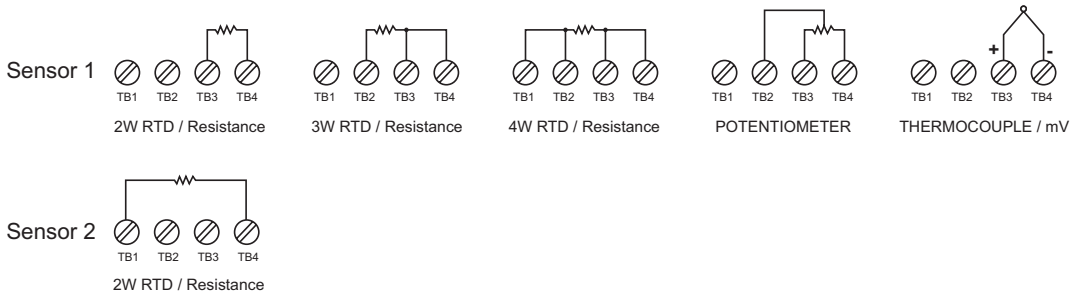

Note: *When using 2 input sensors, sensor 1 is limited to 2-wire and/or 3-wire RTD/resistance. 4-wire sensors cannot be used.*

3. Set your input simulator to the low end of your configured input span. By example – if your input is configured for a Type T thermocouple and your input range is set for 0-100° C then use a Type T thermocouple simulator and set it to simulate 0° C. Verify that the SPA²IS is reading 0° C on its display window.
4. Set your input simulator to the high end of your configured input span and verify that the SPA²IS display window correctly reflects the input.
5. Temporarily remove one of your input connections to verify that the Broken Wire feature is working.
6. Alarm Relays:

   By adjusting your input up and down you can confirm the operation of the Alarm Relays. Use your multimeter (set to ohms) to verify the state of the relay contacts.

Figure 2.3. *SPA²IS (TPRG) Bench Check*

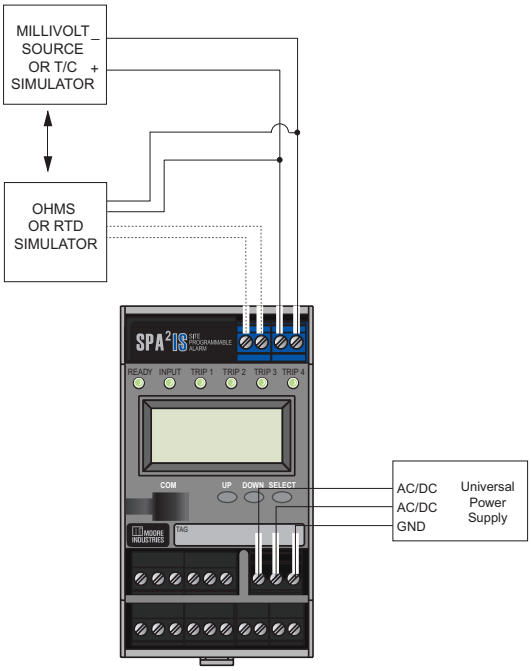

Units with the Analog Output Option (-AO)

Note: *Even though 0-20mA is the range of the analog output it can be scaled by the user for a narrower range (such as 4-20mA).*

1. Connect the analog output as per Figures 3.1 and 3.2.
2. When testing the milliamp output it is best to use a 250 ohm precision resistor across the output terminals (as shown in Figures 3.1 and 3.2). Then you can use your multimeter (set to voltage) to read the voltage drop across the resistor. Hence a reading of 1V means that the analog output is putting out 4mA, and a reading of 5V equates to a 20mA output.
3. Set your input simulator to the low end of your configured input span. Verify that the analog output is correct. By example – a 1V reading across your 250 ohm resistor equates to a 4mA output.
4. Set your input simulator to the high end of your configured input span. Verify that the analog output is correct. By example – a 5V reading across your 250 ohm resistor equates to a 20mA output.

You have now confirmed that your SPA²IS is operating correctly and can now be confidently installed into your application.

SECTION 3

Section 3 - Installation and Wiring

Instructions in this section and others may require special precautions to ensure the safety of the personnel performing the operations. Notes, Cautions and Warnings that may cause potential safety issues are indicated throughout this manual by symbols, please refer to Page 3 of this manual to view and familiarize yourself with these safety message symbols.

Mounting

The SPA²IS is housed in a DIN case that can be mounted on 35mm Top-Hat (EN50022) DIN-rail. To mount the SPA²IS on a Top-Hat DIN-rail, seat the upper extrusion on the unit back panel over the top lip of the rail and pivot downward until the housing locks into place. When mounting multiple units, like a rack or cabinet, make sure to allow adequate vertical spacing for pivoting the units.

Removal

To remove the SPA²IS from DIN rail you will need a simple tool such as a straight blade screwdriver. Insert the blade of the screwdriver into cavity at the bottom of the locking mechanism and rotate it. This will release the locking mechanism from DIN rail and allow you to remove the SPA²IS.

Making the Electrical Connections

The SPA²IS is an associated apparatus which can be located in a non classified or Class I Div 2/Zone 2 area with the input terminals connected to equipment in Zone 0/Intrinsically Safe (I.S.) areas.

SPA²IS cables need to be segregated; non-I.S. cables (i.e. power, relays, MR and AO wiring) should be routed away from I.S. cables (input connections) using suitable cable trunking or other mechanical means.

ASSOCIATED I.S. INPUT WIRING

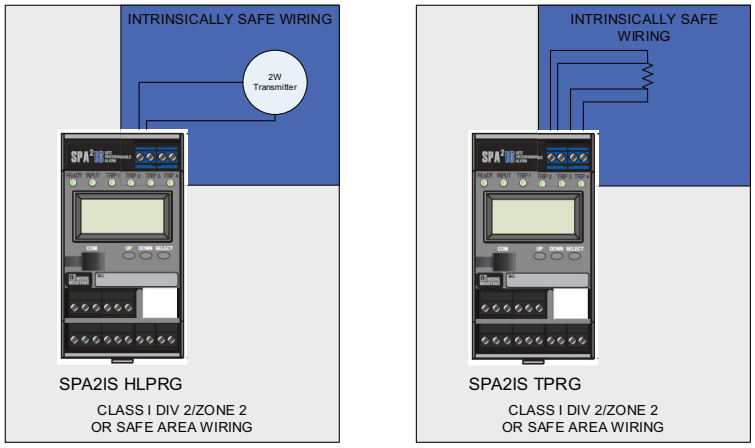

Please refer to Tables 3.1-3.2 for detailed electrical connections.

Warning: *If the unit is installed in a hazardous location and/or the input terminals are connected into the intrinsically safe area then please follow the Special Conditions of Use in the following sections and installation diagrams in the Certification Information section.*

Table 3.1. *SPA²IS (HLPRG) Terminal Designations*

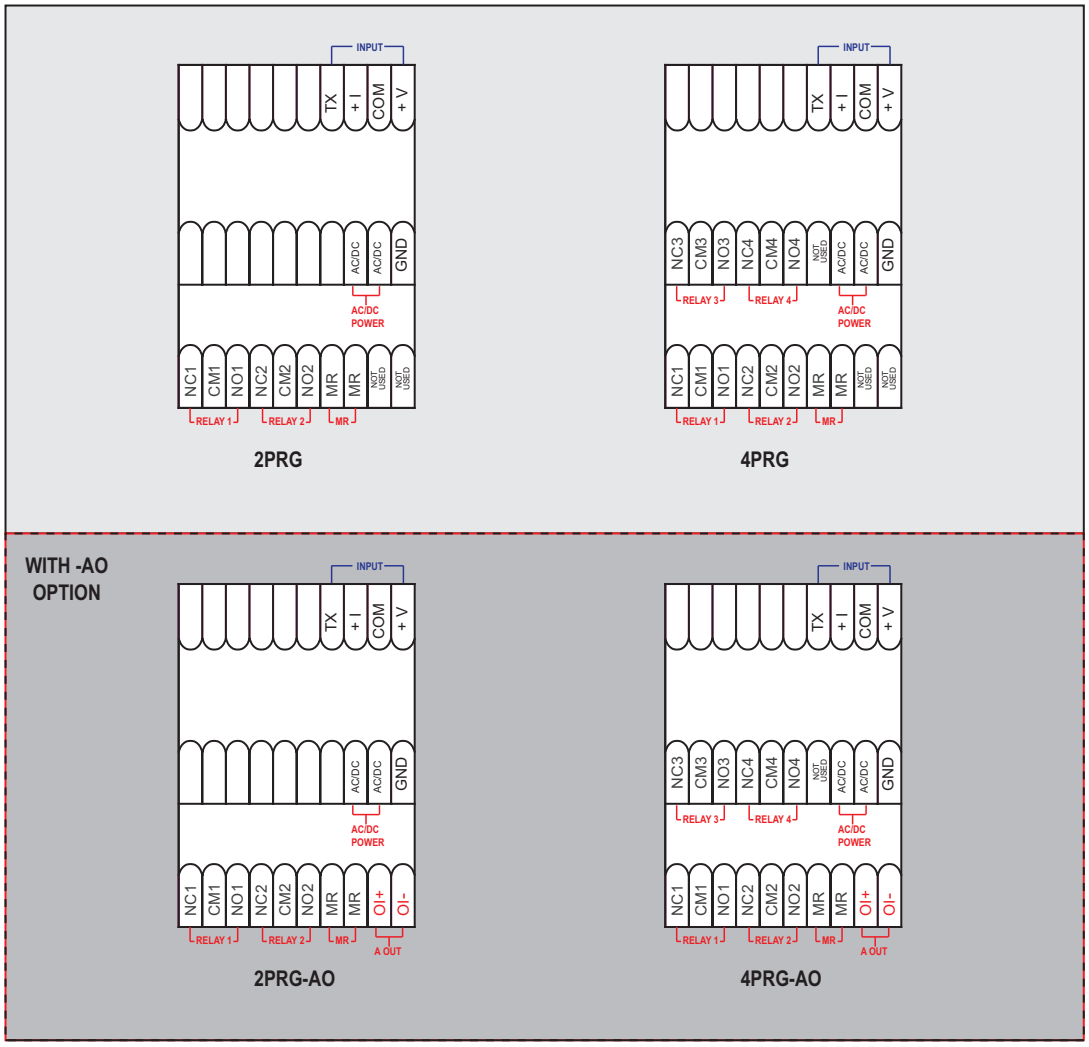

NOTES:
1. Terminal blocks can accommodate 14-22 AWG solid wiring.

KEY:

AC/DC = Power Input	I = Current Input	SPDT = Single-Pole/Double-Throw
CM = Relay Common	Io = Current Output	TX = Power for 2-wire transmitter
COM = Analog Common	MR = Manual Reset	
GND = Ground	NO = Normally Open	
	NC = Normally Closed	

Table 3.2. *SPA²IS (TPRG) Terminal Designations*

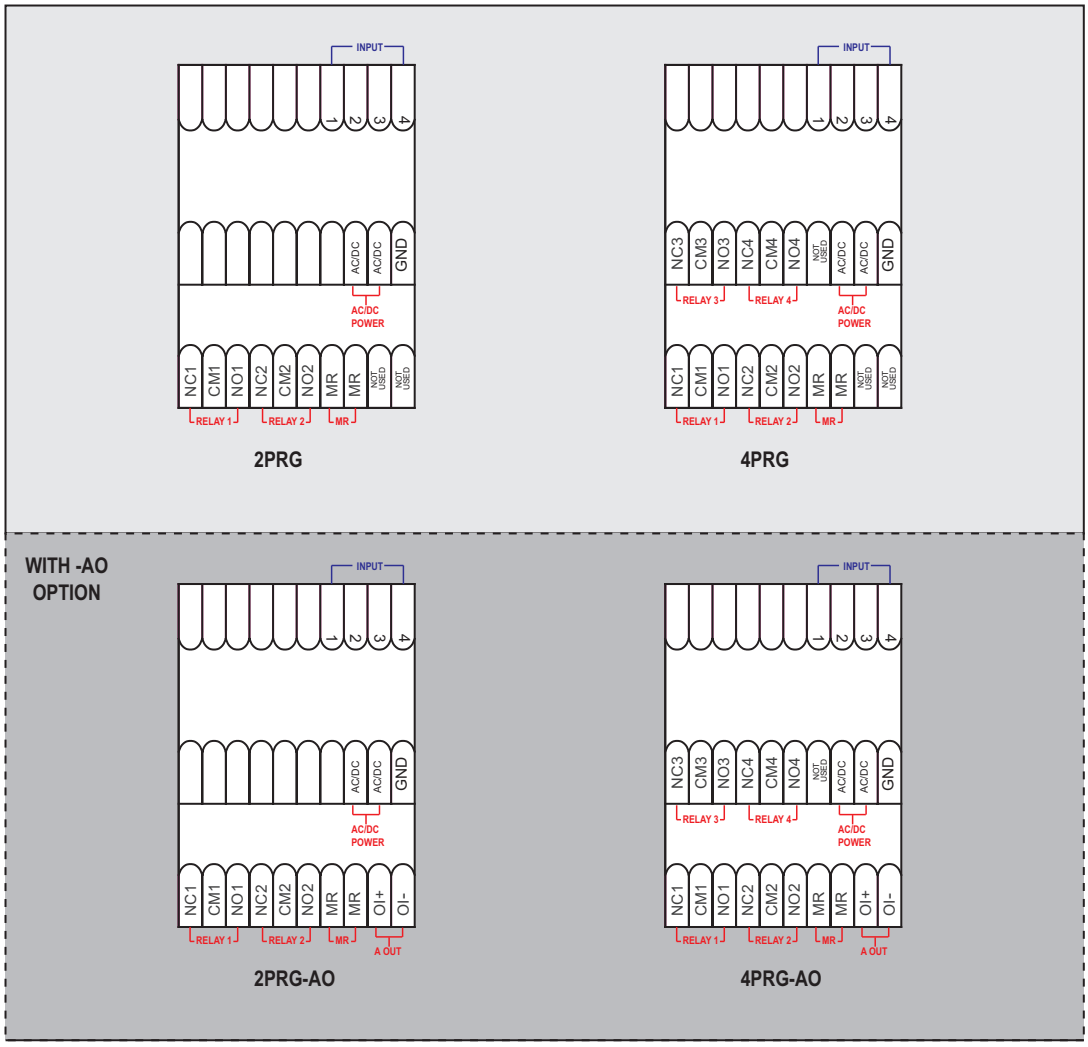

NOTES:
1. Terminal blocks can accommodate 14-22 AWG solid wiring.

KEY:

AC/DC = Power Input	I = Current Input	SPDT = Single-Pole/Double-Throw
CM = Relay Common	Io = Current Output	TX = Power for 2-wire transmitter
COM = Analog Common	MR = Manual Reset	
GND = Ground	NO = Normally Open	
	NC = Normally Closed	

Table 3.3. *SPA²IS (TPRG) Input Hook Connections*

TPRG INPUT HOOK-UP CONNECTIONS

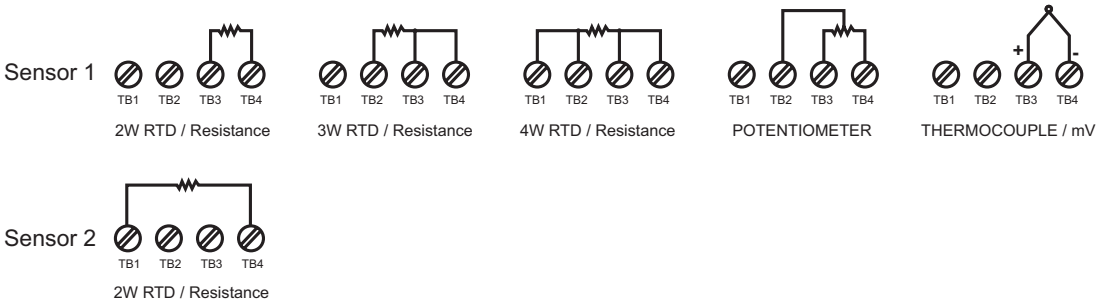

Note: *When using 2 input sensors, sensor 1 is limited to 2-wire and/or 3-wire RTD/resistance. 4-wire sensors cannot be used.*

Figure 3.1. *SPA² IS Dimensions*

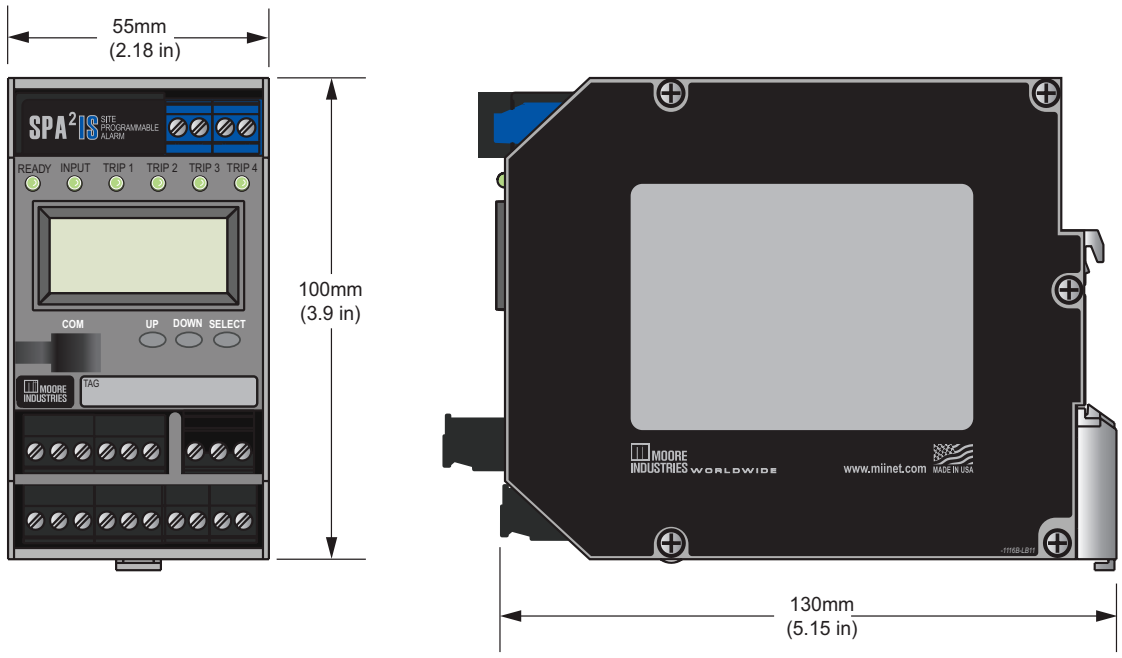

Figure 3.2. *SPA² IS Internal Jumper for Password Security*

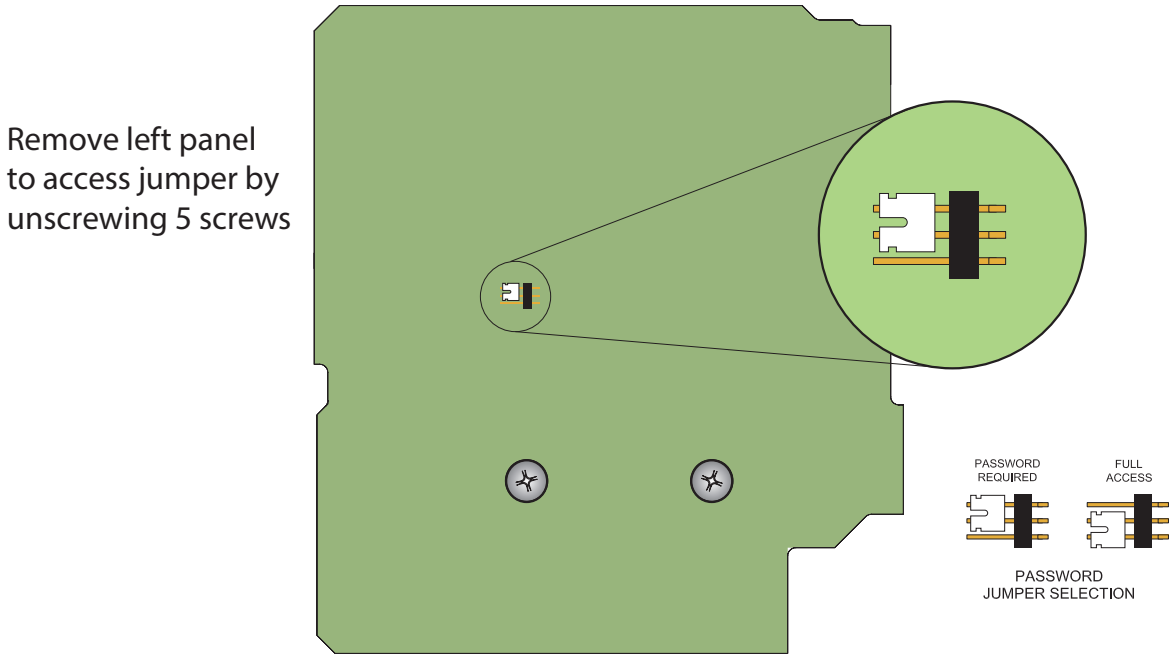

Note: *The password security function of the SPA2IS is controlled by a single jumper inside the unit housing. The default (factory) setting is 'Password required ' as shown above. 'Full Access' means that no password is required.*

Equipment Ratings

Contact Relays

The SPA² IS does not generate hazardous voltages but can switch outputs up to 5A at up to 250Vac or 30Vdc on its relay contacts. Products connected to the SPA²IS relay terminals should be designed to receive this type of input.

Analog Output

The SPA² IS does not generate hazardous voltages, it provides a low current 0-20mA output. Products connected to the SPA²IS Analog Output terminals should be designed to receive this type of input.

Warning: *If this unit is used in a manner not specified by Moore Industries, the protection provided by the equipment may be impaired.*

Switches and Circuit Breakers

For AC powered SPA²IS units, a switch or circuit breaker must be wired in series with the AC power conductors. The switch or circuit breaker used must be located within three meters of the unit. The circuit breaker or switch will only remove power to the unit, hazardous voltages may still be connected to other terminals on the unit.

Power Supply Wiring

All power connections should be made with 14 or 16 AWG (2mm^2 or 1.3mm^2) wire.

The end of each conductor should be stripped no more than 0.25in (7mm). The end of the stripped wire should be tinned with solder, or inserted into a ferrule and crimped before being placed into a terminal block.

Tighten the screws on the terminal block to 4.4 - 5.3 lbf/in^2 (0.5 - 0.6 N/m^2).

Protective Earth Conductor

The Protective Earth Conductor shall be of equal or larger size wire than the other two power conductors. The Protective Earth Conductor shall be the first conductor connected to the unit when the unit is being wired. It shall be the last conductor removed when the unit is being un-wired.

Input/Output Wiring

The Input/Output connections can be made with 14 to 24 AWG (2.5mm^2 to 0.2mm^2) wire. The end of each conductor should be stripped no more than 0.25in (7mm). Tighten the screws on the terminal block to 4.4 - 5.3 lbf/in^2 (0.5 - 0.6 N/m^2).

Recommended Ground Wiring Practices

Moore Industries recommends the following ground wiring practices:

- Any Moore Industries product in a metal case or housing should be grounded.
- The protective earth conductor must be connected to a system safety earth ground before making other connections.
- All input signals to, and output signals from, Moore Industries' products should be wired using a shielded, twisted pair wiring technique. Shields should be connected to an earth or safety ground.
- For the best shielding, the shield should be run all the way from the signal source to the receiving device. (see Note below)
- The maximum length of un-shielded input and output signal wiring should be 2 inches.

Note: *Some of Moore Industries' instruments can be classified as receivers (IPT2, IPX2, etc.) and some can be classified as transmitters (TRX, TRY, etc.) while some are both a receiver and a transmitter (SPA2, HIM, etc). Hence, your shield ground connections should be appropriate for the type of signal line being shielded. The shield should be grounded at the receiver and not at the signal source.*

CE Certification-related Guidelines

Installation of any Moore Industries' products that carry the CE marking must adhere to the guidelines in the Recommended Ground Wiring Practices section in order to meet the EN 61326 requirements set forth in the applicable EMC directive.

The Low Voltage Directive also applies to the AC powered units and/or when connecting any of its output relay contacts to voltages greater than 50 vac. In order to comply with EN61010-1 (Low Voltage Directive) all guidelines in this section must be followed.

Contact/Load Suppression

When the instrument relays are used to switch an inductive load such as an external relay coil, contactor, solenoid, large voltage spikes may be created in nearby cable harnesses. When excessive, these voltage spikes can disrupt the operation of all nearby electronics including this product. Inductive loads should have suppression devices installed at the load (for external relays this would be right across the relay coil itself). Usually this is a simple diode for dc circuits. AC circuits routinely use an R-C snubber. Please follow the external load manufacturer instructions for their recommended suppression kits.

Installation in Hazardous Locations

This section contains important information regarding installation of SPA²IS in Hazardous Area Locations.

WARNING:
Substitution of components is not allowed, as it may impair the intrinsic safety.

AVERTISSEMENT:
La substitution de composants peut compromettre la sécurité intrinséque.

WARNING:
To prevent ignition of flammable or combustible atmospheres, disconnect power before servicing.

AVERTISSEMENT:
Risque d'explosion. Avant de déconnecter l'equipement, couper le courant ou s'assurer que débrancher tant que l'emplacement est désigné non dangereux.

WARNING:
Explosion Hazard. Do not disconnect equipment when a flammable or combustible atmosphere is present.

AVERTISSEMENT:
Risque d'explosion. Ne pas débrancher tant que le circuit est sous tension, a moins qu'il ne s' agisse d'un emplacement non dangereux.

WARNING:
Explosion Hazard. Substitution of components may impair suitability for Class I, Division 2.

AVERTISSEMENT:
Risque d'explosion. La substitution de composants peut rende ce materiel inacceptable pour les emplacements de Classe I, Division 2.

Special Conditions of Use

The following instructions must be adhered to when the SPA²IS is used in hazardous locations and potentially explosive atmospheres.

cFMus Installations

The SPA²IS shall be mounted in an enclosure providing a minimum degree of protection of IP54 in accordance with ANSI/ISA 60079-15 or CAN/CSA-E60079-15 and in a tool-secured enclosure which meets the requirements of ANSI/ISA 60079-0 and ANSI/ISA 60079-15 or CAN/CSA-E60079-0 and CAN/CSA-E60079-15. .

Note: *Using the box provided on nameplate, the User shall permanently mark the type of protection chosen for the specific installation. Once the type of protection has been marked it shall not be changed.*

European Union Installations (ATEX 94/9/EC Directive)

The SPA²IS shall be mounted in an enclosure providing a minimum degree of protection of IP54 in accordance with EN 60079-15 and in a tool-secured enclosure which meets the requirements of EN 60079-0 and EN 60079-15.

Note: *Using the box provided on nameplate, the User shall permanently mark the type of protection chosen for the specific installation. Once the type of protection has been marked it shall not be changed.*

IECEx Installations

The SPA2IS shall be mounted in an enclosure providing a minimum degree of protection of IP54 in accordance with IEC 60079-15 and in a tool-secured enclosure which meets the requirements of IEC 60079-0 and IEC 60079-15.

Note: *Using the box provided on nameplate, the User shall permanently mark the type of protection chosen for the specific installation. Once the type of protection has been marked it shall not be changed.*

Section 4: Configuration Front Panel Pushbuttons

The SPA²IS operating parameters may be set using front panel pushbuttons and/or Moore Industries' PC Configuration Software. This section describes configuration via the front panel pushbuttons.

There are three pushbuttons on the unit's front panel; *UP*, *DOWN* and *SELECT*. Together with the prompting messages displayed on the LCD, these are used to access menus, and to view and change the settings.

Use *SELECT* as your "Enter" button, to make your selections.

Use the *UP* and *DOWN* buttons to navigate within the menus.

Note: *Refer to the QuickStart Guide to see the default factory settings for your unit. All parameters, except the Custom Curve Table feature, can be configured using the front panel pushbuttons. The Custom Curve table can only be configured using the PC Configuration Software Program.*

Main Menu/View Settings

Figure 4.2 gives an overview of the Main menu; the View menu is shown in Figure 4.3.

Upon power-up, the SPA²IS defaults to a display of the measured value. Pressing the *DOWN* button accesses a series of displays that show, in succession, some of the settings currently stored in unit memory.

Depending upon whether or not the Security Jumper has been installed (Figure 3.2), pressing *SELECT* will access either the first screen in the main configuration menu, "CONFG INPUT" (or "CONFG SENSR"), or the password code query screen, "ENTER PASS".

Once the Main Menu has been accessed, the *DOWN* button is used to move through all of the sub-menus in a loop. Pressing the *SELECT* button accesses the first screen of the sub-menu shown on the LCD.

Password

This menu is bypassed if the Password Security Jumper is not installed. If the jumper is installed, the menu comes up when *SELECT* is pressed from the display of the process variable input. To access the security jumpers, you must remove the top cover (refer to Figure 2). The menu is shown as part of Figure 4.2. Refer to the *Password Configuration* section of this manual for a more detailed description of the password feature.

1. If the jumper is installed, pressing *SELECT* from the display of the process variable input will bring up the "ENTER PASS" screen.
2. Press *SELECT* again to enter the "PASS" screen. Use the *UP* and *DOWN* buttons to enter "55", the default screen for this point in the menu.
3. If a password has been set (four characters, maximum), use the *UP* or *DOWN* buttons to display the correct password.

   When the correct password number is displayed, press *SELECT*.

Note: *If the correct password is not known, the unit settings can be viewed, but not changed.*

4. If you have entered the correct password, the input configuration menu, "CONFG SENSR" (or "CONFG SENSR"), will be accessed. If not, the display will show a "VIEW ONLY" message.
5. From "VIEW ONLY", press *SELECT* to go back to the process variable input. Use the *UP* and *DOWN* buttons to view the settings in the various menus. The "VIEW ONLY" mode locks out any attempt to make changes to the settings.

Note: *The menu to set or change the password stored in SPA²IS memory is presented in the Password Configuration section of the manual.*

Figure 4.1. *SPA²IS Hook-Up Diagram For Front Panel Configuration*

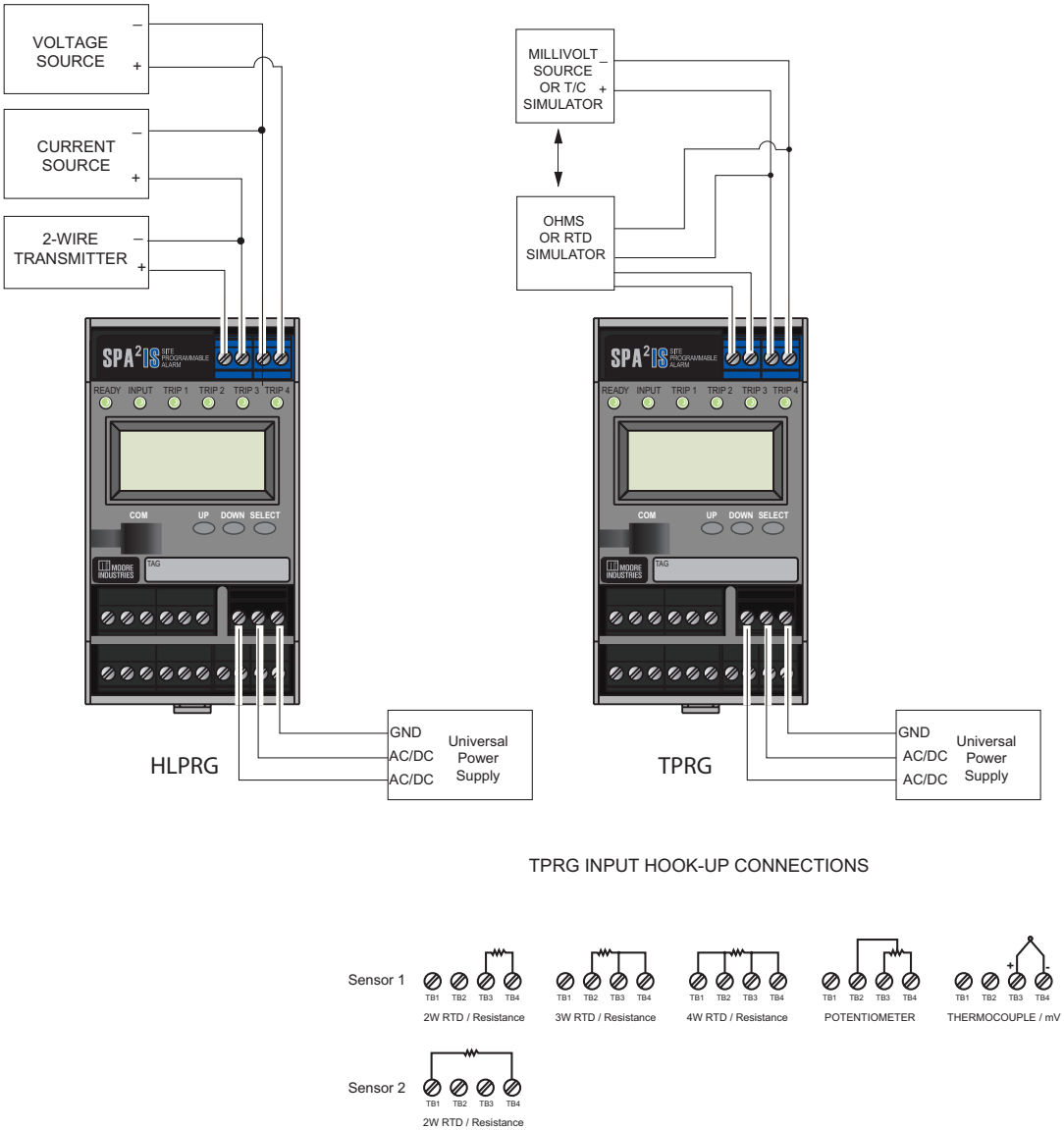

Note: *When using 2 input sensors, sensor 1 is limited to 2-wire and/or 3-wire RTD/resistance. 4-wire sensors cannot be used.*

Figure 4.2. *Main Menu and Password Menu*

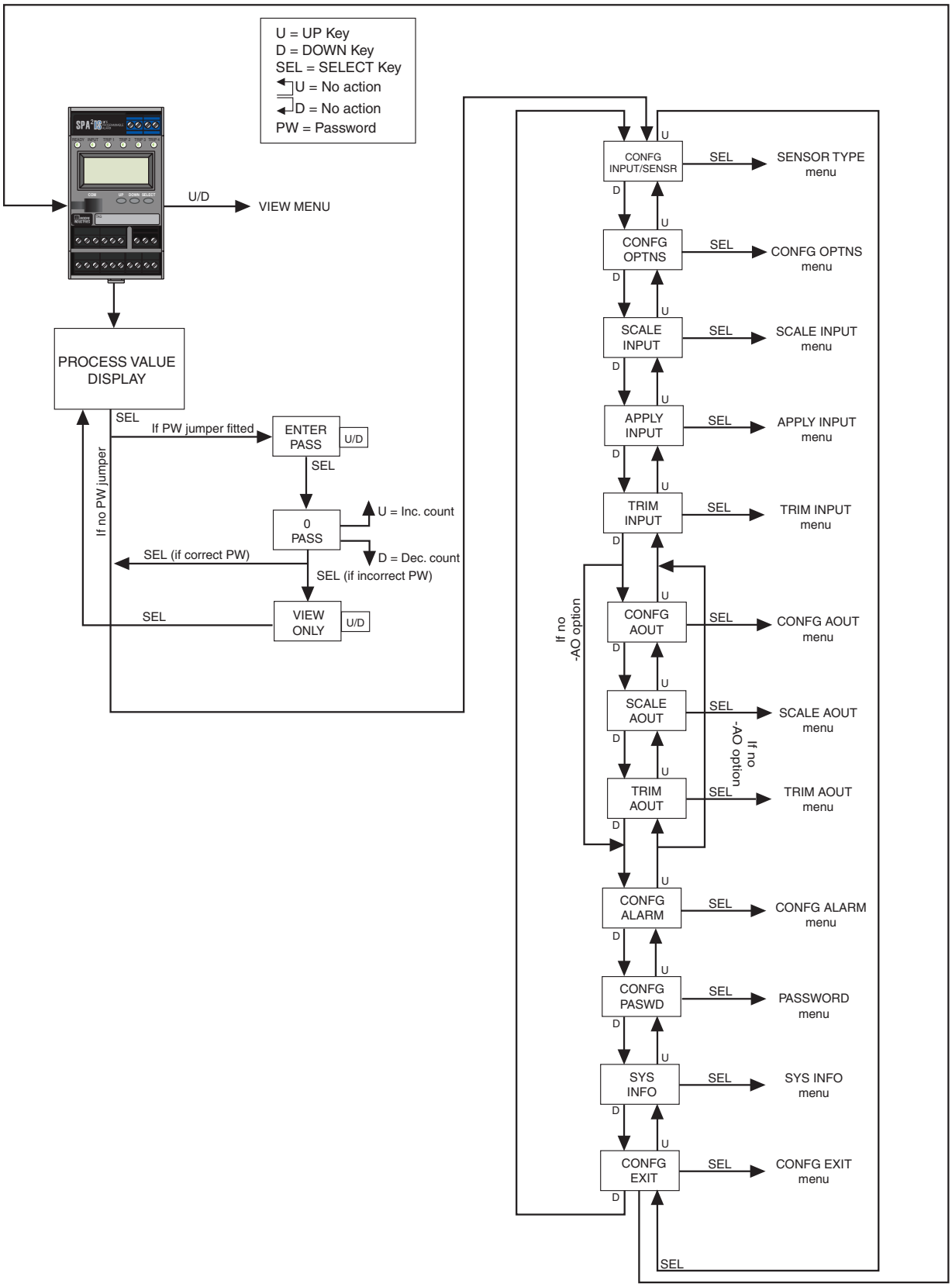

Figure 4.3. *View Menu*

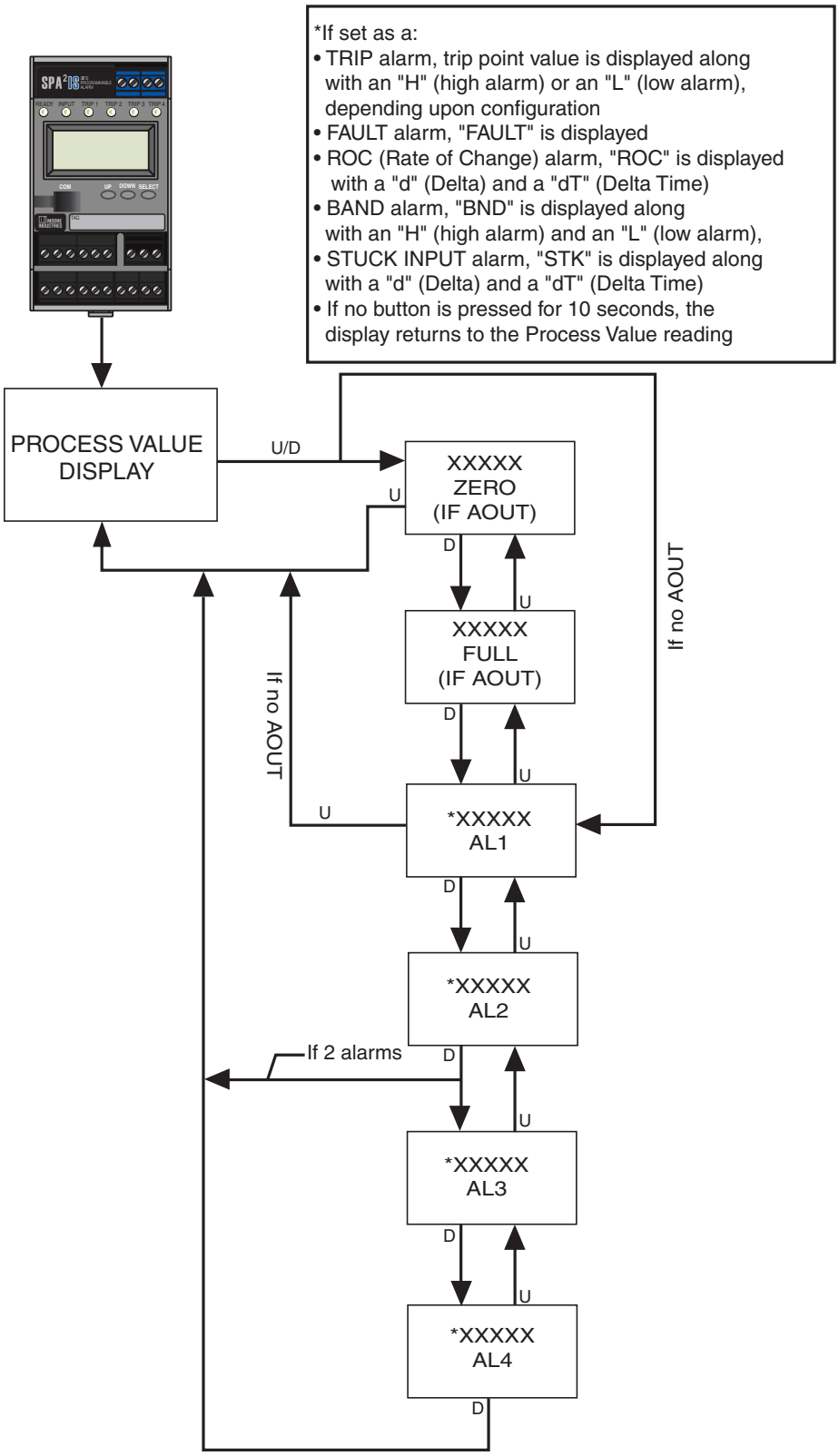

Configuring the HLPRG Input

Figure 4.4. gives an overview of the Input Configuration menu.

If the Password Jumper is not installed, the password sub-menu is bypassed, and the "CONFG INPUT" menu is accessed by pressing *SELECT* from the process variable display.

1. From the "CONFG INPUT" display, press *SELECT*.
2. At "INPUT TYPE" press *SELECT*. The display shows, "CURNT" or "VOLT" (current or voltage parameter). Use the *UP* or *DOWN* arrow buttons to scroll through the two options for input type. The default display for this menu is always the last setting.
3. When the display shows the type of input, current or voltage, that you choose to use, press *SELECT*.
4. Next, the available input values are displayed. Use the *UP* or *DOWN* buttons to scroll through the selections, choose a value that is greater than or equal to the maximum value for the input you will be monitoring and press *SELECT* when the value has been displayed.
5. "EXIT INPUT" appears. If all values in this parameter have been set, press *SELECT.* If not, return to the menu and set your values.
6. The next display is the menu for the selection of functional options, "CONFG OPTNS". To skip the rest of the configuration menus and return to the process variable display, press the *UP* button twice (to "CONFG EXIT"), and press *SELECT*.

Figure 4.4. *CONFG INPUT Menu*

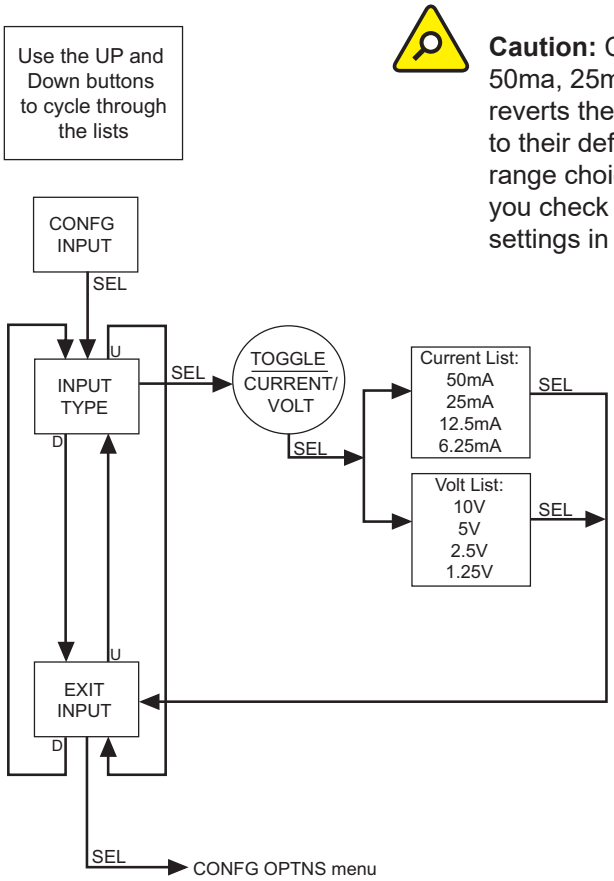

Caution: Cycling thru the Current List or Voltage List (i.e 50ma, 25ma, 10V, 5V, etc.) under the **INPUT TYPE** menu reverts the SPA2IS Input Zero and Input Full settings back to their default values. After viewing or selecting the input range choices in this **INPUT TYPE** menu, ensure that you check or reset the SPA2IS Input Zero and Input Full settings in the "SCALE INPUT" menu section (Figure 4.7).

Configuring the TPRG Sensor

Figure 4.5. gives an overview of the Input Configuration menu.

If the Password Jumper is not installed, the password sub-menu is bypassed, and the "CONFG INPUT" menu is accessed by pressing *SELECT* from the process variable display.

1. From the "CONFG SENSR" display, press *SELECT*.
2. At "SENSR TYPE" press SELECT. Use the *UP or DOWN* arrow buttons to scroll through the options in the "Sensor Selection List" box shown in Figure 4.5, for input type. The default display for this menu is always the last setting.
3. When the display shows the type of input that you choose to use, press SELECT.
4. Depending on the type of input sensor you choose you may then be presented with a sub-menu where you can further refine your choice of sensor type. For example: if you choose "T/C+RJC" you will then be presented with sub-menu where you can choose the type of thermocouple you will be using.
5. If a Resistance range was selected as your input, and you are using dual sensors, you will need to choose whether you want to view your process variable in an average (PV AVG) or differential (PV DIFF) display; press *SELECT*.
6. "EXIT SENSR" appears. If all values in this parameter have been set, press *SELECT*. If not, return to the menu and set your values.
7. The next display is the menu for the selection of functional options, "CONFG OPTNS". To skip the rest of the configuration menus and return to the process variable display, press the UP button twice (to "CONFG EXIT"), and press SELECT.

Caution: After selecting an entry in the Sensor Selection List you will be placed in the selected list (e.g., RTD Type, MV Range, T/C Type, Resistance Range, or Potentiometer Range). If you then scroll up or down while in that list, the list parameter value will be reset to its corresponding default value, so you must ensure that you enter the desired value for the Input Zero and Input Full settings in the "SCALE INPUT" menu section (Figure 4.7) before exiting and inadvertently overwriting the list parameter value with its default value.

Figure 4.5. *CONFG SENSOR Menu*

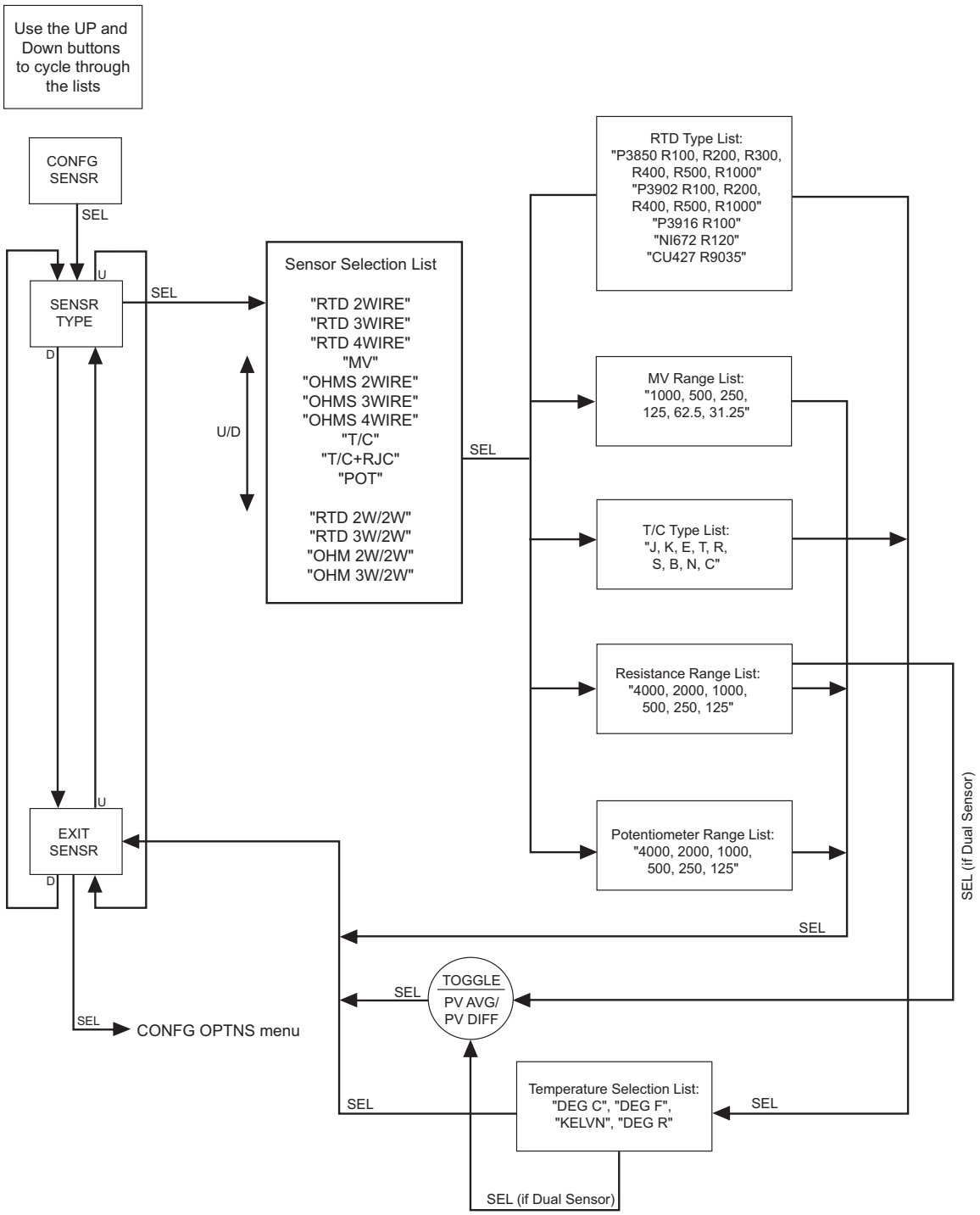

Configuring the Options

Figure 4.6. gives an overview of the Options Configuration menu.

You may configure the process variable display, decimal places, 50/60Hz filter selection, broken wire detection and the scaling mode from this menu.

To configure the options of the the SPA²IS:

1. At the "CONFG OPTNS" screen, press *SELECT.*
2. "DSPLY MODE" appears. Press *SELECT* to enter the menu. Choose between "NORM MODE" and "TOGLE MODE" by using the *UP* and *DOWN* buttons. Press *SELECT.*

   NORM MODE– (Normal Mode) Displays only your PV or AOUT (or RJC for TPRG units) value, whichever you select.

   TOGLE MODE– (Toggle Mode) Every four seconds your display will toggle between two displays that you choose.
3. Next, "DSPLY SRC 1" appears. Press *SELECT* and choose between "AOUT" (if your unit is equipped with the -AO option) or "PV" (or RJC for TPRG units) by using the *UP* and *DOWN* buttons. Press *SELECT.*

   If you selected "TOGLE MODE", you will next be asked to enter your "DSPLY SRC 2" value.
4. The "DSPLY EGU 1" (Display Engineering Units) prompt is brought up. Press *SELECT* and choose the desired appearance of your display. Press *SELECT.*

   If you selected "TOGLE MODE", you will next be asked to enter your "DSPLY EGU 2" value.
5. Next, the "SET DPS" (Set Decimal Places) display appears. Press *SELECT.* Scroll through the available choices by using the *UP* and *DOWN* buttons and press *SELECT* once you have made your selection.
6. "SET FILTR" (Set Filter) appears; press *SELECT*. Here, you must select the proper AC line frequency of your area–50Hz or 60Hz or you can choose the FAST option; press *SELECT*.

Note: *A faster response time can be achieved when selecting the Fast option, but this will also produce a reduced accuracy and increase the possibility of mains-induced noise.*

7. When "SET BWIRE" appears, press *SELECT* to enter the menu. You must choose whether or not to enable Broken Wire Detection. Press *SELECT.*

   HLPRG - Broken Wire Detection– The SPA²IS HLPRG monitors your process variable. Enabling broken wire detection allows user to set value wherein the SPA²IS HLPRG will detect and declare a broken wire condition. If the monitored value falls equal to or below a set value, then a state of Broken Wire is declared.

   TPRG - Broken Wire Detection– The SPA²IS TPRG monitors your process variable. If the hardware circuit detects a broken wire condition, then broken wire is declared. On TPRG unit this feature can only be turned on or off.

Caution: *Moore Industries does not recommend use of broken wire detection if using a voltage input on the SPA²IS HLPRG version. Various factors may hinder the unit's performance and greatly slow the broken wire response time. If broken wire detection is used on a voltage input, testing*

must be done on a regularly scheduled basis, both with near-end and far-end open circuits on each of the wires.

Leakage current into a broken wire can prevent the voltage from dropping to the broken wire threshold. For example, on a 1-5V input, with a broken wire threshold of 0.6V, a leakage current of 1microamp into the broken wire will hold the input voltage at approximately 1.1V indefinitely. No alarm results under these conditions.

If the external wiring is long and has significant capacitance, broken wire response time is slowed by the RC time constant of the SPA²IS input resistance and the external wire capacitance. For example, 1 km of wire with 100pf/m capacitance and a far-end break, has a capacitance of 0.1microfarad. The time constant will be 0.11 seconds. Using a starting voltage of 3V and a broken wire threshold of 0.6V, the threshold is reached in approximately 0.18 seconds. The instrument response time must be added to this time.

If both leakage and capacitance exist, the time to threshold can extend greatly. Using a 5V starting voltage, 0.6V threshold voltage, 1 km of wire and 0.5 microamps leakage current, the threshold is reached in 0.42 seconds. The instrument response time must then be added to this time.

8. "SCALE MODE" appears; press *SELECT*. Choose whether or not to enable scaling. This will be configured in the next menu. Select "SCALE OFF" or "SCALE ON" and press *SELECT.*

Caution: *Turning on scaling will disable custom-curve and turning off scaling will not restore custom-curve. The custom-curve can only be restored using the PC configuration Software. The custom data points will remain unchanged.*

Scale Mode– This allows you to customize your display for your application. By example: if your process is sending a 4-20mA signal to the SPA²IS and you wish to view the input as 0-100% then this can be accomplished with the Scale Mode feature.

9. "EXIT OPTNS" (Exit Options) appears. Press *SELECT*. Proceed to the "SCALE INPUT" menu.

Figure 4.6. *CONFG OPTNS Menu*

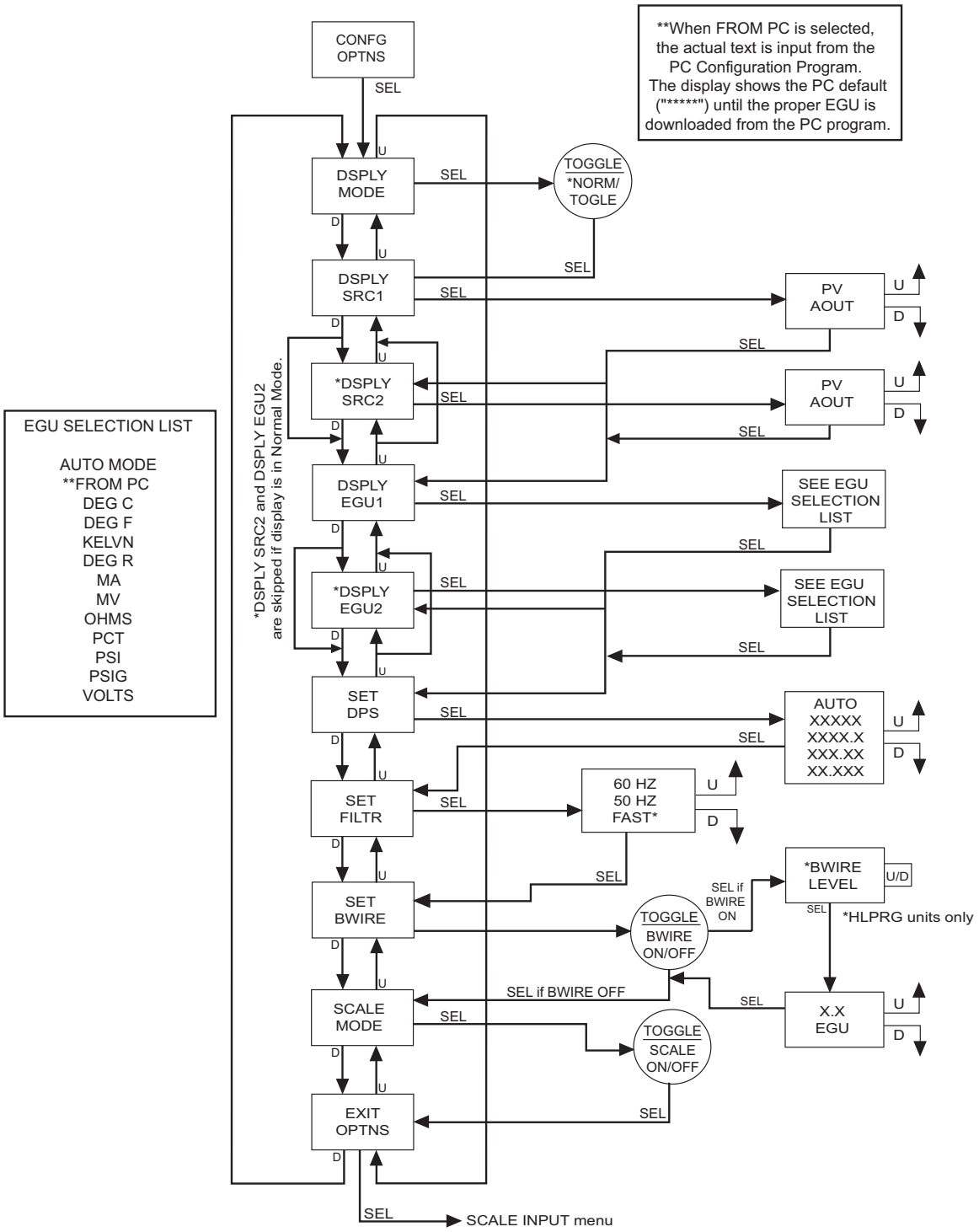

Scaling the Input

Figure 4.7. gives an overview of the Input Scaling menu.

Scaling allows you to take your PV (Process Variable) reading and manipulate it to a more customized display range. PV is the unit read after selecting your input type. For example, choosing a Current input would then produce a PV displayed in mA.

Also known as "Smart Ranging", scaling of the SPA²IS allows the user to set the zero and full scale values of the input from the intended application, without having to connect the unit to any calibration equipment.

Continue with the "SCALE INPUT" if you enabled scaling in the previous menu. To proceed, follow the steps below.

1. At the "SCALE INPUT" display, press *SELECT*.
2. Press *SELECT* at the "INPUT ZERO" parameter and enter the value you want displayed when your input is at zero. Press *SELECT.*
3. Press *SELECT* at the "INPUT FULL" screen. Enter the value you wish displayed when your input is at full scale. Press *SELECT.*

   If you selected "SCALE OFF" in the "CONFG OPTNS" menu, the menu skips to Step 6. If you selected "SCALE ON", proceed to Step 4.
4. Next, "SCALE ZERO" is displayed. Use the *UP* and *DOWN* buttons to adjust your scaled zero value. This is the value that will be displayed when you are at the zero end of your display range. Press *SELECT.*
5. "SCALE FULL" appears. Press *SELECT* to enter the menu. Enter the value you wish as your full scaled range– the value displayed when you are at the full end of your range. Press *SELECT.*
6. "EXIT SCALE" appears. If all scaling parameters have been set, press *SELECT.* The next menu selection to appear is "TRIM INPUT".

Figure 4.7. *SCALE INPUT Menu*

NOTES:
1. When scaling the input, the value displayed represents the actual input.
2. When the SCALE INPUT menu is accessed, the APPLY INPUT menu is skipped and the TRIM INPUT menu appears.

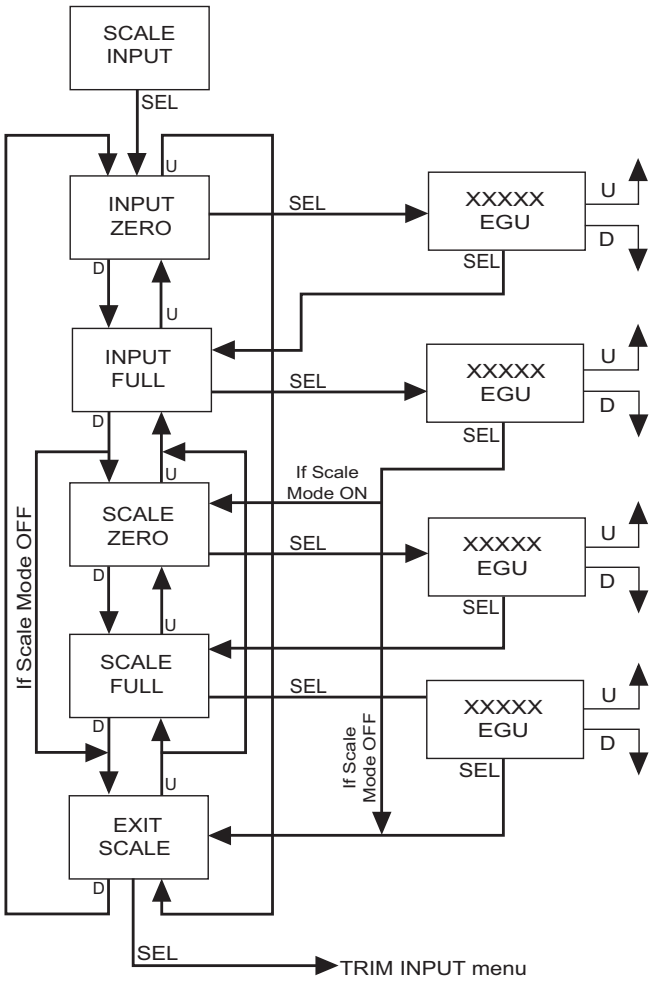

Applying Input (Bench Scaling)

Figure 4.8. gives an overview of the Apply Input menu.

With Bench Scaling, also called "Standard Ranging", inputs are "captured" at their zero and full scale levels using external, calibrated equipment.

1. At the "APPLY INPUT" screen, press *SELECT.*
2. "APPLY ZERO" appears. Apply the input you wish as your zero and press *SELECT*. Wait until it is flashed on the display and press *SELECT* to capture.
3. Next, "APPLY FULL" is displayed. Apply the value of your full range and press *SELECT*. When this is flashed, press *SELECT* to capture.
4. Press *SELECT* at "EXIT APPLY" and exit the menu.

Figure 4.8. *APPLY INPUT Menu*

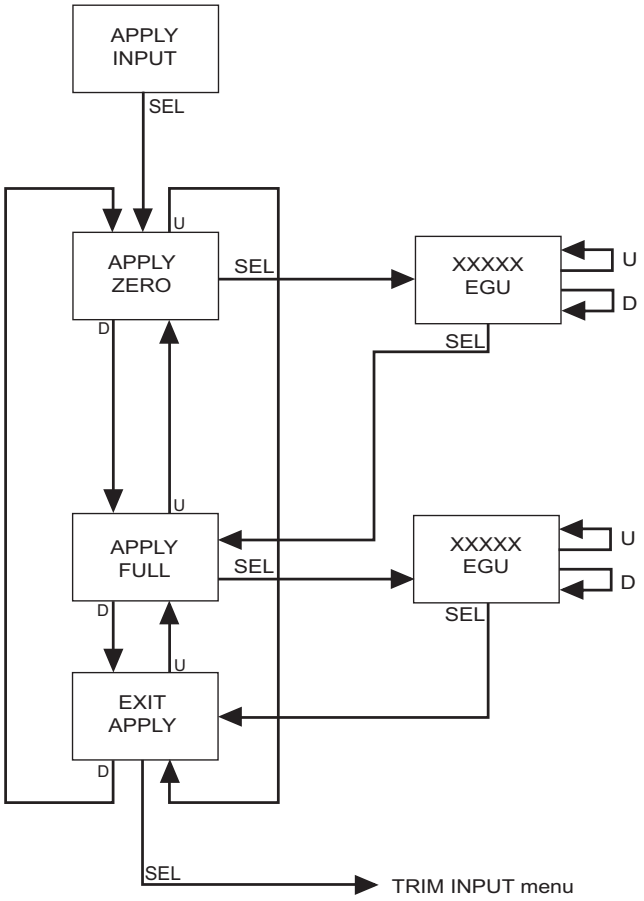

Input Trimming

Figure 4.9. gives an overview of the Input Trimming menu.

Input trimming increases the measurement accuracy of the parameter you are trimming by matching the reading of its actual input to its scaling. The SPA²IS offers the use of a factory-configured trimming feature ("FCTRY TRIM") or user-set, one-point or two-point ("USER 1PNT" OR "USER 2PNT") trimming.

Unit default is "FCTRY TRIM". If another trimming selection had been made and you wish to return to the "FCTRY TRIM" feature, follow the instructions below.

1. Press *SELECT* at the "TRIM INPUT" SCREEN. Once the "TRIM MODE" appears, press *SELECT*.
2. "FCTRY TRIM" is displayed, press *SELECT.* This takes you to the "EXIT TRIM" screen.
3. To exit, press *SELECT*.

To input user-specific trim values, perform the following steps:

1. At the "TRIM INPUT" display, press *SELECT*. When "TRIM MODE" appears, press *SELECT* again. Use the *UP* and *DOWN* buttons to reach the user-set trimming menus. Press *SELECT* once the desired parameter is displayed– "USER 1PNT" or "USER 2PNT".
2. "TRIM ZERO" appears. To program, press *SELECT*. Your present zero scaling value is shown and prompts you to "APPLY" your value. Press *SELECT,* once your value is present and flashing at the appropriate input terminals, press *SELECT* again. If you selected "USER 1PNT" trimming, "EXIT TRIM" appears. Press *SELECT* to reach the "CONFG AOUT" menu (or "CONFG ALARM" menu if the -AO option is not enabled). Proceed to Step 3 for "USER 2PNT" trimming.
3. If you selected "USER 2PNT" trimming, repeat the instructions in Step 2 for the "TRIM FULL" setting. Press *SELECT* when "EXIT TRIM" is displayed to reach the "CONFG AOUT" menu (or "CONFG ALARM" menu if the -AO option is not enabled).

Note: *Trim only the zero and full values entered in the "SCALE INPUT" menu through the front panel pushbuttons. To trim values other than those specified in the "SCALE INPUT" menu, you must use the PC Configuration Software program.*

Figure 4.9. *TRIM INPUT Menu*

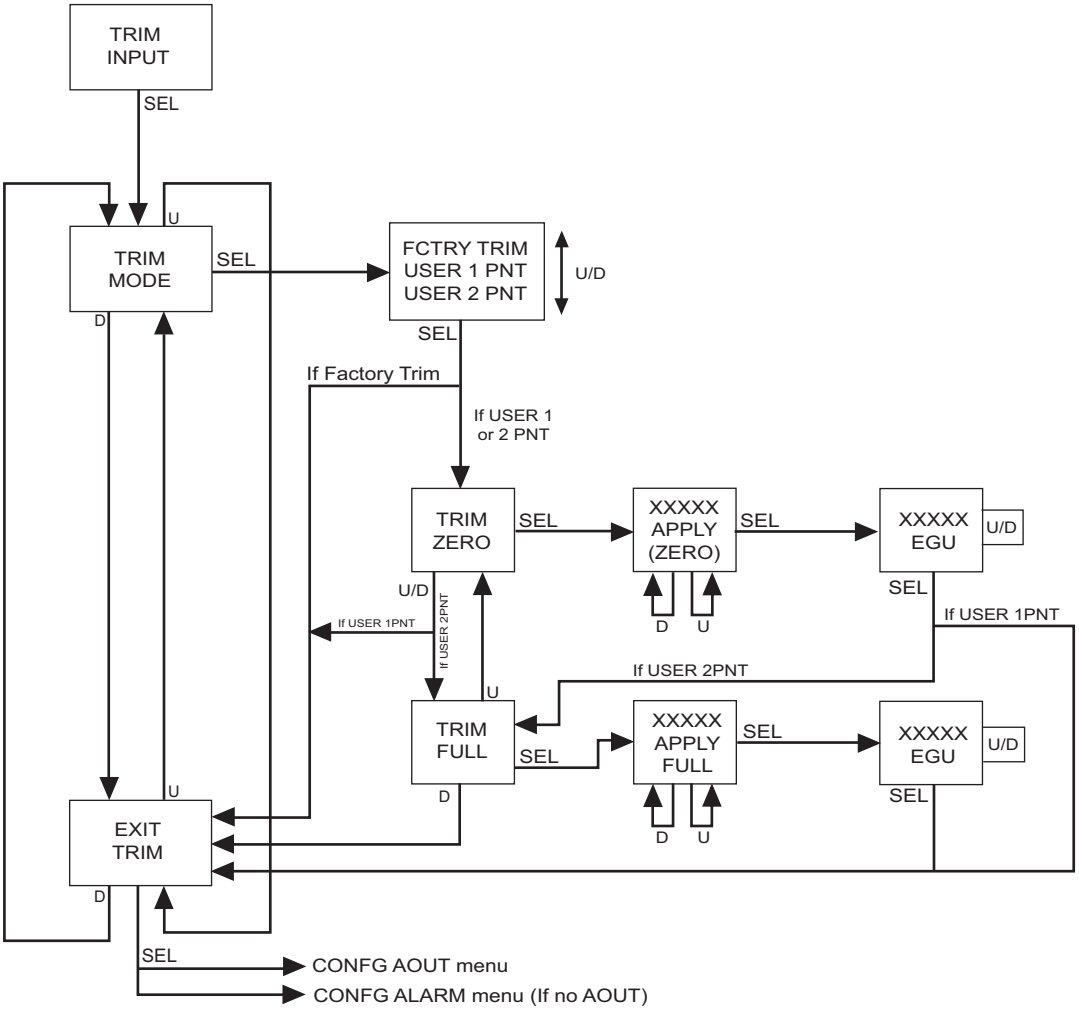

Configuring the Analog Output (-AO Option)

Figure 4.10. gives an overview of the Analog Output Configuration menu.

If your unit is equipped with the -AO option, use this menu for configuration.

1. Press *SELECT* at the "CONFG AOUT" display. This sends you to the "SEL AOUT" section, now press *SELECT.*
2. Once you reach the "SET DAMP" field, you may skip the damping parameter, by using the *Down* button to reach the next field. To set damping, proceed to Step 3.

   Damping– Output Damping allows you to introduce a delay (0-30sec) into the response of your unit in order to stop momentary input variations from setting off alarms.
3. To set damping, press *SELECT* at the "SET DAMP" display. Use the *UP* and *DOWN* buttons to enter a value between 0 and 30 seconds; press *SELECT.*
4. Press *SELECT* at "FAIL MODE" to program the setting. Choose "FAIL HIGH" or FAIL LOW" if using HLPRG unit. Choose "FAIL HIGH", "FAIL LOW", "HOLD LAST", "HOLD GO-HI", or "HOLD GO-LO" if using TPRG unit. This sends you to "EXIT AOUT".

HIGH/LOW– Choosing either of these options will send the output to a High (23.6mA for current; 11.0V for voltage) or Low (3.6mA forcurrent; -0.5V for voltage), respectively. This can also be translated as 90% of the output's zero value.

HOLD LAST (TPRG) – This will display the last value present before the failure.

HOLD GO-HI/HOLD GO-LO (TPRG) – This will hold the last value before failure, for a set time, and then return to the High or Low value, depending on configuration.

Figure 4.10. *CONFG AOUT Menu*

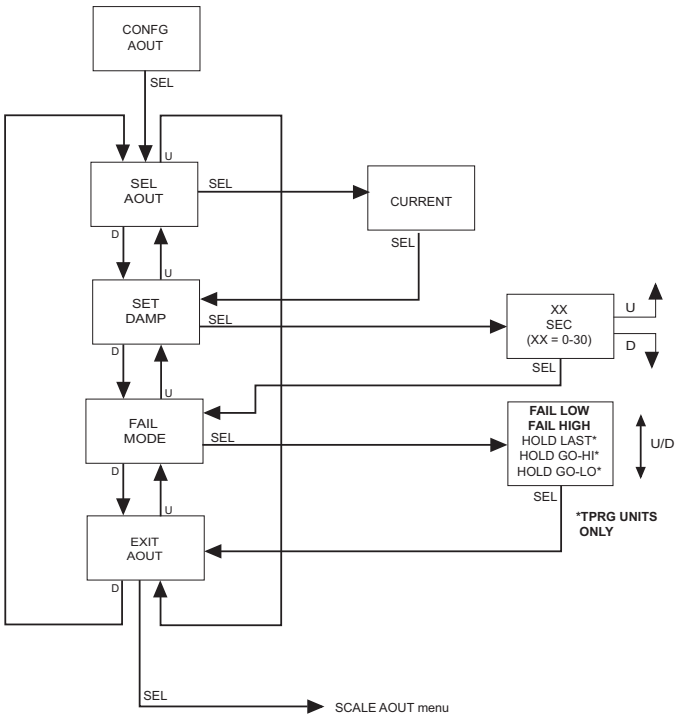

Scaling the Analog Output (-AO Option)

Figure 4.11. gives an overview of the Analog Output Scaling menu.

Follow these instructions to scale the analog output after you have performed the configuration.

Note: *When using the front panel pushbuttons to enter your scaling values, you may enter only values to one decimal place (tenths). To adjust your value past one decimal place, you must use the PC Configuration Program.*

1. At the "SCALE AOUT" display, press *SELECT*.
2. Press *SELECT* at the "AOUT ZERO" parameter and enter the value you want to output when your input is at zero. Press *SELECT.*
3. Press *SELECT* at the "AOUT FULL" screen. Enter the value you want to output when your input is at full scale. Press *SELECT.*
4. "EXIT SCALE" appears. If all scaling parameters have been set, press *SELECT.*

Figure 4.11. *SCALE AOUT Menu*

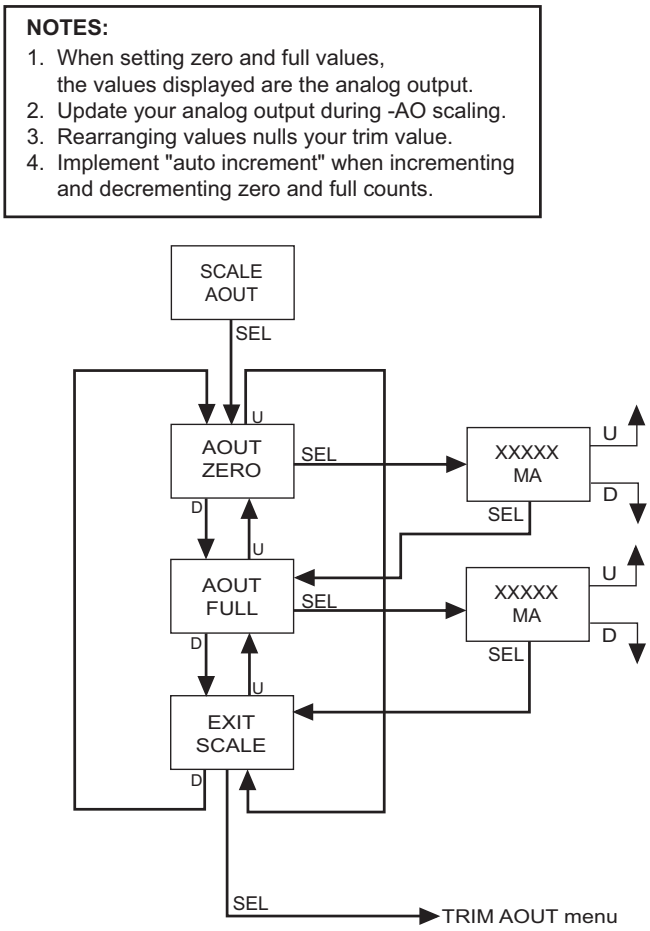

Trimming the Analog Output (-AO Option)

Figure 4.12. gives an overview of the Analog Output Trimming menu.

Output trimming increases the measurement accuracy of the SPA² IS by calibrating its analog output to the device that is receiving the output. This ensures that the instrument is being correctly interpreted.

Connect the unit as shown in Figure 4.13 and allow five minutes for warm up and stabilization.

1. At the "TRIM AOUT" display, press *SELECT*.
2. "TRIM ZERO" appears. Press *SELECT*. The value 0.000 (mA or V depending on the set up) is shown. While monitoring your reading on the meter, use the *UP* and *DOWN* buttons to adjust the output to the desired level. Use the meter in the set up to monitor the output as it is adjusted. When the output is set as desired, press *SELECT*.

Note:
The value on the LCD is the value that must be trimmed in order to adjust to the desired level.

3. Press *SELECT* at "TRIM FULL" and repeat Step 2. Press *SELECT*. "FCTRY TRIM" is shown on the display.
4. If you wish to **disable** the user-configured trimming values and use factory trimming, press *SELECT* at the "FCTRY TRIM" screen. Use the *UP* and *DOWN* buttons to choose "YES"; press *SELECT*. "TEST AOUT" is brought up on the display.

   By selecting "NO" at the "FCTRY TRIM" screen, the user-configured trim values will be used.
5. In order to check output performance and accuracy, you may want to perform an output test. If you choose to enable this test, follow the instructions in Step 6. To bypass this feature, use the *DOWN* button and scroll to "EXIT TRIM".
6. To enable the analog output test, press *SELECT* at the "TEST AOUT" display. Use the *UP* and *DOWN* buttons to set your output test value (this figure must fall within your sensor configuration range value) and press *SELECT*. "EXIT TRIM" appears; press *SELECT.*

Figure 4.12. *TRIM AOUT Menu*

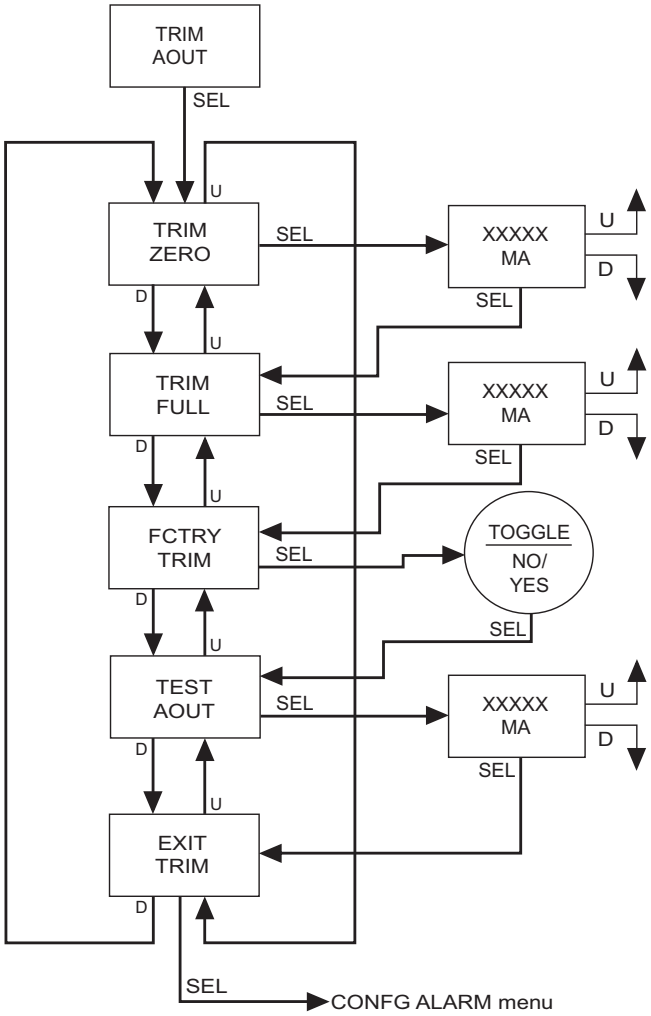

Figure 4.13. *SPA²IS Trimming Hook-Up Diagram For Front Panel Configuration*

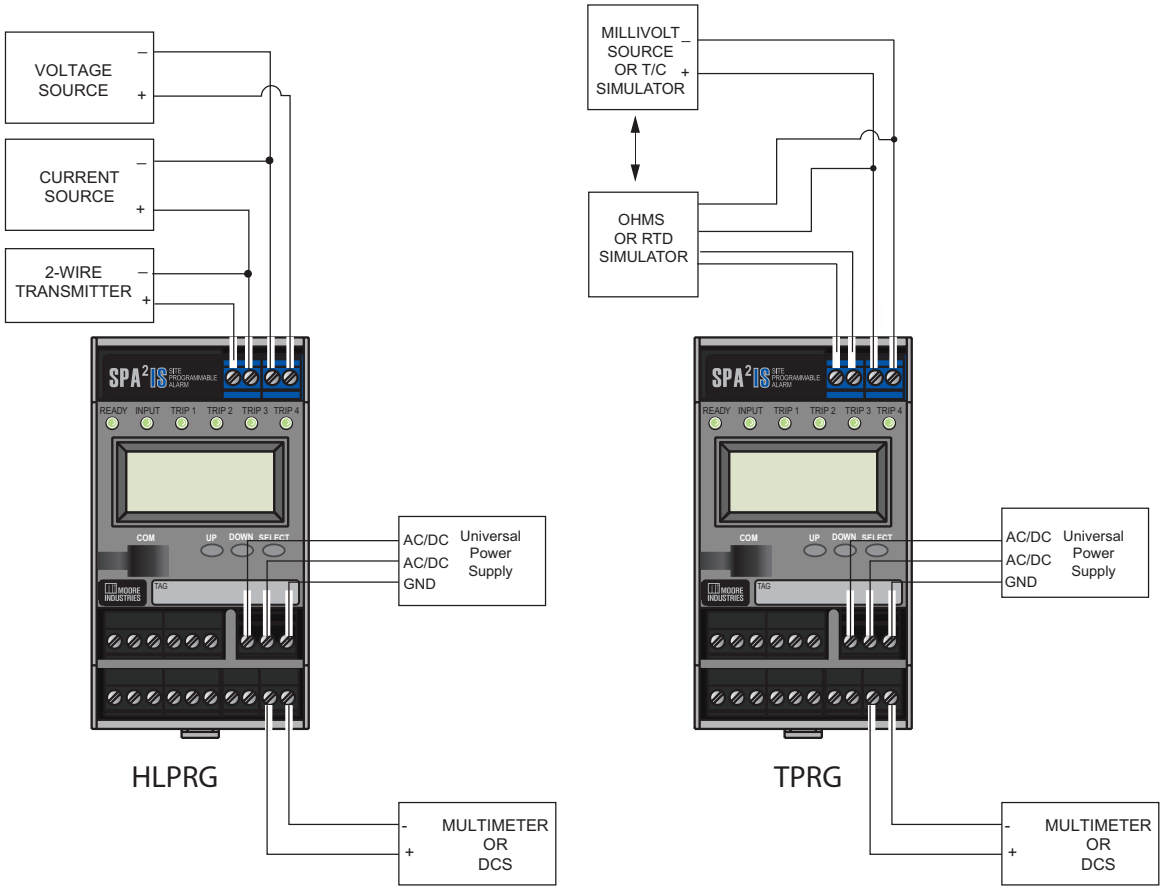

Configuring the Alarm(s)

The SPA2IS offers you up to four alarms which may be configured independently as the following alarm types:

- **Trip**
- **Rate of Change**
- **Band**
- **Fault**
- **Stuck Input**
- **Copy (Duplicate)**

The instructions will explain the steps to follow in order to set each type of alarm. Depending upon the type of alarm you are setting, you may refer to the section specific to your need at the time. For more information on the alarm types please refer to the Alarm Terminology section in the Introduction.

Trip Alarm Configuration

Figure 4.14. overview of the Trip Alarm Configuration menu.

Trip alarms are used if the user desires an alarm condition if a process value goes above or below a set trip point.

1. At the "CONFG ALARM" menu, press *SELECT*. Use the *UP* and *DOWN* buttons to toggle between the alarms. When the desired alarm appears, press *SELECT.*
2. At the "ALARM TYPE" menu press *SELECT.* From here you will choose your alarm type. Use the *UP* and *DOWN* buttons to scroll through the selections. Press *SELECT* once "ALARM TRIP" is displayed.
3. At "ENTER TRIP (Smart Ranging)", press *SELECT* and enter your alarm trip value. Use the *UP* and *DOWN* buttons to select your Enter Trip value; press *SELECT*. You also choose to use the *DOWN* button to select "INPUT TRIP (Standard Ranging)" then use the *UP* and *DOWN* buttons to select your Input Trip value.
4. Press *SELECT* at "ENTER DBAND" and enter your dead band value if using dead band. Press *SELECT* once your desired setting appears.

   Dead Band– The Dead Band is the range within which an alarm relay remains in an alarm condition even after the monitored process variable input has returned to a safe level, at or below/above the trip point setting.
5. Press *SELECT* at "ENTER DELAY" and input your desired delay time by using the *UP* and *DOWN* buttons.

   Delay– When your unit is in an alarm condition, the delay is the amount of time you set (0-120sec) to elapse before a relay trip.
6. Pressing *SELECT* at the "SET HI/LO" menu directs you to configure the alarm as an "ALARM HI" or "ALARM LO". Use the *UP* and *DOWN* buttons to reach your selection and press *SELECT.*

   ALARM LO– You are notified if your process input drops below your trip point setting.

   ALARM HI– You are notified if your process input exceeds your trip point setting.
7. At the "SET LATCH" display, press *SELECT* and choose "LATCH ON" or "LATCH OFF" using the *UP* and *DOWN* buttons; press *SELECT*.

Latching Alarm– When a SPA²IS is configured with latching alarms, an alarm condition will not "clear" (the relay will not change state) until the input returns to a non-alarm state ***AND*** manual reset terminals are shorted.

Note: *The alarm latching function is effectively disabled if the manual reset terminals remain shorted..*

These manual reset terminals, labeled "MR" are located on the bottom row of the SPA²IS.

8. Press *SELECT* at "SET FSAFE" to enter the menu. Then use the *UP* and *DOWN* buttons to switch from "ALARM FSAFE" to "ALARM NONFS". Make your selection and press *SELECT*.

   Fail Safe (ALARM FSAFE)– Will remain in an alarm condition even if power to the unit is removed. Its alarm trip relays are energized whenever the process input is in a non-alarm condition (including any dead band setting). These relays de-energize when the process input trips the alarm.

   Non Fail Safe (ALARM NONFS)– With this type of alarm relays are energized whenever the process input is in an alarm condition. These relays de-energize when the process input returns to the reset point (including any dead band).

9. "INPUT FAULT" (HLPRG) or "SENSR FAULT" (TPRG) appears. Select whether or not to enable the input failure alarm by using the *UP* and *DOWN* buttons; press *SELECT*.

   Input Fault Alarm (INPUT FAULT)– If enabled, this alarm will notify the user upon a breakdown of input .

10. "RANGE ALARM" appears. Select whether or not to enable the range alarm by using the *UP* and *DOWN* buttons; press *SELECT*. If enabled "LOWER POINT" appears, then use the *UP* and *DOWN* buttons to set your lower point value, press *SELECT.* "UPPER POINT" appears, then use the *UP* and *DOWN* buttons to set your upper point value, press *SELECT.* "EXIT RANGE" appears. Press *SELECT.* "EXIT ALRM*" appears. If range alarm not enabled "EXIT ALRM*" appears.

Note: *When setting the Range Alarm, the values in Lower Point must be greater than those of the Sensor Lower Limit, and less than those set in Lower Range. When setting the Upper Point, the value must be less than the Sensor Upper Limit, and greater than those set in Upper Range.*

11. If you are to program other alarms, use the *UP* and *DOWN* buttons to reach your next alarm and follow the steps described in the appropriate alarm configuration section.

    If you have completed your alarm configurations, use the *UP* and *DOWN* buttons to bypass the alarm menu. To exit, press *SELECT* at the "ALARM EXIT" display.

Figure 4.14. *CONFG ALARM MENU (Trip Alarm)*

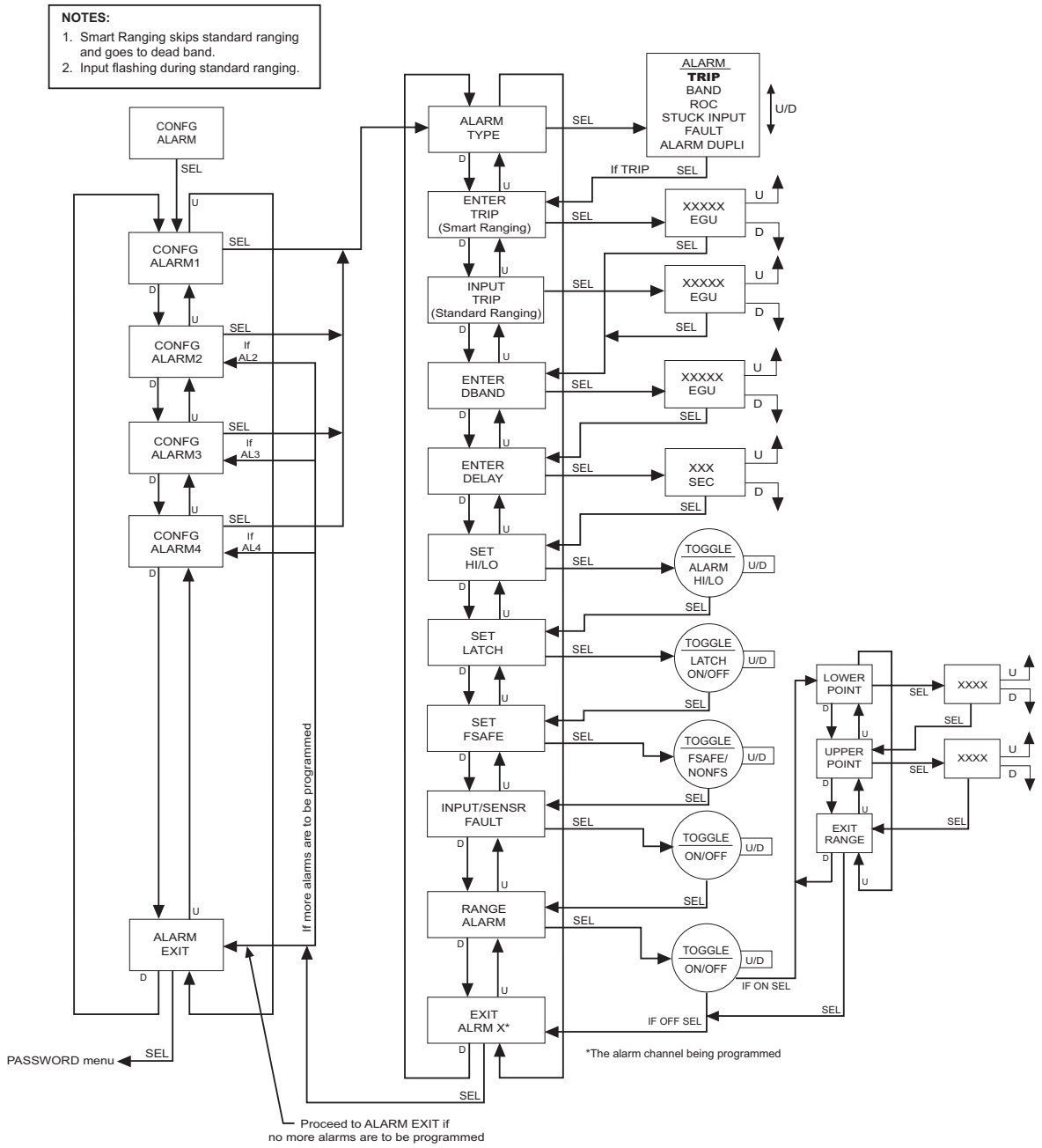

Fault Alarm Configuration

Figure 4.15 gives an overview of the Fault Alarm Configuration menu.

Fault alarms are set in order to notify you of any fault conditions during your process. If you wish an alarm condition when a malfunction occurs, use the Fault Alarm

1. At the "CONFG ALARM" menu, press *SELECT*. Use the *UP* and *DOWN* buttons to toggle between the alarms. When the desired alarm appears, press *SELECT.*
2. At the "ALARM TYPE" menu press *SELECT.* From here you will choose your alarm type. Use the *UP* and *DOWN* buttons to scroll through the selections. Press *SELECT* once "ALARM FAULT" is displayed.

   Below are the configuration options you are given in setting up the fault alarm. You may choose any combination of alarms including all three.

   SENSR (HLPRG) / INPUT (TPRG) FAULT– You are notified upon breakdown of your input.

   INPUT SAT– Should the input become overloaded or saturated, your alarm would activate.

   SPA FAULT– Choosing this parameter activates the alarm at any failure that occurs in the SPA²IS itself.

Note: *Enabling all fault alarm configurations will activate the alarm at any failure that occurs (refer to Table 4 in the Error Codes section of this manual).*

3. "INPUT/SENSR FAULT" appears. Press *SELECT* at "INPUT/SENSR FAULT". Dependent upon whether you wish the alarm activated due to an input fault, use the *UP* and *DOWN* buttons to scroll through the "ALARM ON" and "ALARM OFF" options. Once you have made a selection, press *SELECT*.
4. Press *SELECT* at the "INPUT SAT" display. You are given the choice of "ALARM ON" or "ALARM OFF" by using the *UP* and *DOWN* buttons. Choose your setting and press *SELECT.*
5. Next, the "SPA FAULT" menu is displayed. Press *SELECT*. Toggle between "ALARM ON" and "ALARM OFF" by using the *UP* and *DOWN* buttons and press *SELECT* when the setting you desire is displayed.
6. Press *SELECT* at "ENTER DELAY" and enter your desired delay time by using the *UP* and *DOWN* buttons.
7. At the "SET LATCH" display, press *SELECT* and choose "LATCH ON" or "LATCH OFF" using the *UP* and *DOWN* buttons; press *SELECT*.

   Refer to the "Trip Alarm Configuration" section for a description of delay and latching alarms.
8. Press *SELECT* at "SET FSAFE" to enter the menu. Then use the *UP* and *DOWN* buttons to switch from "ALARM FSAFE" to "ALARM NONFS". Make your selection and press *SELECT*.

   Refer to the "Trip Alarm Configuration" section for a description of fail safe and non fail safe alarms.

9. "RANGE ALARM" appears. Select whether or not to enable the range alarm by using the *UP* and *DOWN* buttons; press *SELECT*. If enabled "LOWER POINT" appears, then use the *UP* and *DOWN* buttons to set your lower point value, press *SELECT.* "UPPER POINT" appears, then use the *UP* and *DOWN* buttons to set your upper point value, press *SELECT.* "EXIT RANGE" appears. Press *SELECT.* "EXIT ALRM*" appears. If range alarm not enabled "EXIT ALRM*" appears.

Note: *When setting the Range Alarm, the values in Lower Point must be greater than those of the Sensor Lower Limit, and less than those set in Lower Range. When setting the Upper Point, the value must be less than the Sensor Upper Limit, and greater than those set in Upper Range.*

10. If you are to program other alarms use the *UP* and *DOWN* buttons to reach your next alarm and follow the steps described in the appropriate alarm configuration section.

    If you have completed your alarm configurations, use the *UP* and *DOWN* buttons to bypass the alarm menu. To exit, press *SELECT* at the "ALARM EXIT" display.

Figure 4.15. *CONFG ALARM Menu (Fault Alarm)*

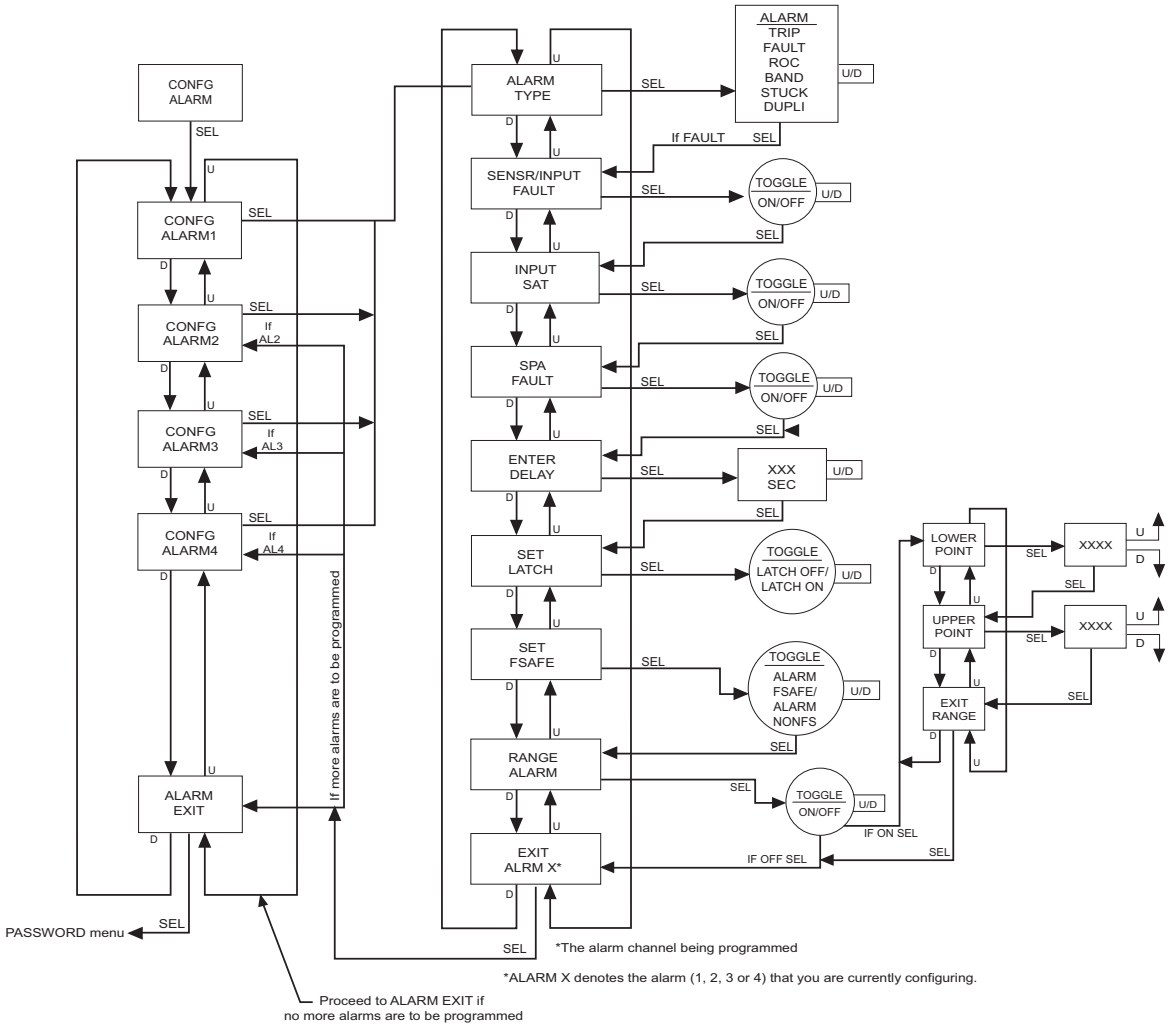

Rate of Change Alarm Configuration

Figure 4.16. gives an overview of the Rate of Change Alarm configuration menu.

If you wish to be notified when deviations outside of ranges you have set occur, use the Rate of Change Alarm. The alarm will be set according to the rate of change of the process variable over a set time period.

1. At the "CONFG ALARM" menu, press *SELECT*. Use the *UP* and *DOWN* buttons to toggle between the alarms. When the desired alarm appears, press *SELECT.*
2. At the "ALARM TYPE" menu, press *SELECT.* From here you will choose your alarm type. Use the *UP* and *DOWN* buttons to scroll through the selections. Press *SELECT* once "ALARM ROC" is displayed.
3. At "TRIGR TYPE" press *SELECT* and use the *UP* and *DOWN* buttons to set your trigger type either Fall, Rise, or Both. Press *SELECT*.

   Rise – This setting triggers alarm when value rises at a rate that exceeds the set limits.
   Fall – This setting triggers alarm when value falls at a rate that exceeds the set limits.
   Both – This setting triggers alarm when value either rises or falls at a rate that exceeds the set limits.
4. At "ENTER DELTA" press *SELECT* and use the *UP* and *DOWN* buttons to set your delta value. Press *SELECT*.

   DELTA– This is the amount by which the process variable must change.
5. At the "ENTER TIME" menu, press *SELECT*. Using the *UP* and *DOWN* buttons, set the time and press *SELECT*.

   TIME– The span (1-60sec) in which the delta must change before the alarm is set.

Note: *To set the correct value for DELTA and TIME, you need to understand the input signal noise and input averaging filter settings to prevent false trips.*

Note: *When configuring a Rate of Change alarm, "LATCH ON" must be selected in the "SET LATCH'" menu.*

6. At the "SET LATCH" display, press *SELECT* and choose "LATCH ON" using the *UP* and *DOWN* buttons; press *SELECT*.

   Refer to the "Trip Alarm Configuration" section for a description of latching alarms.
7. Press *SELECT* at "SET FSAFE" to enter the menu. Then use the *UP* and *DOWN* buttons to switch from "ALARM FSAFE" to "ALARM NONFS". Make your selection and press *SELECT*.

   Refer to the "Trip Alarm Configuration" section for a description of fail safe and non fail safe alarms.
8. "INPUT FAULT" appears. Select whether or not to enable the input failure alarm by using the *UP* and *DOWN* buttons; press *SELECT*.

   INPUT FAULT Alarm– If enabled, this alarm will notify the user upon a breakdown of input.
9. "RANGE ALARM" appears. Select whether or not to enable the range alarm by using the *UP* and *DOWN* buttons; press *SELECT*. If enabled "LOWER POINT" appears, then use the *UP* and *DOWN* buttons to set your lower point value, press *SELECT.* "UPPER POINT" appears, then use the *UP* and *DOWN* buttons to set your upper point value, press *SELECT.* "EXIT RANGE" appears. Press *SELECT.* "EXIT ALRM*" appears. If range alarm not enabled "EXIT ALRM*" appears.

Note: *When setting the Range Alarm, the values in Lower Point must be greater than those of the Sensor Lower Limit, and less than those set in Lower Range. When setting the Upper Point, the value must be less than the Sensor Upper Limit, and greater than those set in Upper Range.*

10. If you are to program other alarms, use the *UP* and *DOWN* buttons to reach your next alarm and follow the steps described in the appropriate alarm configuration section.

    If you have completed your alarm configurations, use the *UP* and *DOWN* buttons to bypass the alarm menu. To exit, press *SELECT* at the "ALARM EXIT" display.

Figure 4.16. *CONFG ALARM Menu (Rate of Change Alarm)*

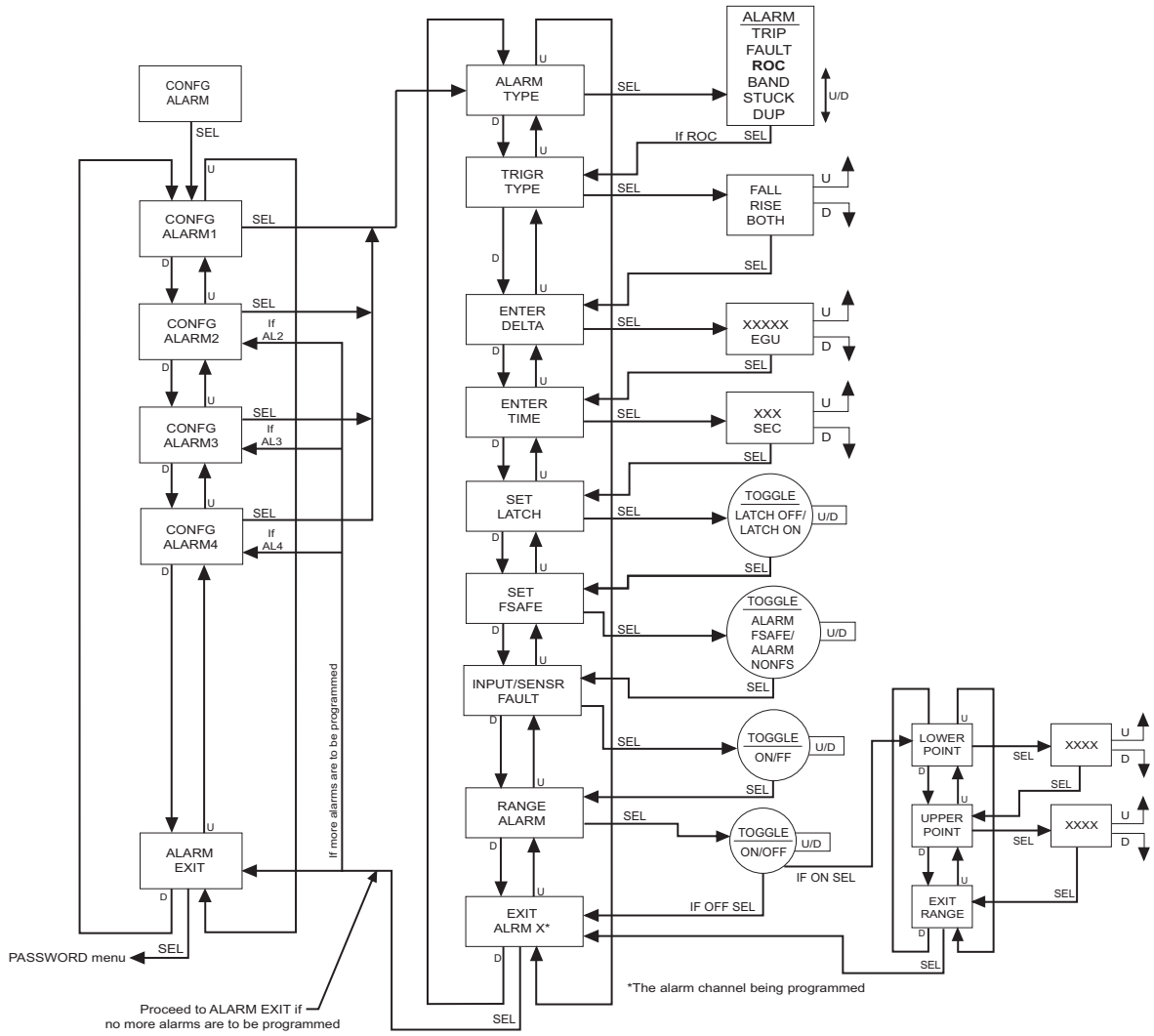

Band Alarm Configuration

Figure 4.17 gives an overview of the Band Alarm configuration menu.

Band Alarms are used if the user desires an alarm condition if a process value outside of a defined range (lower and upper trip point).

1. At the "CONFG ALARM" menu, press *SELECT*. Use the *UP* and *DOWN* buttons to toggle between the four alarms. When the desired alarm appears, press *SELECT.*
2. At the "ALARM TYPE" menu, press *SELECT.* From here you will choose your alarm type. Use the *UP* and *DOWN* buttons to scroll through the selections. Press *SELECT* once "ALARM BAND" is displayed.
3. At "ENTER TRIP 1 (TPRG)" or "ENTER LOWER (HLPRG) (Smart Ranging)" press *SELECT* and use the *UP* and *DOWN* buttons to set your ENTER TRIP 1 or ENTER LOWER value, then press *SELECT*. You also choose to use the *DOWN* button instead to select "INPUT TRIP 1 (TPRG) or INPUT LOWER (Standard Ranging)" then use the *UP* and *DOWN* buttons to select your INPUT TRIP 1 or INPUT LOWER value.
4. At "ENTER TRIP 2 (TPRG)" or "ENTER UPPER (HLPRG) (Smart Ranging)" press *SELECT* and use the *UP* and *DOWN* buttons to set your ENTER TRIP 2 or ENTER UPPER value, then press *SELECT*. You also choose to use the *DOWN* button instead to select "INPUT TRIP 2 (TPRG) or INPUT UPPER (Standard Ranging)" then use the *UP* and *DOWN* buttons to select your INPUT TRIP 2 or INPUT UPPER value.
5. Press *SELECT* at "ENTER DBAND" and enter your dead band value if using dead band. Press *SELECT* once your desired setting appears.

   Dead Band– The Dead Band is the range within which an alarm relay remains in an alarm condition even after the monitored process variable input has returned to a safe level, at or below/above the trip point setting.
6. Press *SELECT* at "ENTER DELAY" and input your desired delay time by using the *UP* and *DOWN* buttons.

   Delay– When your unit is in an alarm condition, the delay is the amount of time you set (0-120sec) to elapse before a relay trip.
7. At the "SET LATCH" display, press *SELECT* and choose "LATCH ON" using the *UP* and *DOWN* buttons; press *SELECT*.

   Refer to the "Trip Alarm Configuration" section for a description of latching alarms.
8. Press *SELECT* at "SET FSAFE" to enter the menu. Then use the *UP* and *DOWN* buttons to switch from "ALARM FSAFE" to "ALARM NONFS". Make your selection and press *SELECT*.

   Refer to the "Trip Alarm Configuration" section for a description of fail safe and non fail safe alarms.
9. "SENSOR/INPUT FAULT" appears. Select whether or not to enable the sensor or input failure alarm by using the *UP* and *DOWN* buttons; press *SELECT*.

   Refer to the "Trip Alarm Configuration" section for a description of fail safe and non fail safe alarms.
10. If you are to program other alarms, use the *UP* and *DOWN* buttons to reach your next alarm and follow the steps described in the appropriate alarm configuration section.

    If you have completed your alarm configurations, use the *UP* and *DOWN* buttons to bypass the alarm menu. To exit, press *SELECT* at the "ALARM EXIT" display.

Figure 4.17. *CONFG ALARM Menu (BAND Alarm)*

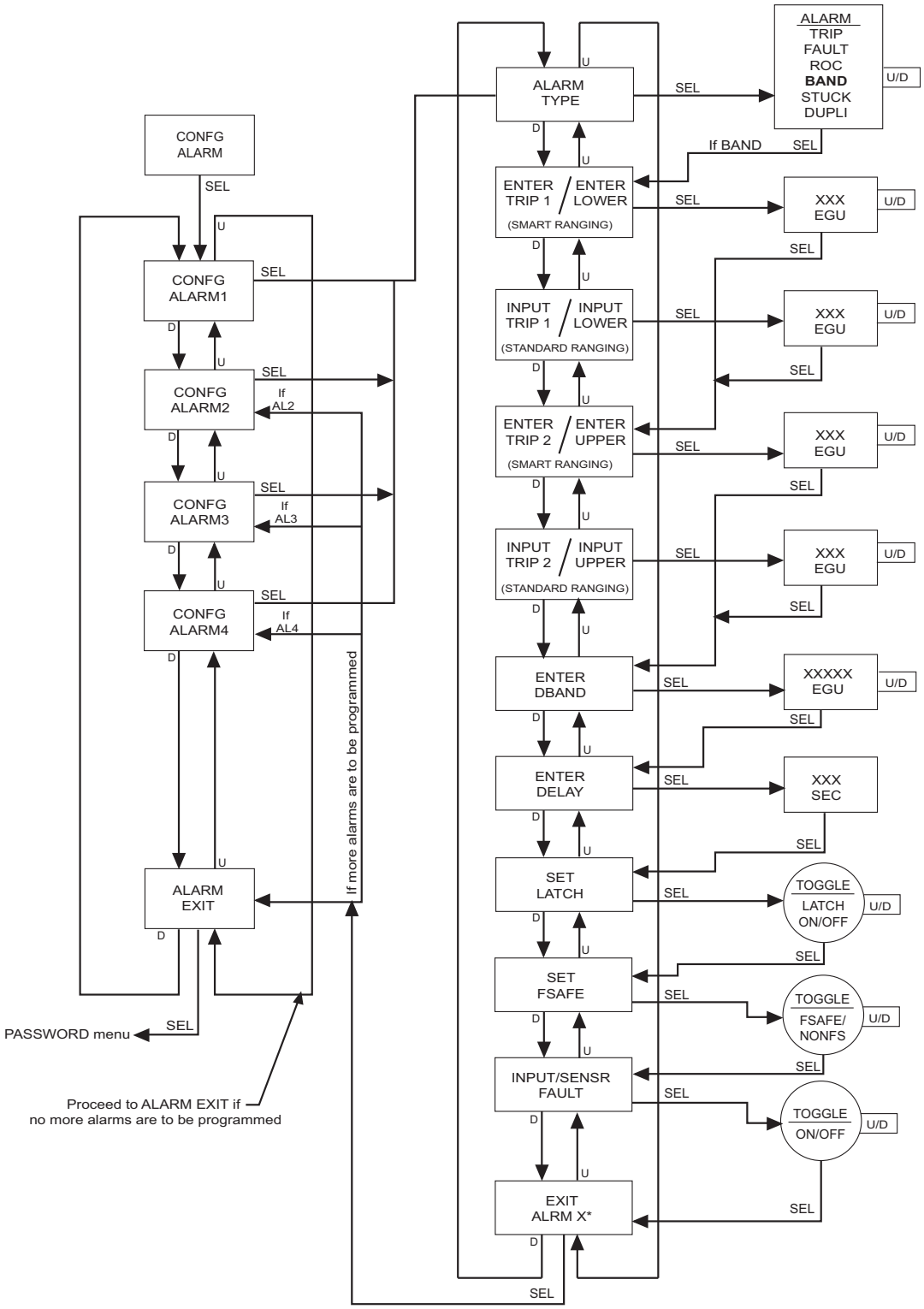

*ALARM X denotes the alarm (1, 2, 3 or 4) that you are currently configuring.

Stuck Input Alarm Configuration

Figure 4.18. gives an overview of the Stuck Input Alarm configuration menu.

If you wish to be notified when an input appears to be 'stuck' use the Stuck Input Alarm. The alarm will be set if the input does not change by the defined amount over a set time period.

1. At the "CONFG ALARM" menu, press *SELECT*. Use the *UP* and *DOWN* buttons to toggle between the alarms. When the desired alarm appears, press *SELECT.*
2. At the "ALARM TYPE" menu, press *SELECT.* From here you will choose your alarm type. Use the *UP* and *DOWN* buttons to scroll through the selections. Press *SELECT* once "ALARM STUCK" is displayed.
3. At "ENTER DELTA" press *SELECT* and use the *UP* and *DOWN* buttons to set your delta value. Press *SELECT*.

   DELTA– This is the amount by which the process variable must change.
4. At the "ENTER TIME" menu, press *SELECT*. Using the *UP* and *DOWN* buttons, set the time and press *SELECT*.

   TIME– The span (1-300sec) in which the delta must change before the alarm is set.

Note: *To set the correct value for DELTA and TIME, you need to understand the expected process variations to avoid false trips and the input signal noise and averaging filter settings to prevent missing stuck inputs.*

Note: *When configuring a Stuck Input alarm, "LATCH ON" must be selected in the "SET LATCH'" menu.*

6. At the "SET LATCH" display, press *SELECT* and choose "LATCH ON" using the *UP* and *DOWN* buttons; press *SELECT*.

   Refer to the "Trip Alarm Configuration" section for a description of latching alarms.
7. Press *SELECT* at "SET FSAFE" to enter the menu. Then use the *UP* and *DOWN* buttons to switch from "ALARM FSAFE" to "ALARM NONFS". Make your selection and press *SELECT*.

   Refer to the "Trip Alarm Configuration" section for a description of fail safe and non fail safe alarms.
8. "SENSR/INPUT FAULT" appears. Select whether or not to enable the input failure alarm by using the *UP* and *DOWN* buttons; press *SELECT*.
9. "RANGE ALARM" appears. Select whether or not to enable the range alarm by using the *UP* and *DOWN* buttons; press *SELECT*. If enabled "LOWER POINT" appears, then use the *UP* and *DOWN* buttons to set your lower point value, press *SELECT.* "UPPER POINT" appears, then use the *UP* and *DOWN* buttons to set your upper point value, press *SELECT.* "EXIT RANGE" appears. Press *SELECT.* "EXIT ALRM*" appears. If range alarm not enabled "EXIT ALRM*" appears.

Note: *When setting the Range Alarm, the values in Lower Point must be greater than those of the Sensor Lower Limit, and less than those set in Lower Range. When setting the Upper Point, the value must be less than the Sensor Upper Limit, and greater than those set in Upper Range.*

10. If you are to program other alarms, use the *UP* and *DOWN* buttons to reach your next alarm and follow the steps described in the appropriate alarm configuration section.

    If you have completed your alarm configurations, use the *UP* and *DOWN* buttons to bypass the alarm menu. To exit, press *SELECT* at the "ALARM EXIT" display.

Figure 4.18. *CONFG ALARM Menu (STUCK INPUT Alarm)*

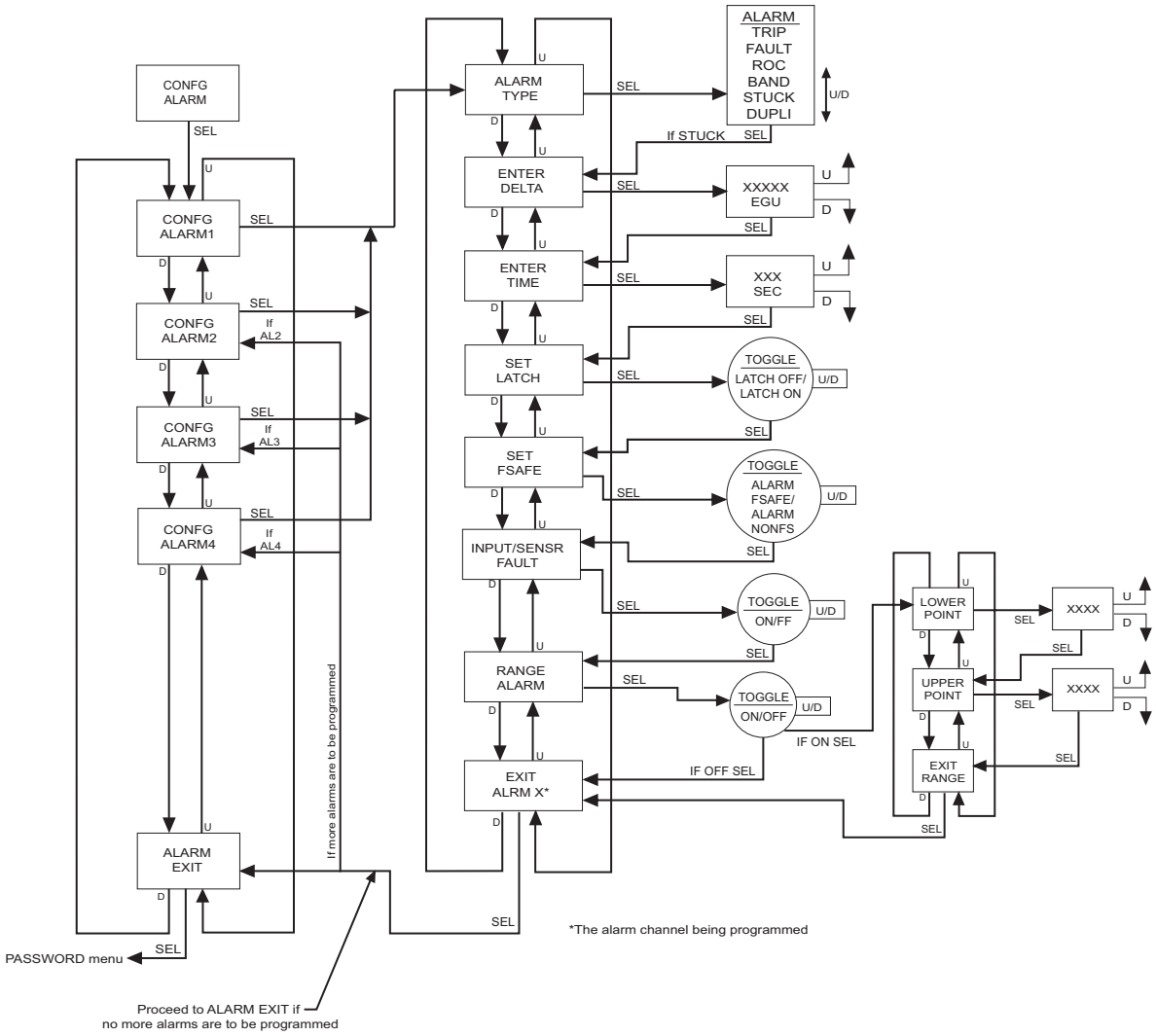

Duplicate (Copy) Alarm Configuration

Figure 4.19. Gives an overview of the Duplicate (Copy) Alarm configuration menu.

This option is not a new type of alarm. It just provides the facility to make a one time copy of an alarm configuration.

1. At the "CONFG ALARM" menu, press *SELECT*. Use the *UP* and *DOWN* buttons to toggle between the alarms. When the desired alarm appears, press *SELECT.*
2. At the "ALARM TYPE" menu, press *SELECT.* From here you will choose your alarm type. Use the *UP* and *DOWN* buttons to scroll through the selections. Press *SELECT* once "ALARM DULPI" is displayed.
3. At "COPY ALRMX" press *SELECT* and use the *UP* and *DOWN* buttons to set which alarm to duplicate. Press *SELECT*. You may also *SELECT* "COPY CANCL" to cancel the duplication process.
4. Once you press *SELECT* on any particular alarm the menu will jump top the first parameter for that duplicated alarm and allow you to modify the duplicated parameters.

Note: *When using Copy alarm make sure to check that you have updated the settings to the most current . Also be aware that if changes are made to the original alarm from which a duplicate was created, all changes will* ***not*** *be updated to the duplicate alarm if changes are made after the duplication.*

Figure 4.19. *CONFG ALARM Menu (DUPLI Alarm, Copy Alarm)*

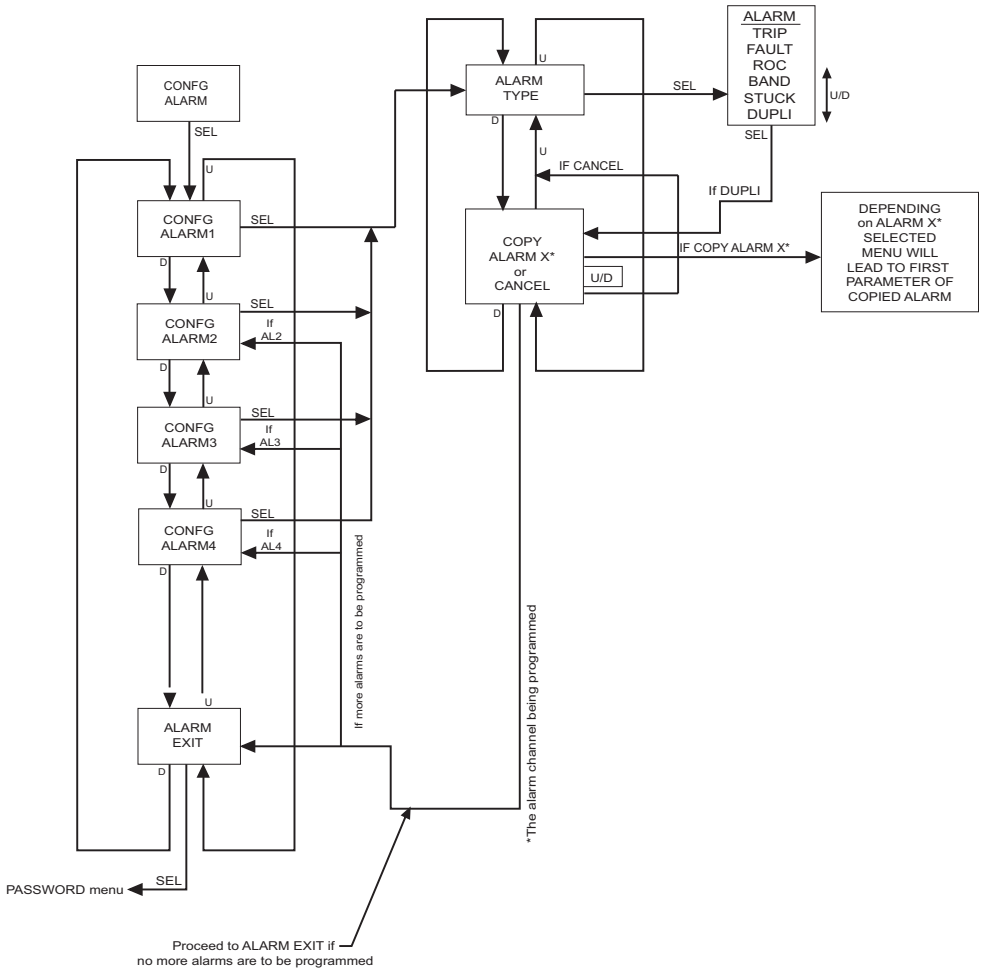

Password Configuration

Figure 4.20. gives an overview of the Password Configuration menu.

The password menu is accessible only when the security jumper is installed in the "full access" position (Figure 3.2) or when the password is entered correctly.

The last of your menus, "CONFG PASWD", is for password configuration.

1. At "CONFG PASWD", press *SELECT*. This puts you in the "PASS" menu. The previously saved password appears.
2. Use the *UP* and *DOWN* buttons to set a new password to any number between 0 and 9999. Press *SELECT*.
3. The "CONFG EXIT" option appears. Press *SELECT* to return to the process variable display.

Figure 4.20. *CONFG PASWD Menu*

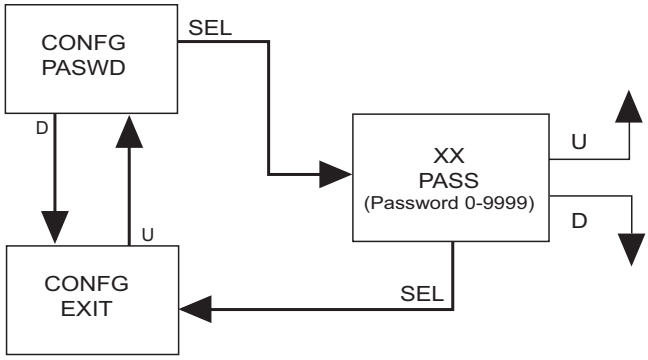

Note: *The password menu is only accessible when either the password is entered correctly or the password jumper is set to 'Full Access' (see figure 3.2).*

System Information Menu

Figure 4.21. gives an overview of the System Information menu.

This menu provides build information about the unit.

1. At the "SYS INFO" menu, press *SELECT*. Use the *UP* and *DOWN* buttons to toggle between the system information. When the desired information item appears, press *SELECT.*
2. At the "SRIAL NUMBR", press *SELECT.* Here will display the serial number for the unit.
3. At the "FW VERSN", press *SELECT.* Here will display the firmware version for the unit.
4. At the "HW VERSN", press *SELECT.* Here will display the hardware version for the unit.
5. At the "INPUT MODEL", press *SELECT.* Here will display the input model for the unit.
6. At the "OUTPUT MODEL", press *SELECT.* Here will display the output model for the unit.
7. At the "EXIT INFO" , press *SELECT.* This will exit the SYS INFO menu and leave you at CONFIG EXIT menu.

Figure 4.21. *SYS INFO Menu*

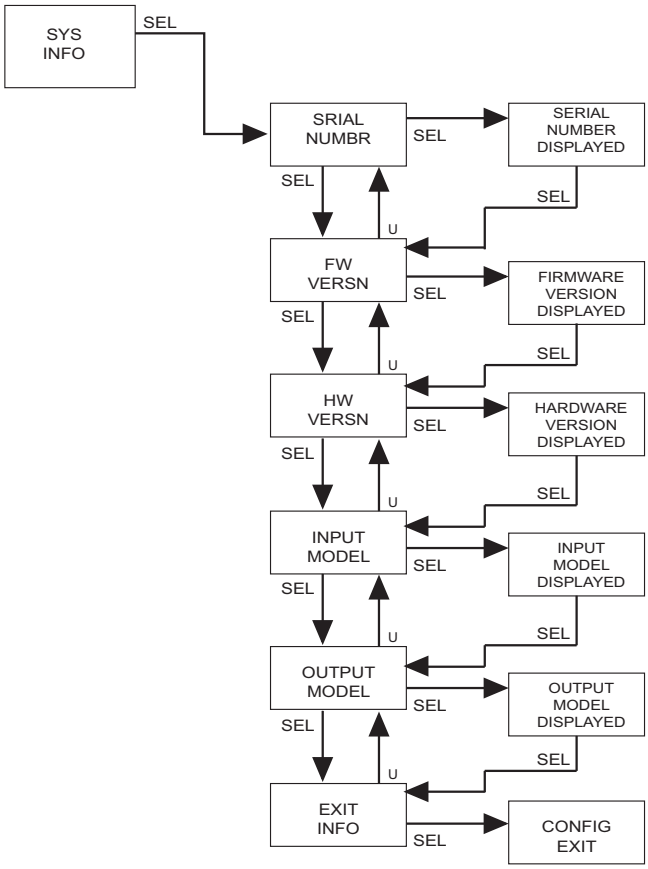

Section 5: SPA²IS PC Configuration Software

One of the benefits of the SPA²IS is that you may either use the external push button controls to set up the instrument, or use a PC and Moore Industries' Intelligent PC Configuration software.

In using the software program, settings are downloaded to the instrument in the form of a Configuration File and stored in the instrument's memory. You can save a backup copy of the file on your PC hard drive or disk. The SPA²IS communicates with the PC through our proprietry RS-232 connection to the PC's serial port, or our Fuse Protected USB Communications Cable.

Note: *Refer to the QuickStart Guide to see the default factory settings for your unit.*

Installing the Configuration Software

Refer to Table 5.1. for the equipment needed.

1. Insert the *Moore Industries Interface Solution PC Configuration Software* CD into the CD drive of the PC. Access the CD and open the "SPA²IS PC Configuration Software" folder.
2. Double-click the installation program located in the folder. Follow the prompts to correctly install the program.

Once the Configuration Program is installed onto your PC, the SPA²IS can be connected to equipment to simulate input and monitor output. You can then change the operating parameters of the alarm.

No Alarm Needed

It is not necessary to connect the SPA²IS to a PC to create configuration files using the software. The Configuration Program can be run without connecting an alarm, and ***most*** parameters can be set without benefit of input from a sensor or SPA²IS.

This makes it easy to create a set of operating parameters, save them to disk, and download them to one or more instruments at a later time.

The SPA²IS ***must*** be connected to the PC in order to: trim input, trim output, assign a tag, perform a loop test, receive (via download) a configuration file, and save the configuration file (via upload) from the SPA²IS memory.

Connecting the SPA²IS to the PC

Connect the RS-232 end of the cable to the PC's COM port.

Selecting Model Type

User must select model type when the software is opened without a unit connected as shown below. Unit type is determined by software version and input type. When a unit is connected the software will select the correct type automatically.

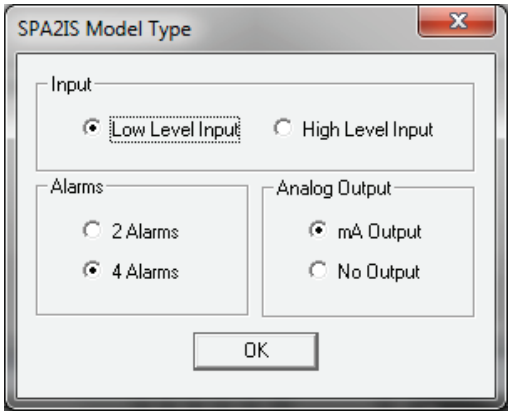

Figure 5.1. *SPA²IS HLPRG Hook-Up Diagram For PC Configuration*

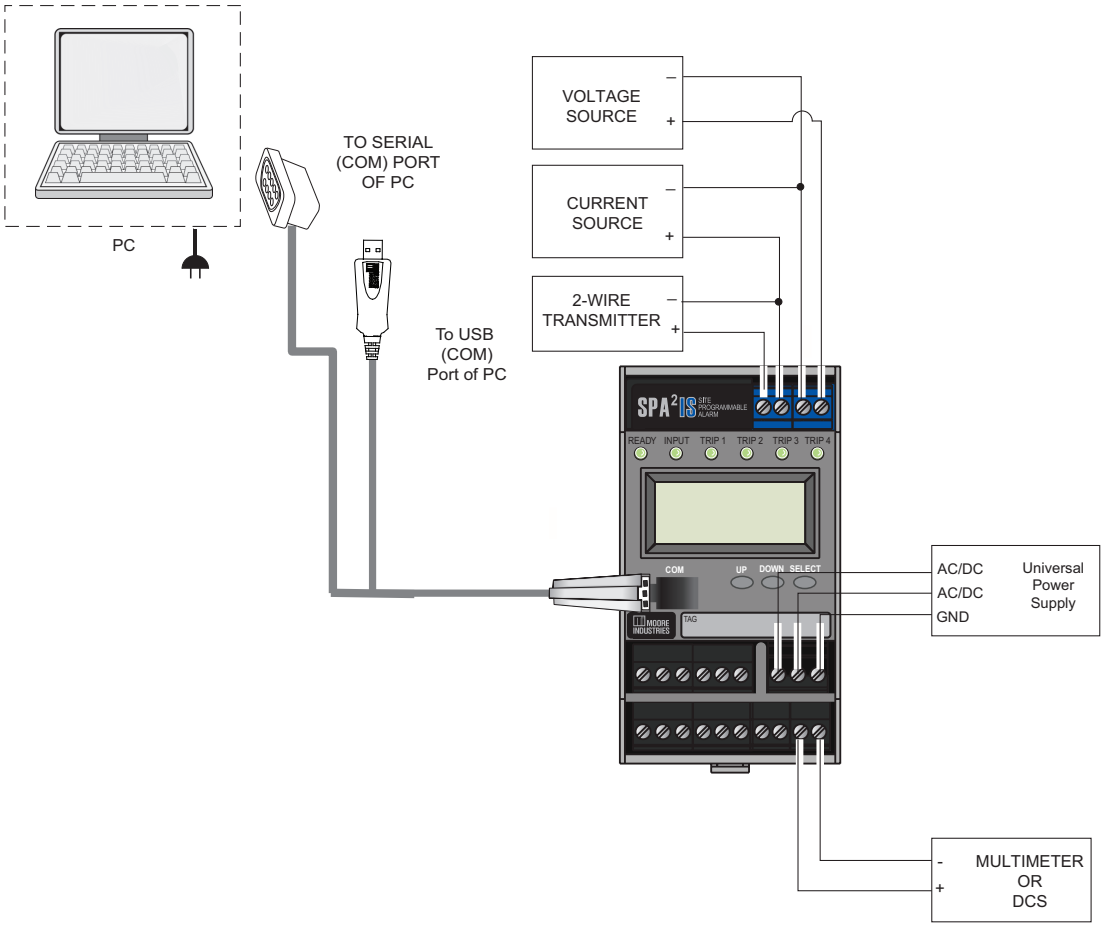

Figure 5.2. *SPA²IS TPRG Hook-Up Diagram For PC Configuration*

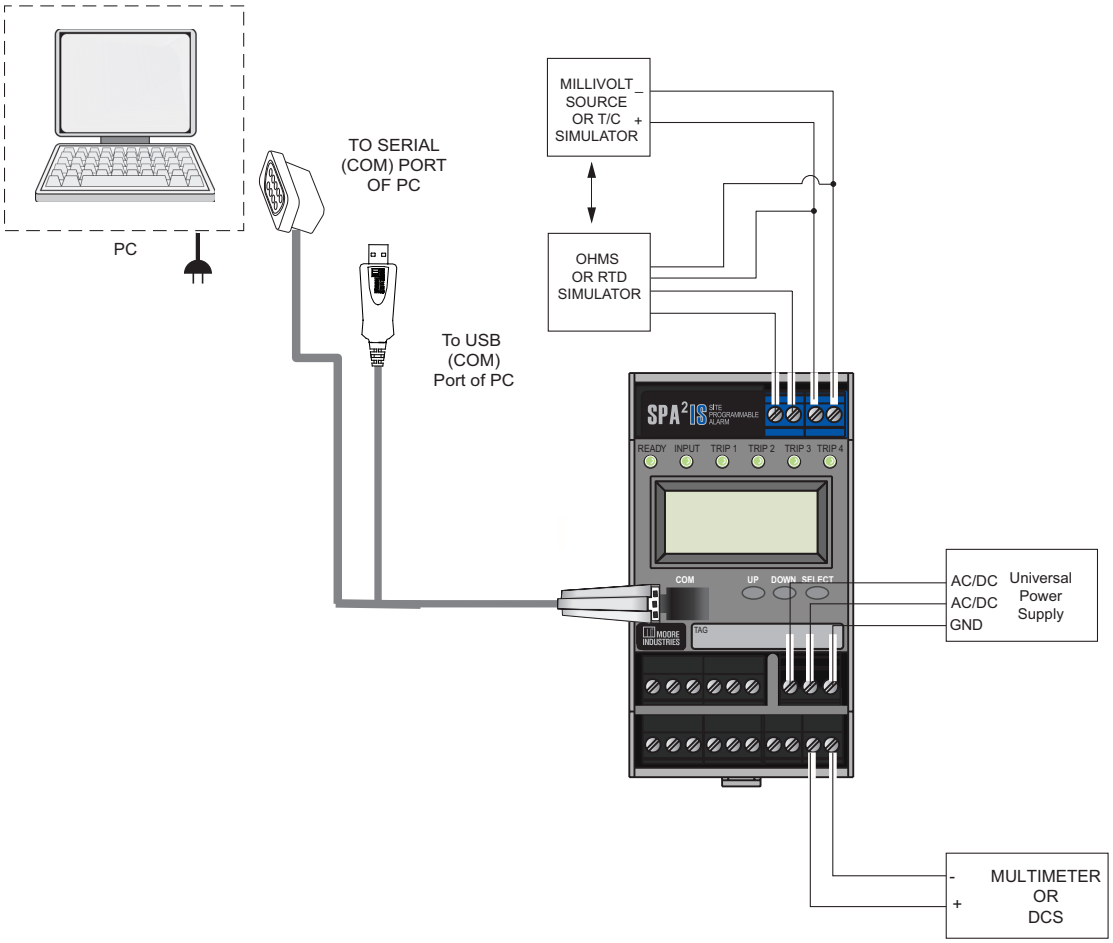

Table 5.1. *Necessary Equipment to Configure the SPA²IS*

Device	Specifications
TPRG - Variable Input Simulator for Thermocouple, RTD, Millivolt, Potentiometer, or Decade Resistance Box	Accurate to 0.05% of span for the intended application
HLPRG - Current or Voltage Source	Accurate to 0.05% of span for the intended application
Power Supply	Universal, 21.6-125Vdc/90-260Vac
Multimeter (optional)	Accurate to ±0.009% of span; e.g., HP Model 3478A
Personal Computer	Microsoft Windows based PC; 16Mb free RAM; 20MB free disk space on hard drive Microsoft Windows XP, Vista, 7, 8, or 10 (32-bit or 64-bit) 1 (one) serial port or one available USB port
Moore Industries PC Configuration Software	Version 1.0 or greater, successfully installed to the hard drive
Communication Cable or USB Cable)	Part# Communications Cable 803-053-26A, USB Cable Part# 208-236-00A, or Fuse Protected USB Cable 804-030-26A

PC Configuration Software Summary

Figure 6.1. *SPA²IS Main PC Screen (TPRG version shown)*

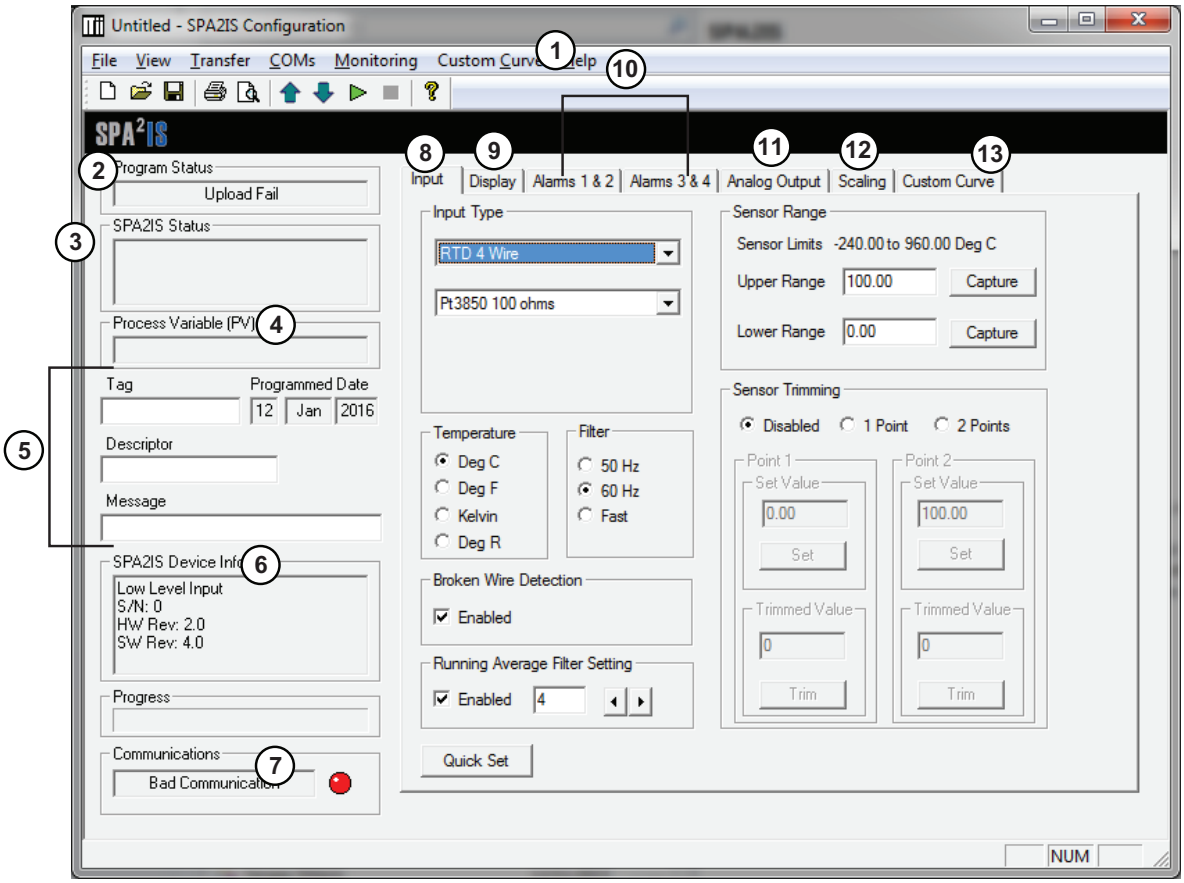

Once the default configuration has been saved to disk, it is safe to program other parameters. The PC Software is made up of these sections:

1. Tool Bar/Status Bar– Dropdown menus and corresponding icons allow you to perform various functions throughout the PC Configuration Program. Refer to the *Status and Tool Bar Legend* for a complete description.

2. Program Status– This portion of the program displays the activity of the connected unit. It will display such messages as: Reading SPA Info, Idle, Monitoring Variables and Monitor Fail.

3. SPA²IS Status– Indicates if there are problems or faults with the instrument.

4. Process Variable (PV)– Displays the selected Process Variable.

5. Identification Parameters– Use this parameter to place an identifying "Tag" (12 alphanumeric characters max.), "Descriptor" (16 alphanumeric characters max.) or "Message" (32 alphanumeric characters max.).

6. SPA²IS Device Info– This "read-only" display indicates instrument configuration, device identification, hardware revision and software revision.

7. Communications– Notifies user of current PC connection/communications status.

8. Input Tab– Use this tab to set your input parameters. Refer to the *Input* section for a complete description.

9. Display Tab– Used to set up the appearance of the SPA²IS LCD screen. Refer to the *Display* section for a complete description.

10. Alarms Tab (1 & 2 and 3 & 4)– Alarm parameters are configured using these windows. Alarms 1 & 2 are located in the same window. Alarms 3 & 4 are grouped together in another window. Refer to the *Alarms* section for a complete description.

11. Analog Output Tab– Configuration of the analog output (if your instrument is equipped with the -AO option) is performed here. Refer to the *Analog Output* section for a complete description.

12. Scaling Tab– If you choose to enable the scaling feature, the parameter would be configured at this window. Refer to the *Scaling* section for a complete description.

13. Custom Curve Tab– The SPA²IS has two modes of operation: linear mode and custom mode. In linear mode, the scaled output is proportional to the scaled input. In custom mode, reached by selecting the *Custom Curve* tab, you define a special linearization function. Refer to the *Custom Curve* section for a complete description.

Note: *The Custom Curve parameter can ONLY be configured using your PC and PC Configuration Software Program. It cannot be configured using he front panel push buttons.*

Status and Tool Bar Legend

File	Allows such functions as New, Open, Save and Print
View	Controls whether Tool and Status Bars are viewed on the screen
Transfer	Allows you to Upload and Download configurations
Comms	Select the PC Port (Com Port) that you will use
Monitoring	Allows you to Monitor and Stop monitoring processes
Custom Curve	Provides functions specific to your Custom Curve table
Help	Displays the version of the SPA²IS Configuration Program

Configuration Screens

Note: *Unless otherwise noted, ensure that the PC Program is idle before making any selections or configuration changes to the parameters and windows of the program. Also, when attempting to download, upload or Quick Set, monitoring must be stopped. To do this, click "Stop" in the Monitoring dropdown menu, or click the "Stop Monitoring" icon.*

Figure 6.2. *Input Tab*

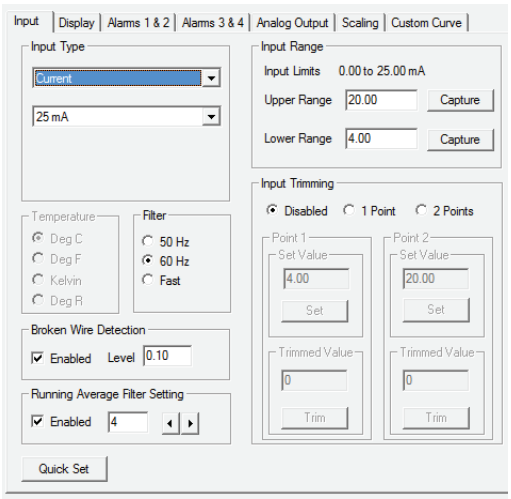

HLPRG

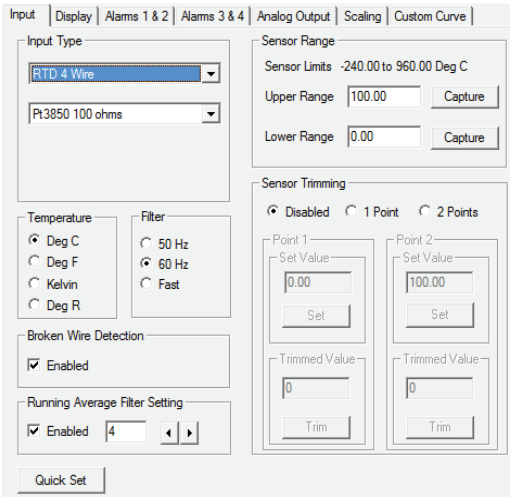

TPRG

Input

Input Type (HLPRG)– Select your input configuration (Current or Voltage) and the respective range of your input.

Sensor Type (TPRG)– Select your sensor type and the respective range of your input..

Filter– This setting is used to configure the input filter. This filter is designed to reduce the effects of mains-induced noise. The input filter frequency value should be set to the frequency of the local AC supply– either 50Hz or 60Hz. For faster response times, the filter may be disabled by selecting "Fast".

Note: *A faster response time can be achieved when selecting the Fast option, but this also will produce a reduced accuracy and increase the possibility of mains-induced noise. Selecting FAST option will also disable the Running Average Filter Setting automatically.*

Broken Wire Detection– Refer to the "***Caution***" on Page 34 regarding Broken Wire Detection. The SPA²IS monitors your process variable. If the monitored value falls equal to or below a set value, then a state of Broken Wire is declared.

1. Check the "Enabled" box in order to activate Broken Wire Detection.
2. In the "Level" textbox, enter the set value you choose as your limit. The value that you enter must be greater than zero and less than your "Lower Range" value (see *Input Range*).

Running Average Filter Settings– This function is for filtering the input signal. The SPA²IS provides this filter with a user-selected range between 1 and 64. Factory default is 4. This setting is only available through the PC Configuration Software, and cannot be set using push-button menus on the SPA²IS unit.

Note:
A higher Running Average Filter setting provides smoother output transitions; however, reduces response time. Conversely, a lower setting provides a faster response time, but may seem more unstable. Typical Alarm Response time for Running Average Filter equal to 1 is 256ms. Having the filter on will affect the performance of time based alarms like the Rate of Change and Stuck Alarms.

Input/Sensor Range– Allows you to set your upper and lower range values within the range chosen in the *Input Type* section.

The desired Upper and Lower Range settings can be entered via your PC keyboard or captured. To capture an input, follow the steps below.

1. Apply the desired Upper Range input and press the corresponding "Capture" button.
2. Repeat Step 1 to configure the Lower Range value.

Input/Sensor Trimming– Input Trimming increases the measurement accuracy of your instrument by matching the reading of its actual input to either a calibrated source or the device to which it is connected. This verifies that the input to the transmitter is being interpreted correctly.

You may trim any point between 0% and 100% along the scale. Note that one-point trimming applies an offset to the input reading, while two-point trimming applies both an offset and a gain.

Follow the steps below in order to perform input trimming.

1. Select either "1 Point" (one-point trimming) or "2 Points" (two-point trimming) by clicking the appropriate button. Each pair consists of "Set Value" and "Trim" fields.
2. Enter the values that require trimming into the "Set Value" field and click "Set".
3. Apply the targeted signal to the input, wait until it settles and click "Trim" to capture the measured value. If you chose "2 Points", repeat the step above for the second point.

Note:
Once you have configured all parameters, download to the unit by ecting "Download" in the Transfer dropdown menu located in the Status Bar. Or, click the button in the Tool Bar.

You may also use the *Quick Set* feature to configure your *Input* parameters and download the settings.

Configure your parameters and click the *Quick Set* button in the window. The settings you have chosen will be applied and downloaded to your unit.

Figure 6.3. *Display Tab*

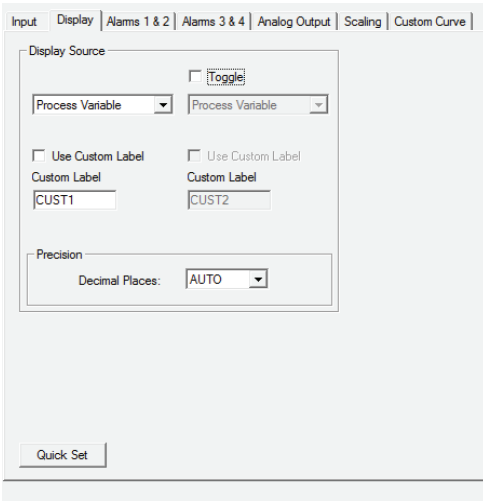

Display

Display Source– By selecting the "Toggle" check box, you can choose to view multiple forms of your display. Your selections will toggle every few seconds to display each setting.

Toggle Mode– Every four seconds your display will toggle between two displays that you choose.

Normal Mode– Displays only your PV, AOUT, or RJC (TPRG only) value, whichever you select.

Use Custom Label– You can choose to assign a specific label, or EGU (Engineering Unit).

1. Check the "Use Custom Label" box.
2. Enter the value you wish viewed into the "Custom Label" text box.

Precision– Select the number of decimal places/resolution of your display.

Note: *Once you have configured all parameters, download to the unit by selecting "Download" in the Transfer dropdown menu located in the Status Bar. Or, click the button in the Tool Bar.*

You may also use the *Quick Set* feature to configure your *Display* parameters and download the settings.

Configure your parameters and click the *Quick Set* button in the window. The settings you have chosen will be applied and downloaded to your unit.

Alarms

Figure 6.4. *Alarms Tab*

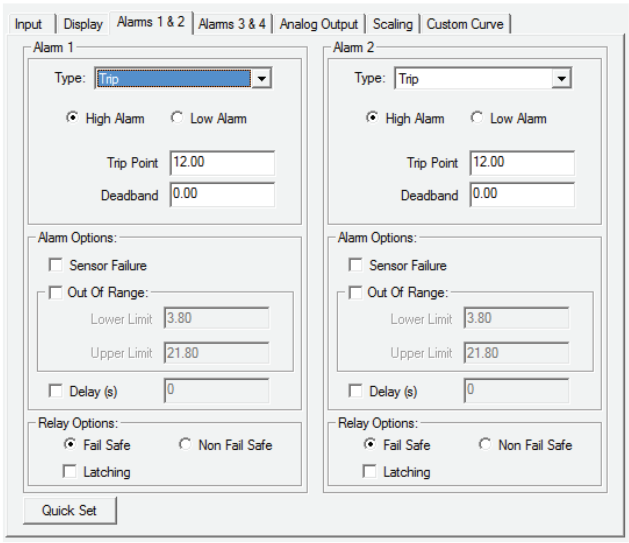

These instructions apply to Alarms 1 through 4.

Type: Select your desired alarm type using the drop-down list.

Trip– Notifies you if your process input drops below or exceeds your trip point setting.

Band– Notifies you when the process input falls outside of your selected range.

Rate of Change– Used if you wish to be notified when deviations occur outside of ranges you have set.

Stuck Input– Notifies you when process input stops changing.

Fault– Alerts the user of a fault whenever one has been sensed.

Dupl (copy) Alarm X– Allows you to automatically copy another specific Alarm setting.

For more information on the alarm types please refer to the Alarm Terminology section in the Introduction.

Common Alarm Features:

When selecting Trip, Band, Stuck Input, Fault, or Rate of Change Modes you can additionally select the following alarm features:

Sensor Failure – You are notified upon breakdown of your input.

Out of Range – When selected, you can specify the lower point and upper point in which you want to be notified when readings occur outside of upper or lower range points you have set. This is not applicable when using Band Alarm.

Note: *When setting Out of Range Lower Point the Lower Point must be less than Lower Range Value (set in the Senor Range section in Input Tab) and greater than the Lower Sensor Limit. Additionally when setting the Out of Range Upper Point the Upper Point must be greater than the Upper Range Value (set in the Senor Range section in Input Tab) and less than the Upper Sensor Limit.*

Delay– When your unit is in an alarm condition, the delay is the amount of time you set (0-120sec) to elapse before a relay trip. Enter your delay time into the "Delay" text box. This is not applicable when using Rate of change or Stuck Input alarms.

Fail Safe/Non Fail Safe– A Fail Safe alarm, if in the alarm condition, will remain in the alarm condition even if power to the unit is removed. Its alarm trip relays are energized whenever the process input is in a non-alarm condition (including any dead band setting). These relays de-energize when the process input trips the alarm.

Non Fail Safe alarm trip relays are energized whenever the process input is in an alarm condition. These relays de-energize when the process input returns to the reset point (including any dead band). To Select a Fail Safe or Non Fail Safe alarm, and click the corresponding button.

Latching– The alarm will latch after being activated and requires a manual reset. Select the "Latching" check box if you choose this alarm type.

Manual Reset
A latching alarm requires a manual reset. There are two connections labeled "MR" on the SPA²IS top terminal block. These terminals work in-conjunction with the latching alarm function.

When a SPA²IS is configured with latching alarms, an alarm condition will not "clear", that is, the relay will not change state, until the input returns to a non-alarm state ***AND*** these manual reset terminals are shorted.

Note: *The alarm latching function is effectively disabled if the manual reset terminals remain shorted.*

Trip Alarm

Choosing the Trip Alarm, you are prompted to complete the following fields:

Trip Point– The reference value used for notification.

In choosing your limits you are setting the parameters for your unit to notify you if your process input drops below (Low Alarm) or exceeds (High Alarm) your trip point setting.

1. Select the "High Alarm" or "Low Alarm" button.
2. Enter the value you wish set as the trip point in the "Trip Point" text box.

Dead Band– The Dead Band is the range in which an alarm relay remains in an alarm condition even after the monitored process variable input has returned to a safe level, at or below/above the trip point setting.

1. If choosing to use a dead band value, enter it into the "Dead Band" text box

Note: *Once you have configured all parameters, download to the unit by selecting "Download" in the Transfer dropdown menu located in the Status Bar. Or, click button in the Tool Bar.*

Note: *If two alarms have been set with one configured to trip in the case of a broken wire and the other to trip due to another selected parameter and an actual Broken Wire failure occurs, both the* ***Out of Range*** *and Broken Wire alarms may trip.*

Band Alarm

The Band Alarm can be configured in one of two ways, selectable by a pair of radio buttons:

Midpoint – When the Midpoint radio button is selected, you are prompted to select the midpoint of your process variable and the maximum deviation from that midpoint that is allowed before the alarm trips**.**

Low/High Trip Points – When the Low/High Trip Points radio button is selected, you are prompted to enter Low Trip point and High Trip point values. The alarm will activate if the process input goes below the Low Trip point or above the High trip point.

Dead Band– The Dead Band is the range in which an alarm relay remains in an alarm condition even after the monitored process variable input has returned to a safe level, at or below/above the trip point setting.

Note: *Once you have configured all parameters, download to the unit by selecting "Download" in the Transfer dropdown menu located in the Status Bar. Or, click button in the Tool Bar.*

Note: *If two alarms have been set with one configured to trip in the case of a broken wire and the other to trip due to another selected parameter and an actual Broken Wire failure occurs, both the* ***Out of Range*** *and Broken Wire alarms may trip.*

Rate of Change Alarm

The fields below must be configured in order to set up your Rate of Change Alarm properly. The alarm will be set according to the rate of change of the process variable over a set time period.

Rise/Fall/Both– Select **Rise** if you want the alarm to trip on rising input (positive change) only. Select **Fall** if you want the alarm to trip on falling input (negative change) only. Select **Both** if you want it to trip on either falling or rising input (absolute change).

Enter the **Delta** and **Delta Time** (1-60 seconds) to set up the alarm. You may enter a value for Delta of less than one through the PC Configuration Program only. The alarm will trip if the process variable changes by more than the Delta value with the Delta Time.

Note: *To set the correct value for Delta and Delta Time, you need to understand the input signal noise and input averaging filter settings to prevent false trips.*

Note: *Once you have configured all parameters, download to the unit by selecting "Download" in the Transfer dropdown menu located in the Status Bar. Or, click button in the Tool Bar.*

You may also use the *Quick Set* feature to configure your *Alarm* parameters and download the settings. The settings you have chosen will be applied and downloaded to your unit

Note: *If two alarms have been set with one configured to trip in the case of a broken wire and the other to trip due to another selected parameter and an actual Broken Wire failure occurs, both the* ***Out of Range*** *and Broken Wire alarms may trip.*

Fault Alarm

The Fault Alarm enables the fields outlined below. Select the type of Fault Alarm you require in your application.

Input Saturation– Should the input become overloaded, or saturated, your alarm would activate.

SPA² Failure– Choosing this parameter activates the alarm at any internal failure that occurs.

Note: *Enabling all fault alarm configurations will activate the alarm at any failure that occurs (refer to Table 4 in the Error Codes section of this manual).*

Note: *Once you have configured all parameters, download to the unit by selecting "Download" in the Transfer dropdown menu located in the Status Bar. Or, click button in the Tool Bar.*

Note: *If two alarms have been set with one configured to trip in the case of a broken wire and the other to trip due to another selected parameter and an actual Broken Wire failure occurs, both the* ***Out of Range*** *and Broken Wire alarms may trip.*

Stuck Input Alarm

The fields below must be configured in order to set up your Stuck Alarm properly. The alarm will be set according to the minimum change of the process variable over a set time period.

Enter the **Delta** and **Delta Time** (1-300 seconds) to set up the alarm. The alarm will trip if the process variable does not change by more than the Delta value with the Delta Time.

Note: *To set the correct value for delta and delta time, you need to understand the expected process variations to avoid false trips and the input signal noise and averaging filter settings to prevent missing stuck inputs.*

Note: *Once you have configured all parameters, download to the unit by selecting "Download" in the Transfer dropdown menu located in the Status Bar. Or, click button in the Tool Bar.*

Note: *If two alarms have been set with one configured to trip in the case of a broken wire and the other to trip due to another selected parameter and an actual Broken Wire failure occurs, both the* ***Out of Range*** *and Broken Wire alarms may trip.*

Duplicate (Copy) Alarm

This allow you to select and copy settings from any other of the 3 alarms available.

Note: *After copying an alarm, changing either the settings in the alarm that was copied from or the alarm that was copied to will not affect the other alarm.*

Analog Output

Figure 6.5. *Analog Output (-AO) Tab*

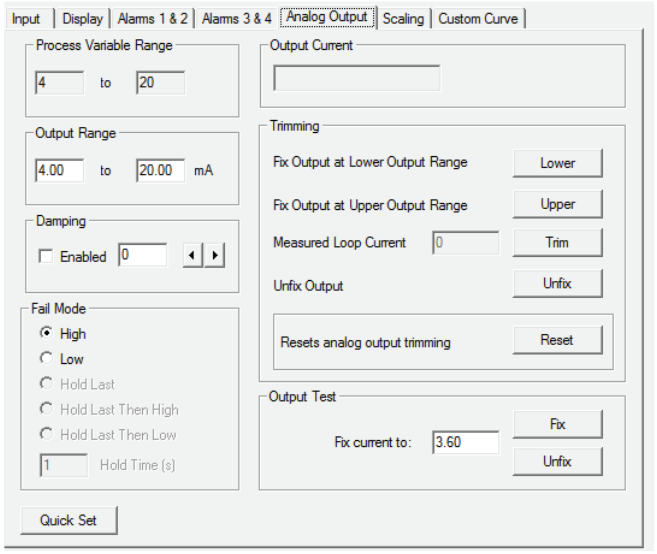

If your instrument is equipped with the -AO option, proceed with the following instructions:

Process Variable Range– Displays the selected process variable range in the "Measurement Mode" section of the *Input* screen.

Output Range– Sets your output limits.

Set your Output Range. Enter a low and high value .

Damping– Output Damping allows you to introduce a delay (0-30sec) into the response of your unit in order to stop short-lived spikes from setting off alarms.

Select "Enabled" if you choose to use Damping.

Enter your damping time into the "Damping" text box.

Fail Mode– In the case of an input failure, you have the ability to set a mode you choose to alert of the failure.

High/Low– Choosing either of these options will send the output to a High (23.6mA) or Low (3.6mA) fail mode, respectively.

Hold Last (TPRG) – This will display the last value present before the failure.

Hold Go-Hi/Hold Go-Lo (TPRG) – This will hold the last value before failure, for a set time, and then return to the High or Low value, depending on configuration.

Note: *Once you have configured all parameters, download to the unit by selecting "Download" in the Transfer dropdown menu located in the Status Bar. Or, click button in the Tool Bar.*

You may also use the *Quick Set* feature to configure your *Analog Output* parameters and download the settings.

Configure your parameters and click the *Quick Set* button in the window. The settings you have chosen will be applied and downloaded to your unit.

Output Current – Displays the value presently at your output.

Trimming– Output Trimming increases the accuracy of your instrument by calibrating its analog output to the device that is receiving the output. This ensures that the instrument is being correctly interpreted. Refer to Figure 25 for hook-up.

1. Click the "Lower" button to trim the Lower Output Range.
2. To "fine tune" trimmed values, place the value read on the external multimeter, connected to your instrument for trimming, in the "Measured Loop Current" text box and click "Trim".
3. Click the "Upper" button and repeat Step 2 to trim the Upper Output Range.
4. Once you have perfomed your output trimming, click "Unfix".

Note: *Do not click the "Reset" button in the Trimming menu unless you want to disregard your trimmed values and return to the manufacturer's trim values.*

Output Test– This test may be performed in order to check output performance and accuracy and to trim other instruments in your setup. Your output will be a current value, in mA, equal to the value you enter into the text box. You can check the other devices on the system and calibrate them to this signal.

This feature is independent of the input. If you find that the output requires adjustment, you may perform the Trimming function.

1. Ensure that SPA²IS monitoring is stopped. In the "Fix current" text box, enter a value between 0-20mA (for current) and click the "Fix" button.
2. Return to monitoring the SPA²IS. You will see the "fixed" value in the "Output Current" display and on the external multimeter.
3. Once you have finished, click "Unfix".

Note: *While performing Analog Output Trimming functions, you may notice a message in the "SPA²IS Status" display reading "**OUTPUT FIXED**". Clicking the "Unfix" button will clear this message.*

Figure 6.6. *SPA²IS HLPRG Trimming Hook-Up Diagram For PC Configuration*

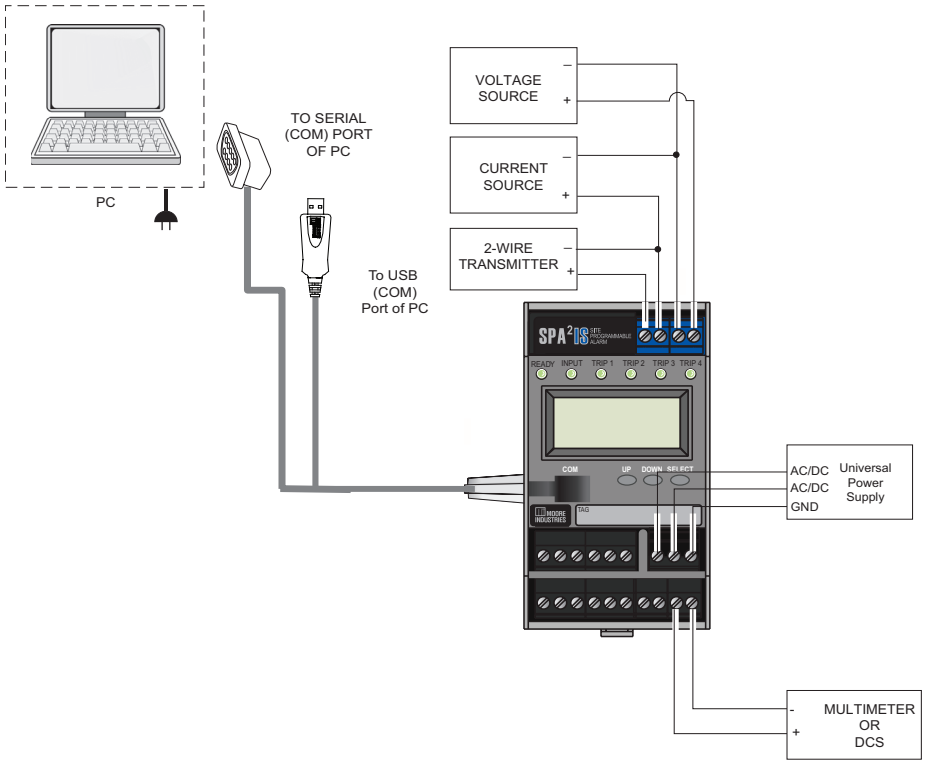

Figure 6.6. *SPA²IS TPRG Trimming Hook-Up Diagram For PC Configuration*

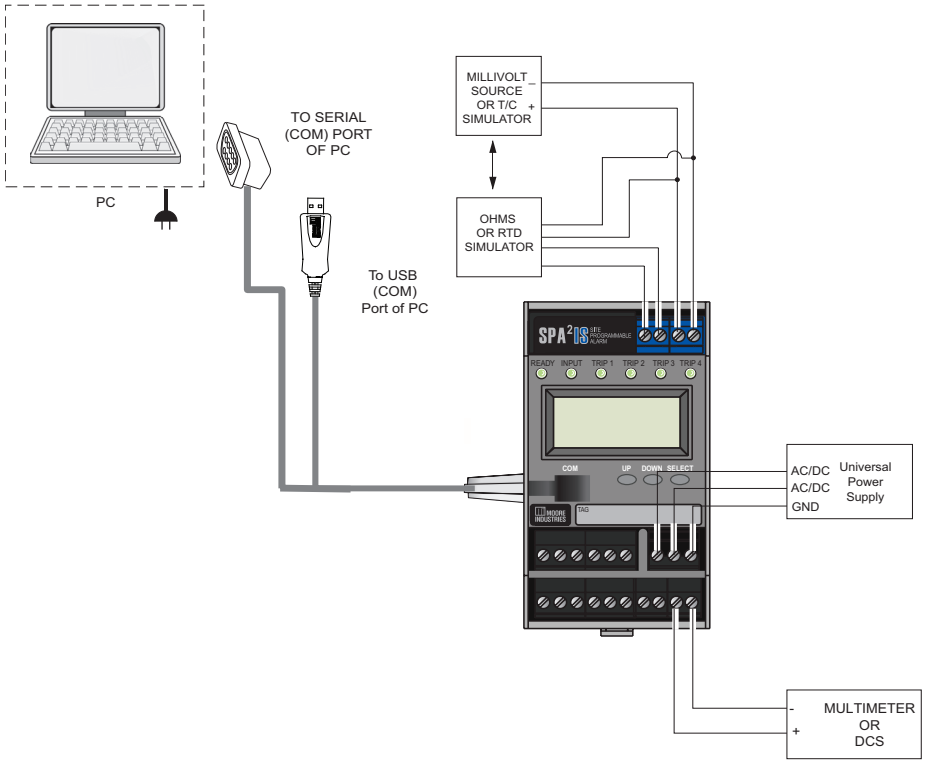

Scaling

Figure 6.7. *Scaling Tab*

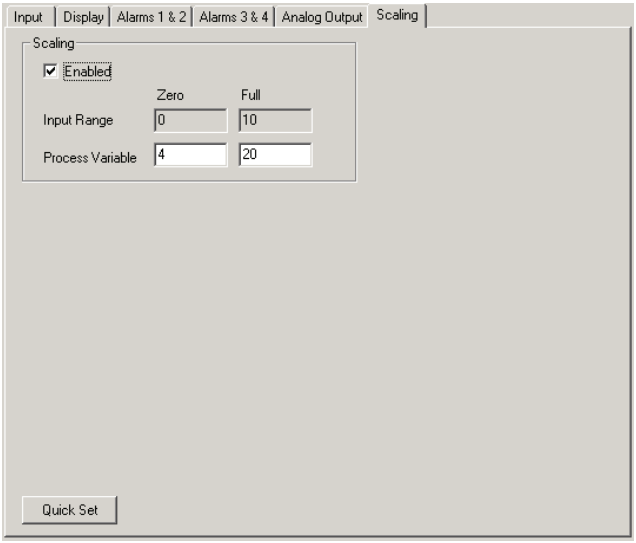

Note: *Using the Scaling feature will disable the Custom Curve capability. Since both are scaling features used to manipulate the appearance of your process variable, only one of these functions may be used at a time.*

Scaling– This allows you to customize your display for your application. By example: if your process is sending a 4-20mA signal to the SPA²IS and you wish to view the input as 0-100% then this can be accomplished with the Scaling feature.

To scale your instrument, perform the following steps.

1. Click the "Enabled" check box.
2. The "Input Range" boxes (in the *Scaling Tab)* will display the range selected in the "Input Range" section of the *Input* screen.
3. In the "Process Variable" text boxes, enter the values you wish displayed when your input is at its Lower Range and Upper Range.

Once downloaded, your unit will display the scaled values on its LCD.

Note: *In our above example, you may also wish to go to the Display screen and click on "Use Custom Label" and enter "PCT" (percent) as your new label.*

Note: *Once you have configured all parameters, download to the unit by selecting "Download" in the Transfer dropdown menu located in the Status Bar. Or, click button in the Tool Bar.*

You may also use the *Quick Set* feature to configure your *Scaling* parameters and download the settings.

Configure your parameters and click the *Quick Set* button in the window. The settings you have chosen will be applied and downloaded to your unit.

Custom Curve

Figure 6.8. *Custom Curve Tab*

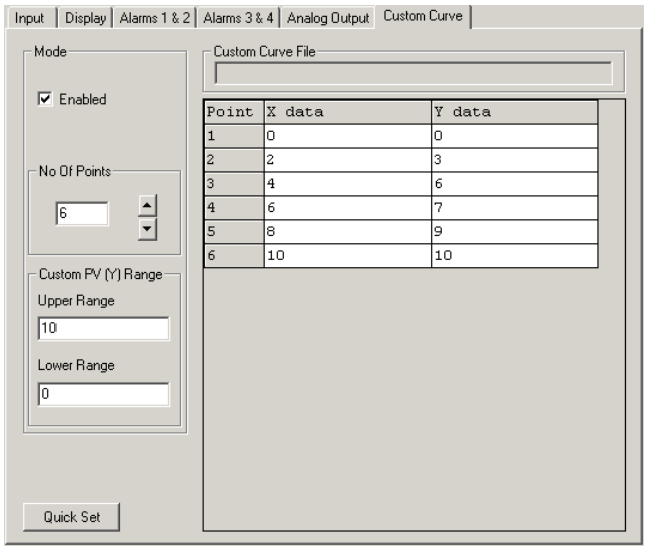

Note: *Using the Custom Curve feature will disable the Scaling capability. Since both are scaling features used to manipulate the appearance of your process variable, only one of these functions may be used at a time.*

Custom Curve–The Custom Curve feature allows you to set up your own custom curve table. This allows you to tell the transmitter what it should output when it receives a certain input. This feature also allows you the ability to write a table in Microsoft® Excel, save it in a .csv format, and import it into the Configuration Software. This makes it simple to save the custom table for downloading to multiple units or for backup purposes.

To create a custom curve:

1. Click the "Enabled" box .
2. Select the number of points for your curve (128 points maximum) and enter it into the "No Of Points" text box.
3. In the "Custom PV (Y) Range" text boxes, enter the values you wish displayed when your input is at its upper and lower ranges.
4. Type your individual values in the X and Y columns. Source variables are inserted into the X Column while the corresponding data is inserted into the Y Column.
5. After all of your data has been entered, you must use the *Custom Curve* dropdown menu to save your newly created custom table ("Save Custom Curve") and to download it to your SPA²IS ("Download Custom Curve"). See Figure 6.9.

Figure 6.9. *Custom Curve Dropdown Menu*

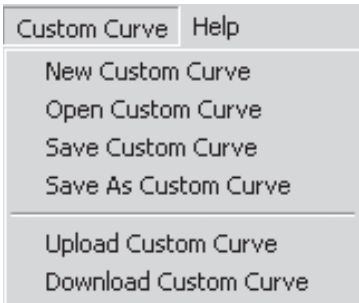

Note: *Once you have configured all parameters, download to the unit by selecting "Download" in the Transfer dropdown menu located in the Status Bar. Or, click button in the Tool Bar.*

You may also use the *Quick Set* feature to configure your *Custom Curve* parameters and download the settings.

Configure your parameters and click the *Quick Set* button in the window.

Note: *When the Custom Curve feature is enabled for your unit, the SPA²IS will display "CC" in the lower left corner of its LCD.*

Section 6: Operation and Maintenance

Operation

Once calibrated, installed, and supplied with the correct power, the SPA²IS begins to operate immediately. Depending upon environmental conditions, it can be expected to operate unattended for extended periods of time.

The SPA²IS has a high level of diagnostic capability to continually monitor itself and its input. If problems are encountered the SPA²IS will provide messages on it's display.

For a full list of diagnostic messages and corrective actions please refer to Table 6.1 .

Table 6.1. *SPA²IS Display Diagnostic Messages*

Error Message	What it Means	What to Do
***ERROR ADC**	ADC watchdog failure	Cycle power to the unit, and if the error occurs again, return the unit to the factory for service.
***ERROR RAM**	EEPROM Error - The internal processor failed	
***ERROR CALIB**	Calibration data bad - The factory-set calibration of the unit has failed to initialize	
***ERROR CKSUM**	Configuration or calibration data checksum mismatch	
***ERROR BLANK**	EEPROM blank	
***ERROR SPA2**	Other or combination of errors	
***ERROR RJC**	Reference Junction Compensation Resistor Burnout	
***ERROR WDOG**	Watchdog failure	
***ERROR SWDOG**	Software Watchdog failure	
ERROR OUT OF LIMIT	The input is out of the custom table or RTD/TC table limits	Check input signal to ensure that it is within table limits.
ERROR UNDER RANGE or ERROR OVER RANGE	Process variable out of range (<-99999 or >+99999)	Check input signal to ensure that it is within sensor limits.
ERROR INSAT	Input saturation condition (reaches 110% of calibrated range)	
ERROR INPUT	Input error condition	
***ERROR DZERO**	Maths division by zero error	Cycle power and download configuration data. If the error occurs again, return the unit to the factory for service.
***ERROR CONFG**	Configuration information bad	Cycle power to the unit, then run through the configuration menus to ensure that the technician made the correct sensor selections, range settings, etc.
WIRE 1 BROKE	Wire 1 broken	Check your system for a broken wire(s). Fasten any loose wiring; replace broken wires.
WIRE 2 BROKE	Wire 2 broken	
WIRE 3 BROKE	Wire 3 broken	
WIRES BROKE	Wire 4 broken or more than one wire broken	

*This will induce a "SPA²IS Failure" condition in a configured Fault Alarm.

Maintenance

Moore Industries recommends that the calibration of this instrument should be checked every year and re-calibrated only when necessary. In addition, we suggest a quick check for terminal tightness and general unit condition. Always adhere to any site requirements for programmed maintenance.

Section 7: SPA²IS Applications

SPA²IS is an associated apparatus which incorporate an intrinsically safe barrier within the alarm trip. This dramatically reduces the cost of purchase, installation and maintenance versus more traditional approaches that require a separate zener or isolating barrier.

See the white paper: ***"Associated Apparatus: The Safe and Most Affordable IS Solution"*** for a more detailed overview of Associated IS Apparatus.

The following are examples of typical SPA²IS configurations.

Process Heater Temperature Monitoring and Alarming

Application: Measure the outlet temperature of a process heater using an existing 4-wire RTD which is located in the hazardous area.

The SPA²IS TPRG version with –AO option and 2 alarms is located in the control room and connects directly to the RTD in the hazardous area. The analog output and 2 alarm trips are connected to the DCS and configured to:

- Transmit a 4-20mA temperature process variable signal to the DCS controller
- Provide Alarm signals to the DCS with local status indication for
  - High temperature
  - System diagnostic failure
- Provide upscale drive of the output signal upon RTD sensor failure

Figure 7.1. *SPA²IS associated apparatus incorporating IS barrier, temperature transmitter, temperature alarm and diagnostic alarming functions in a single device.*

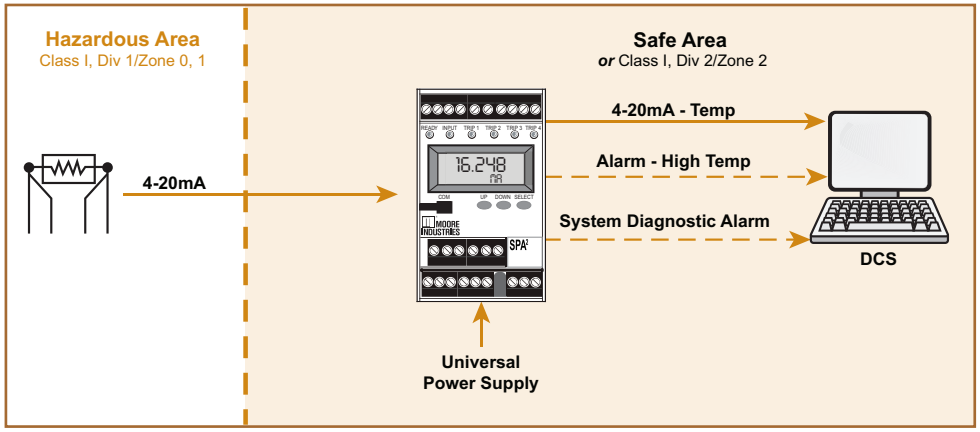

Level Linearization and Control

Application: Provide local on-off control of a pump on a spherical tank based on a high level alarm and a high-high level shutdown contact to the local Emergency Shutdown (ESD) system.

The SPA²IS HLPRG version with –AO option and 4 alarms is located in the control room and connects directly to the level transmitter in the hazardous area. The integral –TX option is used to power the transmitter. The analog output and 2 of the alarm trips are connected to the DCS and the other 2 alarm trips are connected to the pump control and ESD system. The SPA²IS is configured to:

- Use the custom curve function to provide up to 128 point linearization of the spherical tank level
- Relay #1 as a system diagnostic alarm; relay #2 as a band alarm (+/- 10 feet of mid-level); relay #3 as a high level control signal to the pump using a 20% deadband to prevent excessive pump cycling; relay #4 as a Hi-Hi contact to trigger the local Emergency Shutdown (ESD) system

Figure 7.2 *SPA²IS Associated Apparatus incorporating an IS barrier, spherical tank linearization measurement function, local pump control, Hi-Hi ESD, local indication, self-diagnostics, and quad relay outputs for control and alarming.*

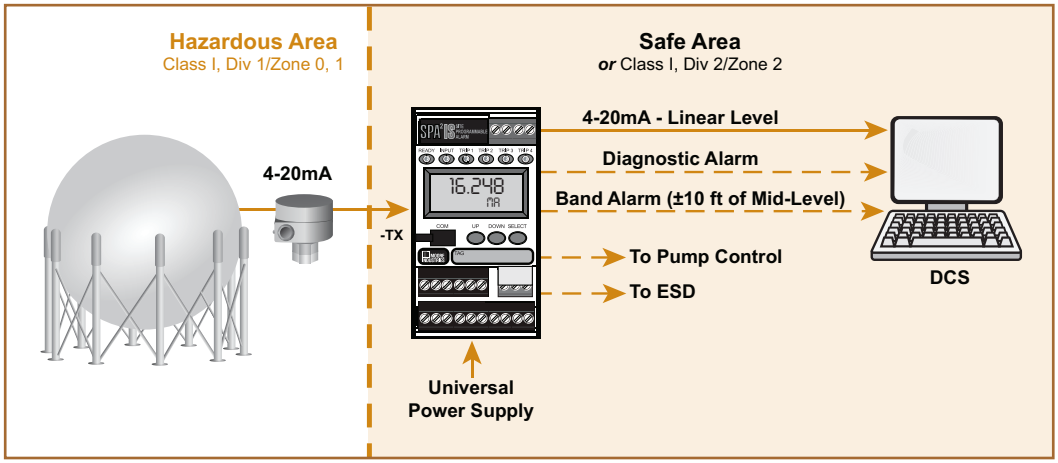

Low Pressure Alarm with spurious trip suppression

Application: A low pressure alarm on an instrument air system in a hazardous area which will not trip if the pressure transmitter fails and the header pressure is still acceptable. The signal also needs to be monitored in the Control Room.

The SPA²IS HLPRG version with –AO option and 2 alarms is located in the control room and connects directly to the pressure transmitter in the hazardous area. The integral –TX option is used to power the transmitter. The analog output is connected to the control room and the 2 alarm trips are connected in series to the shutdown/annunciator. The SPA²IS is configured to:

- Set alarm 1 as normally open (NO) with a low trip point and time delay to close when the header pressure falls below an acceptable level
- Set alarm 2 as normally closed (NC) to open if the pressure transmitter fails so a shutdown will not occur

Figure 7.3 *SPA²IS Associated Apparatus incorporating an IS barrier with transmitter power, signal retransmission and a low trip incorporating input diagnostics.*

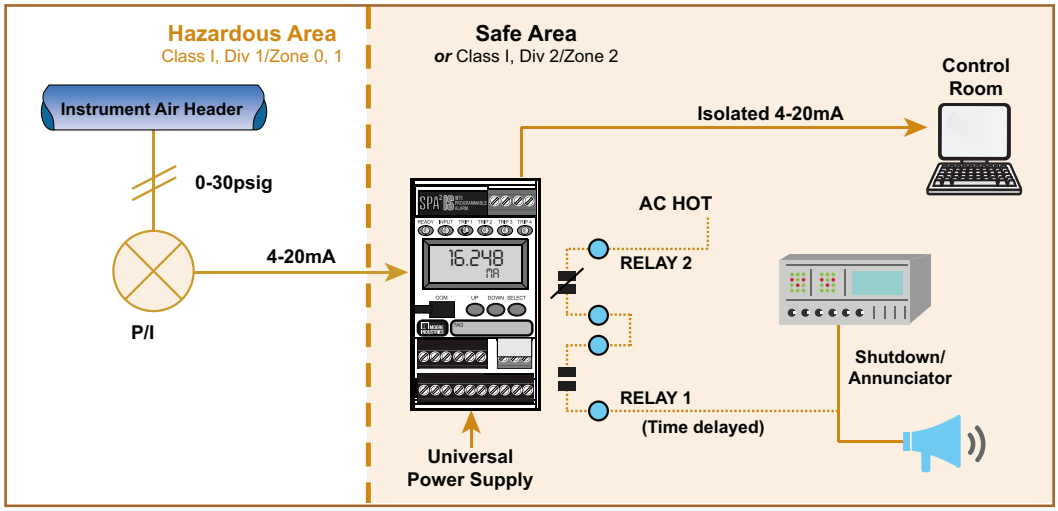

Overpressure Protection system

Application: An overpressure protection system is an effective way to provide a barrier between high pressure and low pressure parts of an installation without the need to release fluid into or otherwise contaminate the environment. An example is in an offshore well platform where the source can occasionally present a harmful pressure surge in the pipeline. The overpressure system is designed to shut off the source before the design pressure of the downstream plant is exceeded, avoiding a rupture of a line or vessel. There is also a requirement to provide an alarm when the pressure transmitter is stuck at a constant output which would warn of a failed transmitter or bad impulse line

The SPA²IS HLPRG version with –AO option and 2 alarms is located in the control room and connects directly to the pressure transmitter in the hazardous area. The integral –TX option is used to power the transmitter. The analog output and one alarm is connected to the DCS and the second alarm is connected to the valve. The SPA²IS is configured to::

- Set alarm 1 to detect a stuck input and send alarm to the DCS.
- Set alarm 2 as high trip to open valve if the pressure is too high

Figure 7.4 *SPA²IS Associated Apparatus incorporating an IS barrier, transmitter power, signal retransmission, stuck input alarm and a high trip.*

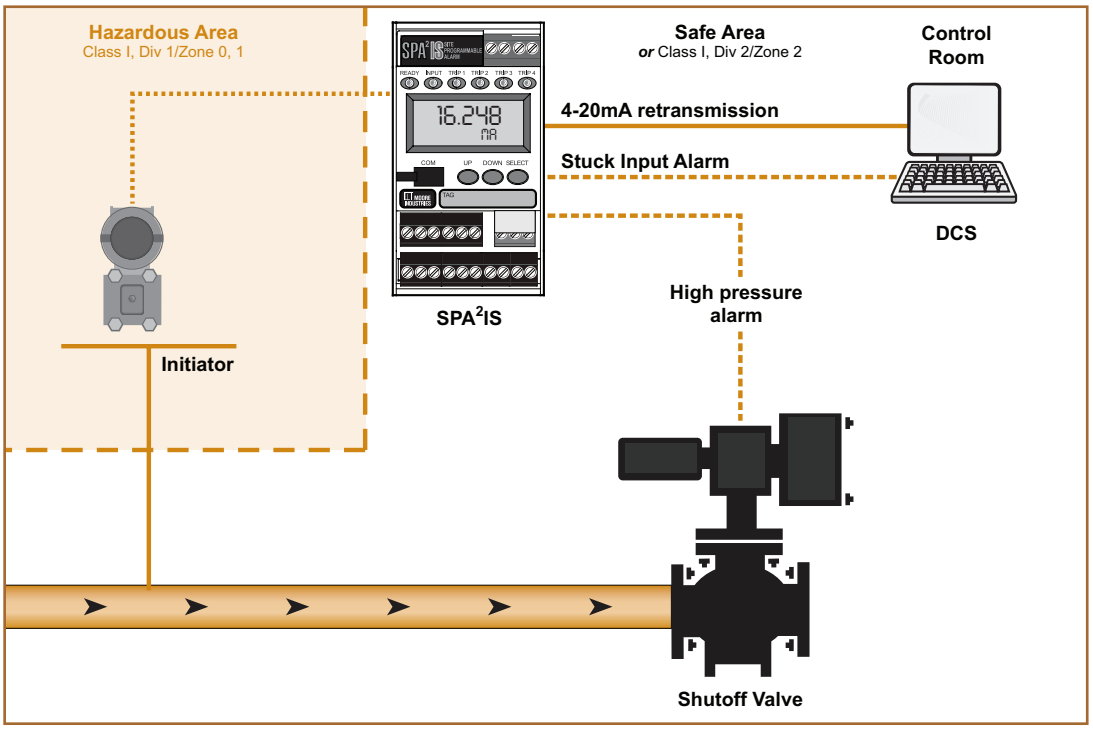

Section 8: Specifications

SPA²IS HLPRG Specifications

Performance

Input Range: Current Input 0-50mA (1mA minimum span); Voltage Input 0-11V (250mV minimum)
Input Accuracy and Alarm Trip Repeatability: Current inputs, ±2 microamps (0.01% of 20mA span); Voltage inputs, ±1mV (0.01% of max. span)
Overall Accuracy: The overall accuracy of the unit is the combined input and output accuracies. It includes the combined effects of linearity, hysteresis, repeatability and adjustment resolution. It does not include ambient temperature effect.
Stability: Refer to Table 1
Dead Band: 11.5V or 50mA, maximum in Linear Mode; equivalent of maximum input range in user-set engineering units in Scaling/Custom Mode
Response Time: 256msec typical (Defined as the time from step change on input to alarm state change when alarm is set to trip at mid-point)
Alarm Trip Delay: Programmable from 0-120 seconds
Power Supply Effect: ±0.002% of span for a 1% change in line voltage (AC or DC)
Isolation: 500Vrms between case, input, output (units with -AO option) and power, continuous.
Dielectric Strength: Will withstand 1560Vrms for 2 seconds between input, output and power; 500Vrms for 2 seconds from case to input, output or power

Performance (continued)

Power Supply: Universal 21.6-125Vdc or 90-260Vac;
Power Consumption: 3.5W typical, 5.5W maximum
Input Impedance: Current inputs, 20ohms; Voltage inputs, 1Mohm
Input Over-Range Protection: Voltage inputs, ±30Vdc; Current inputs, ±100mA
TX Power Supply: Open Circuit Voltage/Short-Circuit Current: 25.2V/42.5mA, Available Voltage: 17V @ 23.6mA
Relay Outputs: Single-pole/double-throw (SPDT), 1 form C, rated 5A@250Vac, 50/60Hz or 24Vdc, non-inductive

Performance with Analog Output (-AO Option)

WITH ANALOG OUTPUT
Output Accuracy: ±0.01% of max. span (±2 microamps)
Response Time: 256msec maximum (128msec typical) for the output to change from 10% to 90% of its scale for an input step change of 0 to 100%
Ripple (up to 120Hz): 10mVp-p when measured across a 250ohm resistor
Output Limiting:

Output	Failure Limits
0-20mA	0, 23.6mA
4-20mA	3.6, 23.6mA
X-20mA (0<X<4)	(90% of X), 23.6mA

Load Capability: Source mode (internal power supply), 0-1000 ohms
Load Effect: ±0.01% of span from 0 to 1000 ohms

Ambient Conditions

Operating Range: -40°C to +85°C (-40°F to +185°F)
Storage Range: -40°C to +85°C (-40°F to +185°F)

Ambient Conditions (continued)

Ambient Temperature Effect: Input: Current, 2 microamps/°C; Voltage, 1mV/°C; Output: ±0.009% of max. span/°C; Ambient Temperature Reference Conditions for Specifications: 25°C
Relative Humidity: 5-95% non-condensing
RFI/EMI Protection: 80% AM at 1Khz 20V/m @ 20-1000Mhz per IEC61000-4-3.
Noise Rejection: Common Mode, 100dB@50/60Hz Normal Mode, Current Input, 70dB typical@50mAp-p@ 50/60Hz; Voltage Input, 70dB typical@1Vp-p@ 50/60Hz

Adjustments

Front panel pushbuttons parameter configurations; Internal jumper and menu password protect parameter settings

Indicators

LCD: 2x5 14-segment characters, backlit, alphanumeric readout accurate to the nearest digit.
Range: -99999 to 99999; Decimal point can be user-set
LED Type: INPUT LED: Dual color LED indicates input failure
READY LED: Green LED indicates unit is operating properly
ALARM 1, 2, 3 and 4 LED: Dual color LED per relay indicates alarm status
Display Accuracy: ±1 digit; when scaling the display (or in Custom Mode), high input-to-display span ratios decrease display accuracy

Weight

544 g to 618 g (19.2 oz to 21.8 oz)

Specifications and information subject to change without notice.

Table 1. *Long-Term Stability*

Stability (% of maximum span)	Input-to-Output (Years)			Input-to-Relay (Years)		
	1	3	5	1	3	5
Current Inputs	0.081	0.14	0.18	0.047	0.81	0.105
Voltage Inputs	0.093	0.16	0.21	0.066	0.114	0.147

SPA²IS TPRG Specifications

Performance

Input Accuracy and Alarm Trip Repeatability: Refer to Table 4
Overall Accuracy: The overall accuracy of the unit is the combined input and output accuracies. It includes the combined effects of linearity, hysteresis, repeatability and adjustment resolution. It does not include ambient temperature effect. For T/C input, add the RJC error.
Reference Junction Compensation Accuracy (T/C inputs only): ±0.45°C
Stability: Refer to Table 1
Dead Band: User-set within selected input range; fully scalable and set in user-selected engineering units
Input to Output Response Time: 256msec typical (Defined as the time from step change on input to alarm state change when alarm is set to trip mid-point)
Alarm Trip Delay: Programmable from 0-120 seconds
Power Supply Effect: ±0.002% of span for a 1% change in line voltage (AC or DC)
Isolation: 500Vrms between case, input, output (units with -AO option) and power, continuous.

Dielectric Strength: Will withstand 1560Vrms for 2 seconds between input, output and power; 500Vrms for 2 seconds from case to input, output or power.

Power Supply: Universal 21.6-125Vdc or 90-260Vac

Performance with Analog Output (-AO Option)

Power Consumption: 3W typical, 3.5W maximum
Input Impedance: T/C inputs, 40Mohms, nominal
Input Over-Range Protection: ±5Vdc
Excitation Current: (RTD and Ohms) 250 microamps, ±10%
Relay Outputs: Single-pole/double-throw (SPDT), 1 form C, rated 5A@250Vac, 50/60Hz or 24Vdc, non-inductive

WITH ANALOG OUTPUT

Output Accuracy: ±0.01% of max. span (±2 microamps)
Response Time: 256msec maximum (128msec typical) for the output to change from 10% to 90% of its scale for an input step change of 0 to 100%
Ripple (up to 120Hz): 10mVp-p when measured across a 250ohm resistor;
Output Limiting:

Output	Failure Limits
0-20mA	0, 23.6mA
4-20mA	3.6, 23.6mA
X-20mA (0<X<4)	(90% of X), 23.6mA

Load Capability: Source mode (internal power supply), 0-1000 ohms
Load Effect: ±0.01% of span from 0 to 1000 ohms

Ambient Conditions

Operating Range: -40°C to +85°C (-40°F to +185°F)
Storage Range: -40°C to +85°C (-40°F to +185°F)
Ambient Temperature Effect: Input, refer to Table 3; Output, ±0.009% of max. span/°C; Ambient Temperature Reference Conditions for Specifications: 25°C

Ambient Conditions (continued)

Effect of Ambient Temperature on Reference Junction Compensation (T/C inputs only): ±0.005°C per °C change of ambient temperature
Relative Humidity: 5-95% non-condensing
RFI/EMI Protection: 80% AM at 1Khz 20V/m @ 20-1000Mhz per IEC61000-4-3

Noise Rejection: Common Mode, 100dB@50/60Hz Normal Mode, refer to Table 2

Adjustments

Front panel pushbuttons parameter configurations; Internal jumper and menu password protect parameter settings

Indicators

LCD: 2x5 14-segment characters, backlit, alphanumeric readout accurate to the nearest digit.
Range: -99999 to 99999; Decimal point can be user-set
LED Type: INPUT LED: Dual color LED indicates input failure
READY LED: Green LED indicates unit is operating properly
ALARM 1, 2, 3 and 4 LED: Dual color LED per relay indicates alarm status
Display Accuracy: ±1 digit; when scaling the display (or in custom mode), high input-to-display span ratios decrease display accuracy

Weight

544 g to 601 g (19.2 oz to 21.2 oz)

Specifications and information subject to change without notice.

Table 1. *Long-Term Stability*

Stability (% of maximum span)	Input-to-Output (Years)			Input-to-Relay (Years)		
	1	3	5	1	3	5
RTD, Ohm, & Pot Inputs	0.09	0.16	0.21	0.047	0.081	0.104
T/C & mV Inputs	0.08	0.14	0.18	0.008	0.014	0.019

Table 2. *Normal Mode Rejection Ratio*

Sensor Type		Max. p-p Voltage Injection for 100dB at 50/60Hz
T/C: J, K, N, C, E		150mV
T/C: T, R, S, B		80mV
Pt RTD: 100, 200, 300ohms		250mV
Pt RTD: 400, 500, 1000ohms		1V
Ni: 120ohms		500mV
Cu: 9.03ohms		100mV
Resistance	**mV**	
1-4kohms	250-1000	1V
0.25-1kohms	62.5-250	250mV
0.125-0.25kohms	31.25-62.5	100mV

Table 3. *Ambient Temperature Effect*

	Accuracy per 1°C (1.8°F) change in Ambient
*RTD	0.0035°C
Millivolt	0.5microvolts + 0.005% of reading
Ohm	0.002ohms + 0.005% of reading
Thermocouple	
	Accuracy per 1°C (1.8°F) change in Ambient
J	0.00016°C + 0.005% of reading
K	0.0002°C + 0.005% of reading
E	0.00026°C + 0.005% of reading
T	0.0001°C + 0.005% of reading
R, S	0.00075°C + 0.005% of reading
B	0.0038°C + 0.005% of reading
N	0.0003°C + 0.005% of reading
C	0.00043°C + 0.005% of reading
mV	0.5microvolts + 0.005% of reading

*Accuracy of Ni672 is 0.002°C

Making temperature measurements at the extreme upper limit of the thermocouple is difficult at best. When you exceed the upper limit, if the transmitter clamps, you are basically blind. Moore Industries allows you to configure the upper range of the transmitter slightly higher than the thermocouple limit. It is simply a linear extrapolation. We do not attest to the accuracy of the measurement above the thermocouple limit, however, having a measurement rather than being blind may be beneficial in some applications.

Table 4. *Accuracy with RTD, Thermocouple, Ohms, Potentiometer, Millivolt Inputs and Four Terminal Dual/Triple Ranges*

Input	Type	α	Ohms	Conformance Range	Minimum Span	Input Accuracy/ Repeatability	Maximum Range
RTD (2-, 3-, 4-Wire) **Dual** (2-Wire, One 2-Wire and One 3-Wire)	**Platinum**	0.003850	100	-200 to 850°C (-328 to 1562°F)	10°C (18°F)	±0.1°C (±0.18°F)	-240 to 960°C (-400 to 1760°F)
			200				
			300				
			400				
			500				
			1000				
			Dual 500				
			Dual 1000				
		0.003902	100	-100 to 650°C (-148 to 1202°F)			-150 to 720°C (-238 to 1328°F)
			200				
			400				
			500				
			1000				
			Dual 500				
			Dual 1000				
		0.003916	100	-200 to 510°C (-328 to 950°F)			-240 to 580°C (-400 to 1076°F)
	Nickel	0.00672	120	-80 to 320°C (-112 to 608°F)			-100 to 360°C (-148 to 680°F)
	Copper	0.00427	9.035	-50 to 250°C (-58 to 482°F)		±0.85°C (±1.53°F)	-65 to 280°C (-85 to 536°F)
Ohms	**Direct Resistance**	n/a	0-4000	0-4000ohms	10ohms	±0.4ohms	0-4095ohms
			Dual 0-4000				
	Potentiometer		4000 max.	0-100%	10%	±0.1%	0-100%
T/C	**J**	n/a	n/a	-180 to 760°C (-292 to 1400°F)	35°C (63°F)	±0.25°C (±0.45°F)	-210 to 760°C (-346 to 1400°F)
	K	n/a	n/a	-150 to 1370°C (-238 to 2498°F)	40°C (72°F)	±0.3°C (±0.54°F)	-270 to 1372°C (-454 to 2501°F)
	E	n/a	n/a	-170 to 1000°C (-274 to 1832°F)	35°C (63°F)	±0.2°C (±0.36°F)	-270 to 1000°C (-454 to 1832°F)
	T	n/a	n/a	-170 to 400°C (-274 to 752°F)	35°C (63°F)	±0.25°C (±0.45°F)	-270 to 400°C (-454 to 752°F)
	R	n/a	n/a	0 to 1760°C (32 to 3200°F)	50°C (90°F)	±0.55°C (±0.99°F)	-50 to 1768°C (-58 to 3214°F)
	S	n/a	n/a	0 to 1760°C (32 to 3200°F)	50°C (90°F)	±0.55°C (±0.99°F)	-50 to 1768°C (-58 to 3214°F)
	B	n/a	n/a	400 to 1820°C (752 to 3308°F)	75°C (135°F)	±0.75°C (±1.35°F)	0 to 1820°C (32 to 3308°F)
	N	n/a	n/a	-130 to 1300°C (-202 to 2372°F)	45°C (81°F)	±0.4°C (±0.72°F)	-270 to 1300°C (-454 to 2372°F)
	C	n/a	n/a	0 to 2300°C (32 to 4172°F)	100°C (180°F)	±0.8°C (±1.44°F)	0 to 2315°C (32 to 4200°F)
mV	**DC**	n/a	n/a	n/a	4mV	±30microvolts	-50 to 1000mV

Section 9: Ordering Information

Ordering Information

Unit	Input	Output	Power	Options	Housing
SPA2IS Programmable Limit Alarm Trip with Associated IS Inputs for Current/Voltage, RTDs and Thermocouples	**HLPRG** Programs to accept: Current: Any range between 0-50mA including: 0-20mA 4-20mA 10-50mA Voltage: Any range between 0-10Vdc including: 0-5Vdc 1-5Vdc 0-10Vdc **TPRG** Programs to accept (see Table 2 for details): RTD: 2-, 3- and 4-wire; platinum, copper, and nickel Thermocouple: J, K, E, T, R, S, B, N, C Ohms: 0-4000ohms (Potentiometer, 4000ohms maximum) Millivolts: –50 to +1000mV	**2PRG** Dual Relays (Relays are single-pole/double-throw (SPDT, 1 form C, rated 5A@250Vac, 50/60Hz or 24Vdc, non-inductive) **4PRG** Quad Relays (Relays are single-pole/double-throw (SPDT), 1 form C, rated 5A@250Vac, 50/60Hz or 24Vdc, non-inductive) Each relay individually configures for: High or Low Trip Normally Open or Normally Closed Failsafe or Non-Failsafe	**U** Universal accepts any power input range of 21.6-125Vdc or 90-260Vac	**-AO** Analog output (isolated and linearized) scaleable for any range between 0-20mA into 1000 ohms (see "Specifications" for additional information) **-FMEDA** Unit comes with Failure Modes, Effects and Diagnostic Analysis (FMEDA) data for evaluating the instrument for suitability of use in a safety-related application	**DIN** DIN-style housing mounts on 35mm (EN50022) Top Hat DIN-rails **FLB** Flange mount bracket for wall mounting

When ordering, specify: Unit / Input / Output / Power / Options [Housing]
Model number example: SPA²IS / TPRG / 2PRG / U / - AO [DIN]

MOORE INDUSTRIES

DO NOT SCALE DRAWING

TOLERANCES (UNLESS NOTED)
DECIMALS =±Inch /mm
.X =±.1 /2.54
.XX =±.01 /0.25
.XXX =±.005/0.125
HOLES =±.003/0.080
ANGLES =±1/2°

DRAWN	C. Whan	8/15
CHECKED	V. Garcia	8/15
ENGINEER	J. Decastro	8/15
SCALE	NONE	

CATEGORY: CONTROL DRAWING

TITLE: **Installation Diagram: SPA2IS [DIN] Associated Intrinsically Safe**

DRAWING NUMBER	SHEET	REVISION
100-100-82	1 of 2	A

REVISED BY	DATE	BY	APPROVAL
ECO 17656	9/15	CW	CB

NOTICE RE PROPRIETARY INFORMATION: This drawing and the information contained herein are the proprietary property of Moore Industries International, Inc. (MII) and should not be reproduced or disclosed to any third party without the written consent of an authorized officer of MII.

Hazardous Area
Explosive Atmosphere
Class I, Division 1 / Zone 0

Non-Hazardous / Un-Classified
-OR-
Hazardous Area / Explosive Atmosphere
Class I, Division 2 / Zone 2

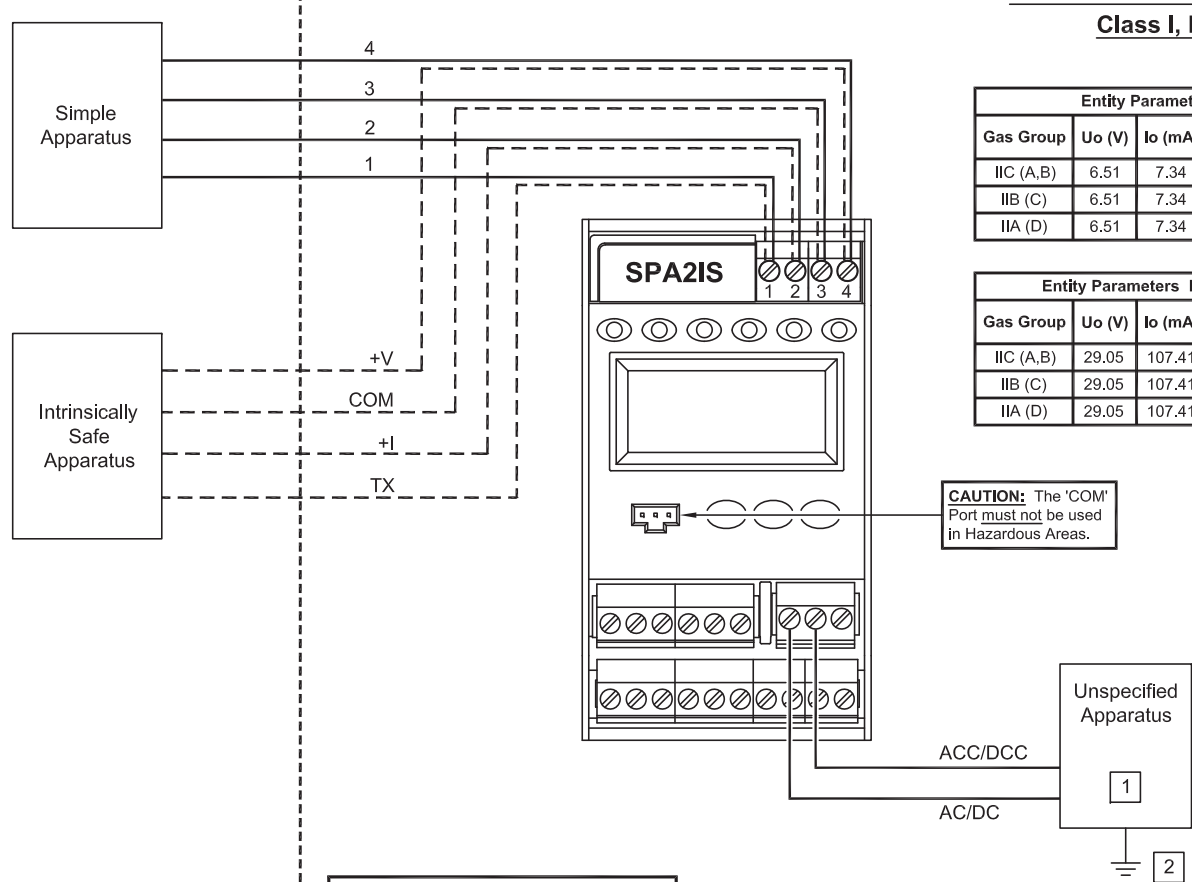

CAUTION: The 'COM' Port must not be used in Hazardous Areas.

Entity Parameters TPRG (Terminals 1, 2, 3, 4)						
Gas Group	Uo (V)	Io (mA)	Po (mW)	Co (µF)	Lo (mH)	Lo/Ro (mH/Ohm)
IIC (A,B)	6.51	7.34	11.94	21.94	660.88	2.98
IIB (C)	6.51	7.34	11.94	499.94	1982.63	11.92
IIA (D)	6.51	7.34	11.94	999.94	5947.88	23.83

Entity Parameters HLPRG (Terminals TX, +I, COM, +V)						
Gas Group	Uo (V)	Io (mA)	Po (mW)	Co (µF)	Lo (mH)	Lo/Ro (mH/Ohm)
IIC (A,B)	29.05	107.41	727.83	0.01	3.09	0.05
IIB (C)	29.05	107.41	727.83	0.54	9.25	0.20
IIA (D)	29.05	107.41	727.83	1.89	27.74	0.40

-- NOTE --
SEE SHEET 2 FOR INSTALLATION NOTES

Certified Product
This is a controlled 'Related' or 'Schedule' drawing. No modifications are permitted without the notification and final approval of the Certification Engineer (related dwgs.) or the Certifying Agency (schedule dwgs.)

MOORE INDUSTRIES	DO NOT SCALE DRAWING			CATEGORY CONTROL DRAWING	DRAWING NUMBER 100-100-82 SHEET 2 of 2			REVISION A
	TOLERANCES (UNLESS NOTED)	DRAWN C. Whan	8/14	TITLE **Installation Diagram: SPA2IS [DIN] Associated Intrinsically Safe**	REVISED BY SEE SHEET 1	DATE	BY	APPROVAL
	DECIMALS =±Inch /mm .X =±.1 /2.54 .XX =±.01 /0.25 .XXX =±.005/0.125 HOLES =±.003/0.080 ANGLES =±1/2°	CHECKED See Sht. 1			NOTICE RE PROPRIETARY INFORMATION: This drawing and the information contained herein are the proprietary property of Moore Industries International, Inc. (MII) and should not be reproduced or disclosed to any third party without the written consent of an authorized officer of MII.			
		ENGINEER See Sht. 1						
		SCALE NONE						

Installation Notes:

1. The control room equipment (unspecified apparatus) connected to the Associated Apparatus must not generate more than 250 Vrms or Vdc, or the marked Um on the associated apparatus, whichever is less.
2. Installations in the U.S. shall be in accordance with ANSI/ISA RP12.06.01 “Installation of Intrinsically Safe Systems for Hazardous (Classified) Locations” and the latest edition of the National Electrical Code (ANSI/NFPA 70). Resistance between Intrinsically Safe Ground and earth ground must be less than 1.0 Ohm.
3. Installation in Canada shall be in accordance with the latest edition of the C22.1 Canadian Electrical Code, Part I.
4. Installation in Europe shall be in accordance with the latest editions of the wiring practices for the country of origin and EN 60079-14.
5. Installation for IECEx certification shall be in accordance with the latest editions of the wiring practices for the country of origin.
6. All field wiring shall be rated +90°C.
7. No revision is allowed to this drawing without prior FM Approval.
8. The Entity Concept allows interconnection of associated apparatus and intrinsically safe apparatus when the following is true: Uo ≤ Ui , Io ≤ Ii , Po ≤ Pi , Co ≥ Ci + Ccable; Lo ≥ Li + Lcable.
9. The 'COM' port MUST NOT be used in the Hazardous Area.

-- WARNING --
Substitution of components may impair Intrinsic Safety. To prevent ignition of flammable or combustible atmospheres, disconnect power before servicing.

Where English is not a language of the Country in which the equipment is being used, please apply to Moore Industries International, Inc. (MII) for a suitable translation.

Installation may only be carried out by suitably trained personnel and in accordance with national wiring regulations or codes of practice.

Certified Product
This is a controlled 'Related' or 'Schedule' drawing. No modifications are permitted without the notification and final approval of the Certification Engineer (related dwgs.) or the Certifying Agency (schedule dwgs.)

MOORE INDUSTRIES

DO NOT SCALE DRAWING

TOLERANCES (UNLESS NOTED)			
DECIMALS	=±inch /mm		
.X	=±.1 /2.54		
.XX	=±.01 /0.25		
.XXX	=±.005/0.125		
HOLES	=±.003/0.080		
ANGLES	=±1/2°		

DRAWN	C. Whan	8/15
CHECKED	V. Garcia	8/15
ENGINEER	J. Decastro	8/15
SCALE	1/1	

CATEGORY: COMPUTERIZED LABEL

TITLE: **ID LABEL, Model/Serial SPA2IS [DIN] Site Programmable Alarm with I.S. Outputs**

DRAWING NUMBER	REVISION
200-251-2503	A3

REVISED BY	DATE	BY	APPROVAL
ECO 18883	11/20	TG	JD

NOTICE RE PROPRIETARY INFORMATION: This drawing and the information contained herein are the proprietary property of Moore Industries International, Inc. (MII) and should not be reproduced or disclosed to any third party without the written consent of an authorized officer of MII.

Certified Product

This is a controlled 'Related' or 'Schedule' drawing. No modifications are permitted without the notification and final approval of the Certification Engineer (related dwgs.) or the Certifying Agency (schedule dwgs.)

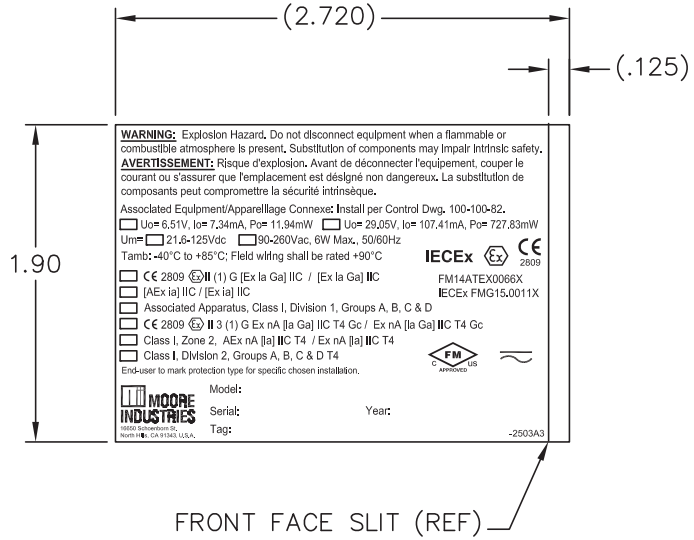

Notes:

1. TO PRINT THIS LABEL: JOB SPECIFIC MODEL, SERIAL, AND TAG NUMBERS WILL BE DOWNLOADED FROM THE MENTOR DATA FILE AND PRINTED ALONG WITH THE FIXED TEXT AND GRAPHICS (SUPPLIED BY THE LEGI 93 DATA FILE) TO CREATE THE FINISHED LABEL.
2. THE FIXED TEXT AND GRAPHIC FIELDS FOR THIS LABEL ARE STORED UNDER NO. 200–251–2503 IN THE LEGI 93 LABEL MACHINE COMPUTER HARD DISK.
3. MATERIAL: .002 SILVER, IDENTIPLATE (MII P/N 200–305–00) CUT TO SIZE AS SHOWN. REFER TO LABEL SPEC. DRAWING 200–305–00.
4. **ALL MATERIAL MUST BE ROHS COMPLIANT.**

Warranty Disclaimer

Moore Industries ("The Company") makes no express, implied or statutory warranties (including any warranty of merchantability or of fitness for a particular purpose) with respect to any goods or services sold by the company. The company disclaims all warranties arising from any course of dealing or trade usage, and any buyer of goods or services from the company acknowledges that there are no warranties implied by custom or usage in the trade of the buyer and of the company, and that any prior dealings of the buyer with the company do not imply that the company warrants the goods or services in any way.

Any buyer of goods or services from the company agrees with the company that the sole and exclusive remedies for breach of any warranty concerning the goods or services shall be for the company, at its option, to repair or replace the goods or services or refund the purchase price. The company shall in no event be liable for any consequential or incidental damages even if the company fails in any attempt to remedy defects in the goods or services , but in such case the buyer shall be entitled to no more than a refund of all monies paid to the company by the buyer for purchase of the goods or services.

Any cause of action for breach of any warranty by the company shall be barred unless the company receives from the buyer a written notice of the alleged defect or breach within ten days from the earliest date on which the buyer could reasonably have discovered the alleged defect or breach, and no action for the breach of any warranty shall be commenced by the buyer any later than twelve months from the earliest date on which the buyer could reasonably have discovered the alleged defect or breach.

Return Policy

For a period of thirty-six (36) months from the date of shipment, and under normal conditions of use and service, Moore Industries ("The Company") will at its option replace, repair or refund the purchase price for any of its manufactured products found, upon return to the Company (transportation charges prepaid and otherwise in accordance with the return procedures established by The Company), to be defective in material or workmanship. This policy extends to the original Buyer only and not to Buyer's customers or the users of Buyer's products, unless Buyer is an engineering contractor in which case the policy shall extend to Buyer's immediate customer only. This policy shall not apply if the product has been subject to alteration, misuse, accident, neglect or improper application, installation, or operation. THE COMPANY SHALL IN NO EVENT BE LIABLE FOR ANY INCIDENTAL OR CONSEQUENTIAL DAMAGES.

To return equipment to Moore Industries for repair, follow these four steps:

1. Call Moore Industries and request a Returned Material Authorization (RMA) number.

   Warranty Repair –
   If you are unsure if your unit is still under warranty, we can use the unit's serial number to verify the warranty status for you over the phone. Be sure to include the RMA number on all documentation.

   Non-Warranty Repair –
   If your unit is out of warranty, be prepared to give us a Purchase Order number when you call. In most cases, we will be able to quote you the repair costs at that time. The repair price you are quoted will be a "Not To Exceed" price, which means that the actual repair costs may be less than the quote. Be sure to include the RMA number on all documentation.

2. Provide us with the following documentation:

   a) A note listing the symptoms that indicate the unit needs repair

   b) Complete shipping information for return of the equipment after repair

   c) The name and phone number of the person to contact if questions arise at the factory

3. Use sufficient packing material and carefully pack the equipment in a sturdy shipping container.

4. Ship the equipment to the Moore Industries location nearest you.

The returned equipment will be inspected and tested at the factory. A Moore Industries representative will contact the person designated on your documentation if more information is needed. The repaired equipment, or its replacement, will be returned to you in accordance with the shipping instructions furnished in your documentation.

MOORE INDUSTRIES

United States • info@miinet.com
Tel: (818) 894-7111 • FAX: (818) 891-2816
Australia • sales@mooreind.com.au
Tel: (02)8536-7200 • FAX: (02) 9525-7296

Demand Moore Reliability
www.miinet.com
BeNeLux • info@mooreind.eu
Tel: 03/448.10.18 • FAX: 03/440.17.97

China • sales@mooreind.sh.cn
Tel: 86-21-62491499 • FAX: 86-21-62490635
United Kingdom • sales@mooreind.com
Tel: 01293 514488 • FAX: 01293 387752

© 2025 Moore Industries-International, Inc.

Specifications and Information subject to change without notice.