Brüel & Kjær Vibro

A member of the NSK Group

Velocity sensors

Quality products from a single source

For more than 50 years, Brüel & Kjær Vibro has been a leading manufacturer of vibration measuring instruments and machine condition monitoring systems.

Brüel & Kjær Vibro provide world-wide services as well as rapid and customized system solutions.

For measuring and monitoring mechanical vibration in rotating machines, the technically correct acquisition of measurements is essential.

The appropriate sensor for your measurement task

With the extensive product range of Brüel & Kjær Vibro sensors, you will find the most suitable solution for your application.

Velocity sensors for the measurement of

- **absolute casing vibration**
- **absolute bearing vibration**

Displacement sensors and inductive displacement sensors for the measurement of

- relative shaft vibration
- relative shaft position
- absolute and relative expansion
- speed and phase position
- eccentricity

All brochures are available in PDF-file format from:
www.bkvibro.com

Brüel & Kjær Vibro reserves the right to change specifications and accessories without prior notification.

Velocity sensors

Range of applications

The velocity sensors of Brüel & Kjær Vibro measure mechanical vibrations in the **frequency range 1 Hz to 2,000 Hz.** Their high level of reliability has been proven by long-term installations in industry.

Velocity sensors are used for the measurement of the
• absolute casing vibrations
• absolute bearing vibrations
in machines.

Coordinated solutions

The resonant frequencies of the velocity sensors are at 8 Hz or 15 Hz depending upon their different constructional features. Through electronic linearization of the respective frequency range it is possible to also measure vibrations that lie well below these resonant frequencies with high accuracy. The measuring and monitoring instruments of Brüel & Kjær Vibro operate with linearization circuits which are exactly tuned to the characteristics of our velocity sensors.

The essential benefits

- Selection of the adequate velocity sensor for the application from a variety of different constructional types for
  - high temperatures
  - explosive and hazardous areas and
  - underwater applications
- High suitability for industrial use thanks to the stainless-steel casing:
  - oil, water and dust-tight
  - low sensitivity to disturbing factors
  - suitable for use in a chemically aggressive environment and
  - low sensitivity to external magnetic fields through special construction
- Simple mounting due to
  - central threaded bore as well as the technically suitable installation accessories, cable and protective conduit
- Easy connection to the measuring instruments because
  - the active velocity sensor does not require a power supply and
  - delivers a high output voltage at a low internal resistance.

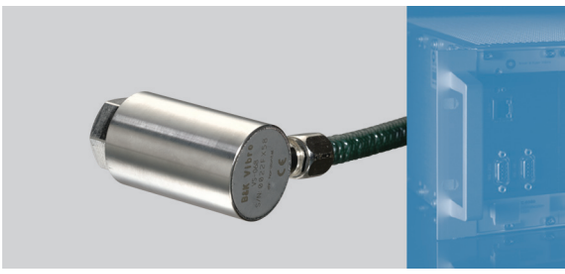

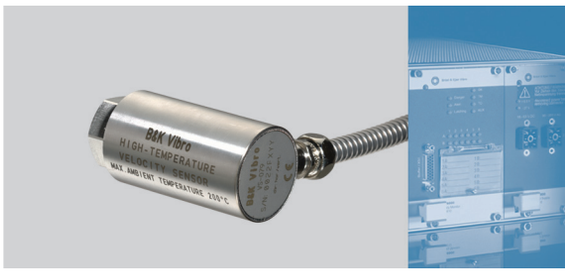

Technical data of the velocity sensor

Measurement direction	horizontal			vertical			horizontal & vertical				
Operating conditions	**Order code**										
Standard for permanent installations	**VS-068**			**VS-069**			**VS-077**				
Extended temperature range								**VS-079**			
Ex-areas [1]		**VS-0168**			**VS-0169**				**VS-0177**		
Underwater (to a depth of 50 m)			**VS-288**			**VS-289**				**VS-277**	
For portable use											**VS-080**

[1] marking Ⓔx II 2 G Ex d IIC T6 Gb Ⓔx II 2 D Ex tb IIC T=85 °C Db IP66

Measurement and electrical properties

Measurement principle	electro-dynamic sensor	electro-dynamic sensor
Op. frequency range with linearization	10 Hz ... 2000 Hz 1 Hz ... 2000 Hz	20 Hz ... 2000 Hz 1 Hz ... 2000 Hz
Transmission factor f = 80 Hz, R_L = 1 MΩ	100 mV/mm/s	75 mV/mm/s (VS-079: 70 mV/mm/s)
Transverse sensitivity	< 7 %	< 5 %
Resonant frequency f_0	8 Hz +/- 10 %	15 Hz +/-2.5 %
Max. permissible vibration displacement	± 0.45 mm	+/- 1 mm
Output impedance	4 kΩ	3.1 kΩ

Operating temperature range

-40 °C ... +80 °C	•			•			•				•
-40 °C ... +200 °C								•			
-10 °C ... +70 °C		•			•				•		
-20 °C ... +50 °C			•			•				•	

Protection class

IP 65		•			•				•		
IP 66	•	•		•	•		•	•	•		
IP 68 (5 bar)			•			•				•	
IP 44											•

Weight (without cable)

approx. 500 g	•	•	•	•	•	•	•	•	•	•	
approx. 300 g											•

Measurement direction	horizontal			vertical			horizontal & vertical				
Operating conditions	**Order code**										
Standard for permanent installations	**VS-068**			**VS-069**			**VS-077**				
Extended temperature range								**VS-079**			
Ex-areas [1]		**VS-0168**			**VS-0169**				**VS-0177**		
Underwater (to a depth of 50 m)			**VS-288**			**VS-289**				**VS-277**	
For portable use											**VS-080**

[1] marking Ⓔx II 2 G Ex d IIC T6 Gb Ⓔx II 2 D Ex tb IIC T=85 °C Db IP66

Electrical connection

Integrated cable with open ends	•	•	•	•	•	•	•	•	•	•	
BNC plug (inverse polarity)											•

Cable design

2-core, PTFE, length 5 m [2]	•			•			•	•			
3-core, PVC, length 10 m		•			•				•		
2-core, PUR, length 50 m			•			•				•	
With steel protective conduit	•			•			•	•			
Without steel protective conduit		•	•		•	•			•		
Cable must be ordered separately											•[3]

[2] cable length of 10 m on demand

[3] e.g. cable length 5 m AC-435 (BNC to Tuchel plug) or AC-183/05 (BNC to BNC)

Sensor mounting

Central thread M 10	•	•[4]		•	•		•	•	•		
Central thread M 8			•			•				•	•[5]

[4] can also be supplied as VS-0188 with central thread M 8

[5] typically by means of a magnetic head, (AC-172, AC-273) or probe (AC-171, AC-172)

Velocity sensors

Types and dimensions

VS-068
VS-069
VS-077
VS-079

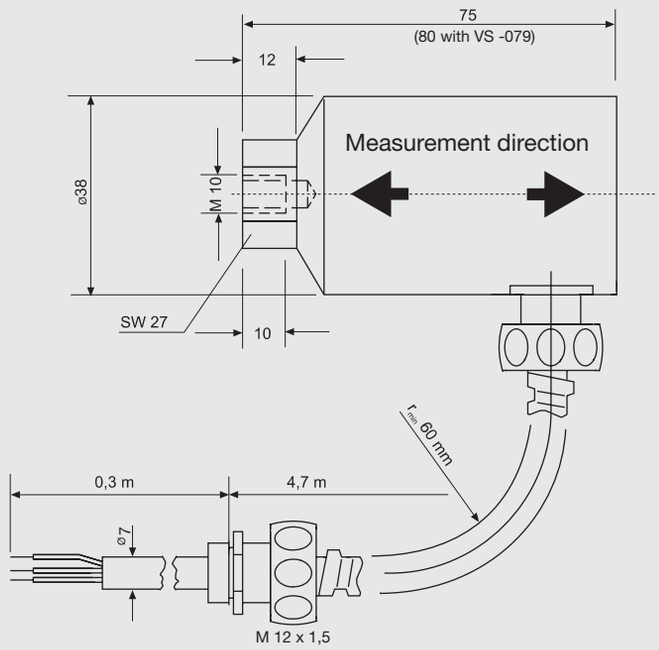

VS-0168
VS-0169
VS-0177

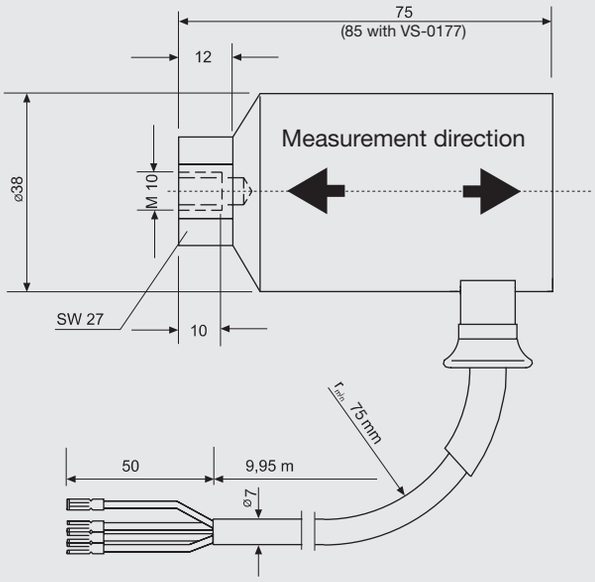

Velocity sensors for permanent installation

Sensor type/order code	VS-068	VS-069	VS-077	VS-079
Measurement direction	horizontal	vertical	horizontal & vertical	horizontal & vertical
Cable length	5 m with protective conduit			
Operating temperature range	-40 °C ... +80 °C			High temperature -40 °C ... +200 °C

Velocity sensors for use in Ex-areas

Sensor type/order code	VS-0168	VS-0169	VS-0177
Measurement direction	horizontal	vertical	horizontal & vertical
Cable length	10 m without protective conduit		
Operating temperature range	-10 °C ... +70 °C		
Marking	Ex II 2 G Ex d IIC T6 Gb	Ex II 2 D Ex tb IIC T=85 °C Db IP66	

Velocity sensors

Types and dimensions

VS-277
VS-288
VS-289

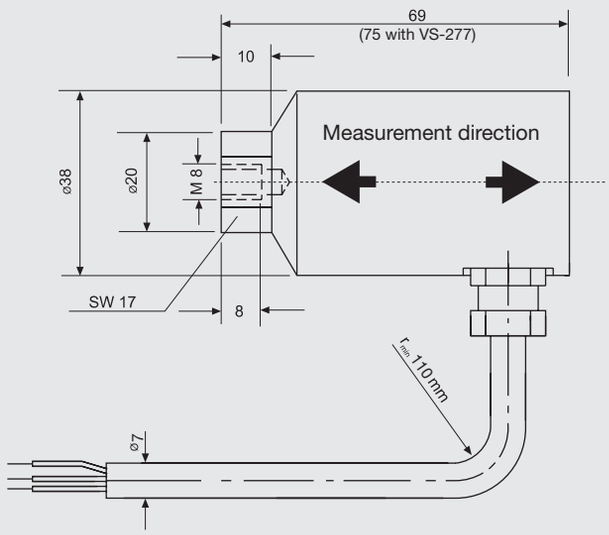

VS-080

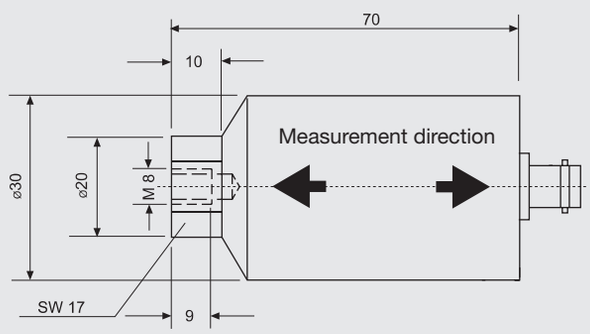

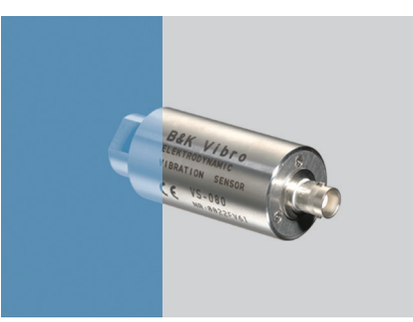

Velocity sensors for underwater use

Sensor type/order code	VS-277	VS-288	VS-289
Measurement direction	horizontal & vertical	horizontal	vertical
Operating temperature range	-20 °C ... +50 °C		
Application	Underwater to a depth of 50 m		

Velocity sensor for portable use

Sensor type/order code	VS-080
Measurement direction	horizontal & vertical
Operating temperature range	-40 °C ... +80 °C
Electrical connection	BNC plug (inverse polarity)

Installation examples

Standard application

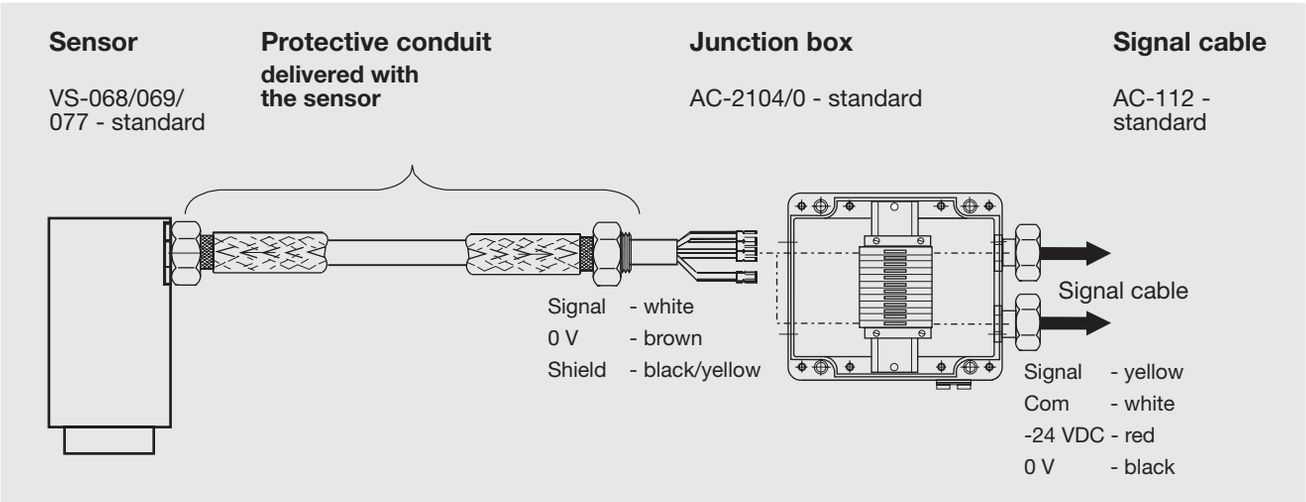

Exe installation

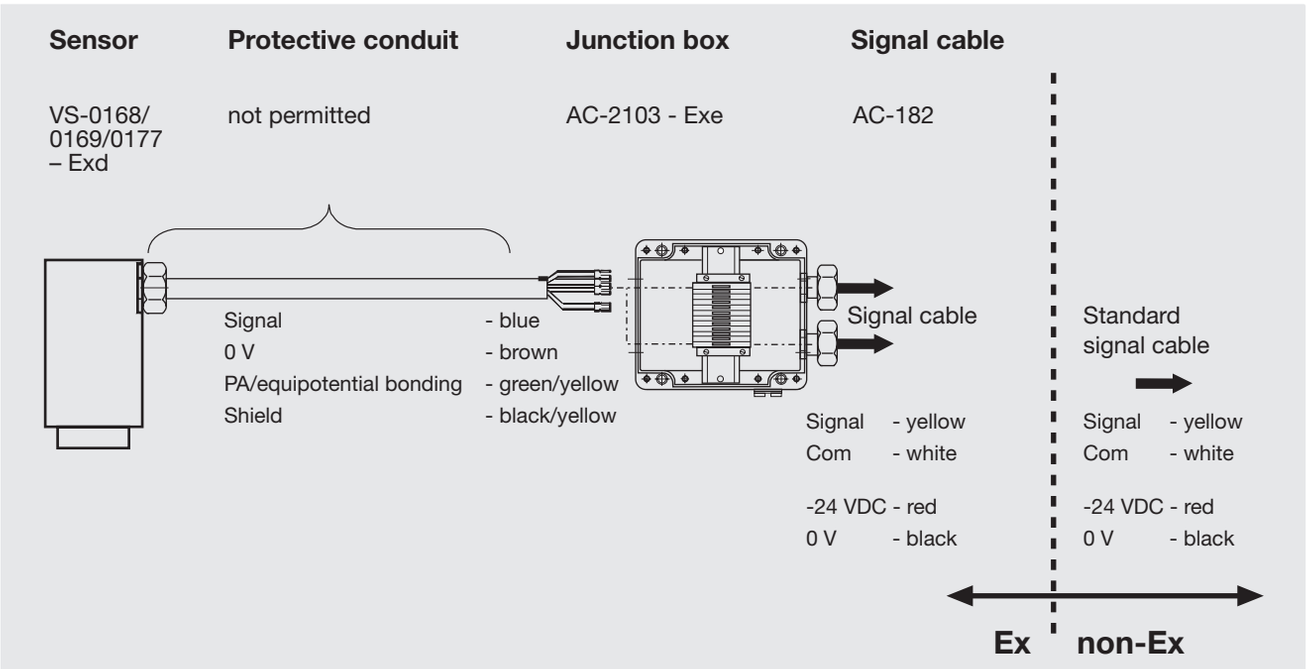

Brüel & Kjær Vibro Sensors

For more information, please refer to **www.bkvibro.com/en/products/sensors**

10. (Status) May 2024 ~ o All data are non-binding. The right to make changes is reserved. • Design: LowinskyART • BBR 0021-EN-12

Brüel & Kjær Vibro GmbH
Wittichstraße 6
64295 Darmstadt
Germany

Phone: +49 6151 428 0
Fax: +49 6151 428 1000

info@bkvibro.com

Brüel & Kjær Vibro A/S
Lyngby Hovedgade 94, 5 sal
2800 Lyngby
Denmark

Phone: +45 69 89 0300
Fax: +45 69 89 0301

www.bkvibro.com

BK Vibro America Inc.
1100 Mark Circle
Gardnerville, NV 89410
USA

Phone: +1 775 552 3110