# 3500/45 Position Monitor

## Datasheet

Cordant™

141537 Rev. T

## Description

The Bently Nevada™ 3500/45 Position Monitor is a 4-channel instrument that accepts input from proximity transducers, Rotary Position Transducers (RPTs), DC Linear Variable Differential Transformers (DC LVDTs), AC Linear Variable Differential Transformers (AC LVDTs), and rotary potentiometers. The monitor conditions the input and compares the conditioned signals with user-programmable alarms.

> The type of measurement and transducer input determine which I/O modules are required (see Transducer Types for Position Measurements on page 12; see Figures and Graphs on page 15; and see I/O Modules for AC LVDTs on page 17.)

You can program each channel using the 3500 Rack Configuration Software to perform the following functions:

- Axial (thrust) Position
- Differential Expansion
- Standard Single Ramp Differential Expansion
- Non-standard Single Ramp Differential Expansion
- Dual Ramp Differential Expansion
- Complementary Differential Expansion
- Case Expansion
- Valve Position

Baker Hughes

The monitor channels are programmed in pairs and can perform up to two of these functions at a time. For example, Channels 1 and 2 can perform one function while channels 3 and 4 may perform the same or a different function.

The primary purpose of the 3500/45 Position Monitor is to provide the following:

- Machinery protection by continuously comparing monitored parameters against configured alarm setpoints to drive alarms
- Essential machine information for operations and maintenance personnel

Each channel, depending on configuration, typically conditions its input signal to generate various parameters called **measured variables**. You can establish **alert setpoints** for each active measured variable and **danger setpoints** for any two of the active measured variables.

# Specifications

## Inputs

| | |
|---|---|
| Signal | Accepts from 1 to 4 signal inputs |
| Power consumption | 7.7 Watts, typical, using Position I/O,<br>**or**<br>8.5 Watts typical, using AC LVDT I/O<br>**or**<br>5.6 Watts typical, using Rotary Potentiometer I/O |
| Input Impedance | 1 MΩ (DC LVDT inputs)<br>10 kΩ (Proximitor or RPT inputs)<br>137 kΩ (AC LVDT inputs)<br>200 kΩ (Rotary Potentiometer inputs) |

## Sensitivity

| | |
|---|---|
| Thrust | 3.94 mV/µm (100 mV/mil)<br>or<br>7.87 mV/µm (200 mV/mil) |
| Differential Expansion | 0.394 mV/µm (10 mV/mil)<br>or<br>0.787 mV/µm (20 mV/mil) |
| Ramp Differential Expansion | 0.394 V/mm (10 mV/mil),<br>0.787 V/mm (20 mV/mil),<br>3.937 V/mm (100 mV/mil),<br>or<br>7.874 V/mm (200 mV/mil) |
| Complementary Input Differential Expansion | 0.394 V/mm (10 mV/mil),<br>0.787 V/mm (20 mV/mil),<br>or<br>3.937 V/mm (100 mV/mil) |
| DC LVDT Case Expansion | 0.05 V/mm (1.25 V/in),<br>0.08 V/mm (1.90 V/in),<br>0.10 V/mm (2.50 V/in),<br>0.18 V/mm (4.50 V/in),<br>0.20 V/mm (5.00 V/in), or<br>0.22 V/mm (5.70 V/in) |
| AC LVDT Case Expansion | 28.74 mV/V/mm (0.73 mV/V/mil),<br>15.35 mV/V/mm (0.39 mV/V/mil), or<br>9.45 mV/V/mm (0.24 mV/V/mil) |
| AC LVDT Valve Position | 28.74 mV/V/mm (0.73 mV/V/mil)<br>15.35 mV/V/mm (0.39 mV/V/mil),<br>9.45 mV/V/mm (0.24 mV/V/mil),<br>10.24 mV/V/mm (0.26 mV/V/mil),<br>7.48 mV/V/mm (0.19 mV/V/mil),<br>5.51 mV/V/mm (0.14 mV/V/mil),<br>3.94 mV/V/mm (0.10 mV/V/mil), or<br>3.15 mV/V/mm (0.08 mV/V/mil) |
| Rotary Potentiometer Valve Position | 41 mV/degree rotation |
| Rotary Position Transducer (RPT) Valve Position | 140 mV/deg rotation,<br>70 mV/deg rotation, or<br>50 mV/deg rotation |

## Outputs

| Front Panel LEDs | |
|---|---|
| OK LED | Indicates when the 3500/45 Position Monitor is operating properly. |
| TX/RX LED | Indicates when the 3500/45 Position Monitor is communicating with other modules in the 3500 rack. |

| | |
|---|---|
| Bypass LED | Indicates when the 3500/45 Position Monitor is in Bypass Mode. |

## Transducer Power Supply

| | |
|---|---|
| Proximitor or RPT | -24 Vdc |
| DC LVDT | +15 Vdc |
| AC LVDT | 2.3Vrms 3400Hz sine wave |
| Rotary Potentiometer | -12.38 Vdc |
| Recorder | +4 to +20 mA<br>Values are proportional to monitor full-scale.<br>The monitor provides individual recorder values for each channel except Ramp and CIDE.<br>Monitor operation is unaffected by short circuits on recorder outputs. |
| Voltage Compliance (current output) | 0 to +12 Vdc range across load<br>Load resistance is 0 to 600 Ω. |
| Resolution | 0.3662 µA per bit<br>±0.25% error at room temperature<br>±0.7% error over temperature range<br>Update rate 100 ms or less |

## Signal Conditioning

Specified at +25°C (+77°F) unless otherwise noted.

### Thrust and Differential Expansion

| | |
|---|---|
| Accuracy | Within ±0.33% of full-scale typical<br>±1% maximum |
| **Frequency Response** | |
| Direct filter | -3 dB at 1.2 Hz |
| Gap filter | -3 dB at 0.41 Hz |

### Ramp Differential Expansion

| | |
|---|---|
| Accuracy | See Ramp Differential Expansion Accuracy on page 14. |
| **Frequency Response** | |
| Direct filter | -3 dB at 1.2 Hz |
| Gap filter | -3 dB at 0.41 Hz |

### Complimentary Input Differential Expansion (CIDE)

| | |
|---|---|
| Accuracy | Within ±0.33% of full-scale typical<br>±1% maximum |
| **Frequency Response** | |
| Direct filter | -3 dB at 1.2 Hz |
| Gap filter | -3 dB at 0.41 Hz |

### Case Expansion

| | |
|---|---|
| Accuracy | Within ±0.33% of full-scale typical<br>±1% maximum |

| Frequency Response | |
|---|---|
| Direct filter | -3 dB at 1.2 Hz |
| Gap filter | -3 dB at 0.41 Hz |

### Valve Position

| | |
|---|---|
| Accuracy | Within ±0.33% of full-scale typical<br>±1% maximum |
| **Frequency Response** | |
| Direct filter | -3 dB at 1.2 Hz |
| Gap filter | -3 dB at 0.41 Hz |

## Physical

| Monitor Module (Main Board) | |
|---|---|
| Dimensions (Height x Width x Depth) | 241.3 mm x 24.4 mm x 241.8 mm<br>(9.50 in x 0.96 in x 9.52 in) |
| Weight | 0.91 kg (2.0 lb) |
| **I/O Modules** | |
| Dimensions (Height x Width x Depth) | 241.3 mm x 24.4 mm x 99.1 mm<br>(9.50 in x 0.96 in x 3.90 in) |
| Weight | 0.20 kg (0.44 lb) |

## Rack Space Requirements

| | |
|---|---|
| Monitor Module | 1 full-height front slot |
| I/O Modules | 1 full-height rear slot |

## Alarms

| | |
|---|---|
| Alarm Setpoints | Use the 3500 Rack Configuration Software to set alert and danger levels for the direct values measured by the monitor.<br><br>Alarms are adjustable from 0 to 100% of full-scale for each measured value. However, when the full-scale range exceeds the range of the transducer, the range of the transducer will limit the setpoint. |
| Accuracy of alarm setpoints | Within 0.13% of the desired value |

### Alarm Time Delays

You can program alarm delays using the 3500 Rack Configuration Software from one to 60 seconds in one second intervals.

| | |
|---|---|
| Alert | From one to 60 seconds in one second intervals |
| Danger | 0.1 seconds or from one to 60 seconds in 0.1 second intervals |

## Measured Variables

Position measurements are used for machine protection and condition monitoring. The 3500/45 Position Monitor returns values for the following measured variables depending on configuration.

| | |
|---|---|
| Thrust Position | Direct<br>Gap |



Baker Hughes

| | |
|---|---|
| Differential expansion | Direct<br>Gap |
| Ramp Differential Expansion | Composite<br>Direct<br>Gap |
| CIDE | Composite<br>Direct<br>Gap |
| Case expansion | Composite<br>Direct and position |
| Value position | Direct and position |

## Environmental Limits

| | |
|---|---|
| Operating Temperature | When used with Internal/External Termination I/O Module:<br>-30°C to +65°C<br>(-22°F to +150°F) |
| Storage Temperature | -40°C to +85°C<br>(-40°F to +185°F) |
| Humidity | 95%<br>Non-condensing |

## Firmware and Software Requirements

When adding the 3500/45 Position Monitor to an existing 3500 system, the following firmware and software versions or later are required:

- 3500/20 RIM Firmware rev. G
- 3500 Configuration Software 2.41
- 3500 Data Acquisition 2.20
- 3500 Operator Display 1.20
- 3500/93 Display Interface Module 135799-01
- Firmware rev. G
- For Valve Position using RPT, you must have 3500 Configuration Software 3.00 or greater.

# Compliance and Certifications

## FCC

This device complies with part 15 of the FCC Rules. Operation is subject to the following two conditions:

- This device may not cause harmful interference.
- This device must accept any interference received, including interference that may cause undesired operation.

## EMC

European Community Directive:

EMC Directive 2014/30/EU

Standards:

EN 61000-6-2; Immunity for Industrial Environments
EN 61000-6-4; Emissions for Industrial Environments

## Electrical Safety

European Community Directive:

LV Directive 2014/35/EU

Standards:

EN 61010-1

## RoHS

European Community Directive:

RoHS Directive 2011/65/EU

## China RoHS

Cables associated with the product(s) mentioned in this datasheet have an EFUP designation of 15 years, in accordance with SJ/T 11364-2024.

## Maritime

DNV GL rules for classification – Ships, offshore units, and high speed and light craft

ABS Rules for Condition of Classification, Part 1

- Steel Vessels Rules
- Offshore Units and Structures

# Hazardous Area Approvals

For the detailed listing of country and product-specific approvals, refer to the *Approvals Quick Reference Guide (108M1756)*.

For additional technical documentation, please log in to bntechsupport.com and access the Bently Nevada Media Library.

## cNRTLus

Class I, Zone 2: AEx/Ex nA nC ic IIC T4 Gc;
Class I, Zone 2: AEx/Ex ec nC ic IIC T4 Gc;
Class I, Division 2, Groups A, B, C, and D;

T4 @ Ta= -20˚C to +65˚C (-4˚F to +149˚F)
When installed per drawing 149243 or 149244.

## ATEX/IECEx

Ex II 3 G

Ex nA nC ic IIC T4 Gc
Ex ec nC ic IIC T4 Gc

T4 @ Ta= -20˚C to +65˚C
(-4˚F to +149˚F)
When installed per drawing 149243 or 149244.

# Ordering Information

For the detailed listing of country and product-specific approvals, refer to the *Approvals Quick Reference Guide (108M1756)*.

For additional technical documentation, please log in to bntechsupport.com and access the Bently Nevada Media Library.

## Position Monitor 3500/45-AA-BB

| **A: I/O Module Type** | |
|---|---|
| **01** | Position I/O Module with Internal Terminations (Proximitor, RPT, DC LVDT) |
| **02** | Position I/O Module with External Terminations (Proximitor, RPT, DC LVDT) |
| **05** | AC LVDT Position I/O Module with Internal Terminations |
| **06** | AC LVDT Position I/O Module with External Terminations |
| **B: Agency Approval** | |
| **00** | None |
| **01** | cNRTLus (Class 1, Division 2) |
| **02** | ATEX / IECEx / CSA (Class 1, Zone 2) |

You must order external termination blocks and cables separately for each I/O module with external termination.

## External Termination Blocks

| | |
|---|---|
| 125808-06 | Position External Termination Block (Euro-style connectors) for Proximitor, RPT and DC LVDT inputs |
| 128015-06 | Position External Termination Block (Terminal Strip connectors) for Proximitor, RPT and DC LVDT inputs |
| 141208-01 | AC LVDT External Termination Block (Euro-style connectors) for AC LVDT inputs |
| 128702-01 | Recorder External Termination Block (Euro-style connectors) |
| 128710-01 | Recorder External Termination Block (Terminal Strip connectors) |

## Cables

### 3500 Transducer (XDCR) to External Termination (ET) Block Cable 129525-AAAA-BB

| A: I/O Cable Length | |
|---|---|
| **0005** | 5 feet (1.5 meters) |
| **0007** | 7 feet (2.1 meters) |
| **0010** | 10 feet (3.0 meters) |
| **0025** | 25 feet (7.6 meters) |
| **0050** | 50 feet (15.2 meters) |
| **0100** | 100 feet (30.5 meters) |
| **B: Assembly Instructions** | |
| **01** | Not assembled |
| **02** | Assembled |

### 3500 Recorder Output to External Termination (ET) Block Cable 129529-AAAA-BB

| A: I/O Cable Length | |
|---|---|
| **0005** | 5 feet (1.5 meters) |
| **0007** | 7 feet (2.1 meters) |
| **0010** | 10 feet (3.0 meters) |
| **0025** | 25 feet (7.6 meters) |
| **0050** | 50 feet (15.2 meters) |
| **0100** | 100 feet (30.5 meters) |
| **B: Assembly Instructions** | |
| **01** | Not assembled |
| **02** | Assembled |

## Spares

| | |
|---|---|
| 176449-04 | 3500/45 Position Monitor |
| 135137-01 | Position I/O Module with Internal Terminations for use with Proximitors, RPTs or DC LVDTs |
| 135145-01 | Position I/O Module with External Terminations for use with Proximitors, RPTs or DC LVDTs |
| 139554-01 | AC LVDT Position I/O Module with Internal Terminations for use with AC LVDTs |
| 139567-01 | AC LVDT Position I/O Module with External Terminations for use with AC LVDTs |
| 125808-06 | Position-Prox/DC LVDT-Euro |
| 141208-01 | Position-Prox/AC LVDT-Euro |
| 128702-01 | Recorder ET Block-Euro |
| 128015-06 | Position External Termination Block (Terminal Strip connectors) for Proximitor, RPT and DC LVDT inputs |
| 128710-01 | Recorder External Termination Block (Terminal Strip connectors) |
| 166M4363 | Connector Header Push-in-Spring Type (Alternative for PN 00580441) |

| | |
|---|---|
| 166M2389 | Connector Header Push-in-Spring Type (Alternative for PN 00580434) |
| 166M2388 | Connector Header Push-in-Spring Type (Alternative for PN 00580432) |
| 166M2379 | Connector Header Push-in-Spring Type (Alternative for PN 00580443) |

## Transducer Types for Position Measurements

The following table lists transducer types for each position measurement:

| Measurement | Transducer Type | |
|---|---|---|
| Thrust | Proximitors | |
| | 3300XL 8 mm<br>3300 8 mm<br>3300 5 mm<br>3300 16 mm HTPS<br>7200 5 mm<br>7200 8 mm | 7200 11 mm<br>3300XL 11mm<br>7200 14 mm<br>3000 (-18V)<br>3000 (-24V)<br>3300 RAM |
| Differential Expansion | Proximitors | |
| | 25 mm Extended Range<br>35 mm Extended Range<br>50 mm Extended Range | |
| Ramp Differential Expansion | Proximitors For Ramp and Flat Channels | Proximitors For Flat Channel |
| | 3300XL 11mm<br>7200 11 mm<br>7200 14 mm<br>3300 16 mm HTPS<br>25 mm Extended Range<br>35 mm Extended Range<br>50 mm Extended Range<br>50 mm DE Transducer | 3300XL 8 mm<br>3300 8 mm<br>7200 5 mm<br>7200 8 mm |
| Complementary Input Differential Expansion | Proximitors | |
| | 3300XL 11mm<br>7200 11 mm<br>7200 14 mm<br>3300 16 mm HTPS<br>25 mm Extended Range | 35 mm Extended Range<br>50 mm Extended Range<br>50 mm DE Transducer |
| Case Expansion (Channels 3 and 4 only) | DC LVDTs | AC LVDTs |
| | 25 mm (1 in)<br>50 mm (2 in)<br>101 mm (4 in) | 25 mm (1 in)<br>50 mm (2 in)<br>101 mm (4 in) |

| Measurement | Transducer Type | | |
|---|---|---|---|
| | AC LVDTs | Rotary Potentiometer | Rotary Position Transducer |
| Valve Position | 25 mm (1 in)<br>50 mm (2 in)<br>101 mm (4 in)<br>152 mm (6 in)<br>03 mm (8 in)<br>254 mm (10 in)<br>304 mm (12 in)<br>508 mm (20 in) | 50° FS rotation to 300° FS rotation | 100° FS<br>200° FS<br>300° FS |

## Ramp Differential Expansion Accuracy

| Maximum Tolerance in Percent of Full-Scale | Channel Pair Type and Configuration Parameters | | |
|---|---|---|---|
| | Standard Single Ramp Differential Expansion | Nonstandard Signal Ramp Differential Expansion | Dual Ramp Differential Expansion |
| ±1.0 | Ramp angles 4-45 degrees<br>Greater than 3 Vdc full-scale span<br>Same model transducers on each channel | Ramp angles 4-70 degrees<br>Greater than 3 Vdc full-scale span | Ramp angles 4 - 70 degrees<br>Greater than 3 Vdc full-scale span |
| ±1.25 | Ramp angles 4-70 degrees<br>Greater than 3 Vdc full-scale span<br>Same model transducer on both channels | N/A | N/A |
| ±1.5 | Ramp angles 4-70 degrees<br>Greater than 3 Vdc full-scale span<br>Different model transducer on each channel | N/A | N/A |
| ±2.0 | Ramp angles 4-70 degrees<br>Less than 3 Vdc full-scale span<br>Same or Different model transducer on each channel | Ramp angles 4-70 degree<br>Less than 3 Vdc full-scale span | Ramp angles 4-70 degrees<br>Less than 3 Vdc full-scale span |

## Figures and Graphs

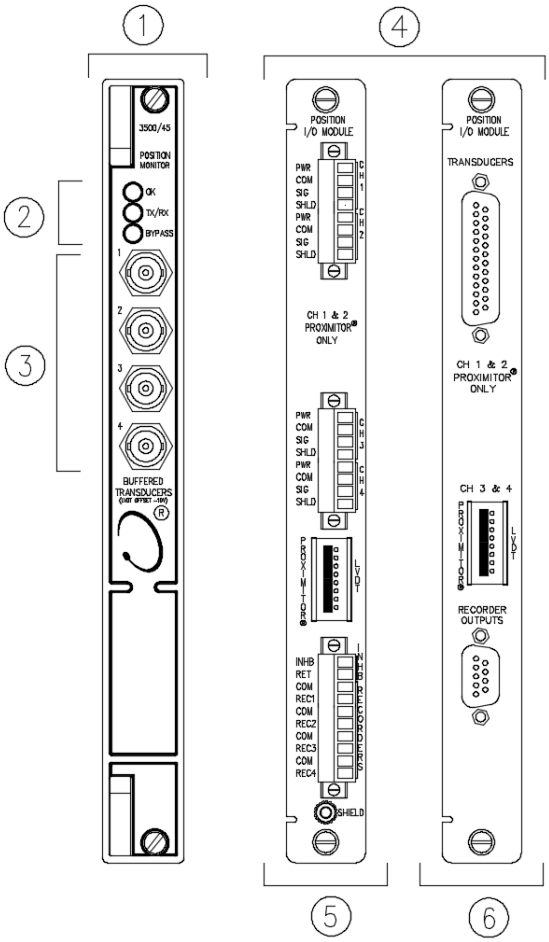


1. Front View of 3500/45 Position Monitor
2. Status LEDs
3. Buffered Transducer Outputs
4. Rear Views of I/O Modules with Proximitors, Rotary Position Tranducers or DC LVDTs.
5. Position I/O Module, Internal Termination, for Use with Proximitors, Rotary Position Transducers, or DC LVDTs
6. Position I/O Module, External Termination, for Use with Proximitors, Rotary Position Transducers, or DC LVDTs

**Figure 1: Front and Rear Views of 3500/45 Position Monitor and I/O modules for use with Proximitor, Rotary Position Transducer and DC LVDT I/Os**

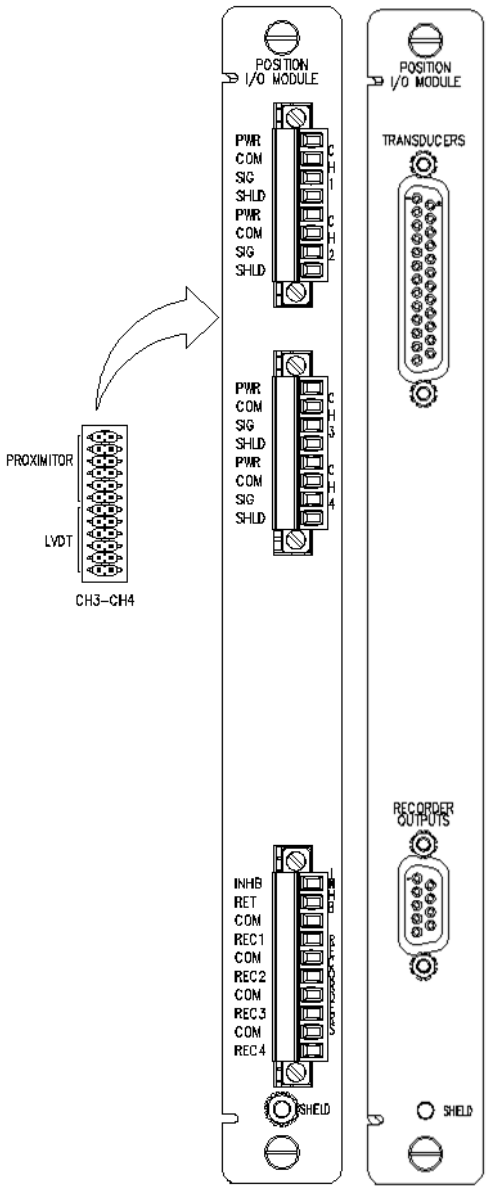


**Figure 2: Side View of I/O Modules**

The I/O modules with internal or external terminations have the same jumpers.

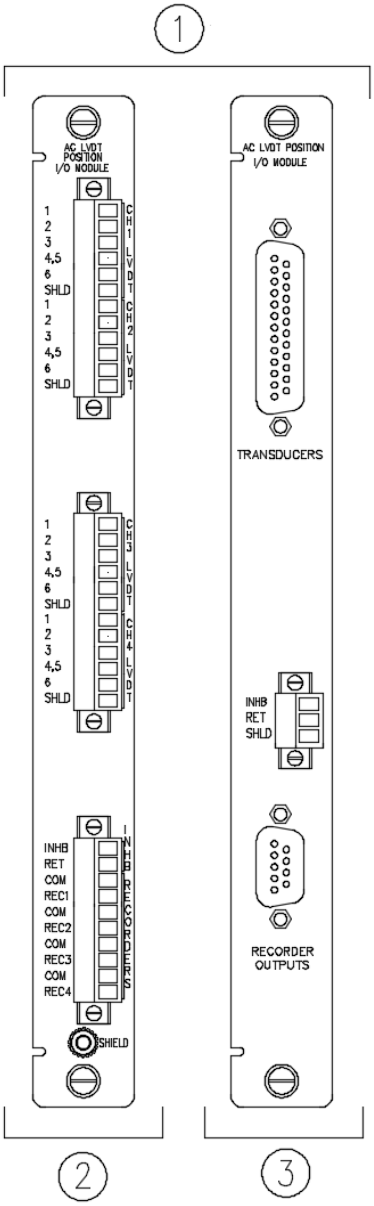


1. Rear Views of I/O Modules Used with AC LVDTs
2. Position I/O Module, Internal Termination, for Use with AC LVDTs
3. Position I/O Module, External Termination, for Use with AC LVDTs

**Figure 3: I/O Modules for AC LVDTs**

# Thrust and Valve Positions

## Thrust Position

The following picture depicts the axial position of the rotor with respect to the thrust bearing or some fixed reference:

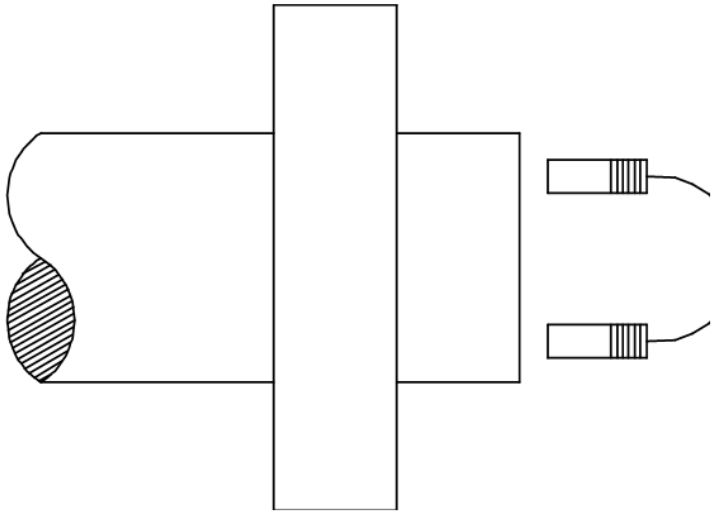

## Valve Position

The following picture depicts the relative measurement of the position of a process inlet valve stem based on its full stroke, or the relative measurement of the rotational position of a cam shaft based on its full rotation:

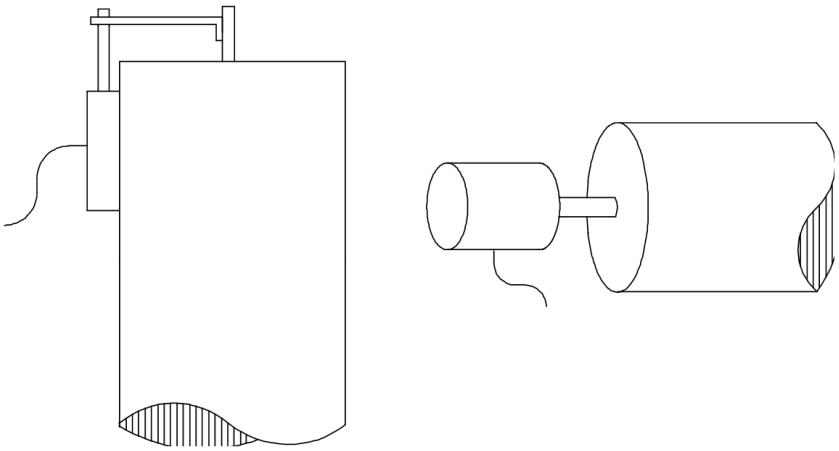

## Differential Expansion

The following picture depicts shaft growth relative to the machine case:

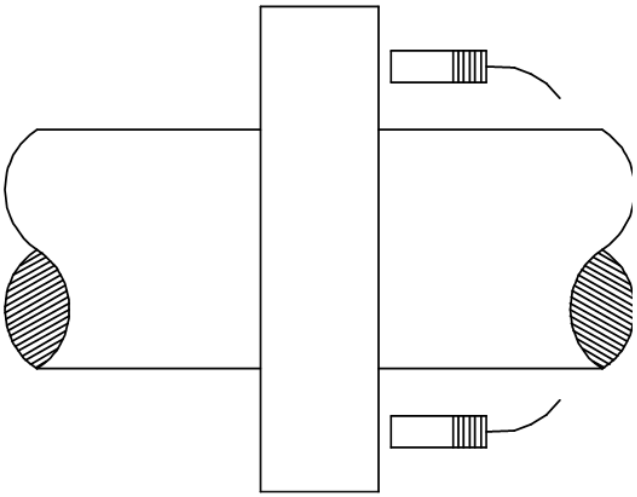

The following picture depicts standard single ramp differential expansion:

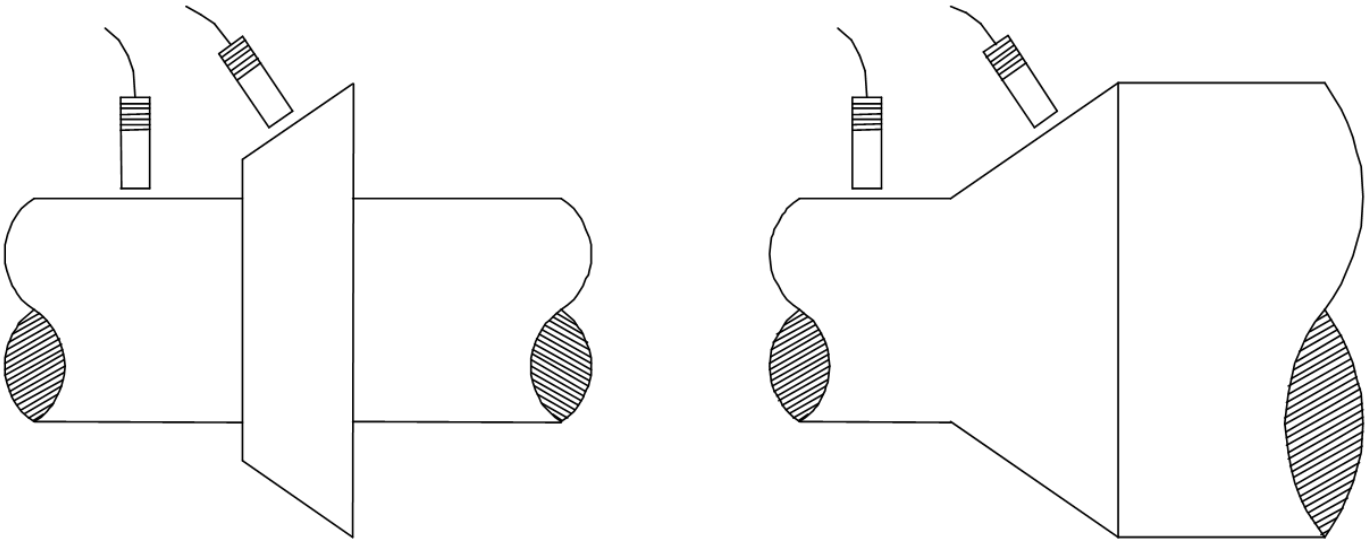

The following picture depicts non-standard single ramp differential expansion:

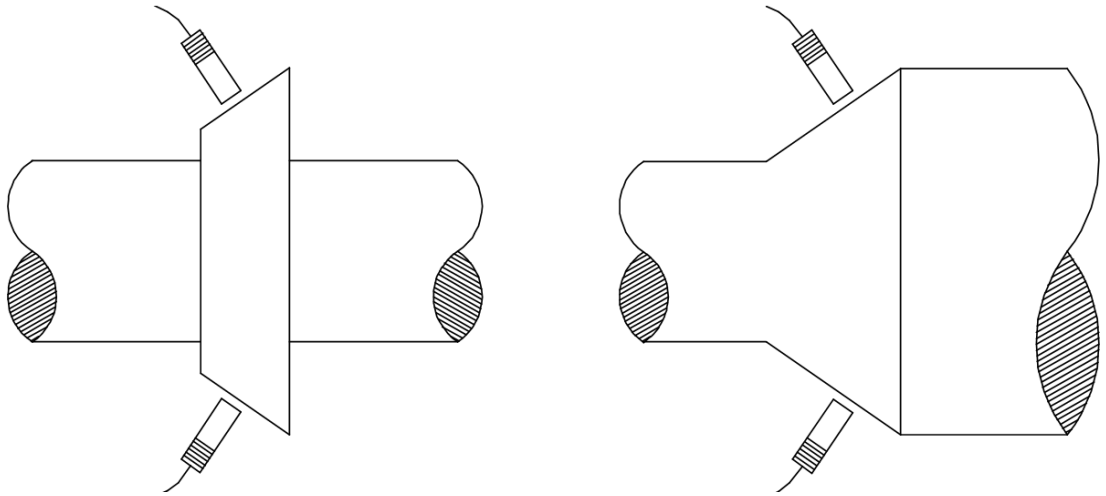

The following picture depicts a dual ramp differential expansion:

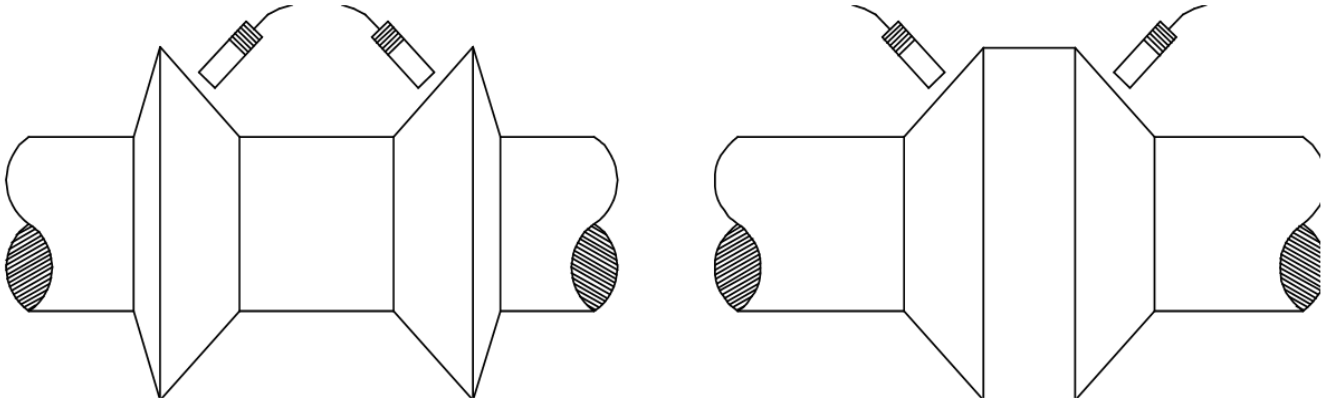

The following image depicts a complementary input differential expansion (CIDE) which uses a combination of two probes to increase the measurement range to twice the range of a single proble:

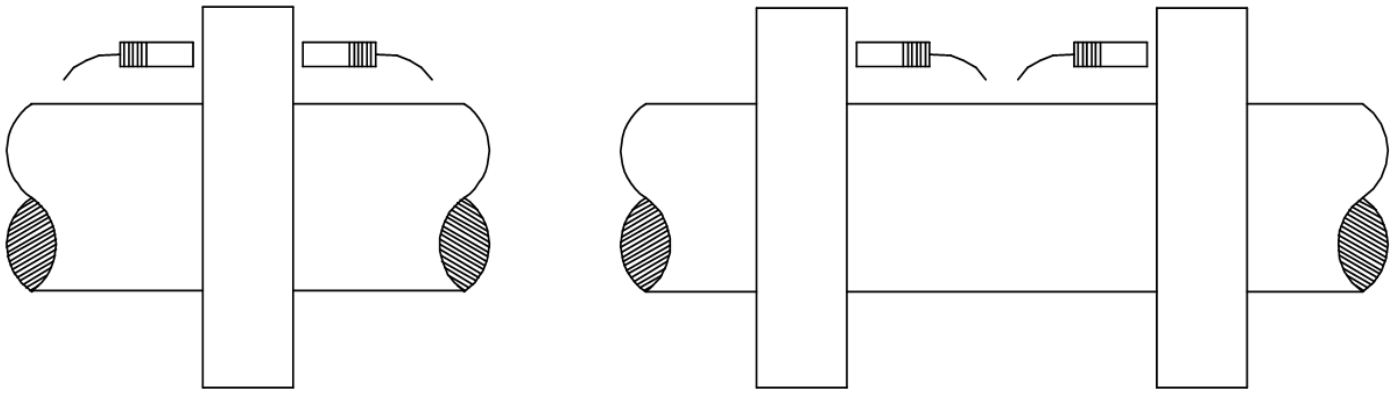

## Case Expansion

The following picture depicts a single case expansion which is the measurement of the machine casing growth relative to its foundation:

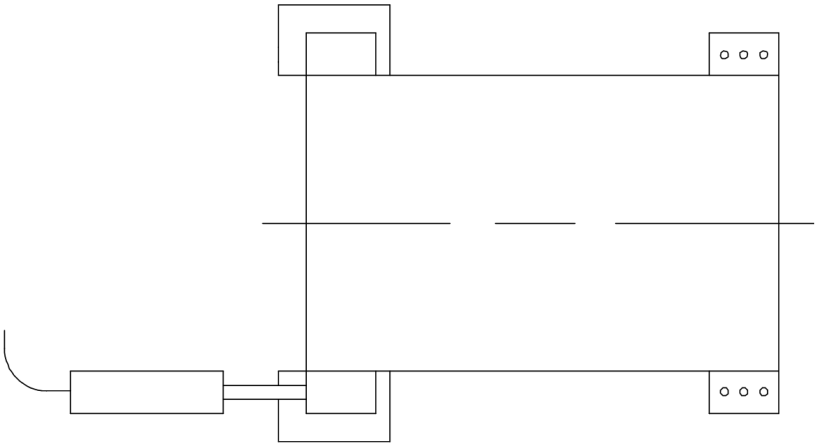

The following picture depicts a dual case expansion:

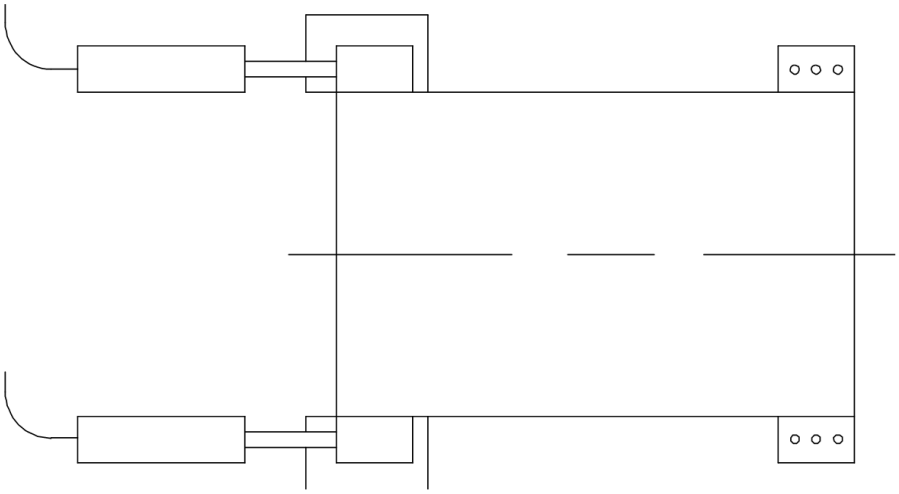

Copyright 2025 Baker Hughes Company. All rights reserved.

Bently Nevada, a Baker Hughes Company

1631 Bently Parkway South, Minden, Nevada USA 89423

https://bntechsupport.com