ABB MEASUREMENT & ANALYTICS | DATA SHEET

CoriolisMaster FCB100, FCH100

Coriolis mass flowmeter

ENGINEERED
TO OUTRUN

—

Measurement made easy

Compact device for high-precision measurement of mass and volume flow, density, temperature and concentration with just one device

—

The ideal transmitter for system integration

- Modbus for quick and comprehensive communication
- Two fast digital outputs that can be configured as pulse outputs, frequency outputs or binary outputs
- Lower pressure loss, self-draining
- Global approvals for explosion protection
- MID / OIML approval for legal metrology

—

Integrated VeriMass device verification and diagnosis

- Predictive maintenance in the process
- Extended maintenance cycles
- Reduced maintenance effort

—

CoriolisMaster Software Tools

- DensiMass for concentration measurements, net mass and volume flow calculations
- FillMass for filling applications

—

CoriolisMaster FCH100

- For hygienic applications

Overview – models

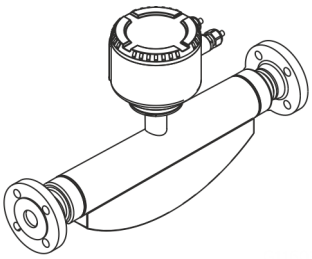

Figure 1: FCB1xx/FCH1xx

Model number	FCB1xx for standard applications	FCH1xx for hygienic applications
Process connections		
Flange DIN 2501 / EN 1092-1	DN 10 to 200, PN 40 to 100	—
Flange ASME B16.5	DN ½ to 8in, CL150 to CL1500	—
JIS flange	DN 10 to 200; JIS 10K to 20K	—
Pipe fitting DIN 11851	DN 10 to 100 (¼ to 4 in)	DN 20 to 100 (¾ to 4 in)
Pipe fitting SMS 1145	DN 25 to 80 (1 to 3 in)	—
Tri-clamp DIN 32676 (ISO 2852)	DN 15 to 100 (½ to 4 in)	DN 20 to 100 (¼ to 4 in)
Tri-clamp BPE	DN ⅜ to 4 in	DN ⅜ to 4 in
Female thread DIN ISO 228 and ASME B 1.20.1	DN 15; PN 100	—
Other connections	On request	On request
Wetted material	Stainless steel 1.4435 or 1.4404 (AISI 316L), nickel alloy C4 / C22	Stainless steel, polished 1.4404 (AISI 316L) or 1.4435 (AISI 316L)
Approvals and certificates		
Explosion protection ATEX, IECEx	Zone 0, 1, 2, 21, 22	Zone 0, 1, 2, 21, 22
Explosion protection conforming to cFMus	Class I Div. 1, Class I Div. 2, Zone 0, 1, 2, 21	Class I Div. 1, Class I Div. 2, Zone 0, 1, 2, 21
Hygiene approvals	FDA compliant*	FDA compliant*
Legal metrology	OIML R117, MID, devices for legal metrology in accordance with API / AGA	
Additional approvals	Available from www.abb.com/flow or upon request.	

* Material of the wetted parts: 1.4435 or 1.4404 (AISI 316L)

… Overview – models

… Device description

Model number	FCB130	FCB150	FCH130	FCH150
Measuring accuracy for liquids				
Mass flow*	0.4 %, 0.25 % and 0.2 %	0.1 % and 0.15 %	0.4 %, 0.25 % and 0.2 %	0.1 % and 0.15 %
Volume flow*	0.4 %, 0.25 % and 0.2 %	0.15 % and ±0.11 %	0.4 %, 0.25 % and 0.2 %	0.15 % and ±0.11 %
Density	0.01 kg/l	• 0.002 kg/l • 0.001 kg/l (optional) • 0.0004 kg/l (optional)	0.01 kg/l	• 0.002 kg/l • 0.001 kg/l (optional) • 0.0004 kg/l (optional)
Temperature	1 K	0,5 K	1 K	0,5 K
Measuring accuracy for gases*	1 %	0,5 %	1 %	0,5 %
Permissible measuring medium temperature	−50 to 160 °C (−58 to 320 °F)	−50 to 205 °C (−58 to 400 °F)	−50 to 160 °C (−58 to 320 °F)	−50 to 205 °C (−58 to 400 °F)
Permissible ambient temperature	−40 to 70 °C (−40 to 158 °F)			
Power supply	11 to 30 V DC, nominal voltage: 24 V DC			
IP rating in accordance with EN 60529	IP65 / IP67 / IP68 (immersion depth: 5 m), NEMA 4X			
Communication	Modbus® RTU, RS485			
Outputs in serial production	• Digital output 1: passive • Digital output 2: passive			
External output zero return	Yes			
External totalizer reset	Yes			
Flow measurement in forward flow and reverse flow direction	Yes			
Empty pipe detection	Yes, based on preconfigured density alarm			
Self-monitoring and diagnosis	Yes			
Field optimization for flow and density	Yes			
Concentration measurement 'DensiMass'	Yes, optional on models FCB150 and FCH150			
'FillMass' filling function	Yes, optional on models FCB150 and FCH150			
"VeriMass" diagnosis function	Yes, optional			

* Indication of accuracy in % of the measured value (% of meas.val.)

General data

Device description

The CoriolisMaster FCB100, FCH100 is the low-cost and simple ABB mass flowmeter with the new DSP transmitter.

The device is equipped with a Modbus® interface and two fast digital outputs that can be configured as pulse, frequency or binary outputs.

The CoriolisMaster FCB100, FCH100 operates in accordance with the Coriolis principle. The design offers the following benefits:

- Space-saving, robust design.
- Variety of process connections.
- Two digital outputs.
- Communication viaModbus® RTU protocol.
- Ex approval The user can select the "i" or "e" type of protection for the output circuits; the type chosen will depend on the circuits which are connected.

… General data

FillMass batch function

Only for FCB150 / FCH150

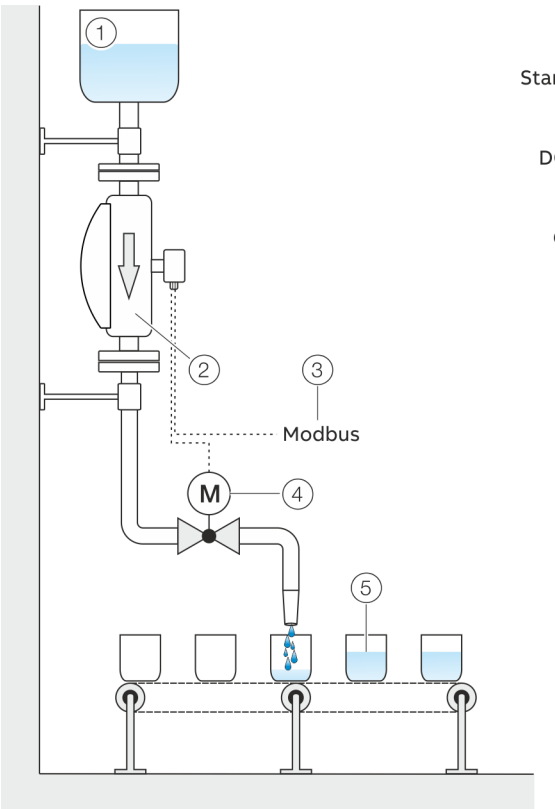

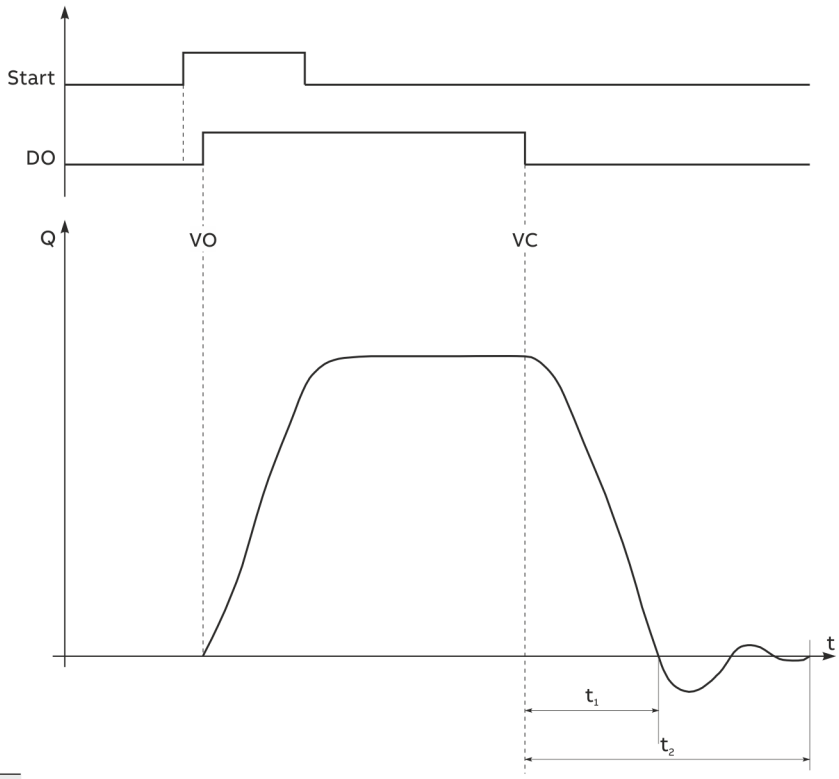

1. Supply tank
2. Sensor
3. Start / stop fill operation (Modbus)
4. Fill valve
5. Filling tank

Start Start of the filling operation via Modbus
DO State of the digital output for the fill valve
Q Flow rate
VO Valve open (filling started)
VC Valve closed (fill quantity reached)
t_1 Valve closing time
t_2 Overrun time

Figure 2: FillMass fill function

The integrated FillMass fill function allows filling operations with filling times of > 3 s.
For this purpose, the filling quantity is given via an adjustable totalizer.
The Modbus interface is used to configure and control the fill function.
The valve is triggered via one of the digital outputs and closed again once the preset filling quantity is reached.
The transmitter measures the overrun quantity and calculates the overrun correction from this.
Additionally, the low flow cut-off can be activated if required.

Concentration measurement DensiMass

Only for FCB150 / FCH150

The transmitter can calculate the current concentration from the measured density and temperature using concentration matrices.

The following concentration matrices are preconfigured in the transmitter as standard:

- Concentration of sodium hydroxide in water
- Concentration of alcohol in water
- Concentration of sugar in water
- Concentration of maize starch in water
- Concentration of wheat starch in water
- Concentration of antifreeze in water

In addition, the user can enter two user-defined matrices:

- Up to 100 values with one matrix
- Up to 50 values per matrix with two matrices

Calculating standard volumes and standard densities of liquids

If a suitable matrix is available, the DensiMass function also allows the measured volume to be corrected for any selected temperature.

The measured density can also be corrected for a given temperature.

However, this is only possible when measuring liquids and after entering an appropriate matrix.

This correction can also be performed using the default matrices (see above).

The calculated standard volumes and standard densities can also be issued for all other process variables.

The software 'DensiMatrix' is available for the easy input of the matrix.

Accuracy of the concentration measurement

The accuracy of the concentration measurement is determined in the first instance by the quality of the matrix data entered.

However, as the calculation is based on temperature and density (the input variables), the accuracy of the concentration measurement is ultimately determined by the measuring accuracy of the temperature and the density.

Example:

Density of 0% alcohol in water at 20 °C (68 °F): 998.23 g/l

Density of 100 % alcohol in water at 20 °C (68 °F): 789.30 g/l

Concentration	Density
100 %	208.93 g/l
0.48 %	1 g/l
0.96 %	2 g/l
0.24 %	0.5 g/l

Thus, the accuracy class of the density measurement directly determines the accuracy of the concentration measurement.

… General data

Enhanced Coriolis Control (ECC)function

The Enhanced Coriolis Control (ECC)function has been specially developed for demanding applications, such as:

- Liquids with gas phase
- Liquids with rapidly changing densities
- Fill operations with surge phases at the beginning or end
- Liquids with high viscosity

After the ECC function is activated, the device applies a particularly quick control algorithm to control the oscillating tubes in the device and therefore provide significantly better behavior in the applications listed above.

In addition, the ECC function offers a special noise suppression filter for mass flow measurement and density measurement.

In the case of particularly demanding applications, disruptions can thus be actively filtered and the measurement can be implemented in a considerably more stable manner.
For the filters, a variety of time constants between 0.5 s and 8 s can be selected.

Since Coriolis mass flowmeters measure the mass flow and density separately, the CoriolisMaster features a separate filter each for mass flow measurement and density measurement.

Devices for legal metrology in accordance with MID / OIML R117

The Coriolis mass flowmeters CoriolisMaster FCBx50 are type-tested for legal metrology in accordance with MID / OIML R117 in accuracy classes 0.5 and 0.3.

Additional information can be found on the corresponding certificate. The certificate is available in the download area at www.abb.com/flow.

When ordering, select one of the optional order codes:

- CT4 – Approved for official calibration in accordance with MID (OIMLR117 Cl0.5)
- CT3 – Approved for official calibration in accordance with MID (OIMLR117 Cl0.5/0.3)

All Coriolis mass flowmeters FCBx50 for legal metrology receive a 3-point flow rate calibration at the factory, which demonstrates measuring accuracy in accordance with the OIML-R117-2019 guidelines at minimum (Q_{min}), medium and maximum (Q_{max}) flow rates.

Nominal diameter	Q1 (tol. +10 %) [kg/h]	Q2 (tol. ±10 %) [kg/h]	Q3 (tol. −20 %) [kg/h]
DN 15	365	2489	6500
DN 25	1620	10570	27000
DN 50	4550	27335	67000
DN 80	14500	91489	145000
DN 100	23000	124597	290000
DN 150	32000	178053	290000*

* corresponds to approx. 60 % Q_{max}CT

Note
Use in accordance with API / AGAstandards is also possible.

Please observe the additional remarks in the operating and commissioning instruction.

Applications in accordance with API (American Petroleum Institute)

For applications in accordance with API Chapter 5.6, the CoriolisMaster FCB100, FCH100 provides special parameters:

- Calibration Pressure: Measuring medium pressure at which the device was calibrated at ABB.
- Calibration Temp.: Measuring medium temperature at which the device was calibrated at ABB.
- Pressure Level: Parameters for entry of the current operating pressure in the device by the user.
- Flow Compens. factor: Display / output of the current compensation factor for mass flow calculation.
- Density Comp. factor: Display / output of the current compensation factor for density calculation.
- P.Comp.Status (PECI): In accordance with API, the user can set the following states:
  - 1: CT: Compensation in the Coriolis flowmeter based on the current pressure entered in the ‘Pressure Level’ parameter.
  - 2: TD: Compensation in the Coriolis flowmeter switched off – compensation is performed externally (Tertiary Device)
  - 3: OS: Compensation in the Coriolis flowmeter switched off – compensation is not performed on site (Off Site)
  - 4: NA: Compensation in the Coriolis flowmeter switched off – compensation is not deemed to be necessary, since the device is operating at a pressure for which the device has been proved.

VeriMass erosion monitor

The integrated diagnosis function VeriMass allows the status of the meter tube to be monitored. This enables changes due to material erosion and the formation of deposits on the meter tube walls to be identified at an early stage.
If the set limit value is exceeded, an alarm is triggered, for example via the programmable digital output or HART, depending on the configuration.
The limit value for the erosion monitor can be set either automatically or manually.

Automatic adjustment
The transmitter monitors the sensor's driver current over a prolonged period and creates a ‘fingerprint’ for the relevant application. The transmitter generates a corresponding tolerance value for deviations in the driver current.
The transmitter compares the behavior of the driver current with the generated fingerprint and triggers the relevant error message in the event of prolonged deviations.

Manual adjustment
For applications where automatic adjustment of the erosion monitor does not provide a satisfactory result, the erosion monitor can be adjusted manually.
For more information, please contact ABB Service or the sales organization.

Flowmeter sensor

General installation conditions

Installation location and assembly

Note the following points when selecting the installation location and when mounting the sensor:

- The ambient conditions (IP rating, ambient temperature range $T_{ambient}$) of the device must be adhered to at the installation location.
- Sensors and transmitters must not be exposed to direct sunlight. If necessary, provide a suitable means of sun protection on site. The limit values for ambient temperature $T_{ambient}$ must be adhered to.
- On flange devices, ensure that the counterflanges of the piping are aligned plane parallel. Only install flange devices with suitable gaskets.
- Prevent the sensor from coming into contact with other objects.
- The device is designed for industrial applications.
  No special EMC protective measures are required if the electromagnetic fields and interference at the installation location of the device comply with 'Best Practice' (in accordance with the standards listed in the declaration of conformity).
  Maintain a suitable distance from electromagnetic fields and interference that extend beyond the usual dimensions.

Seals

Users are responsible for selecting and mounting suitable gaskets (material, shape).
Note the following points when selecting and mounting gaskets:

- Use gaskets made from a material that is compatible with the measuring medium and measuring medium temperature.
- Gaskets must not extend into the flow area, since possible turbulence may influence the accuracy of the device.

Calculating pressure loss

Pressure loss depends on the properties of the medium and the flow rate.
A good aid for pressure loss calculation is the Online ABB Product Selection Assistant (PSA) for flow at www.abb.com/flow-selector.

Brackets and supports

No special supports or damping are required for the device when the device is used and installed as intended.
In systems designed in accordance with 'Best Practice', the forces acting on the device are already sufficiently absorbed. This is also true of devices installed in series or in parallel.
For heavier devices, it is advisable to use additional supports / brackets on site. Doing this prevents damage to the process connections and piping from lateral forces.
Please observe the following points:

- Mount two supports or brackets symmetrically in the immediate vicinity of the process connections.
- Do not fasten any supports or brackets to the housing of the flowmeter sensor.

Note

For increased vibration load, such as for example on ships, the use of the 'CL1' marine design is recommended.

Inlet section

The sensor does not require any inlet section.
The devices can be installed directly before/after manifolds, valves or other equipment, provided that no cavitation is caused by this equipment.

Mounting position

The flowmeter operates in any mounting position.
Depending on the measuring medium (liquid or gas) and the measuring medium temperature, certain mounting positions are preferable to others.For this purpose, consider the following examples.
The preferred flow direction is indicated by the arrow on the sensor.The flow will be displayed as positive.
The specified measuring accuracy can be achieved only in the calibrated flow direction (for forward flow calibration, this is only in the direction of the arrow; for the optional forward flow and reverse flow calibration, this can be in both flow directions).

Liquid measuring media

Observe the following points to avoid measuring errors:

- The meter tubes must always be completely filled with the measuring medium.
- The gases dissolved in the measuring medium must not leak out. To safeguard this, a minimum back pressure of 0.2 bar (2.9 psi) is recommended.
- The minimum vapor pressure of the measuring medium must be maintained when there is negative pressure in the meter tube or when liquids are gently simmering.
- During operation, there must be no phase transitions in the measuring medium.

Vertical installation

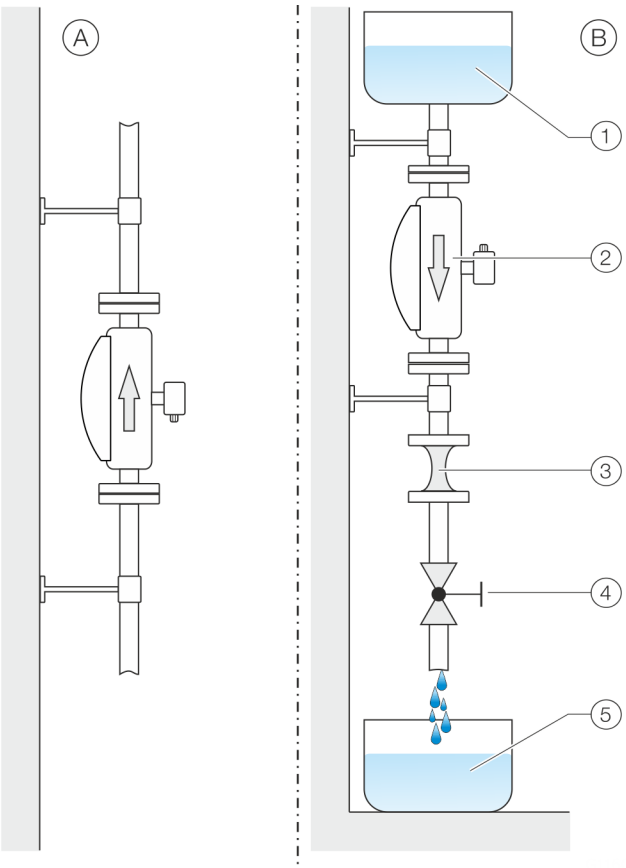

(1) Supply tank
(2) Sensor
(3) Piping constriction / orifice
(4) Turn-off device
(5) Filling tank

Figure 3: Vertical installation

(A) For vertical installation in a riser, no special measures are required.
(B) For vertical installation in a downpipe, a piping constriction or an orifice must be installed below the sensor. Doing this prevents the sensor from draining during the measurement.

Horizontal installation

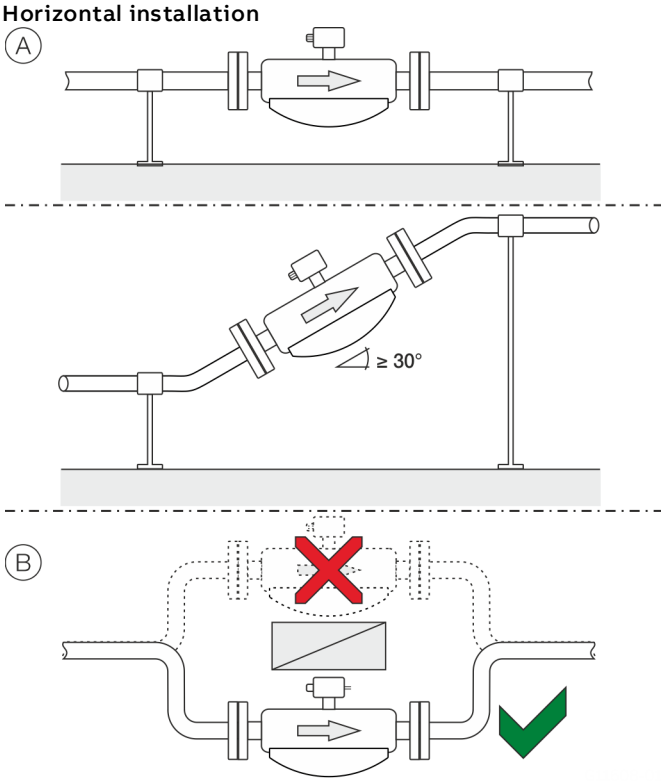

Figure 4: Horizontal installation

(A) For liquid measuring media and horizontal installation, the transmitter and terminal box must point upward. If a self-draining installation is required, the sensor must be mounted at an incline of ≥ 30°.
(B) Installing the sensor at the highest point of the piping leads to an increased number of measuring errors due to the accumulation of air or the formation of gas bubbles in the meter tube.

... Flowmeter sensor

... General installation conditions

Gaseous measuring media

Observe the following points to avoid measuring errors:

- Gases must be dry and free of liquids and condensates.
- Avoid the accumulation of liquids and the formation of condensate in the meter tube.
- During operation, there must be no phase transitions in the measuring medium.

If there is a risk of condensate formation when using gaseous measuring media, note the following:
Ensure that condensates cannot accumulate in front of the sensor.
If this cannot be avoided, we recommend that the sensor is installed vertically with a downward flow direction.

Vertical installation

For vertical installation, no special measures are required.

Horizontal installation

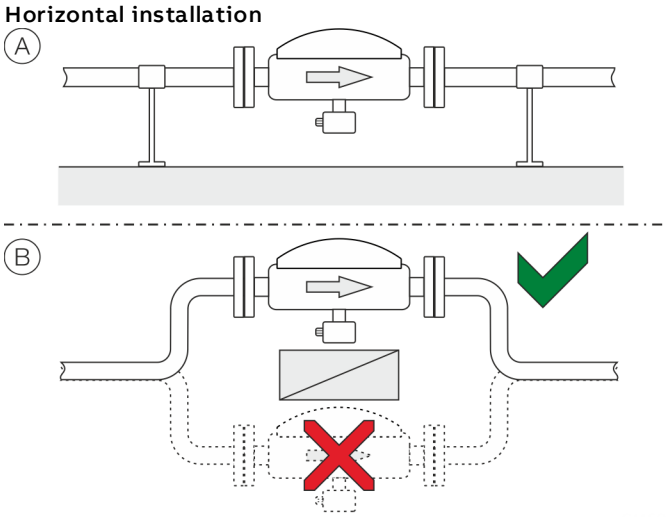

Figure 5: Horizontal installation

Ⓐ For gaseous measuring media and horizontal installation, the transmitter and terminal box must point downward.
Ⓑ Installing the sensor at the lowest point of the piping leads to an increased number of measuring errors due to the accumulation of liquid or the formation of condensates in the meter tube.

Turn-off devices for the zero point adjustment

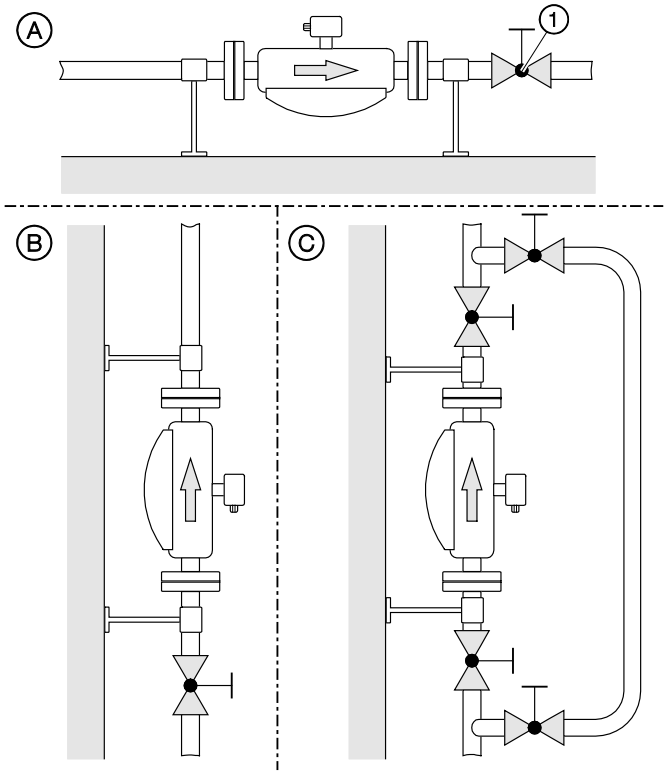

① Turn-off device

Figure 6: Mounting options for turn-off devices (example)

To guarantee the conditions for zero point balancing under operating conditions, turn-off devices are required in the piping:

Ⓐ At least on the outlet side when the transmitter is mounted in horizontal position
Ⓑ At least on the inlet side when the transmitter is mounted in vertical position.
Ⓒ In order to perform balancing during an ongoing process, it is advisable to mount a bypass pipe.

Sensor insulation

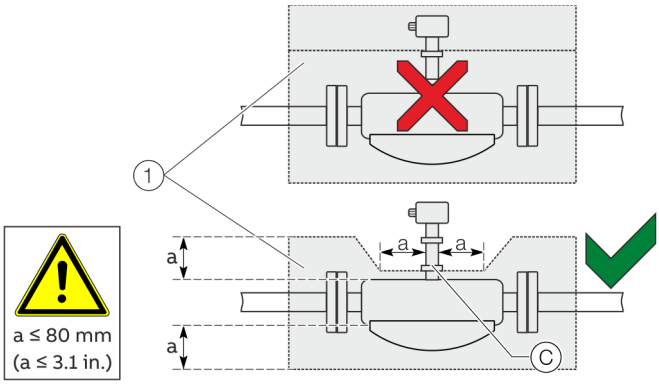

1 Insulation

Figure 7: Installation at T_{medium} −50°to 205 °C (−58 to 400 °F)

The sensor may only be insulated in conjunction with the option TE1 'Tower length extension – meter insulation capability' or TE2 'Tower length extension – meter insulation capability, potted' as shown in Figure 7.

Heat tracing of the sensor

- When operating the sensor in conjunction with heat tracing, the permissible measuring medium temperature T_{medium} at point C (Figure 7) may not be exceeded at any time!
- When used in potentially explosive atmospheres the device temperature classes, Section **Temperature classes and permissible measuring medium temperature** from page 49 onwards must be complied with!

Devices for legal metrology

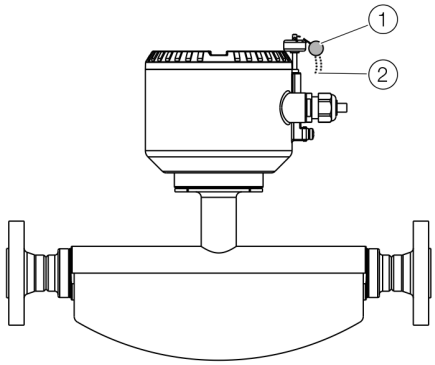

1 Lead seal 2 Lead seal wire

Figure 8: Sealing in accordance with MID / OIML R117 (example)

On devices for legal metrology, the hardware write protection must be activated after commissioning in many cases. This prevents a change in the parameterization of the devices.

To prevent deactivation of the hardware write protection or other manipulations during operation, the transmitter housing and the sensor housing connection box (with remote mount design) must be sealed.
For this purpose, a seal kit is available at ABB.
For the assembly of the seal, please observe the separate 'IN/FCX100/FCX400/MID/OIML-XA' instructions.

… Flowmeter sensor

Designs

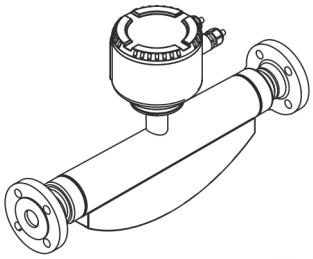

Figure 9: Sensor

Nominal diameter and measuring range

Nominal diameter	Q_{max} in kg/h (lb/h)
DN 15 (½ in)	0 to 8,000 (0 to 17,637)
DN 25 (1 in)	0 to 35,000 (0 to 77,162)
DN 50 (2 in)	0 to 90,000 (0 to 198,416)
DN 80 (3 in)	0 to 250,000 (0 to 551,156)
DN 100 (4 in)	0 to 520,000 (0 to 1,146,404)
DN 150 (6 in)	0 to 860,000 (0 to 1,895,975)

Recommended flow range

Fluids:

- The recommended flow range is 5 to 100 % of Q_{max}.
- Flow rates < 1 % of Q_{max} should be avoided.

Gases:

- The flow velocity of gases in the meter tube should not up-scale 0.3 mach [approx. 100 m/s (328 ft/s)].
- Increased deviation in repeatability should be expected from a flow velocity of approx. 80 m/s (262 ft/s).
- The maximum flow range of gases depends on the operating density. Appropriate dimensioning guidelines are available at www.abb.com/flow .

Measuring accuracy

Reference conditions

Calibration fluid	Water • Temperature: 25 °C (77 °F) ± 5 K • Pressure: 2 to 4 bar (29 to 58 psi)
Ambient temperature	25 °C (77 °F) +10 K / −5 K
Power supply	Line voltage in accordance with name plate U_N ± 1 %
Warm-up phase	30 min
Installation	• Installation in accordance with **Assembly Notes** and **Mounting positions** • No visible gas phase • No external mechanical or hydraulic disturbances, particularly no cavitation
Output calibration	Pulse output

Measured error and repeatability

The measured error and repeatability are calculated as follows for the flow:

Scenario 1:

If

$$\text{Flow rate} \geq \frac{\text{Zero stability}}{(\text{base accuracy} / 100)}$$

Then:

- Maximum measured error:
  ± Base accuracy in % of measured value.
- Repeatability:
  ± 1/2 x base accuracy in % of measured value.

Scenario 2:

If

$$\text{Flow rate} < \frac{\text{Zero stability}}{(\text{base accuracy} / 100)}$$

Then:

- Maximum measured error:
  ± (zero stability / measured value) x 100% of measured value.
- Repeatability:
  ± ½ × (zero point stability / measured value) × 100% of measured value.

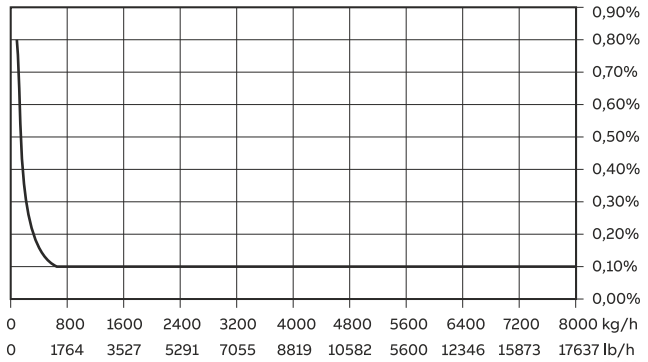

Figure 10: Measured error FCx150 DN 15 (example)

FCx150			
Measurement dynamic	**Flow rate**	**Measured error***	**Repeatability***
100:1	80 kg/h (176.4 lb/h)	≤ 0.8 %	0.4 %
50:1	160 kg/h (352.7 lb/h)	≤ 0.4 %	0.2 %
10:1	800 kg/h (1763.7 lb/h)	≤ 0.1 %	0.05 %
2:1	4000 kg/h (8818.5 lb/h)	≤ 0.1 %	0.05 %
1:1	8000 kg/h (17637 lb/h)	≤ 0.1 %	0.05 %

* Enter measured error and repeatability as % of measured value

Measured error and base accuracy for liquids		
	FCx130	**FCx150**
Order code flow calibration	A, B, E, J, K, N	C, D, L, M
Order code density calibration	1	3, 4, 5
Mass flow*	± 0.5% ± 0.4% ± 0.25% ± 0.2%	± 0.15% ± 0.1%
Volume flow*	±0.4 % ± 0.25% ± 0.2%	± 0.15% ± 0.11%
Density	0.010 kg/l**	0.002 kg/l** 0.001 kg/l** 0.0004 kg/l**
Repeatability for flow rate	Refer to page 15.	
Repeatability for density	0.002 kg/l**	0.002 kg/l** 0.001 kg/l** 0.0004 kg/l**
Temperature	1K	0.5 K

Measured error and base accuracy for gases		
	FCx130	**FCx150**
Order code flow calibration	A, B, E, J, K, N	C, D, L, M
Mass flow*	± 1%	± 0.5%
Temperature	1K	0.5 K

* Enter measured error and base accuracy as % of measured value

** For the density range from 0.5 to 1.8 kg/dm³

Zero stability

Nominal diameter	FCx130	FCx150
Order code flow calibration	A, B, E, J, K, N	C, D, L, M
Order code density calibration	1	3, 4
DN 15 (½ in)	0.64 kg/h (1.41 lb/h)	
DN 25 (1 in)	2.16 kg/h (4.76 lb/h)	
DN 50 (2 in)	7.20 kg/h (15.87 lb/h)	
DN 80 (3 in)	20 kg/h (44 lb/h)	
DN 100 (4 in)	41.6 kg/h (91.7 lb/h)	
DN 150 (6 in)	68.8 kg/h (151.68 lb/h)	

Effect of the measuring medium temperature

	FCx130	FCx150
Order code flow calibration	A, B, E, J, K, N	C, D, L, M
Order code density calibration	1	3, 4
On flow rate	< ±0.005 % of Q_{max} / 1 K	< ±0.0015 % of Q_{max} / 1 K
On density	< 0.0001 kg/dm³ per 1 K	

Effect of the operating pressure

Nominal diameter	Flow*	Density [kg/dm³ / bar]
DN 15 (½ in)	-0.002 %	No effect
DN 25 (1 in)	-0.013 %	0.00035
DN 50 (2 in)	-0.010 %	0.00027
DN 80 (3 in)	-0.006 %	0.00019
DN 100 (4 in)	-0.009 %	0.00024
DN 150 (6 in)	-0.035 %	0.00045

* Influence of operating pressure as % of measured value per bar

… Flowmeter sensor

Specifications

Pressure loss

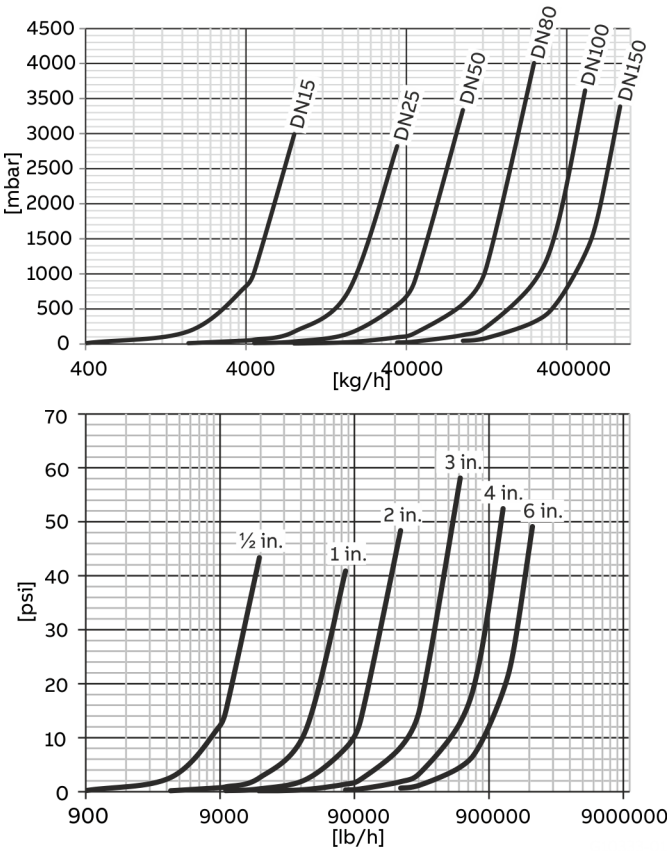

Figure 11: Pressure loss curve (measured with water, viscosity: 1 mPas)

Viscosity range

For dynamic viscosities ≥ 1 Pas (1000 mPas = 1000 cP), please consult ABB.

Temperature limits °C (°F)

Note

When using the device in potentially explosive atmospheres, note the additional temperature data in **Temperature data** on page 48!

Measuring medium temperature T_{medium}

FCx130: −50 to 160 °C (-58 to 320 °F)
FCx150: −50 to 205 °C (-58 to 401 °F)

Ambient temperature $T_{amb.}$

−40 to 70 °C (−40 to 158 °F)

Note

In devices with order code '**Extended tower length – TE3**', from an ambient temperature of ≥ 65 °C (149 °F), the measuring medium temperature must be limited to a maximum of 140 °C (284 °F).

Process connections

For an overview of available process connection versions, see **Overview – models** on page 3.

Pressure ratings

The maximum permissible operating pressure is determined by the respective process connection, the temperature of the medium to be measured, the screws, and the gasket material.
For an overview of available pressure ratings, see **Overview – models** on page 3.

Pressure Equipment Directive

Conformity assessment in accordance with Category III, fluid group 1, gas The pressure equipment is designed for load changes in accordance with the AD2000 specification sheet S1 Chapter 1.4 a) and b).
Note the corrosion resistance of the meter tube materials in relation to the measuring medium.

IP rating

In accordance with EN60529: IP65 / IP67 / IP68, NEMA 4X

Note

The flowmeter sensor is approved for an immersion depth up to 5 m (16.4 ft) in accordance with IP rating IP68.

Installation lengths in accordance with NAMUR standards

The CoriolisMaster FCB100, FCH100 is the ideal device for use in accordance with NAMUR standards. While also conforming to other standards, the device can be ordered with installation lengths in accordance with NAMUR standards (order code **'Process connection – S5 / S7'**.

The exact installation lengths can be found in the tables in **Devices DN 15 to 150 (½ to 6 in) in NAMUR standard installation lengths (order option S5, S7)** on page 33.

Meter tube inside diameter

Inside diameter of the meter tube of the Coriolis mass flowmeter CoriolisMaster FCB100, FCH100.

Nominal diameter	Meter tube inside diameter
DN 15 (½ in)	2 × 8 mm (2 x 0.31 in)
DN 25 (1 in)	2 × 16 mm (2 x 0.63 in)
DN 50 (2 in)	2 × 23.7 mm (2 x 0.93 in)
DN 80 (3 in)	2 × 36.62 mm (2 x 1.44 in)
DN 100 (4 in)	2 × 52.51 mm (2 x 2.07 in)
DN 150 (6 in)	2 × 68.9 mm (2 x 2.71 in)

Materials for the transmitter terminal box

Housing

- Aluminum EN AC-44200 (YL104)

or

- Stainless steel 1.4409 (ASTM CF3M)

Housing color (only for aluminum housing)

- RAL 9002

Layer thickness of the paint: 80 to 120 µm

Materials for the sensor

Wetted components

Stainless steel

- 1.4404 (AISI 316L)

Stainless steel, polished

- 1.4404 (AISI 316L) or 1.4435 (AISI 316L) certified in accordance with EHEDG with sensor material (AISI 316L)
- C4 nickel alloy* (2.4610) or C22 nickel alloy* (2.4602)

Optional: Manufacture in accordance with NACE MR0175 and MR0103 (ISO 15156)

Sensor housing**

Stainless steel 1.4404 (AISI 316L), 1.4301 (AISI 304), 1.4308 (ASTM CF8)

* Hastelloy® C is a registered trademark of Haynes International. C4 and C22 nickel alloys are equivalent to Hastelloy® C4 and Hastelloy® C22.

** If the wetted parts of the sensor are made from nickel alloy then parts of the sensor housing (splitter) are also manufactured from nickel alloy. However, the prevailing parts remain manufactured from the specified material.

Roughness for flanges in accordance with EN 1092-1, ASME and JIS

	EN 1092-1 B1	EN 1092-1 B2
Pressure rating	≤ PN 40	≥ PN 63
Mean roughness value Ra	3.2 to 12.5 µm	0.8 to 3.2 µm
Roughness depth Rz	12.5 to 50.0 µm	3.2 to 12.5 µm

	ASME B 16.5	JIS B 2220	JIS 10K
Mean roughness value Ra	0.8 to 3.2 µm	3.2 to 6.3 µm	3.2 to 6.3 µm
Roughness depth Rz	3.2 to 12.5 µm	12.5 to 25 µm	12.5 to 25 µm

… Flowmeter sensor

Material load for process connections

Note

You can reference the availability of the different process connections in the Online ABB Product Selection Assistant (PSA) for flow www.abb.com/flow-selector.

- Not all connections shown here are available in all the devices and designs.
- The permissible material load of the device can additionally differ from the material load of the connection. The permissible limit values (pressure rating / measuring medium temperature T_{medium}) can be found on the name plate.

Design	Nominal diameter	PS_{max}	TS_{max}	TS_{min}
Pipe fitting	DN 15 to DN 40	40 bar	140 °C	−40 °C
(DIN 11851)	(½ to 1½ in)	(580 psi)	(284 °F)	(−40 °F)
	DN 50 to DN 100	25 bar	140 °C	−40 °C
	(2 to 4 in)	(363 psi)	(284 °F)	(−40 °F)
Pipe fitting	DN 25 to DN 80	6 bar	140 °C	−40 °C
(SMS 1145)	(1 to 3 in)	(87 psi)	(284 °F)	(−40 °F)
Tri-Clamp	DN 15 to DN 50	16 bar	140 °C	−40 °C
(DIN 32676)	(½ to 2 in)	(232 psi)	(284 °F)	(−40 °F)
	DN 65 to DN 100	10 bar	140 °C	−40 °C
	(2½ to 4 in)	(145 psi)	(284 °F)	(−40 °F)
ASME BPE Clamp	< DN 80	11.4 bar	121 °C	−40 °C
	(< 3 in)	(165.3 psi)	(249,8 °F)	(−40 °F)
	DN 80	10.3 bar	121 °C	−40 °C
	(3 in)	(149.4 psi)	(249.8 °F)	(−40 °F)
	DN 100	8.6 bar	121 °C	−40 °C
	(4 in)	(124.7 psi)	(249.8 °F)	(−40 °F)
NPT female thread	DN 15 (½ in)	177 bar	150 °C	−40 °C
	CrNi steel 1.4404	(2567.2 psi)	(302 °F)	(−40 °F)
	DN 15 (½ in)	163 bar	205 °C	−40 °C
	CrNi steel 1.4404	(2364.1 psi)	(401 °F)	(−40 °F)
	DN 15 (½ in)	267 bar	150 °C	−40 °C
	HC22 2.4602	(3872.5 psi)	(302 °F)	(−40 °F)
	DN 15 (½ in)	243 bar	205 °C	−40 °C
	HC22 2.4602	(3524.4 psi)	(401 °F)	(−40 °F)

Material load curves for flange devices

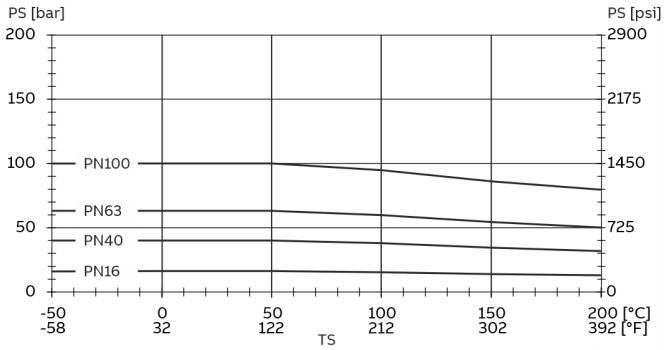

Figure 12: Stainless steel DIN flange 1.4404 (316L) up to DN 200 (8 in.)

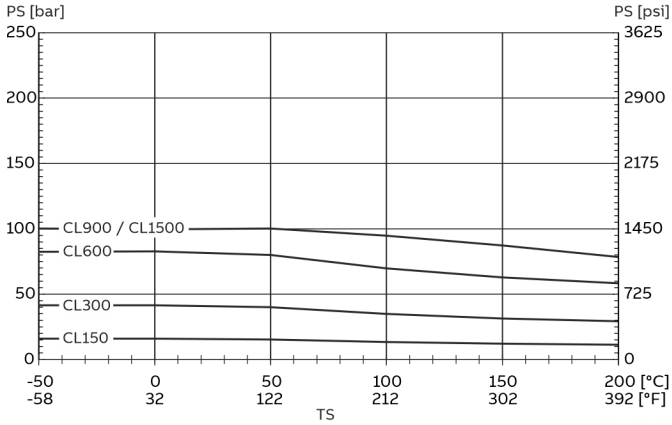

Figure 13: Stainless steel ASME flange 1.4404 (316L) up to DN 200 (8 in.)

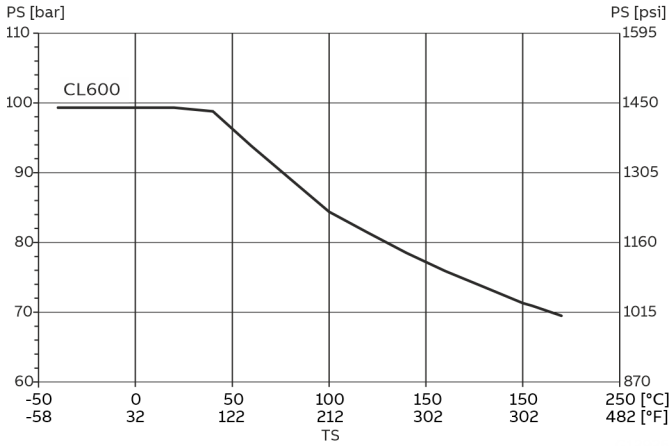

PS bar (psi)	TS °C (°F)	PS bar (psi)	TS °C (°F)
99.3 (1440.2)	−40 (−40)	81.4 (1.180.6)	120 (248)
99.3 (1440.2)	0 (32)	78.5 (1138.5)	140 (284)
99.3 (1440.2)	20 (68)	75.9 (1100.8)	160 (320)
99.8 (1447.5)	40 (104)	73.6 (1067.5)	180 (356)
93.8 (1360.5)	60 (140)	71.3 (1034.1)	200 (392)
89.1 (1292.3)	80 (176)	70.9 (1028.3)	205 (401)
84.4 (1224.1)	100 (212)	69.5 (1008.0)	220 (428)

Figure 14: Stainless steel ASME flange 1.4401 (F316) up to DN 200 (8 in.)

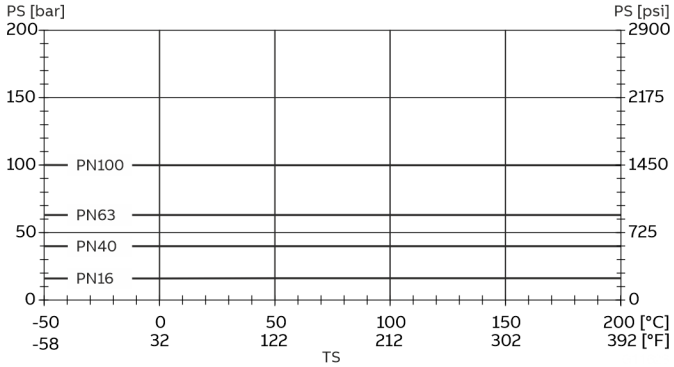

Figure 15: Nickel alloy DIN flange up to DN 200 (8 in)

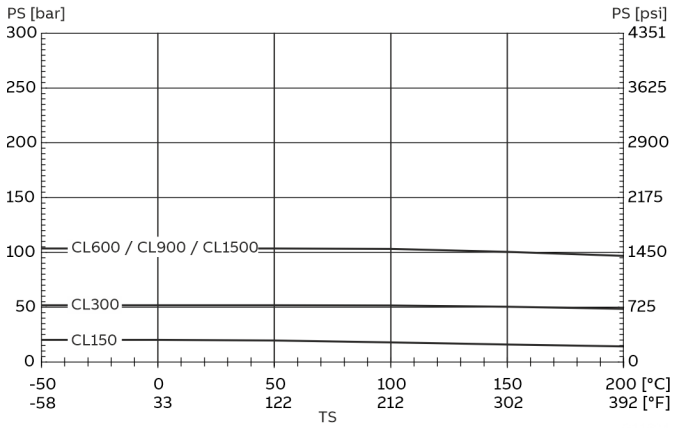

Figure 16: Nickel alloy ASME flange up to DN 200 (in.)

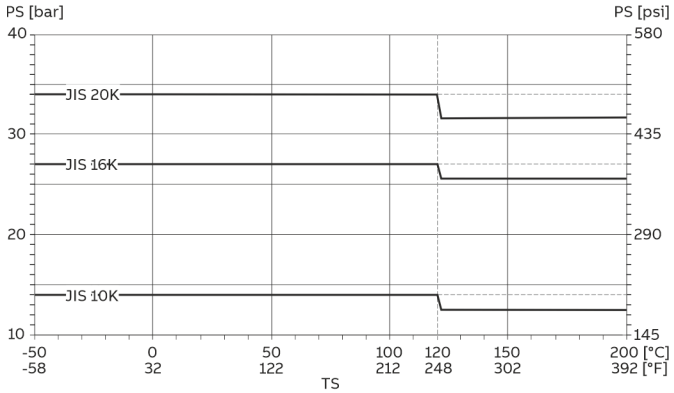

Figure 17: Stainless steel JIS B2220 flange 1.4435 or 1.4404 (AISI 316L) or nickel alloy

Electrical connections

Models FCB130, FCB150, FCH130 and FCH150

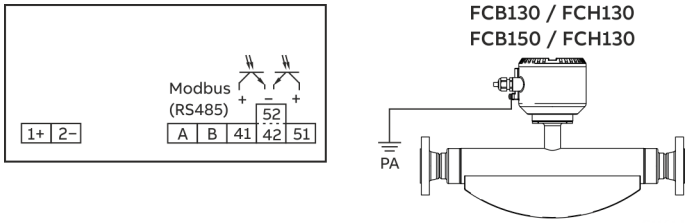

PA Potential equalization

Figure 18: Electrical connection

Connections for the power supply

DC voltage	
Terminal	**Function / comments**
1+	+
2–	–

Connections for the outputs

Terminal	**Function / comments**
A / B	**Modbus® RTU (RS485)**
41 / 42	**Passive digital output DO1** The output can be configured as a pulse output, frequency output or switch output.
51 / 52	**Passive digital output DO2** The output can be configured as a pulse output or switch output.

... Flowmeter sensor

... Electrical connections

Electrical data for inputs and outputs

Note

When using the device in potentially explosive atmospheres, note the additional connection data in **Use in potentially explosive atmospheres** on page 46!

Power supply

Supply voltage	11 to 30 V DC (ripple: ≤ 5 %)
Power consumption	S ≤ 5 VA

When connecting the devices, note the voltage drop on the cable. The operating voltage on the device must not be less than 11 V.

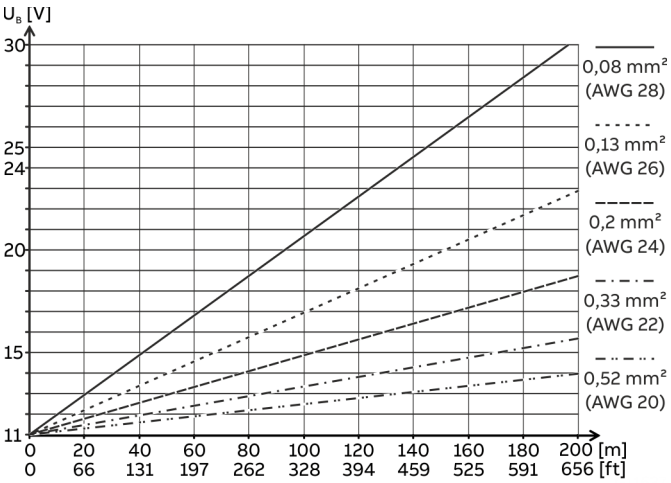

U_B Supply voltage L Cable length

Figure 19: Maximum cable lengths (examples)

Digital output 41 / 42, 51 / 52

Can be configured via Modbus.

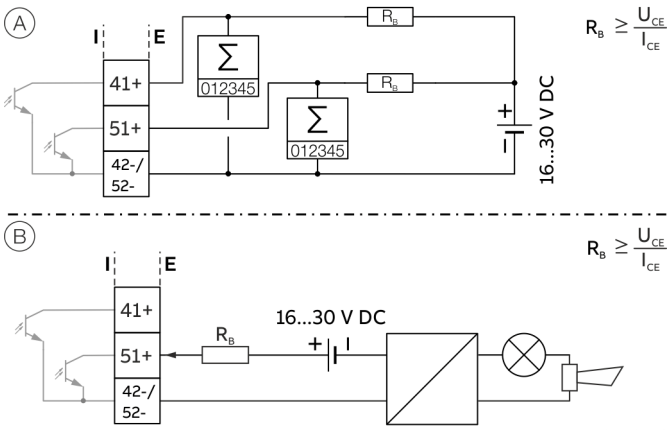

(A) Passive digital output 41 / 42 as pulse or frequency output, Passive digital output 51 / 52 as pulse output

(B) Passive digital output 51 / 52 as binary output

Figure 20: Passive digital outputs (I = internal, E = external)

Pulse / frequency output (passive)	
Terminals	41 / 42 (pulse / frequency output) 51 / 52 (pulse output)
Output 'closed'	$0\ V \leq U_{CEL} \leq 3\ V$ For f < 2.5 kHz: $2\ mA < I_{CEL} < 30\ mA$ For f > 2.5 kHz: $10\ mA < I_{CEL} < 30\ mA$
Output 'open'	$16\ V \leq U_{CEH} \leq 30\ V\ DC$ $0\ mA \leq I_{CEH} \leq 0.2\ mA$
f_{max}	10.5 kHz
Pulse width	0.1 to 2000 ms

Binary output (passive)	
Terminals	41 / 42, 51 / 52
Output 'closed'	$0\ V \leq U_{CEL} \leq 3\ V$ $2\ mA \leq I_{CEL} \leq 30\ mA$
Output 'open'	$16\ V \leq U_{CEH} \leq 30\ V\ DC$ $0\ mA \leq I_{CEH} \leq 0.2\ mA$
Switching function	Configurable

Note

- Digital output 51 / 52 **cannot** be configured as a frequency output.
- Terminals 42 / 52 have the same potential. Digital outputs 41 / 42 and 51 / 52 are not electrically isolated from each other.
- If you are using a mechanical counter, we recommend setting a pulse width of ≥ 30 ms and a maximum frequency of f_{max} ≤ 3 kHz.

Digital communication

Modbus® communication

Note

The Modbus® protocol is an unsecured protocol (in terms of IT and cyber security), as such the intended application should be assessed to ensure that this protocol is suitable before implementation.

Modbus is an open standard owned and administrated by an independent group of device manufacturers styled the Modbus Organization (www.modbus.org/).
Using the Modbus protocol allows devices made by different manufacturers to exchange information via the same communication bus, without the need for any special interface devices to be used.

Modbus protocol	
Terminals	V1 / V2
Configuration	Via the Modbus interface or via the local operating interface in connection with a corresponding Device Type Manager (DTM)
Transmission	Modbus RTU - RS485 serial connection
Baud rate	2400, 4800, 9600, 19200, 38400, 56000, 57600, 115200 baud Factory setting: 9600 baud
Parity	None, even, odd Factory setting: odd
Stop bit	One, two Factory setting: One
IEEE format	Little endian (LSB first), Big endian (MSB first) Factory setting: Big endian Big Endian -> MSB first (default) Little Endian -> LSB first
Typical response time	< 100 ms
Response delay time	0 to 200 ms Factory setting: 10 ms

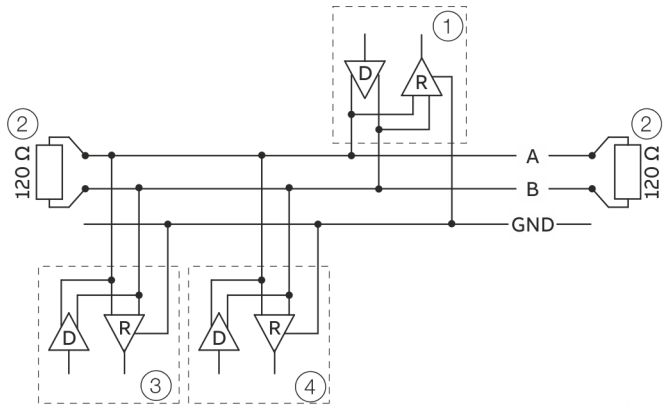

1 Modbus master
2 Terminating resistor
3 Modbus slave 1
4 Modbus slave n to 32

Figure 21: Communication via Modbus protocol

Cable specification

The maximum permissible length is dependent on the baud rate, the cable (diameter, capacity and surge impedance), the number of loads in the device chain, and the network configuration (2-core or 4-core).

- At a baud rate of 9600 and with a conductor cross-section of at least 0.14 mm^2 (AWG 26), the maximum length is 1000 m (3280 ft).
- When using a 4-core cable as a 2-wire wiring system, the maximum length must be halved.
- The spur lines must be short, a maximum of 20 m (66 ft).
- When using a distributor with 'n' connections, each branch must have a maximum length of 40 m (131 ft) divided by 'n.'

The maximum cable length depends on the type of cable used. The following standard values apply:

- Up to 6 m (20 ft):
  cable with standard shielding or twisted-pair cable.
- Up to 300 m (984 ft):
  double twisted-pair cable with overall foil shielding and integrated earth cable.
- Up to 1200 m (3937 ft):
  double twisted-pair cable with individual foil shielding and integrated earth cables. Example: Belden 9729 or equivalent cable.

A category 5 cable can be used for Modbus RS485 up to a maximum length of 600 m (1968 ft). For the symmetrical pairs in RS485 systems, a surge impedance of more than 100 Ω is preferred, especially at a baud rate of 19200 and above.

… Flowmeter sensor

Dimensions

Meter tube inside diameter

Inside diameter of the meter tube of the Coriolis mass flowmeter CoriolisMaster FCB100, FCH100.

Nominal diameter	Meter tube inside diameter
DN 15 (½ in)	2 × 8 mm (2 x 0.31 in)
DN 25 (1 in)	2 × 16 mm (2 x 0.63 in)
DN 50 (2 in)	2 × 23.7 mm (2 x 0.93 in)
DN 80 (3 in)	2 × 36.62 mm (2 x 1.44 in)
DN 100 (4 in)	2 × 52.51 mm (2 x 2.07 in)
DN 150 (6 in)	2 × 68.9 mm (2 x 2.71 in)

Devices with meter tube nominal DN 15 to 50 (½ to 2 in) and flange DN 10 to 65 (⅜ to 2½ in)

Sensor with wetted parts made from stainless steel.

All dimensions and weights are specified in mm (in) or kg (lb).

Standard Version

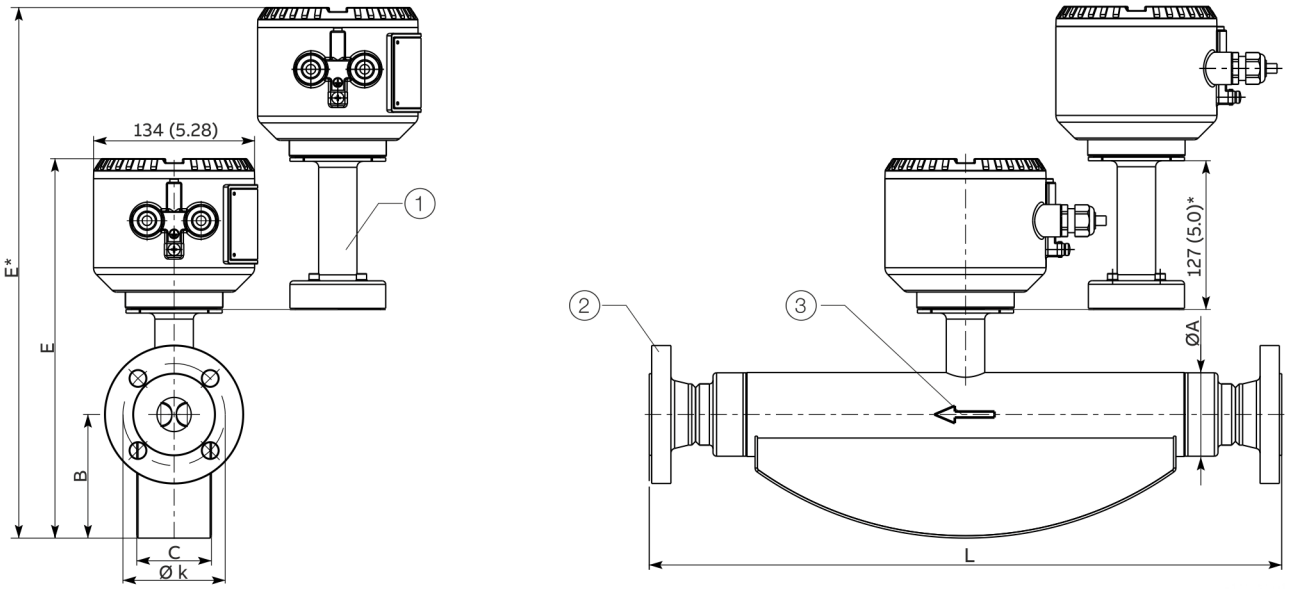

Marine version – CL1

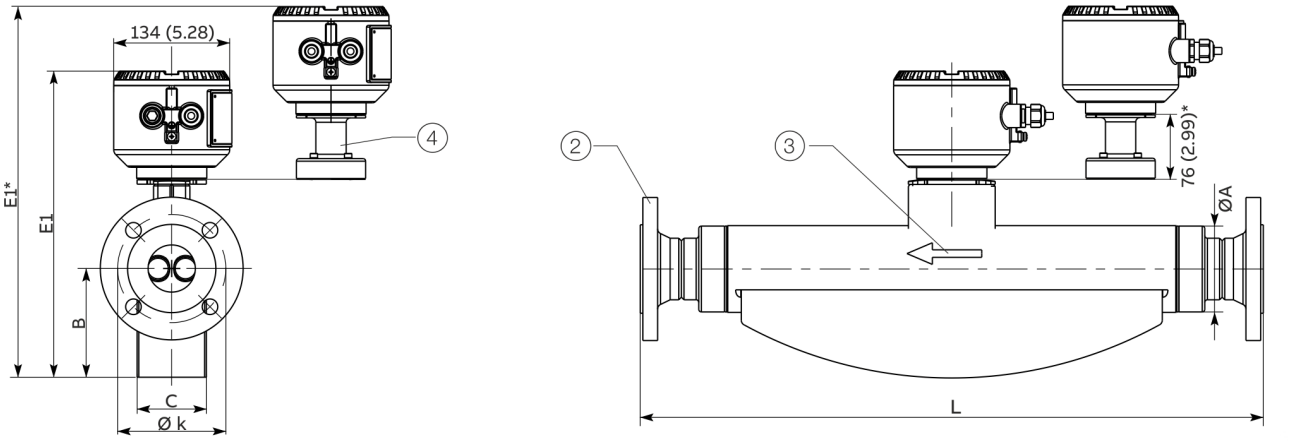

1. '**Extended tower length – TE1, TE2**' option or '**Burst pressure limits of the burst-proof sensor housing – PR5, PR6, PR7**' option
2. Flange in accordance with EN 1092-1, ASME B16.5, ISO 7005 (connection dimensions for ASME flanges in accordance with ASME B16.5 (ANSI))
3. Flow direction
4. '**Extended tower length – TE3**' option

* Standard design: Devices with '**Extended tower length – TE1, TE2**' option or '**Burst pressure limits of the burst-proof sensor housing – PR5, PR6, PR7**' option

** Marine version – CL1: Devices with '**Extended tower length – TE3**' option

Figure 1: Remote mount design

… Flowmeter sensor

… Dimensions

Meter tube nominal diameter DN 15 (½ in)									
DN / process connection		**L**	**Ø k**	**Ø A**	**B**	**C**	**E**	**E1**	**Weight max.**
10 (⅜ in)	PN 40 (EN 1092-1 B1)	385 (15.2)	60 (2.4)	44.5 (1.8)	80 (3.2)	49 (1.93)	283 (11.1) 410* (16.1*)	283 (11.1) 357** (14.1**)	13 (28.7)
	JIS 10K	385 (15.2)	65 (2.6)						
	JIS 16K	385 (15.2)	65 (2.6)						
	JIS 20K	385 (15.2)	65 (2.6)						
15 (½ in)	PN 40 (EN 1092-1 B1)	385 (15.2)	65 (2.6)						
	PN 63 (EN 1092-1 B2)	403 (15.9)	75 (3.0)						
	PN 100 (EN 1092-1 B2)								
	CL150 (ASME B16.5)	435 (17.1)	60.5 (2.4)						
	CL300 (ASME B16.5)	421 (16.6)	66.5 (2.6)						
	CL600 (ASME B16.5)								
	CL900 (ASME B16.5)	421 (16.6)	82.6 (3.3)						
	CL1500 (ASME B16.5)								
	JIS 10K	385 (15.2)	70 (2.8)						
	JIS 16K	385 (15.2)	70 (2.8)						
	JIS 20K	385 (15.2)	70 (2.8)						
20 (¾ in)	PN 40 (EN 1092-1 B1)	421 (16.6)	75 (3.0)						
	CL150 (ASME B16.5)	421 (16.6)	69.9 (2.8)						
	JIS 10K	421 (16.6)	75 (3.0)						
	JIS 16K	421 (16.6)	75 (3.0)						
	JIS 20K	421 (16.6)	75 (3.0)						

* Standard design: Devices with '**Extended tower length – TE1, TE2**' option or '**Burst pressure limits of the burst-proof sensor housing – PR5, PR6, PR7**' option

** Marine version – CL1: Devices with '**Extended tower length – TE3**' option

Meter tube nominal diameter DN 25 (1 in)									
DN / process connection		**L**	**Ø k**	**Ø A**	**B**	**C**	**E**	**E1**	**Weight max.**
20 (¾ in)	PN 40 (EN 1092-1 B1)	576 (22.7)	75 (3.0)	69.5 (2.74)	103 (4.06)	62 (2.44)	324 (12.8)	324 (12.8)	15 (33.1)[1]
	CL150 (ASME B16.5)	575 (22.6)	69.9 (2.8)				451* (17.8*)	398** (15.7**)	
	JIS 10K	576 (22.7)	75 (3.0)						
	JIS 16K	576 (22.7)	75 (3.0)						
	JIS 20K	576 (22.7)	75 (3.0)						
25 (1 in)	PN 40 (EN 1092-1 B1)	525 (20.7)	85 (3.3)						
	PN 63 (EN 1092-1 B2) PN 100 (EN 1092-1 B2)	564 (22.2)	100 (3.9)						
	CL150 (ASME B16.5)	575 (22.6)	79.2 (3.1)						
	CL300 (ASME B16.5) CL600 (ASME B16.5)	576 (22.7)	88.9 (3.5)						
	CL900 (ASME B16.5) CL1500 (ASME B16.5)	576 (22.7)	101.6 (4.0)						
	JIS 10K	525 (20.7)	90 (3.54)						
	JIS 16K	525 (20.7)	90 (3.54)						
	JIS 20K	525 (20.7)	90 (3.54)						
40 (1½ in)	PN 40 (EN 1092-1 B1)	576 (22.7)	110 (4.33)						
	PN 63 (EN 1092-1 B2) PN 100 (EN 1092-1 B2)	572 (22.5)	125 (4.92)						
	CL150 (ASME B16.5)	576 (22.7)	98.6 (3.88)						
	CL300 (ASME B16.5) CL600 (ASME B16.5)	576 (22.7)	114.3 (45.0)						
	JIS 10K	576 (22.7)	105 (4.13)						
	JIS 16K	576 (22.7)	105 (4.13)						
	JIS 20K	576 (22.7)	105 (4.13)						

* Standard design: Devices with '**Extended tower length – TE1, TE2**' option or '**Burst pressure limits of the burst-proof sensor housing – PR5, PR6, PR7**' option

** Marine version – CL1: Devices with '**Extended tower length – TE3**' option

L dimension tolerance: +0 / −3 mm (+0 / −0.118 in)

… Flowmeter sensor

… Dimensions

Meter tube nominal diameter DN 50 (2 in)									
DN / process connection		**L**	**Ø k**	**Ø A**	**B**	**C**	**E**	**E1**	**Weight max.**
40 (1½ in)	PN 40 (EN 1092-1 B1)	763 (30)	110 (4.33)	99 (3.9)	126 (4.96)	80 (3.15)	354 (13.9)	354 (13.9)	31 (68.3)
	PN 63 (EN 1092-1 B2)	745 (29.33)	125 (4.92)				481* (18.94*)	428** (16.9**)	
	PN 100 (EN 1092-1 B2)								
	CL150 (ASME B16.5)	763 (30)	98.6 (3.88)						
	CL300 (ASME B16.5)	756 (29.76)	114.3 (4.5)						
	CL600 (ASME B16.5)								
	CL900 (ASME B16.5)	780 (30.71)	124 (4.88)						
	CL1500 (ASME B16.5)								
	JIS 10K	763 (30)	105 (4.13)						
	JIS 16K	763 (30)	105 (4.13)						
	JIS 20K	763 (30)	105 (4.13)						
50 (2 in)	PN 40 (EN 1092-1 B1)	715 (28.15)	125 (4.92)						
	PN 63 (EN 1092-1 B2)	745 (29.3)	135 (5.31)						
	PN 100 (EN 1092-1 B2)	745 (29.33)	145 (5.71)						
	CL150 (ASME B16.5)	715 (28.15)	120.7 (4.75)						
	CL300 (ASME B16.5)	763 (30)	127 (5.0)						
	CL600 (ASME B16.5)	773 (30.43)	127 (5.0)						
	CL900 (ASME B16.5)	790 (31.1)	165.1 (6.5)						
	CL1500 (ASME B16.5)								
	JIS 10K	715 (28.15)	120 (4.72)						
	JIS 16K	715 (28.15)	120 (4.72)						
	JIS 20K	715 (28.15)	120 (4.72)						
65 (2½ in)	PN 40 (EN 1092-1 B1)	763 (30)	145 (5.71)						
	CL150 (ASME B16.5)	756 (29.76)	139.7 (5.5)						
	CL900 (ASME B16.5)	800 (31.5)	190.5 (7.5)						
	CL1500 (ASME B16.5)								
	JIS 10K	763 (30)	140 (5.51)						
	JIS 16K	763 (30)	140 (5.51)						
	JIS 20K	763 (30)	140 (5.51)						

* Standard design: Devices with '**Extended tower length – TE1, TE2**' option or '**Burst pressure limits of the burst-proof sensor housing – PR5, PR6, PR7**' option

** Marine version – CL1: Devices with '**Extended tower length – TE3**' option

L dimension tolerance: +0 / −3 mm (+0 / −0.118 in)

Devices with meter tube nominal diameter DN 80 (3 in) and flange DN 65 to 100 (2½ to 4 in)

Sensor with wetted parts made from stainless steel.

All dimensions and weights are specified in mm (in) or kg (lb).

Standard Version

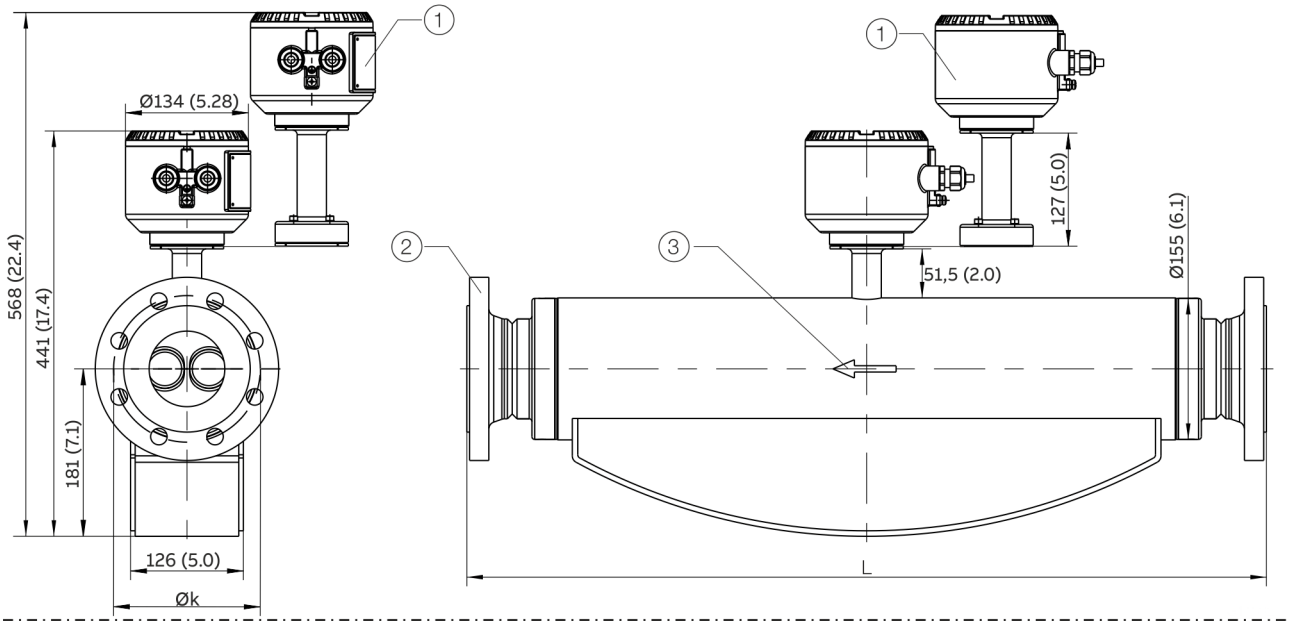

Marine version – CL1

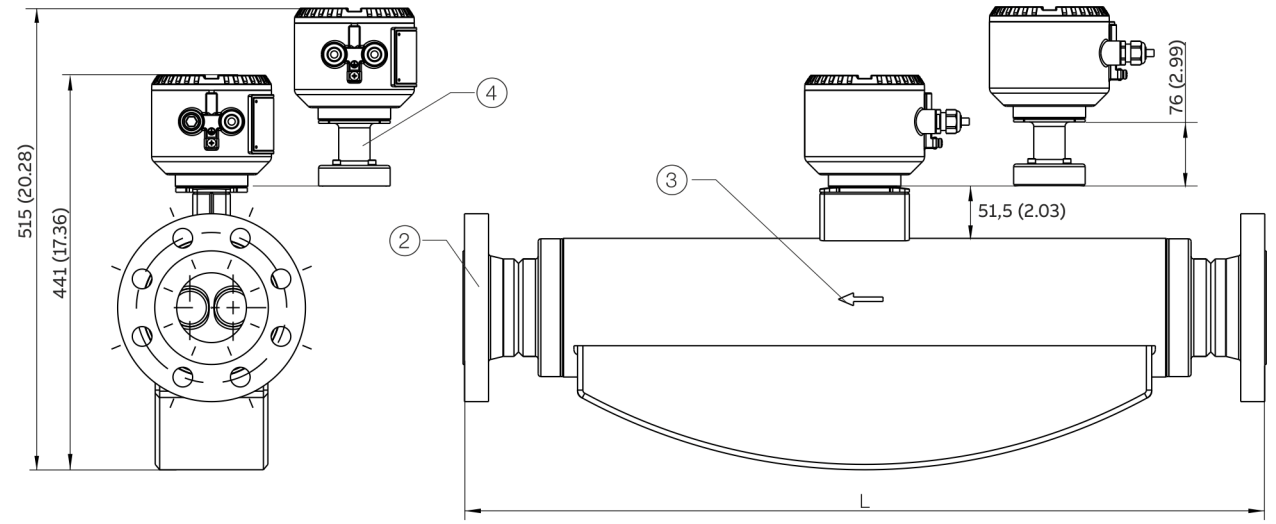

1. '**Extended tower length – TE1, TE2**' option or '**Burst pressure limits of the burst-proof sensor housing – PR5, PR6, PR7**' option
2. Flange in accordance with EN 1092-1, ASME B16.5, ISO 7005 (connection dimensions for ASME flanges in accordance with ASME B16.5 (ANSI))
3. Flow direction
4. '**Extended tower length – TE3**' option

Figure 2: Remote mount design

… Flowmeter sensor

… Dimensions

Meter tube nominal diameter DN 80 (3 in)				
DN / process connection		**L**	**Ø k**	**Weight max.**
65 (2½ in)	PN 16 (EN 1092-1 B1)	–*	–*	–*
	PN 40 (EN 1092-1 B1)	910 (35.83)	145 (5.71)	74 (163.1)
	PN 63 (EN 1092-1 B2)		160 (6.3)	78 (172.0)
	PN 100 (EN 1092-1 B2)		170 (6.69)	82 (180.8)
	CL150 (ASME B16.5)	920 (36.22)	123 (4.48)	74 (163.1)
	CL300 (ASME B16.5)	920 (36.22)	149.4 (5.88)	76 (167.6)
	CL600 (ASME B16.5)			77 (169.8)
	CL900 (ASME B16.5)	965 (37.99)	190.5 (7.5)	94 (207.2)
	CL1500 (ASME B16.5)			
	JIS 10K	910 (35.83)	140 (5.5)	74 (163.1)
	JIS 16K	910 (35.83)	140 (5.5)	74 (163.1)
	JIS 20K	920 (36.22)	140 (5.5)	74 (163.1)
80 (3 in)	PN 16 (EN 1092-1 B1)	870 (34.25)	160 (6.30)	74 (163.1)
	PN 40 (EN 1092-1 B1)			75 (165.4)
	PN 63 (EN 1092-1 B2)	910 (35.83)	170 (6.69)	79 (174.2)
	PN 100 (EN 1092-1 B2)		180 (7.09)	85 (187.4)
	CL150 (ASME B16.5)	880 (34.65)	152.4 (6.00)	76 (165.4)
	CL300 (ASME B16.5)	895 (35.24)	168.1 (6.62)	79 (174.2)
	CL600 (ASME B16.5)	920 (36.22)		82 (180.8)
	CL900 (ASME B16.5)	1100 (43.31) [1)]	190.5 (7.50)	94 (207.2)
	CL1500 (ASME B16.5)	1300 (51.18) [1)]	203.2 (8.00)	106 (233.7)
	JIS 10K	870 (34.25)	150 (5.91)	75 (165.4)
	JIS 16K	870 (34.25)	150 (5.91)	75 (165.4)
	JIS 20K	910 (35.83)	150 (5.91)	75 (165.4)
100 (4 in)	PN 16 (EN 1092-1 B1)	875 (34.45)	180 (7.09)	75 (165.4)
	PN 40 (EN 1092-1 B1)		190 (7.48)	76 (167.5)
	PN 63 (EN 1092-1 B2)	1060 (41.73)	200 (7.87)	86 (189.6)
	PN 100 (EN 1092-1 B2)	1080 (42.52) [1)]	210 (8.27)	94 (207.2)
	CL150 (ASME B16.5)	880 (34.65)	190.5 (7.50)	77 (169.8)
	CL300 (ASME B16.5)	1075 (42.32) [1)]	200.2 (7.88)	91 (200.6)
	CL600 (ASME B16.5)	1100 (43.31) [1)]	215.9 (8.50)	101 (222.7)
	CL900 (ASME B16.5)	1130 (44.49) [1)]	234.9 (9.25)	111 (244.7)
	CL1500 (ASME B16.5)	1150 (45.28) [1)]	241.3 (9.50)	126 (277.8)
	JIS 10K	1060 (41.7) [1)]	175 (6.9)	86 (189.6)
	JIS 16K	1060 (41.7) [1)]	175 (6.9)	85 (187.4)
	JIS 20K	1060 (41.7) [1)]	175 (6.9)	85 (187.4)

* On request

L dimension tolerance:

+0 / −3 mm (+0 / −0.118 in)

1) +0 / −8 mm (+0 / −0.31 in)

Devices with meter tube nominal diameter DN 100 (4 in.) and flange DN 80 to 150 (3 to 6 in)

Sensor with wetted parts made from stainless steel.

All dimensions and weights are specified in mm (in) or kg (lb).

Standard Version

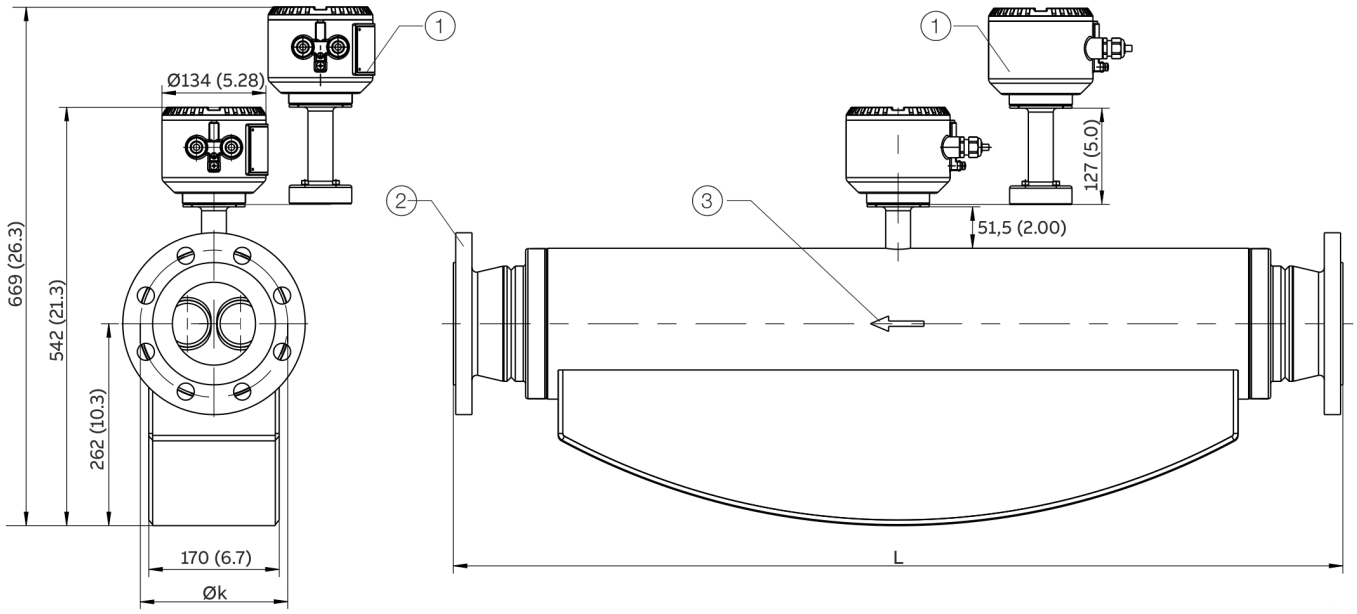

Marine version – CL1

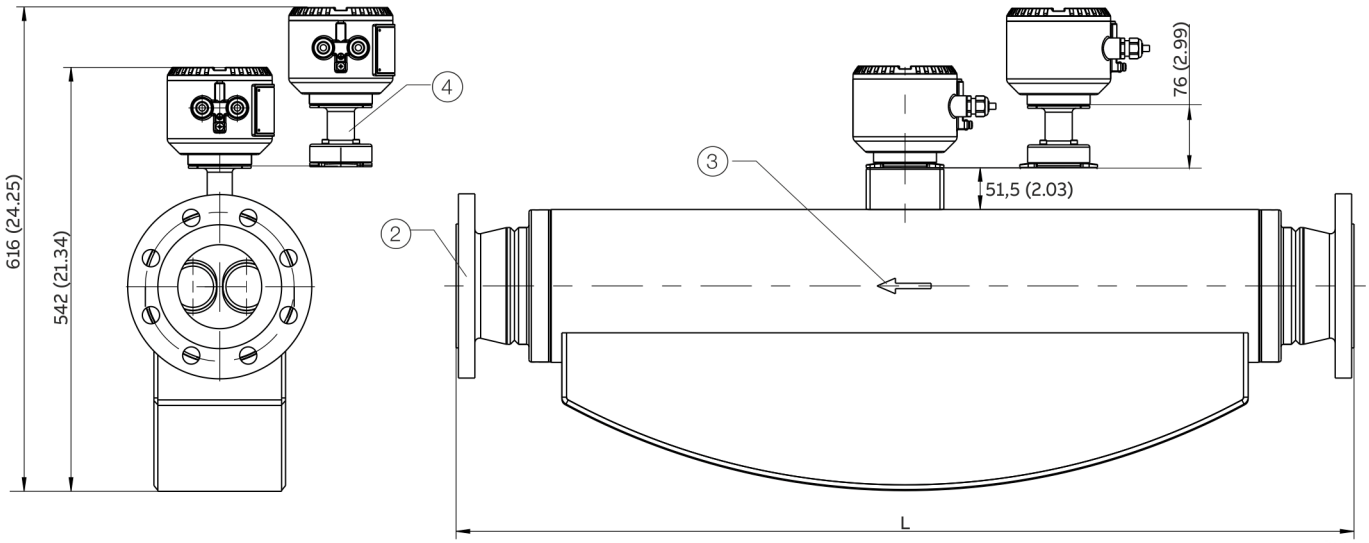

1. '**Extended tower length – TE1, TE2**' option or '**Burst pressure limits of the burst-proof sensor housing – PR5, PR6, PR7**' option.
2. Flange in accordance with EN 1092-1, ASME B16.5, ISO 7005 (connection dimensions for ASME flanges in accordance with ASME B16.5 (ANSI))
3. Flow direction
4. '**Extended tower length – TE3**' option

Figure 3: Remote mount design

… Flowmeter sensor

… Dimensions

Meter tube nominal diameter DN 100 (4 in)				
DN / process connection		**L**	**Ø k**	**Weight max.**
80 (3 in)	PN 16 (EN 1092-1 B1)	1222 (48.11) [1]	160 (6.30)	126 (278)
	PN 40 (EN 1092-1 B1)			126 (278)
	PN 63 (EN 1092-1 B2)	1234 (48.58) [1]	170 (6.69)	130 (287)
	PN 100 (EN 1092-1 B2)		180 (7.09)	132 (291)
	CL150 (ASME B16.5)	1244 (48.98) [1]	152.4 (6.00)	127 (280)
	CL300 (ASME B16.5)		168.1 (6.62)	135 (298)
	CL600 (ASME B16.5)		168.1 (6.62)	138 (304)
	CL900 (ASME B16.5)	1470 (57.87) [1]	190.5 (7.50)	141 (311)
	CL1500 (ASME B16.5)	1500 (59.05) [1]	203.2 (8.00)	153 (337)
	JIS 10K	1275 (50.20) [1]	150 (5.91)	123 (271)
	JIS 16K	1275 (50.20) [3]	150 (5.91)	123 (271)
	JIS 20K	1275 (50.20) [3]	150 (5.91)	123 (271)
100 (4 in)	PN 16 (EN 1092-1 B1)	1123 (44.21) [3]	180 (7.09)	123 (271)
	PN 40 (EN 1092-1 B1)	1146 (45.12) [2]	190 (7.48)	126 (278)
	PN 63 (EN 1092-1 B2)	1304 (51.34) [1]	138 (5.43)	133 (293)
	PN 100 (EN 1092-1 B2)	1334 (52.52) [1]	150 (5.91)	141 (311)
	CL150 (ASME B16.5)	1145 (45.08) [2]	190.5 (7.50)	127 (280)
	CL300 (ASME B16.5)	1320 (51.97) [2]	200.2 (7.88)	139 (306)
	CL600 (ASME B16.5)	1336 (52.60) [3]	215.9 (8.50)	141 (311)
	CL900 (ASME B16.5)	1380 (54.33) [1]	234.9 (9.25)	160 (353)
	CL1500 (ASME B16.5)	1400 (55.12) [1]	241.3 (9.50)	174 (384)
	JIS 10K	1150 (45.28) [1]	175 (6.89)	126 (278)
	JIS 16K	1150 (45.28) [1]	175 (6.89)	126 (278)
	JIS 20K	1150 (45.28) [1]	175 (6.89)	126 (278)
150 (6 in)	PN 16 (EN 1092-1 B1)	1255 (49.41) [2]	240 (9.44)	131 (289)
	PN 40 (EN 1092-1 B1)	1297 (51.06) [1]	250 (9.84)	139 (306)
	CL150 (ASME B16.5)	1252 (49.29) [3]	241.3 (9.50)	137 (302)
	CL600 (ASME B16.5)	1400 (55.12) [1]	–	–
	JIS 10K	1300 (51.18) [1]	240 (9.44)	130 (287)
	JIS 16K	1300 (51.18) [1]	240 (9.44)	130 (287)
	JIS 20K	1308 (51.50) [1]	240 (9.44)	130 (287)

L dimension tolerances

1) +0 / −10 mm (+0 / −0.39 in)
2) +0 / −5 mm (+0 / −0.20 in)
3) +0 / −8 mm (+0 / −0.31 in)

Devices with meter tube nominal diameter DN 150 (6 in) and flange DN 100 to DN 200 (4 to 8 in)

Sensor with wetted parts made from stainless steel.

All dimensions and weights are specified in mm (in) or kg (lb).

Standard Version

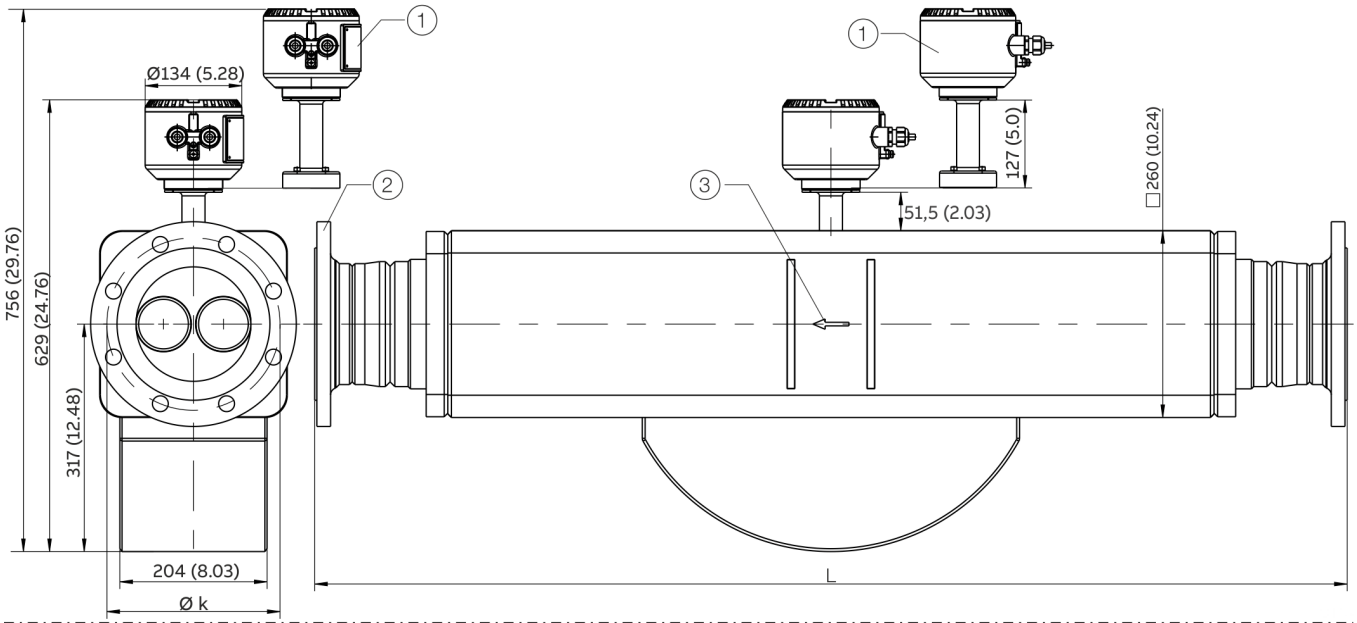

Marine version – CL1

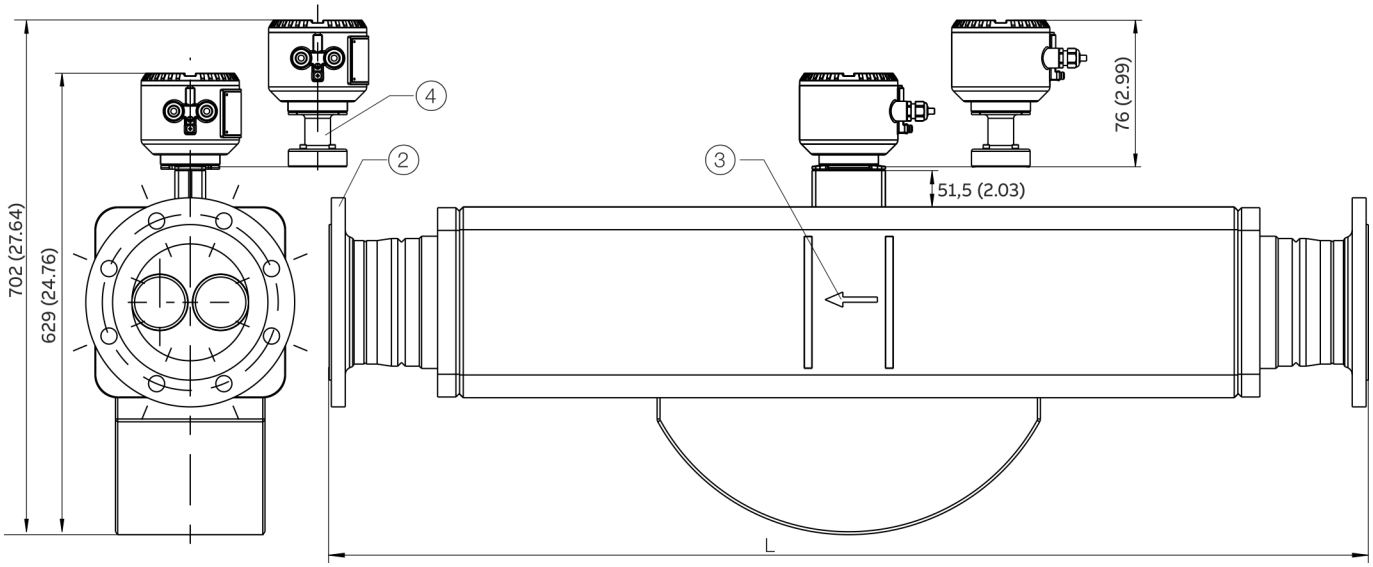

1. '**Extended tower length – TE1, TE2**' option or '**Burst pressure limits of the burst-proof sensor housing – PR5, PR6, PR7**' option
2. Flange in accordance with EN 1092-1, ASME B16.5, ISO 7005 (connection dimensions for ASME flanges in accordance with ASME B16.5 (ANSI))
3. Flow direction
4. '**Extended tower length – TE3**' option

Figure 4: Remote mount design

… Flowmeter sensor

… Dimensions

Meter tube nominal diameter DN 150 (6 in)				
DN / process connection		**L**	**Ø k**	**Weight max.**
100 (4 in)	PN 16 (EN 1092-1 B1)	1569 (61.77) [1]	180 (7.09)	175 (386)
	PN 40 (EN 1092-1 B1)	1599 (62.95) [1]	190 (7.48)	179 (395)
	CL150 (ASME B16.5)	1630 (64.17) [1]	190.5 (7.50)	182 (401)
	CL300 (ASME B16.5)	1650 (64.96) [1]	200.2 (7.88)	188 (414)
	CL600 (ASME B16.5)	1675 (65.94) [1]	215.9 (8.50)	198 (437)
	CL900 (ASME B16.5)	1705 (67.13) [1]	234.9 (9.25)	208 (459)
	CL1500 (ASME B16.5)	1725 (67.91) [1]	241.3 (9.50)	223 (492)
	JIS 10K	1485 (58.46) [1]	175 (6.89)	179 (395)
	JIS 16K	1485 (58.46) [1]	185 (7.28)	181 (399)
	JIS 20K	1485 (58.46) [1]	185 (7.28)	181 (399)
150 (6 in)	PN 16 (EN 1092-1 B1)	1421 (55.94) [1]	240 (9.45)	178 (392)
	PN 40 (EN 1092-1 B1)	1459 (57.44) [2]	250 (9.84)	186 (410)
	CL150 (ASME B16.5)	1482 (58.35) [2]	241.3 (9.50)	185 (408)
	CL300 (ASME B16.5)	1503 (59.17) [3]	269.7 (10.62)	203 (448)
	CL600 (ASME B16.5)	1555 (61.22) [3]	292.1 (11.50)	225 (496)
	CL900 (ASME B16.5)	1605 (63.19) [1]	317.5 (12.5)	249 (549)
	CL1500 (ASME B16.5)	1665 (65.55) [1]		291 (642)
	JIS 10K	1425 (56.10) [1]	240 (9.45)	186 (410)
	JIS 16K	1456 (57.32) [1]	260 (6.30)	187 (412)
	JIS 20K	1464 (57.64) [1]	260 (6.30)	187 (412)
200 (8 in)	PN 16 (EN 1092-1 B1)	–*	–*	–*
	PN 40 (EN 1092-1 B1)	1637 (64.45)	320 (12.6)	209 (461)
	CL150 (ASME B16.5)	1650 (64.96) [1]	298.5 (11.75)	204 (450)
	CL300 (ASME B16.5)	1664 (65.51) [3]	330.2 (13.0)	229 (505)
	CL600 (ASME B16.5)	1730 (68.11) [3]	–	–
	JIS10K	1583 (62.32) [2]	290 (11.42)	209 (461)
	JIS 16K	1615 (63.58) [1]	305 (12.01)	210 (463)
	JIS 20K	1623 (63.90) [1]	305 (12.01)	210 (463)

* On request

L dimension tolerances

1) +0 / −15 mm (+0 / −0.59 in)
2) +0 / −5 mm (+0 / −0.20 in)
3) +0 / −8 mm (+0 / −0.31 in)

Devices DN 15 to 150 (½ to 6 in) in NAMUR standard installation lengths (order option S5, S7)

Sensor with wetted parts made from stainless steel.

All dimensions and weights are specified in mm (in) or kg (lb).

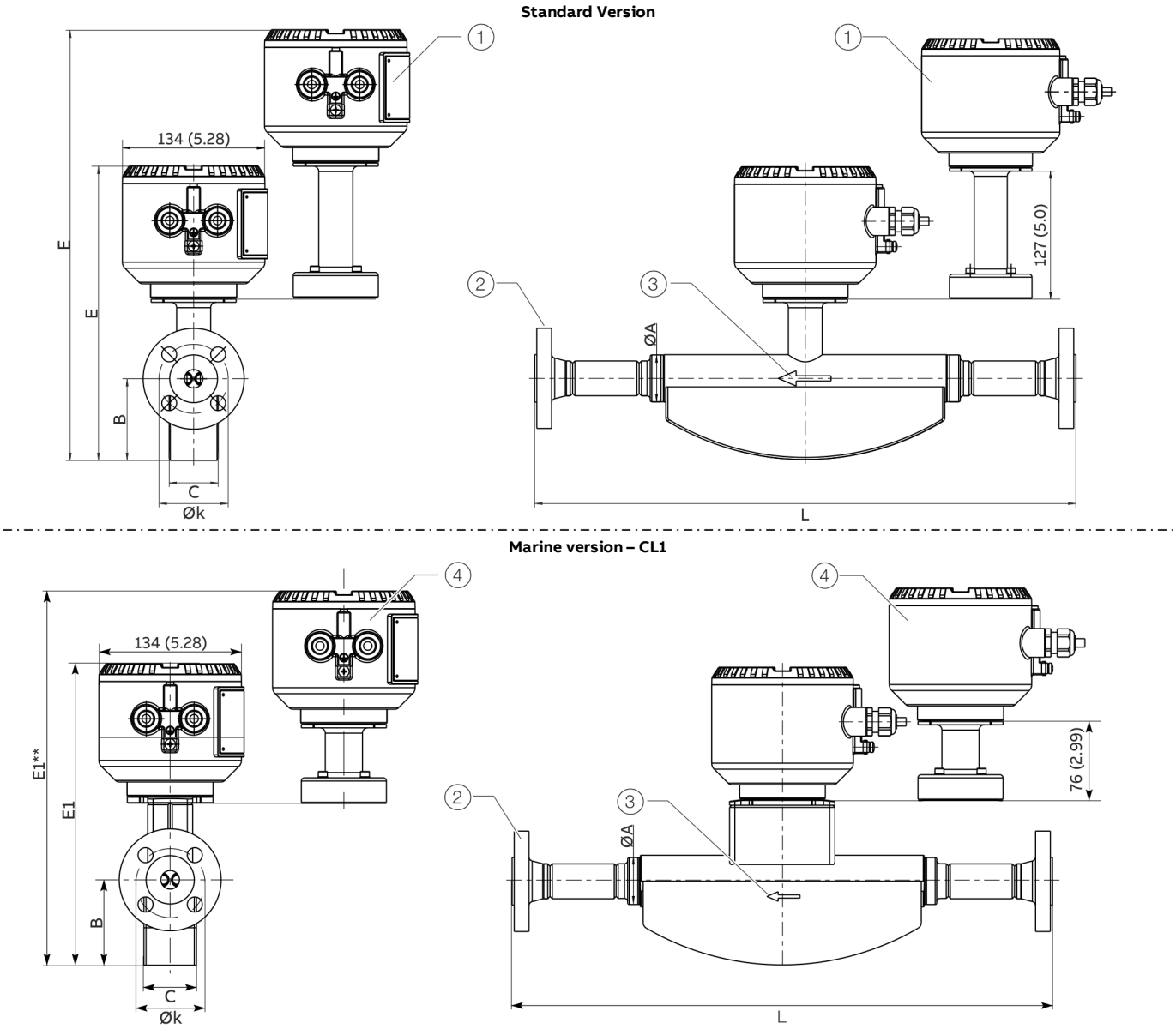

① '**Extended tower length – TE1, TE2**' option or '**Burst pressure limits of the burst-proof sensor housing – PR5, PR6, PR7**' option

② Flange in accordance with EN 1092-1

③ Flow direction

④ '**Extended tower length – TE3**' option

* Standard design: Devices with '**Extended tower length – TE1, TE2**' option or '**Burst pressure limits of the burst-proof sensor housing – PR5, PR6, PR7**' option

** Marine version – CL1: Devices with '**Extended tower length – TE3**' option

Figure 5: Remote mount design

… Flowmeter sensor

… Dimensions

Devices DN 15 to 150 in NAMUR standard installation lengths

Meter tube	Process connection EN 1092-1 B1	L	Ø k	Ø A	B	C	E	E1	Approximate weight
DN 15 (½ in)	DN 15 (½ in) / PN 40	510 (20.08) [1]	60 (2.4)	44.5 (1.8)	77 (3.0)	46 (1.8)	283 (11.1) 410* (16.1*)	283 (11.1) 357** (14.1**)	13.5 (29.8)
DN 25 (1 in)	DN 25 (1 in) / PN 40	600 (23.62) [1]	75 (3.0)	69.5 (2.74)	103 (4.06)	62 (2.44)	324 (12.8) 451* (17.8*)	324 (12.8) 398** (15.7**)	15 (33.1)
DN 50 (1 in)	DN 50 (1 in) / PN 40	715 (28.15) [1]	125 (4.92)	99 (3.9)	125 (4.92)	80 (3.15)	354 (13.9) 481* (18.94*)	354 (13.9) 428** (16.9**)	31 (68.3)
DN 80 (3 in)	DN 80 (3 in) / PN 40	915 (36.02) [1]	160 (6.30)	155 (6.1)	183 (7.2)	123 (4.84)	445 (17.52) 572* (22.52*)	–	74 (163)
DN 100 (4 in)	DN 100 (4 in) / PN 16	1400 (55.12) [2]	180 (7.09)	195 (7.68)	261 (10.28)	168 (6.61)	541 (21.3) 668* (26.3*)	–	123 (271)
DN 150 (6 in)	DN 150 (6 in) / PN 16	1700 (66.93) [3]	240 (9.45)	260 (10.24)	320 (12.6)	205 (8.07)	630 (24.8) 757* (29.8*)	–	178 (392)

* Standard design: Devices with '**Extended tower length – TE1, TE2**' option or '**Burst pressure limits of the burst-proof sensor housing – PR5, PR6, PR7**' option

** Marine version – CL1: Devices with '**Extended tower length – TE3**' option

L dimension tolerances

1) +0 / −3 mm (+0 / −0.118 in)
2) +0 / −5 mm (+0 / −0.20 in)
3) +0 / −20 mm (+0 / −0.79 in)

Devices with meter tube nominal diameter DN 15 to 80 (½ to 3 in) and connections in accordance with SMS 1145, DIN 11851, DIN 32676, DIN ISO 228, ASME BPE, and ASME B 1.20.1

Sensor with wetted parts made from stainless steel.

All dimensions and weights are specified in mm (in) or kg (lb).

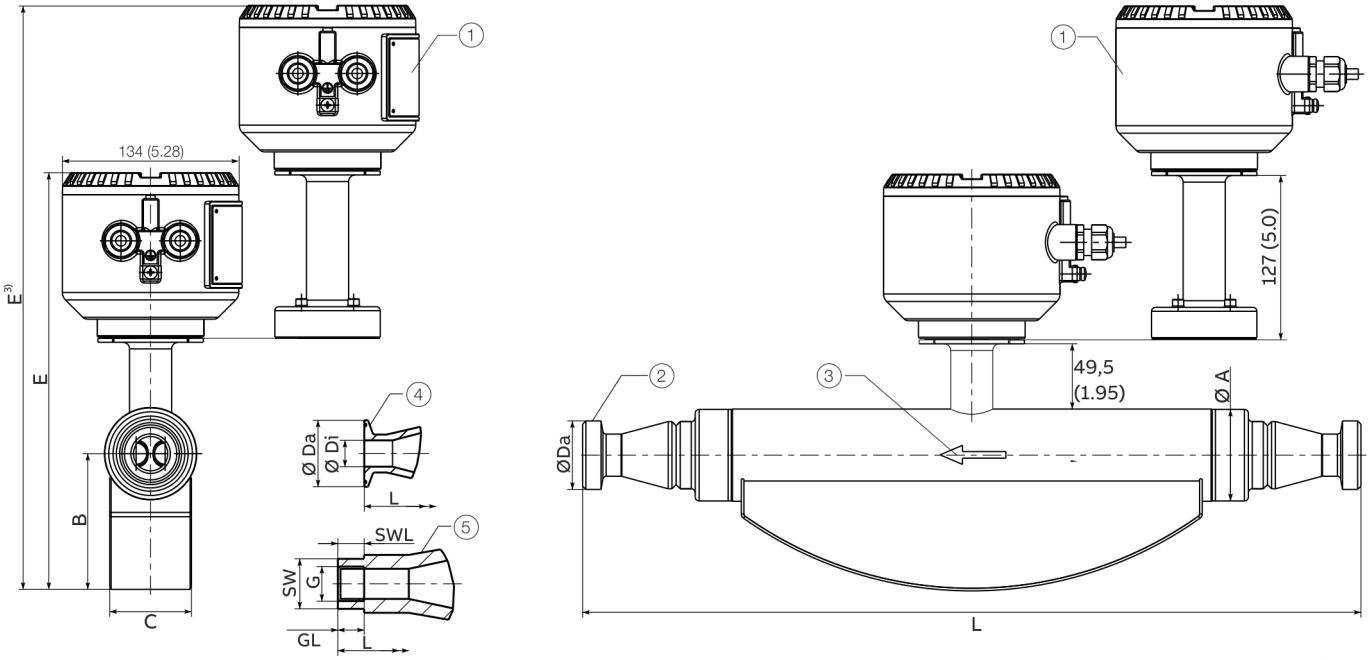

1. '**Extended tower length – TE1, TE2**' option or '**Burst pressure limits of the burst-proof sensor housing – PR5, PR6, PR7**' option
2. Threaded spuds in accordance with DIN 11851 and SMS 1145
3. Flow direction
4. Clamping connection in accordance with DIN 32676 and ASME BPE
5. Female thread connection in accordance with DIN ISO 228 and ASME B 1.20.1

Figure 6: Remote mount design

Process connection in accordance with SMS 1145 meter tube nominal diameter DN 25 to 80 (1 to 3 in)

Meter tube	Process connection		L	Ø DA	Ø Di	Ø A	B	C	E	Approximate weight	
DN	DN	PN								Aluminum*	Stainless steel**
25 (1 in)	25 (1 in)	6	590 (23.2)	RD 40x⅙ in	22.6 (0.89)	69.5	103	62	317 / 444***	11 / 12***	14 / 15***
	40 (1 ½ in)			RD 60x⅙ in	38 (1.50)	(2.74)	(4.06)	(2.44)	(12.48 / 17.48***)	(24 / 27***)	(31 / 33***)
50 (2 in)	40 (1 ½ in)	6	763 (30.0)	RD 60x⅙ in	35.5 (1.40)	99	125	80	354 / 481***	27 / 28***	30 / 31***
	50 (2 in)		740 (29.1)	RD 70x⅙ in	48.5 (1.91)	(3.46)	(4.92)	(3.15)	(13.94 / 18.94***)	(60 / 62***)	(66 / 68***)
	65 (2 ½ in)			RD 85x⅙ in	60.5 (2.38)						
80 (3 in)	65 (2 ½ in)		990 (39.0)	RD 85x⅙ in	60.5 (2.38)	155	183	123	445 / 572***	68 / 69***	71 / 72***
	80 (3 in)		940 (37.0)	RD 98x¼ in	72.6 (2.86)	(6.10)	(7.20)	(4.84)	(17.52 / 22.52***)	(150 / 152***)	(157 / 159***)

* Devices with terminal boxes made from aluminum.

** Devices with terminal boxes made from stainless steel.

*** Devices with '**Extended tower length – TE1, TE2**' option or '**Burst pressure limits of the burst-proof sensor housing – PR5, PR6, PR7**' option.

… Flowmeter sensor

… Dimensions

Process connection in accordance with DIN 11851 meter tube nominal diameter DN 15 to 80 (½ to 3 in.)

Meter tube	Process connection		L	Ø DA	Ø Di	Ø A	B	C	E	Approximate weight	
DN	DN	PN								Aluminum*	Stainless steel**
15 (½ in)	10 (⅜ in)	40	413 (16.3)	RD 28x⅛ in	10 (0.39)	44.5	77 (3.03)	46 (1.81)	278 / 405***	9 / 10***	12 / 13***
	15 (½ in)			RD 34x⅛ in	16 (0.63)	(1.75)			(10.94 / 15.94***)	(20 / 22***)	(27 / 29***)
	20 (¾ in)			RD 44x⅛ in	20 (0.79)						
25 (1 in)	20 (¾ in)		590 (23.2)	RD 44x⅛ in	20 (0.79)	69.5	103	62	317 / 444***	11 / 12***	14 / 15***
	25 (1 in)			RD 52x⅛ in	26 (1.02)	(2.74)	(4.06)	(2.44)	(12.48 / 17.48***)	(24 / 27***)	(31 / 33***)
	40 (1 ½ in)			RD 65x⅛ in	38 (1.5)						
50 (2 in)	40 (1 ½ in)		763 (30.0)	RD 65x⅛ in	38 (1.5)	99 (3.46)	125	80	354 / 481***	27 / 28***	30 / 31***
	50 (2 in)	25	740 (29.1)	RD 78x⅛ in	50 (1.97)		(4.92)	(3.15)	(13.94 / 18.94***)	(60 / 62***)	(66 / 68***)
	65 (2 ½ in)			RD 95x⅛ in	66 (2.6)						
80 (3 in)	65 (2 ½ in)		990 (39.0)	RD 95x⅛ in	66 (2.6)	155	183	123	445 / 572***	68 / 69***	71 / 72***
	80 (3 in)		940 (37.0)	RD 110x¼ in	81 (3.19)	(6.10)	(7.20)	(4.84)	(17.52 / 22.52***)	(150 / 152***)	(157 / 159***)
	100 (4 in)			RD 130x¼ in	100 (3.94)						

Process connection in accordance with DIN 32676 meter tube nominal diameter DN 15 to 80 (½ to 3 in.)

Meter tube	Process connection		L	Ø DA	Ø Di	Ø A	B	C	E	Approximate weight	
DN	DN	PN								Aluminum*	Stainless steel**
15 (½ in)	10 (⅜ in)	40	413 (16.3)	34 (1.34)	10 (0.39)	44.5	77 (3.03)	46 (1.81)	278 / 405***	9 / 10***	12 / 13***
	15 (½ in)				16 (0.63)	(1.75)			(10.94 / 15.94***)	(20 / 22***)	(27 / 29***)
	20 (¾ in)				20 (0.79)						
25 (1 in)	20 (¾ in)		590 (23.2)		20 (0.79)	69.5	103	62	317 / 444***	11 / 12***	14 / 15***
	25 (1 in)			50.5 (1.99)	26 (1.02)	(2.74)	(4.06)	(2.44)	(12.48 / 17.48***)	(24 / 27***)	(31 / 33***)
	40 (1 ½ in)				38 (1.5)						
50 (2 in)	40 (1 ½ in)		763 (30.0)		38 (1.5)	99 (3.46)	125	80	354 / 481***	27 / 28***	30 / 31***
	50 (2 in)	25	740 (29.1)	64 (2.52)	50 (1.97)		(4.92)	(3.15)	(13.94 / 18.94***)	(60 / 62***)	(66 / 68***)
	65 (2 ½ in)			91 (3.58)	66 (2.6)						
80 (3 in)	65 (2 ½ in)	10	950 (37.4)		66 (2.6)	155	183	123	445 / 572***	68 / 69***	71 / 72***
	80 (3 in)		910 (35.83)	106 (4.17)	81 (3.19)	(6.10)	(7.20)	(4.84)	(17.52 / 22.52***)	(150 / 152***)	(157 / 159***)
	100 (4 in)			119 (4.69)	100 (3.94)						

* Devices with terminal boxes made from aluminum.

** Devices with terminal boxes made from stainless steel.

*** Devices with '**Extended tower length – TE1, TE2**' option or '**Burst pressure limits of the burst-proof sensor housing – PR5, PR6, PR7**' option.

L dimension tolerance: +0 / −3 mm (+0 / −0.118 in)

Dimensions for sensors featuring meter tubes with nominal diameter DN 15 to 80 (½ to 3 in.) and process connection in accordance with ASME BPE

Meter tube	Process connection		L	Ø DA	Ø Di	Ø A	B	C	E	Approximate weight	
DN	DN	PN								Aluminum[1]	Stainless steel[2]
15 (½ in)	⅜ in-Type A	10	–	–	–	44.5 (1.75)	77 (3.03)	46 (1.81)	278 / 405[3] (10.94 / 15.94[3])	9 / 10[3] (20 / 22[3])	12 / 13[3] (27 / 29[3])
	½ in-Type A		433 (17.05)	25 (0.98)	9.4 (0.37)						
	¾ in-Type A		–	–	–						
25 (1 in)	¾ in-Type A		–	–	–	69.5 (2.74)	103 (4.06)	62 (2.44)	317 / 444[3] (12.48 / 17.48[3])	11 / 12[3] (24 / 27[3])	14 / 15[3] (31 / 33[3])
	1 in-Type B		590 (23.23)	50.4 (1.98)	22.1 (0.87)						
	1 ½ in-Type B		590 (23.23)	50.4 (1.98)	34.8 (1.37)						
50 (2 in)	1 ½ in-Type B		–	–	–	99 (3.46)	125 (4.92)	80 (3.15)	354 / 481[3] (13.94 / 18.94[3])	27 / 28[3] (60 / 62[3])	30 / 31[3] (66 / 68[3])
	2 in-Type B		740 (29.13)	63.9 (2.52)	47.5 (1.87)						
	2 ½ in-Type B		–	–	–						
80 (3 in)	2 ½ in-Type B		950 (37.40)	77.4 (3.05)	60.2 (2.37)	155 (6.10)	183 (7.20)	183 (7.20)	445 / 572[3] (17.52 / 22.52[3])	68 / 69[3] (150 / 152[3])	71 / 72[3] (157 / 159[3])
	3 in-Type B		910 (35.83)	90.9 (3.19)	72.9 (2.87)						
	4 in-Type B		910 (35.83)	118.9 (4.68)	97.4 (3.83)						

Process connection in accordance with DIN ISO 228 and ASME B 1.20.1, meter tube nominal diameter DN 15 (½ in)

Meter tube	Process connection		L	GL[4]	WS[5]	SWL[5]	Ø A	B	C	E	Approximate weight	
DN	DN / G	PN									Aluminum[1]	Stainless steel[2]
15 (½ in)	8 (¼ in) / G ¼ in	100	450 (17.72)	10 (0.39)	19	10 (0.39)	44.5 (1.75)	77 (3.03)	46 (1.81)	278 / 405[3] (10.94 / 15.94[3])	9 / 10[3] (20 / 22[3])	12 / 13[3] (27 / 29[3])
	15 (½ in) / G ½ in			13.5 (0.53)	27	15 (0.59)						
	25 (1 in) / G 1 in		490 (19.29)	17 (0.67)	50	20 (0.79)						
	15 (½ in) / ½ in NPT		450 (17.72)	15.6 (0.61)	27	15 (0.59)						

1 Devices with terminal boxes made from aluminum.

2 Devices with terminal boxes made from stainless steel.

3 Devices with '**Extended tower length – TE1, TE2**' option or '**Burst pressure limits of the burst-proof sensor housing – PR5, PR6, PR7**' option.

4 Dimension GL: Specification of thread length of the female thread.

5 Dimension SW: Specification of width across flats in mm, dimension SWL: Specification of wrench flat length in mm.

L dimension tolerance: +0 / −3 mm (+0 / −0.118 in)

… Flowmeter sensor

… Dimensions

Dimensions for devices with wetted parts made from C4 or C22 nickel alloy

For devices with wetted parts made from C4 or C22 nickel alloy, the installation length (L) is different from previous tables. All other dimensions and the weight are unchanged.
Dimensions in mm (in).

Dimensions for sensors with process connection in accordance with EN 1092-1 and ASME B16.5 (ANSI)

Meter tube nominal diameter	Process connection	L EN 1092-1 B1 PN 16	L EN 1092-1 B1 PN 40	L EN 1092-1 B2 PN 63	L EN 1092-1 B2 PN 100	L ASME CL150	L ASME CL300	L ASME CL600	L JIS 10K
DN 15 (½ in)	DN 10 (¼ in)	–	450 (17.8)	450 (17.8)	450 (17.8)	–	–	–	450 (17.8)
	DN 15 (½ in)	–	447 (17.6)	447 (17.6)	447 (17.6)	447 (17.6)	447 (17.6)	447 (17.6)	447 (17.6)
	DN 20 (¾ in)	–	427 (17.8)	427 (17.8)	427 (17.8)	427 (17.8)	427 (17.8)	427 (17.8)	427 (17.8)
DN 25 (1 in)	DN 20 (¾ in)	–	647 (25.5)	647 (25.5)	647 (25.5)	647 (25.5)	647 (25.5)	647 (25.5)	647 (25.5)
	DN 25 (1 in)	–	608 (24)	608 (24)	608 (24)	608 (24)	608 (24)	608 (24)	608 (24)
	DN 40 (1½ in)	–	577 (22.7)	577 (22.7)	577 (22.7)	577 (22.7)	577 (22.7)	577 (22.7)	577 (22.7)
DN 50 (2 in)	DN 40 (1½ in)	–	815 (32.1)	815 (32.1)	815 (32.1)	815 (32.1)	815 (32.1)	815 (32.1)	815 (32.1)
	DN 50 (2 in)	–	765 (30.1)	765 (30.1)	765 (30.1)	765 (30.1)	765 (30.1)	765 (30.1)	765 (30.1)
	DN 65 (2½ in)	–	820 (32.3)	820 (32.3)	820 (32.3)	793 (31.2)	793 (31.2)	793 (31.2)	820 (32.3)
DN 80 (3 in)	DN 65 (2½ in)	–	1011 (39.8)	1011 (39.8)	1011 (39.8)	1011 (39.8)	1011 (39.8)	1011 (39.8)	1011 (39.8)
	DN 80 (3 in)	–	976 (38.4)	–	976 (38.4)	976 (38.4)	976 (38.4)	976 (38.4)	976 (38.4)
	DN 100 (4 in)	976 (38.4)	976 (38.4)	976 (38.4)	976 (38.4)	976 (38.4)	976 (38.4)	976 (38.4)	976 (38.4)
DN 100 (4 in)	DN 80 (3 in)	1357 (53.4)	1357 (53.4)	1357 (53.4)	1357 (53.4)	1357 (53.4)	1357 (53.4)	1357 (53.4)	1357 (53.4)
	DN 100 (4 in)	1280 (50.4)	1280 (50.4)	1280 (50.4)	1280 (50.4)	1280 (50.4)	1280 (50.4)	1280 (50.4)	1280 (50.4)
	DN 150 (6 in)	1261 (49.6)	1261 (49.6)	1261 (49.6)	1261 (49.6)	1261 (49.6)	1261 (49.6)	1261 (49.6)	1261 (49.6)
DN 150 (6 in)	DN 100 (4 in)	1592 (62.7)	1592 (62.7)	1632 (64.3)	1632 (64.3)	1592 (62.7)	1632 (64.3)	1632 (64.3)	1592 (62.7)
	DN 150 (6 in)	1502 (59.1)	1502 (59.1)	1542 (60.7)	1542 (60.7)	1502 (59.1)	1542 (60.7)	1542 (60.7)	1502 (59.1)

L dimension tolerance:

- Meter tube nominal diameter DN 15 to 50 (½ to 2 in): +0 / −5 mm (+0 / −0.2 in)
- Meter tube nominal diameter DN 80 (3 in): +0 / −8 mm (+0 / −0.315 in)
- Meter tube nominal diameter DN 100 (4 in): +0 / −15 mm (+0 / −0.59 in)
- Meter tube nominal diameter DN 150 (6 in): +0 / −20 mm (+0 / −0.79 in)

Ordering information

Note

For additional information on dependencies and restrictions, and for help on product selection, please refer to the Online Product Selection Assistant (PSA) at www.abb.us/flow-selector.

CoriolisMaster FCB130, FCB150

CoriolisMaster FCB130 Coriolis Mass Flowmeter	**FCB130**	**XX**	**XX**	**XXXXX**	XX	XX	X	X	XX	XX	X
CoriolisMaster FCB150 Coriolis Mass Flowmeter	**FCB150**	**XX**	**XX**	**XXXXX**	XX	XX	X	X	XX	XX	X
Explosion Protection Certification											
General Purpose		Y0									
General purpose (FM3810, ANSI/UL61010-1)		G1									
ATEX / IECEx (Zone 2 / 22)		A2									
ATEX / IECEx (Zone 1 / 21)		A1									
cFMus version Class 1 Div. 2 (Zone 2 / 21)		F2									
cFMus version Class 1 Div. 1 (Zone 1 / 21)		F1									
Connection Design / Connection Box Material / Cable Glands											
Integral, defined by Transmitter housing			Y0								
Meter Size / Connection Size											
DN 15 (½ in) / DN 10 ⅜ in)				015E1							
DN 15 (½ in) / DN 15 (½ in)				015R0							
DN 15 (½ in) / DN 20 (¾ in)				015R1							
DN 25 (1 in) / DN 20 (¾ in)				025E1							
DN 25 (1 in) / DN 25 (1 in)				025R0							
DN 25 (1 in) / DN 40 (1½ in)				025R2							
DN 50 (2 in) / DN 40 (1½ in)				050E1							
DN 50 (2 in) / DN 50 (2 in)				050R0							
DN 50 (2 in) / DN 65 (2½ in)				050R1							
DN 80 (3 in) / DN 65 (2½ in)				080E1							
DN 80 (3 in) / DN 80 (3 in)				080R0							
DN 80 (3 in) / DN 100 (4 in)				080R1							
DN 100 (4 in) / DN 80 (3 in)				100E1							
DN 100 (4 in) / DN 100 (4 in)				100R0							
DN 100 (4 in) / DN 150 (6 in)				100R2							
DN 150 (6 in) / DN 100 (4 in)				150E2							
DN 150 (6 in) / DN 150 (6 in)				150R0							
DN 150 (6 in) / DN 200 (8 in)				150R2							

Continuation see next page

… Flowmeter sensor

… Ordering information

Base model							
CoriolisMaster FCB130 Coriolis Mass Flowmeter	**XX**	**XX**	**X**	**X**	XX	XX	X
CoriolisMaster FCB150 Coriolis Mass Flowmeter	**XX**	**XX**	**X**	**X**	XX	XX	X
Process Connection Type							
Flanges DIN PN 16	D2						
Flanges DIN PN 40	D4						
Flanges DIN PN 63	D5						
Flanges DIN PN 100	D6						
Flanges EN 1092-1 PN 40, NAMUR length (DN 15, DN 25, DN 50, DN 80)	S5						
Flanges with groove PN40 EN1092-10-D	S6						
Flanges EN 1092-1 PN 16, NAMUR length (DN 100, DN 150)	S7						
Flanges ANSI / ASME B16.5 Class 150	A1						
Flanges ANSI / ASME B16.5 Class 300	A3						
Flanges ANSI / ASME B16.5 Class 600	A6						
Flanges ANSI / ASME B16.5 Class 900 (p-t rating Cl 600)	A7						
Flanges ANSI / ASME B16.5 Class 1500 (p-t rating Cl 600)	A8						
Flanges JIS 10K	J1						
Flanges JIS 20K	J3						
Flanges JIS 16K	J5						
Threaded hygienic connection SMS1145, for pipe according to DIN11866 series A	K1						
Tri-Clamp acc. DIN 32676	T1						
Tri-Clamp acc. BPE	T3						
Food industry fittings acc. DIN 11851	F1						
Female NPT thread	N5						
Female G thread	M5						
Others	Z9						
Material of Wetted Parts							
Stainless steel		A1					
Ni-Alloy		C1					
Flow Calibration							
Flow forward ±0.40 % of flow rate, Gas 1 % of flow rate			A[1]				
Flow forward ±0.25 % of flow rate, Gas 1 % of flow rate			B[1]				
Flow forward ±0.15 % of flow rate, Gas 0.5 % of flow rate			C[2]				
Flow forward ±0.10 % of flow rate, Gas 0.5 % of flow rate			D[2]				
Flow forward ±0.20 % of flow rate, Gas 1 % of flow rate			E[1]				
Flow forward / reverse ±0.40 % of flow rate, Gas 1 % of flow rate			J[1]				
Flow forward / reverse ±0.25 % of flow rate, Gas 1 % of flow rate			K[1]				
Flow forward / reverse ±0.15 % of flow rate, Gas 0.5 % of flow rate			L[2]				
Flow forward / reverse ±0.10 % of flow rate, Gas 0.5 % of flow rate			M[2]				
Flow forward / reverse ±0.20 % of flow rate, Gas 1 % of flow rate			N[2]				
Others			Z				
Density Calibration							
Density 10 g/l				1[1]			
Density 2 g/l				3[2]			
Density 1 g/l				4[2]			
Density 0,4 g/l				5			
Others				9			

1 Only with CoriolisMaster FCB130

2 Only with CoriolisMaster FCB150

Continuation see next page

Base model			
CoriolisMaster FCB130 Coriolis Mass Flowmeter	**XX**	**XX**	**X**
CoriolisMaster FCB150 Coriolis Mass Flowmeter	**XX**	**XX**	**X**
Connection Design / Transmitter Housing Type / Transmitter Housing Material / Cable Glands			
Integral / Single compartment / Aluminum / 2 × M20 × 1,5	B1		
Integral / Single compartment / Aluminum / 2 × NPT ½ in	B2		
Integral / Single compartment / Stainless Steel / 2 × M20 × 1,5	T1		
Integral / Single compartment / Stainless Steel / 2 × NPT ½ in	T2		
Outputs			
MODBUS, 2 digital outputs (passive)		M2	
Power Supply			
11 to 30 V DC			C

Additional ordering information

CoriolisMaster FCB130 Coriolis Mass Flowmeter	**XX**	**XXX**	**XXX**	**XX**
CoriolisMaster FCB150 Coriolis Mass Flowmeter	**XX**	**XXX**	**XXX**	**XX**
Certificates				
Material monitoring with inspection certificate 3.1 acc. EN 10204	C2			
Material monitoring NACE MR 01-75 with inspection certificate 3.1 acc. EN 10204	CN			
Declaration of compliance with the order 2.1 acc. EN 10204	C4			
Inspection certificate 3.1 acc. EN 10204 for visual, dimensional and functional test	C6			
Inspection certificate 3.1 acc. EN 10204 for positive material identification PMI (confirmation only)	CA			
Pressure test acc. AD2000	CB			
Test package (pressure test, non-destructive test, welder & welding procedure certificate)	CT			
Inspection certificate 3.1 acc. EN 10204 for NDE of welds	C8			
Certificate of accuracy 2.1 acc. EN 10204	CM			
Inspection certificate 3.1 acc. EN 10204 for positive material identification PMI (inlclusive heat analysis)	C5			
Others	CZ			
Ships Register Certifications				
DNVG		CL1		
Custody Transfer Certification				
Custody transfer acc. MID (OIML Cl 0.5/0.3))			CT3[1]	
Custody transfer acc. MID (OIML Cl 0.5)			CT4[1]	
Special Operation Mode				
Standard + FillMass filling function				N5[1]
Standard + DensiMass concentration measurement				N6[1]
VeriMass - Meter verification				N7

1 Only with CoriolisMaster FCB150

Continuation see next page

… Flowmeter sensor

… Ordering information

Additional ordering information				
CoriolisMaster FCB130 Coriolis Mass Flowmeter	**XX**	**XXX**	**XX**	**XXX**
CoriolisMaster FCB150 Coriolis Mass Flowmeter	**XX**	**XXX**	**XX**	**XXX**
Documentation Language				
German	M1			
English	M5			
Language package Western Europe / Scandinavia (Languages: DA, ES, FR, IT, NL, PT, FI, SV)	MW			
Language package Eastern Europe (Languages: EL, CS, ET, LV, LT, HU, HR, PL, SK, SL, RO, BG)	ME			
Others	MZ			
Burst pressure limits of the burst-proof sensor housing				
Maximum burst pressure 6 MPa / 60 bar / 870 psi inclusive tower length extension		PR5		
Maximum burst pressure 10 MPa / 100 bar / 1450 psi inclusive tower length extension		PR6		
Maximum burst pressure 15 MPa / 150 bar / 2175 psi inclusive tower length extension		PR7		
Device Identification Plate				
Stainless steel plate with TAG no.			T1	
Others			TZ	
Extended Tower Length				
Tower length extension – meter insulation capability				TE1
Tower length extension – meter insulation capability, potted				TE2
Tower length extension – Marine meter insulation capability				TE3

Accessories

Description	**Order number**
FCx1xx Local Operation Interface (LOI) adapter and cable	3KXS310000L0001

Note
For additional information on dependencies and restrictions, and for help on product selection, please refer to the Online Product Selection Assistant (PSA) at www.abb.us/flow-selector.

CoriolisMaster FCH130, FCH150

Base model											
CoriolisMaster FCH130 Coriolis Mass Flowmeter	**FCH130**	**XX**	**XX**	**XXXXX**	**XX**	**XX**	X	X	XX	XX	X
CoriolisMaster FCH150 Coriolis Mass Flowmeter	**FCH150**	**XX**	**XX**	**XXXXX**	**XX**	**XX**	X	X	XX	XX	X
Explosion Protection Certification											
General Purpose		Y0									
General purpose (FM3810, ANSI/UL61010-1)		G1									
ATEX / IECEx (Zone 2 / 22)		A2									
ATEX / IECEx (Zone 1 / 21)		A1									
cFMus version Class 1 Div. 2 (Zone 2 / 21)		F2									
cFMus version Class 1 Div. 1 (Zone 1 / 21)		F1									
Connection Design / Connection Box Material / Cable Glands											
Integral, defined by Transmitter housing			Y0								
Meter Size / Connection Size											
DN 25 (1 in) / DN 20 (¾ in)				025E1							
DN 25 (1 in) / DN 25 (1 in)				025R0							
DN 25 (1 in) / DN 40 (1½ in)				025R2							
DN 50 (2 in) / DN 40 (1½ in)				050E1							
DN 50 (2 in) / DN 50 (2 in)				050R0							
DN 50 (2 in) / DN 65 (2½ in)				050R1							
DN 80 (3 in) / DN 65 (2½ in)				080E1							
DN 80 (3 in) / DN 80 (3 in)				080R0							
DN 80 (3 in) / DN 100 (4 in)				080R1							
Process Connection Type											
Tri-Clamp acc. DIN 32676					T1						
Tri-Clamp acc. BPE					T3						
Food industry fittings acc. DIN 11851					F1						
Others					Z9						
Material of Wetted Parts											
Stainless steel AISI 316L (1.4404), polished						H2					

Continuation see next page

… Flowmeter sensor

… Ordering information

Base model					
CoriolisMaster FCH130 Coriolis Mass Flowmeter	**X**	**X**	**XX**	**XX**	**X**
CoriolisMaster FCH150 Coriolis Mass Flowmeter	**X**	**X**	**XX**	**XX**	**X**
Flow Calibration					
Flow forward ±0.40 % of flow rate, Gas 1 % of flow rate	A*				
Flow forward ±0.25 % of flow rate, Gas 1 % of flow rate	B*				
Flow forward ±0.15 % of flow rate, Gas 0.5 % of flow rate	C**				
Flow forward ±0.10 % of flow rate, Gas 0.5 % of flow rate	D**				
Flow forward ±0.20 % of flow rate, Gas 1 % of flow rate	E*				
Flow forward / reverse ±0.40 % of flow rate, Gas 1 % of flow rate	J*				
Flow forward / reverse ±0.25 % of flow rate, Gas 1 % of flow rate	K*				
Flow forward / reverse ±0.15 % of flow rate, Gas 0.5 % of flow rate	L**				
Flow forward / reverse ±0.10 % of flow rate, Gas 0.5 % of flow rate	M**				
Flow forward / reverse ±0.20 % of flow rate, Gas 1 % of flow rate	N*				
Others	Z				
Density Calibration					
Density 10 g/l		1*			
Density 2 g/l		3**			
Density 1 g/l		4**			
Density 0,4 g/l		5**			
Others		9			
Connection Design / Transmitter Housing Type / Transmitter Housing Material / Cable Glands					
Integral / Single compartment / Aluminum / 2 x M20 x 1.5			B1		
Integral / Single compartment / Aluminum / 2 x NPT ½ in.			B2		
Integral / Single compartment / Stainless Steel / 2 x M20 x 1.5			T1		
Integral / Single compartment / Stainless Steel / 2 x NPT ½ in.			T2		
Outputs					
MODBUS, 2 digital outputs (passive)				M2	
Power Supply					
11 to 30 V DC					C

* Only with CoriolisMaster FCH130

** Only with CoriolisMaster FCH150

Continuation see next page

Additional ordering information

CoriolisMaster FCH130 Coriolis Mass Flowmeter	**XX**	**XX**	**XX**	**XX**	**XXX**
CoriolisMaster FCH150 Coriolis Mass Flowmeter	**XX**	**XX**	**XX**	**XX**	**XXX**
Certificates					
Test report 2.2 acc. EN 10204 confirmation of material	C1				
Material monitoring with inspection certificate 3.1 acc. EN 10204	C2				
Material monitoring with inspection certificate 3.2 acc. EN 10204	C3				
Material monitoring NACE MR 01-75 with inspection certificate 3.1 acc. EN 10204	CN				
Declaration of compliance with the order 2.1 acc. EN 10204	C4				
Inspection certificate 3.1 acc. EN 10204 for visual, dimensional and functional test	C6				
Inspection certificate 3.1 acc. EN 10204 for positive material identification PMI (confirmation only)	CA				
Pressure test acc. AD2000	CB				
Test package (pressure test, non-destructive test, welder & welding procedure certificate)	CT				
Inspection certificate 3.1 acc. EN 10204 for NDE of welds	C8				
Certificate of accuracy 2.1 acc. EN 10204	CM				
Inspection certificate 3.1 acc. EN 10204 for positive material identification PMI (inlclusive heat analysis)	C5				
Others	CZ				
Special Operation Mode					
Standard + FillMass filling function		N5**			
Standard + DensiMass concentration measurement		N6**			
VeriMass - Meter verification		N7			
Documentation Language					
German			M1		
English			M5		
Language package Western Europe / Scandinavia (Languages: DA, ES, FR, IT, NL, PT, FI, SV)			MW		
Language package Eastern Europe (Languages: EL, CS, ET, LV, LT, HU, HR, PL, SK, SL, RO, BG)			ME		
Others			MZ		
Device Identification Plate					
Stainless steel plate with TAG no.				T1	
Others				TZ	
Extended Tower Length					
Tower length extension – meter insulation capability					TE1
Tower length extension – meter insulation capability, potted					TE2

* EHEDG (optional), FDA-konform

** Only with CoriolisMaster FCH150

Accessories

Description	Order number
FCx1xx Local Operation Interface (LOI) adapter and cable	3KXS310000L0001

Use in potentially explosive atmospheres

Note
Further information on the approval of devices for use in potentially explosive atmospheres can be found in the type examination certificates or the relevant certificates at www.abb.com/flow.

Device overview

ATEX / IECEx

	Standard / No explosion protection	Zone 2, 21, 22	Zone 1, 21 (Zone 0)
Model number	**FCx1xx Y0**	**FCx1xx A2**	**FCx1xx A1**
• Standard • Zone 2, 21, 22 • Zone 1, 21 • Zone 0	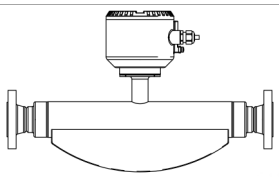	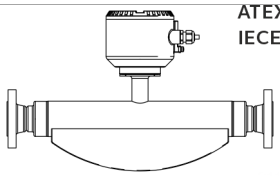	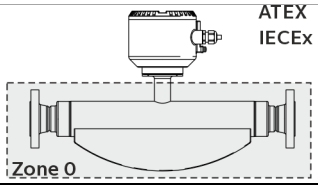

cFMus

	Standard / No explosion protection	Class I Div. 2 Zone 2, 21	Class I Div. 1 Zone 0, 1, 20 ,21
Model number	**FCx1xx Y0**	**FCx1xx F2**	**FCx1xx F1**
• Standard • Class I Div. 2 • Class I Div. 1 • Zone 2, 21 • Zone 1, 21 • Zone 0, 20	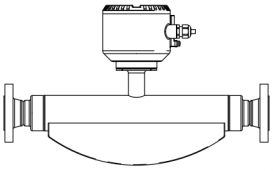	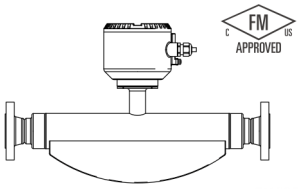	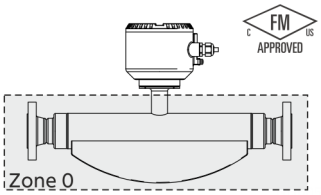

Ex marking

Note

- A specific marking applies, depending on the design.
- ABB reserves the right to modify the Ex-marking. Refer to the name plate for the exact marking.

ATEX / IECEx

Model FCx1xx-A2... in Zone 2, 21, 22	
ATEX	
Certificate (ATEX):	FM 14 ATEX0017X
II 3 G Ex ec mc IIC T6 … T2 Gc	
FM 14 ATEX0016X	
II 2 D Ex tb IIIC T85°C … T_{medium} Db	
IECEx	
Certificate:	IECEx FME 14.0003X
Ex ec mc IIC T6 … T2 Gc	
Ex tb IIIC T85°C ... T_{medium} Db	

Model FCx1xx-A1... in Zone 1, 21 (Zone 0)	
ATEX	
Certificate (ATEX):	FM 14 ATEX0016X
II 1/2 G Ex eb ia mb IIC T6 ... T2 Ga/Gb	
II 2 D Ex ia tb IIIC T85°C ... T_{medium} Db	
IECEx	
Certificate:	IECEx FME 14.0003X
Ex eb ia mb IIC T6 ... T2 Ga/Gb $T_{amb.}$max= 70°C	
Ex ia tb IIIC T85°C ... T_{medium} Db	

cFMus

Model FCx1xx-F2... in Zone 2, Div. 2	
FM (marking US)	
Certificate:	FM16US0201X
NI: CL I, DIV2, GPS ABCD, T6 … T2	
NI: CL II, III, DIV2, GPS EFG, T6 … T3B	
DIP: CL II, Div 1, GPS EFG, T6 … T3B	
DIP: CL III, Div 1, 2, T6 … T3B	
CL I, ZN 2, AEx ec IIC T6 … T2 Gc	
ZN 21 AEx tb IIIC T85°C … T165°C Db	
See Instructions for temperature class information	
FM (marking Canada)	
Certificate:	FM16CA0104X
NI: CL I, DIV2, GPS ABCD, T6 … T2	
NI: CL II, III, DIV2, GPS EFG, T6 … T3B	
DIP: CL II, Div 1, GPS EFG, T6 … T3B	
DIP: CL III, Div 1, 2, T6 … T3B	
Ex ec IIC T6 … T2 Gc	
See Instructions for temperature class information	

Model FCx1xx-F1... in Zone 1, Div. 1	
FM (marking US)	
Certificate:	FM16US0201X
XP-IS: CL I, Div 1, GPS BCD, T6 … T2	
DIP: CL II, Div 1, GPS EFG, T6 … T3B	
DIP: CL III, Div 1, 2, T6 … T3B	
CL I, ZN 1, AEx db ia IIB+H2 T6 … T2 Ga/Gb	
ZN 21 AEx ia tb IIIC T85°C to T165°C Db	
See Instructions for temperature class information and Installation Drawing No. 3KXF000014G0009	
FM (marking Canada)	
Certificate:	FM16CA0104X
XP-IS: CL I, Div 1, GPS BCD, T6 … T2	
DIP: CL II, Div 1, GPS EFG, T6 … T2	
DIP: CL III, Div 1, 2, T6 … T3B	
Ex db ia IIB+H2 T6 … T2 Gb	
Ex ia INTRINSICALLY SAFE SECURITE INTRINSEQUE	
See Instructions for temperature class information and Installation Drawing No. 3KXF000014G0009	

… Use in potentially explosive atmospheres

Temperature data

Temperature resistance for the connecting cable

The temperature at the cable entries of the device is dependent on the measuring medium temperature T_{medium} and the ambient temperature $T_{amb.}$.

For the electrical connection of the device, use only cables with sufficient temperature resistance in accordance with the table.

$T_{amb.}$	Temperature resistance for the connecting cable
≤ 50 °C (≤ 122 °F)	≥ 105 °C (≥ 221 °F)
≤ 60 °C (≤ 140 °F)	≥ 110 °C (≥ 230 °F)
≤ 70 °C (≤ 158 °F)	≥ 120 °C (≥ 248 °F)

From an ambient temperature of $T_{amb.}$ ≥ 60 °C (≥ 140 °F) the wires in the terminal boxes must be additionally insulated using the enclosed silicone hoses.

Environmental and process conditions for model FCx1xx…

Ambient temperature $T_{amb.}$	-20 to 70 °C (−4 to 158 °F)
	-40 to 70 °C* (-40 to 158 °F)*
Measuring medium temperature T_{medium}	−40 to 205 °C (−40 to 400 °F)
IP rating / NEMA rating	IP 65, IP 67 / NEMA 4X,Type 4X

* Optional, with order code '**Ambient temperature range – TA9**'

Temperature classes and permissible measuring medium temperature

Measuring medium temperature (Ex data) for model FCx1xx-A1... in Zone 1

The table shows the maximum permissible measuring medium temperature as a function of ambient temperature and temperature class.

	Temperature class					
Ambient temperature $T_{amb.}$	**T1**	**T2**	**T3**	**T4**	**T5**	**T6**
≤ 30 °C (≤ 86 °F)	205 °C (400 °F)	205 °C (400 °F)	195 °C (383 °F)	130 °C (266 °F)	95 °C (203 °F)	80 °C (176 °F)
≤ 40 °C (≤ 104 °F)	205 °C (400 °F)	205 °C (400 °F)	195 °C (383 °F)	130 °C (266 °F)	95 °C (203 °F)	80 °C (176 °F)
≤ 50 °C (≤ 122 °F)	205 °C (400 °F)	205 °C (400 °F)	195 °C (383 °F)	130 °C (266 °F)	95 °C (203 °F)	80 °C (176 °F)
≤ 60 °C (≤ 140 °F)	205 °C (400 °F)	205 °C (400 °F)	195 °C (383 °F)	130 °C (266 °F)	95 °C (203 °F)	80 °C (176 °F)
≤ 70 °C (≤ 158 °F)	205 °C (400 °F)	205 °C (400 °F)	195 °C (383 °F)	130 °C (266 °F)	95 °C (203 °F)	80 °C (176 °F)

Measuring medium temperature (Ex data) for model FCx1xx-A2... in Zone 2

The table shows the maximum permissible measuring medium temperature as a function of ambient temperature and temperature class.

	Temperature class					
Ambient temperature $T_{amb.}$	**T1**	**T2**	**T3**	**T4**	**T5**	**T6**
≤ 30 °C (≤ 86 °F)	205 °C (400 °F)* 195 °C (383 °F)	205 °C (400 °F)* 195 °C (383 °F)	195 °C (383 °F)* 130 °C (266 °F)	130 °C (266 °F)* 95 °C (203 °F)	95 °C (203 °F)* 80 °C (176 °F)	80 °C (176 °F)
≤ 40 °C (≤ 104 °F)	205 °C (400 °F)* 180 °C (356 °F)	205 °C (400 °F)* 180 °C (356 °F)	195 °C (383 °F)* 130 °C (266 °F)	130 °C (266 °F)* 95 °C (203 °F)	95 °C (203 °F)* 80 °C (176 °F)	—
≤ 50 °C (≤ 122 °F)	205 °C (400 °F)* 140 °C (284 °F)	205 °C (400 °F)* 140 °C (284 °F)	130 °C (266 °F)* 130 °C (266 °F)	130 °C (266 °F)* 95 °C (203 °F)	80 °C (176 °F)* 60 °C (140 °F)	—
≤ 60 °C (≤ 140 °F)	205 °C (400 °F)* 120 °C (248 °F)	205 °C (400 °F)* 120 °C (248 °F)	130 °C (266 °F)* 120 °C (248 °F)	130 °C (266 °F)* 95 °C (203 °F)	—	—
≤ 70 °C (≤ 158 °F)	180 °C (356 °F)* 80 °C (176 °F)	180 °C (356 °F)* 80 °C (176 °F)	130 °C (266 °F)* 80 °C (176 °F)	130 °C (266 °F)* 80 °C (176 °F)	—	—

* Only with the '**Extended tower length – TE1, TE2 or TE3**' order option

Measuring medium temperature (Ex data) for model FCx1xx-A1... in Zone 21 and FCx1xx-A2... in Zone 22

The table shows the maximum permissible measuring medium temperature as a function of ambient temperature and temperature class.

	Temperature class				
Ambient temperature $T_{amb.}$	**T210 °C**	**T200 °C**	**T135 °C**	**T100 °C**	**T85°C**
≤ 30 °C (≤ 86 °F)	195 °C (383 °F)	130 °C (266 °F)	95 °C (203 °F)	80 °C (176 °F)	80 °C (176 °F)
≤ 50 °C (≤ 122 °F)	140 °C (284 °F)	130 °C (266 °F)	95 °C (203 °F)	60 °C (140 °F)	—
≤ 60 °C (≤ 140 °F)	120 °C (248 °F)	120 °C (248 °F)	95 °C (203 °F)	—	—
≤ 70 °C (≤ 158 °F)	80 °C (176 °F)	80 °C (176 °F)	80 °C (176 °F)	—	—

… Use in potentially explosive atmospheres

… Temperature data

Measuring medium temperature (Ex data) for model FCx1xx-F1… in Class I Div. 1, Class I Zone 1

The table shows the maximum permissible measuring medium temperature as a function of ambient temperature and temperature class.

	Temperature class					
Ambient temperature $T_{amb.}$	**T1**	**T2**	**T3**	**T4**	**T5**	**T6**
≤ 30 °C (≤ 86 °F)	205 °C (400 °F)	205 °C (400 °F)	195 °C (383 °F)	130 °C (266 °F)	95 °C (203 °F)	80 °C (176 °F)
≤ 40 °C (≤ 104 °F)	205 °C (400 °F)	205 °C (400 °F)	195 °C (383 °F)	130 °C (266 °F)	95 °C (203 °F)	80 °C (176 °F)
≤ 50 °C (≤ 122 °F)	205 °C (400 °F)	205 °C (400 °F)	195 °C (383 °F)	130 °C (266 °F)	95 °C (203 °F)	80 °C (176 °F)
≤ 60 °C (≤ 140 °F)	205 °C (400 °F)	205 °C (400 °F)	195 °C (383 °F)	130 °C (266 °F)	95 °C (203 °F)	80 °C (176 °F)
≤ 70 °C (≤ 158 °F)	205 °C (400 °F)	205 °C (400 °F)	195 °C (383 °F)	130 °C (266 °F)	95 °C (203 °F)	80 °C (176 °F)

Measuring medium temperature (Ex data) for model FCx1xx-F2… in Class I Div. 2, Class I Zone 2

The table shows the maximum permissible measuring medium temperature as a function of ambient temperature and temperature class.

	Temperature class					
Ambient temperature $T_{amb.}$	**T1**	**T2**	**T3**	**T4**	**T5**	**T6**
≤ 30 °C (≤ 86 °F)	205 °C (400 °F)* 195 °C (383 °F)	205 °C (400 °F)* 195 °C (383 °F)	195 °C (383 °F)* 130 °C (266 °F)	130 °C (266 °F)* 95 °C (203 °F)	95 °C (203 °F)* 80 °C (176 °F)	80 °C (176 °F)
≤ 40 °C (≤ 104 °F)	205 °C (400 °F)* 180 °C (356 °F)	205 °C (400 °F)* 180 °C (356 °F)	195 °C (383 °F)* 130 °C (266 °F)	130 °C (266 °F)* 95 °C (203 °F)	95 °C (203 °F)* 80 °C (176 °F)	—
≤ 50 °C (≤ 122 °F)	205 °C (400 °F)* 140 °C (284 °F)	205 °C (400 °F)* 140 °C (284 °F)	130 °C (266 °F)* 130 °C (266 °F)	130 °C (266 °F)* 95 °C (203 °F)	80 °C (176 °F)* 60 °C (140 °F)	—
≤ 60 °C (≤ 140 °F)	205 °C (400 °F)* 120 °C (248 °F)	205 °C (400 °F)* 120 °C (248 °F)	130 °C (266 °F)* 120 °C (248 °F)	130 °C (266 °F)* 95 °C (203 °F)	—	—
≤ 70 °C (≤ 158 °F)	180 °C (356 °F)* 80 °C (176 °F)	180 °C (356 °F)* 80 °C (176 °F)	130 °C (266 °F)* 80 °C (176 °F)	130 °C (266 °F)* 80 °C (176 °F)	—	—

* Only with the '**Extended tower length – TE1, TE2 or TE3**' order option

Measuring medium temperature (Ex data) for model FCx1xx-F1… in Zone 21, Class II / III and FCx1xx-F2… in Zone 22, Class II / III

The table shows the maximum permissible measuring medium temperature as a function of ambient temperature and temperature class.

	Temperature class				
Ambient temperature $T_{amb.}$	**T210 °C**	**T200 °C**	**T135 °C**	**T100 °C**	**T85°C**
≤ 30 °C (≤ 86 °F)	195 °C (383 °F)	130 °C (266 °F)	95 °C (203 °F)	80 °C (176 °F)	80 °C (176 °F)
≤ 50 °C (≤ 122 °F)	140 °C (284 °F)	130 °C (266 °F)	95 °C (203 °F)	60 °C (140 °F)	—
≤ 60 °C (≤ 140 °F)	120 °C (248 °F)	120 °C (248 °F)	95 °C (203 °F)	—	—
≤ 70 °C (≤ 158 °F)	80 °C (176 °F)	80 °C (176 °F)	80 °C (176 °F)	—	—

ATEX und IECEx electrical data

Modbus outputs and digital outputs

Model ATEX, IECEX: FCx1xx-A1..., FCx1xx-A2...
Model: cFMus: FCx1xx-F1..., FCx1xx-F2...

	Operating values (general)		Type of protection									
			'ec' / 'NI' (Zone 2, Div. 2)		'eb' / 'XP' (Zone 1 / Div. 1)		'ia' / 'IS' (Zone 1 / Div. 1)					
Outputs	U_N [V]	I_N [mA]	U_N [V]	I_N [mA]	U_M [V]	I_M [mA]	U_O [V]	I_O [mA]	P_O [mW]	C_O [nF]	$C_{O\ pa}$ [nF]	L_O [µH]
Modbus, active	3	30	3	30	30	30	4,2	150	150	13900	—	20
Terminals A / B							U_i [V]	I_i [mA]	P_i [mW]	C_i [nF]	C_i pa [nF]	L_i [µH]
							4,2	150	150	13900	—	20
Digital output DO1, passive	30	25	30	25	30	25	30	25	187	2,4	—	200
Terminals 41 / 42												
Digital output DO2, passive	30	25	30	25	30	25	30	25	187	20	—	200
Terminals 51 / 52												

All outputs are electrically isolated from each other and from the power supply.
Digital outputs DO1 / DO2 are not electrically isolated from each other. Terminals 42 / 52 have the same potential.

Special connection conditions

Note
If the protective earth (PE) is connected in the flowmeter's terminal box, you must ensure that no dangerous potential difference can arise between the protective earth (PE) and the potential equalization (PA) in areas with explosion risk.

Note
- If the type of protection for the explosion protection of the device has not been marked on the name plate by the manufacturer, during installation of the device, the operator must identify the type of protection used on the name plate in a permanent manner!

Note
The safety requirements for intrinsically safe circuits in the EC type examination certificate of the device must be complied with.

The output circuits are designed so that they can be connected to both intrinsically-safe and non-intrinsically-safe circuits.

- Combining intrinsically safe and non-intrinsically safe circuits is not permitted.
- On intrinsically safe circuits, potential equalization should be established along the entire length of the cable used for the signal outputs.
- The rated voltage of the non-intrinsically safe circuits is U_M = 30 V.
- Intrinsic safety is preserved If the rated voltage U_M = 30 V is not up-scaled when connections are established to non-intrinsically safe external circuits.
- Once output circuits are connected and have been operated for a while, a change of the protection (instrinsically safe and vice versa) is not permitted.

Questionnaire

Customer:	**Date:**
Ms. / Mr.:	**Department:**
Telephone:	**Fax:**

Measuring medium	Liquid content:	Gas content:
Flow rate: (min., max., operating point)	kg/h	
Density: (min., max., operating point)	kg/m^3	
Dynamic viscosity: (min., max., operating point)	mPas/cP	
Measuring medium temperature: (min., max., operating point)	°C	
Ambient temperature	°C	
Pressure: (min., max., operating point)	bar	
Rate of flow:	☐ Steady	☐ Pulsating
Batch operation:	☐ Yes	☐ No
Concentration calculation:	☐ Yes	☐ No
Transmitter design:	☐ Integral mount design	☐ Remote mount design
Explosion protection:	☐ Yes	☐ No
Power supply:	☐ 11 to 30 V DC	
Electrical outputs:	☐ Pulse output, passive	Communication: ☐ Modbus-RTU, RS 485
Additional specifications: Pipeline diameter: Process connection:	.....mm	

Trademarks

Modbus is a registered trademark of Schneider Automation Inc.

Hastelloy C-4 is a trademark of Haynes International

Hastelloy C-22 is a trademark of Haynes International

Windows is a registered trademark of Microsoft Corporation.

Sales

Service

Notes

ABB Measurement & Analytics

For your local ABB contact, visit:
www.abb.com/contacts

For more product information, visit:
www.abb.com/flow

We reserve the right to make technical changes or modify the contents of this document without prior notice. With regard to purchase orders, the agreed particulars shall prevail.
ABB does not accept any responsibility whatsoever for potential errors or possible lack of information in this document.

We reserve all rights in this document and in the subject matter and illustrations contained therein. Any reproduction, disclosure to third parties or utilization of its contents – in whole or in parts – is forbidden without prior written consent of ABB.

© ABB 2026

3KXF411009R1001

DS/FCB100/FCH100-EN Rev. N 09.2026