ABB MEASUREMENT & ANALYTICS | DATA SHEET

CoriolisMaster FCB400, FCH400

Coriolis mass flowmeter

ENGINEERED
TO OUTRUN

Measurement made easy

High-precision measurement of mass and volume flow, density, temperature and concentration with just one device

Up to five modular I/Os

- Optional plug-in cards
- Automatic firmware update
- Integrated solutions for filling operations and concentration measurement

SmartSensor

- All digital solution
- Measuring device intelligence located directly in the sensor
- Lower pressure loss

Integrated VeriMass device verification and diagnosis

- Predictive maintenance in the process
- Extended maintenance cycles
- Reduced maintenance effort

Overview – models

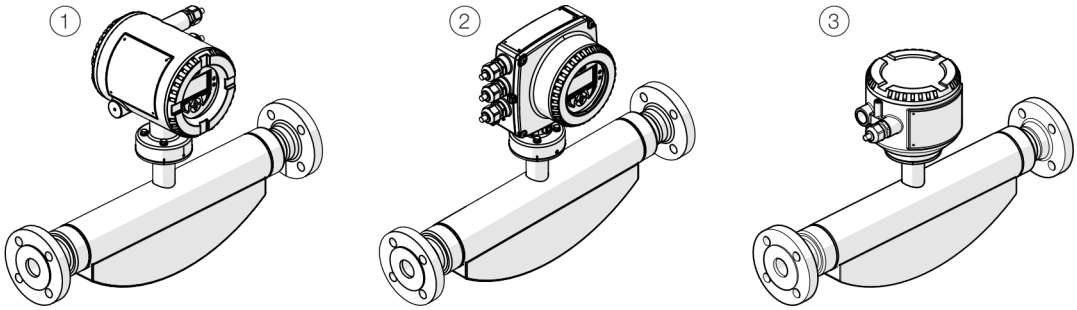

1 Sensor (integral mount design, dual-compartment housing)
2 Sensor (integral mount design, single-compartment housing)
3 Sensor (remote mount design)

Figure 1: Designs

Sensor				
Model	FCB400 standard design		FCH400 hygienic design	
Chassis	Integral mount design, remote mount design			
Measuring accuracy for liquids	**FCB430**	**FCB450**	**FCH430**	**FCH450**
Mass flow*	0.5 %, 0.4 %, 0.25 %, and 02 %	0.1 % and 0.15 %	0.4 %, 0.25 % and 0.2 %	0.1 % and 0.15 %
Volume flow*	0.5 %, 0.4 %, 0.25 %, and 02 %	0.15 % and 0.11 %	0.4 %, 0.25 % and 0.2 %	0.15 % and 0.11 %
Density for liquids	0.01 kg/l	• 0.002 kg/l • 0.001 kg/l (optional) • 0.0004 kg/l (optional)	0.01 kg/l	• 0.002 kg/l • 0.001 kg/l (optional) • 0.0004 kg/l (optional)
Temperature	1 K	0,5 K	1 K	0,5 K
Measuring accuracy for gases*	1 %	0,5 %	1 %	0,5 %
Permissible measuring medium temperature T_{medium}	−50 to 160 °C (−58 to 320 °F)	−50 to 205 °C (−58 to 400 °F)	−50 to 160 °C (−58 to 320 °F)	−50 to 205 °C (−58 to 400 °F)
Process connection				
Flange DIN 2501 / EN 1092-1	DN 10 to 200; PN 40 to PN 160		—	
Flange ASME B16.5	DN ½ to 8 in; CL150 to CL1500		—	
JIS flange	DN 10 to 200; JIS 10K to 20K		—	
Pipe fitting DIN 11851	DN 10 to 100 (⅜ to 4 in)		DN 20 to 100 (¾ to 4 in)	
Pipe fitting SMS 1145	DN 25 to 80 (1 to 3 in)		—	
Tri-clamp DIN 32676 (ISO 2852)	DN 15 to 100 (½ to 4 in)		DN 20 to 100 (¾ to 4 in)	
Tri-clamp BPE	DN ⅜ to 4 in		DN ⅜ to 4 in	
Female thread DIN ISO 228 and ASME B 1.20.1	DN 15; PN 100		—	
Other connections	On request		On request	
Wetted material	Stainless steel 1.4435 or 1.4404 (AISI 316L), nickel alloy C4 / C22		Stainless steel, polished 1.4404 (AISI 316L) or 1.4435 (AISI 316L)	
IP rating	• Integral mount design: IP 65 / IP 67, NEMA 4X • Remote mount design: IP 65 / IP 67 / IP 68 (sensor only, immersion depth: 5 m), NEMA 4X			
Approvals				
• Explosion protection	ATEX, IECEx, cFMus, INMETRO		ATEX, IECEx, cFMus, INMETRO	
• Hygiene approvals	FDA compliant**		FDA compliant**	
• Legal metrology	OIML R117, MID, devices for legal metrology in accordance with API / AGA			
• Further approvals	At www.abb.com/flow or upon request.			

* Indication of accuracy in % of the measured value

** Material of the wetted parts: 1.4435 or 1.4404 (AISI 316L)

… Overview – models

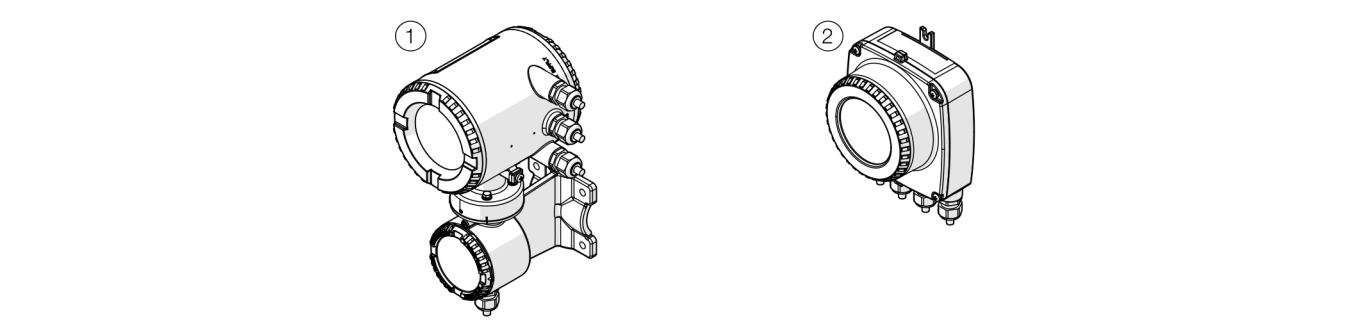

(1) Dual-compartment housing

(2) Single-compartment housing

Figure 2: Transmitter with remote mount design

Transmitter	
Chassis	Integral mount design (see Figure 1, pos. (1) and (2)), remote mount design (see Figure 2, pos. (1) and (2)).
IP rating	IP 65 / IP 67, NEMA 4X
Cable length	Maximum 200 m (656 ft), with remote mount design only
Power supply	100 to 240 V AC (−15%/+10%), 50 / 60 Hz 11 to 30 V DC, nominal voltage: 24 V DC
Outputs in basic version	Current output: 4 to 20 mA active or passive Digital output 1: passive, configurable as pulse, frequency or switch output Digital output 2: passive, configurable as pulse or switch output
Additional optional outputs	The transmitter has two slots in which plug-in cards can be inserted to provide additional inputs and outputs. The following plug-in cards are available: • Current output (maximum two plug-in cards simultaneously) • Active or passive digital output (maximum one plug-in card) • Digital input (maximum one plug-in card) • Modbus® or PROFIBUS DP® interface (maximum of one plug-in card) • 24 V DC loop power supply for active outputs (maximum one plug-in card) • Std. Ethernet card* • Power Over Ethernet – POE card* • Ethernet-APL™**
External output zero return	Yes
External totalizer reset	Yes
Forward / reverse flow metering	Yes
Counter	Yes
Communication	HART® protocol 7.1, Modbus® or PROFIBUS DP® (via plug-in card), EtherNet/IP™, PROFINET®, Modbus® TCP, Webserver over Ethernet*
Empty pipe detection	Yes, via configurable density alarm
Self-monitoring and diagnosis	Yes
Local indicator	Yes
Field optimization for flow and density	Yes
Concentration measurement 'DensiMass'	Yes, optional on models FCB450 and FCH450
'FillMass' filling function	Yes, optional on models FCB450 and FCH450
'VeriMass' function	Yes, optional
'Enhanced Coriolis Control (ECC)' function	Yes, optional

* Std. Ethernet only available in conjunction with the single-compartment housing.

** Ethernet-APL only in conjunction with the dual-compartment housing for Profinet®, Modbus® TCP, web server.

General data

Device description

The CoriolisMaster FCB400, FCH400 is the cost-effective and easy ABB mass flowmeter with a new modular transmitter.

The CoriolisMaster FCB400, FCH400 operates in accordance with the Coriolis principle. The design offers the following benefits:

- Space-saving, robust design.
- Variety of process connections.
- Modular, flexible output concept.

Transmitter with digital signal processor (DSP)

The transmitter for the CoriolisMaster FCB400, FCH400 incorporates a digital signal processor (DSP) that enables high-precision mass flow and density measurements to be taken. The Coriolis sensor signals are immediately converted into digital data without any intermediate analog steps.

Excellent long-term stability and reliability together with fast signal processing are achieved with the new DSP transmitter.

Self-diagnostic functions for the flowmeter sensor and the transmitter, in combination with absolute zero stability, are benefits you can count on to ensure accurate measurements are taken.

The CoriolisMaster FCB400, FCH400 transmitter is particularly well suited for use in the following cases:

- When mass flow needs to be measured to the highest degree of accuracy,
- When the density of the measuring medium is determined,
- When the components of a recipe are mixed together,
- When measuring non-conductive fluids or for example, highly viscous, solid-loaded liquids,
- in filling processes.

SIL-functional safety

Term	Value
DeviceType	CoriolisMaster FCB430, FCB450, FCH430, FCH450 with option 'CS'
Type of Assessment	Verification in accordance with IEC 61508 2, route 1S/1H
SIL capability	SIL2 (Low demand mode)
HFT	0
Component Type	B

Failure Rates		Design
	Integral mount design	Remote mount design
SFF	93.3 %	93.2 %
PFD_{AVG} after 1 year (MTTR 48 hours)	6,91E-04	7,28E-04
PFD_{AVG} after 2 years (MTTR 48 hours)	1,31E-03	1,38E-03
PFD_{AVG} after 4 years (MTTR 48 hours)	2,54E-03	2,68E-03
λ_S	435 FIT	435 FIT
λ_{Dd}	1529 FIT	1616 FIT
λ_{Du}	142 FIT	149 FIT

SAFETY INSTRUCTIONS

The listed failure rates λ_S, λ_{Dd}, λ_{Du} and PFD_{AVG} relate to the failure rates of the Siemens norm SN29500 at an average component temperature of 40 °C (104 °F).
This corresponds to an average ambient temperature of 30 °C (86 °F).

… General data

FillMass batch function

Only for FCB450 / FCH450

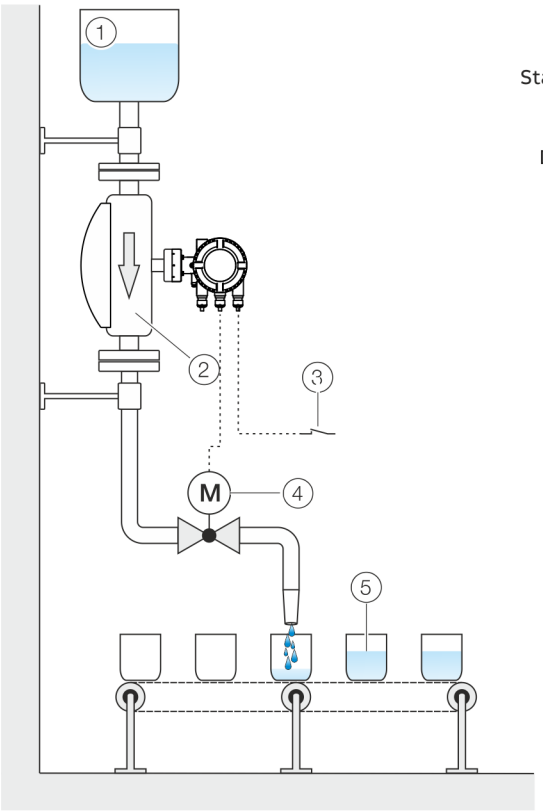

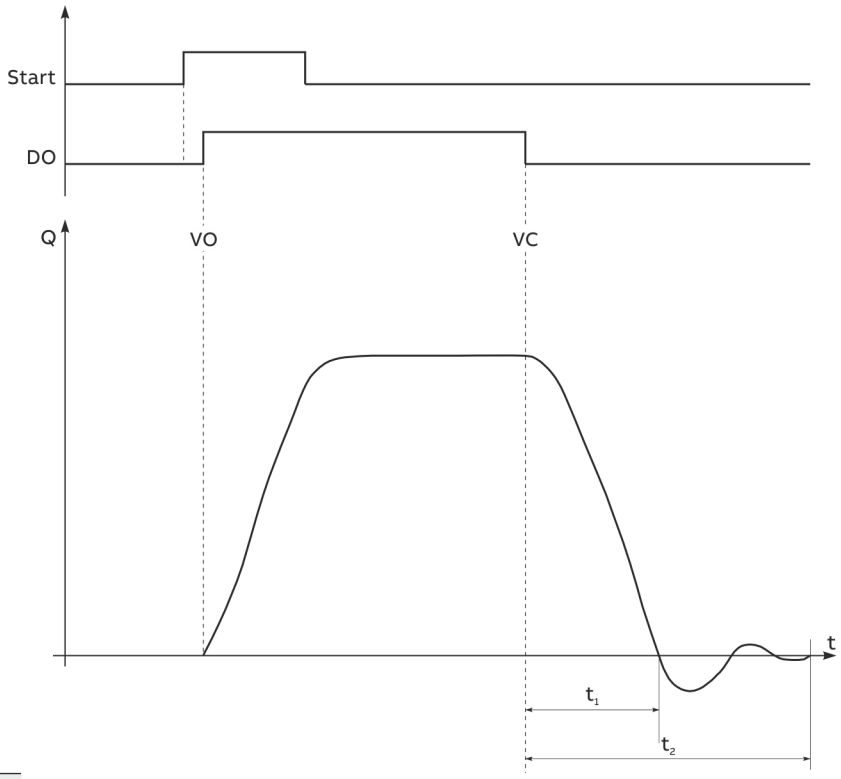

1. Supply tank
2. Sensor
3. Start / stop fill operation (digital input or field bus)
4. Fill valve
5. Filling tank

Start Start of the filling process via field bus or digital input
DO State of the digital output for the fill valve
Q Flow rate
VO Valve open (filling started)
VC Valve closed (fill quantity reached)
t_1 Valve closing time
t_2 Overrun time

Figure 3: FillMass fill function

The integrated FillMass fill function allows filling processes with filling times of > 3 seconds.
For this purpose, the filling quantity is given via an adjustable totalizer.
The fill function is controlled via the HART interface or via the digital input.

The valve is triggered via one of the digital outputs and closed again once the preset filling quantity is reached.
The transmitter measures the overrun quantity and calculates the overrun correction from this.
Additionally, the low flow cut-off can be activated if required.

Concentration measurement DensiMass

The transmitter can calculate the current concentration from the measured density and temperature using concentration matrices.
The following concentration matrices are preconfigured in the transmitter as standard:

- Concentration of sodium hydroxide in water
- Concentration of alcohol in water
- Concentration of sugar in water
- Concentration of maize starch in water
- Concentration of wheat starch in water
- Concentration of antifreeze in water

In addition, the user can enter two user-defined matrices:

- Up to 100 values with one matrix
- Up to 50 values per matrix with two matrices

Calculating standard volumes and standard densities of liquids

If a suitable matrix is available, the DensiMass function also allows the measured volume to be corrected for any selected temperature.
The measured density can also be corrected for a given temperature.
However, this is only possible when measuring liquids and after entering an appropriate matrix.
This correction can also be performed using the default matrices (see above).
The calculated standard volumes and standard densities can also be issued for all other process variables.
The software 'DensiMatrix' is available for the easy input of the matrix.

Accuracy of the concentration measurement

The accuracy of the concentration measurement is determined in the first instance by the quality of the matrix data entered.
However, as the calculation is based on temperature and density (the input variables), the accuracy of the concentration measurement is ultimately determined by the measuring accuracy of the temperature and the density.

Example:

Density of 0% alcohol in water at 20 °C (68 °F): 998.23 g/l
Density of 100 % alcohol in water at 20 °C (68 °F): 789.30 g/l

Concentration	Density
100 %	208.93 g/l
0.48 %	1 g/l
0.96 %	2 g/l
0.24 %	0.5 g/l

Thus, the accuracy class of the density measurement directly determines the accuracy of the concentration measurement.

... General data

Enhanced Coriolis Control (ECC)function

The Enhanced Coriolis Control (ECC)function has been specially developed for demanding applications, such as:

- Liquids with gas phase
- Liquids with rapidly changing densities
- Fill operations with surge phases at the beginning or end
- Liquids with high viscosity

After the ECC function is activated, the device applies a particularly quick control algorithm to control the oscillating tubes in the device and therefore provide significantly better behavior in the applications listed above.

In addition, the ECC function offers a special noise suppression filter for mass flow measurement and density measurement.

In the case of particularly demanding applications, disruptions can thus be actively filtered and the measurement can be implemented in a considerably more stable manner.
For the filters, a variety of time constants between 0.5 s and 8 s can be selected.

Since Coriolis mass flowmeters measure the mass flow and density separately, the CoriolisMaster features a separate filter each for mass flow measurement and density measurement.

Devices for legal metrology in accordance with MID / OIML R117

The Coriolis mass flowmeters CoriolisMaster FCBx50 are type-tested for legal metrology in accordance with MID / OIML R117 in accuracy classes 0.5 and 0.3.

Additional information can be found on the corresponding certificate. The certificate is available in the download area at www.abb.com/flow.

When ordering, select one of the optional order codes:

- CT4 – Approved for official calibration in accordance with MID (OIMLR117 Cl0.5)
- CT3 – Approved for official calibration in accordance with MID (OIMLR117 Cl0.5/0.3)

All Coriolis mass flowmeters FCBx50 for legal metrology receive a 3-point flow rate calibration at the factory, which demonstrates measuring accuracy in accordance with the OIML-R117-2019 guidelines at minimum (Q_{min}), medium and maximum (Q_{max}) flow rates.

Nominal diameter	Q1 (tol. +10 %) [kg/h]	Q2 (tol. ±10 %) [kg/h]	Q3 (tol. −20 %) [kg/h]
DN 15	365	2489	6500
DN 25	1620	10570	27000
DN 50	4550	27335	67000
DN 80	14500	91489	145000
DN 100	23000	124597	290000
DN 150	32000	178053	290000*

* corresponds to approx. 60 % Q_{max}CT

Note
Use in accordance with API / AGAstandards is also possible.

Please observe the additional remarks in the operating and commissioning instruction.

Applications in accordance with API (American Petroleum Institute)

For applications in accordance with API Chapter 5.6, the CoriolisMaster FCB400, FCH400 provides special parameters:

- Calibration Pressure: Measuring medium pressure at which the device was calibrated at ABB.
- Calibration Temp.: Measuring medium temperature at which the device was calibrated at ABB.
- Pressure Level: Parameters for entry of the current operating pressure in the device by the user.
- Flow Compens. factor: Display / output of the current compensation factor for mass flow calculation.
- Density Comp. factor: Display / output of the current compensation factor for density calculation.
- P.Comp.Status (PECI): In accordance with API, the user can set the following states:
  - 1: CT: Compensation in the Coriolis flowmeter based on the current pressure entered in the ‘Pressure Level’ parameter.
  - 2: TD: Compensation in the Coriolis flowmeter switched off – compensation is performed externally (Tertiary Device)
  - 3: OS: Compensation in the Coriolis flowmeter switched off – compensation is not performed on site (Off Site)
  - 4: NA: Compensation in the Coriolis flowmeter switched off – compensation is not deemed to be necessary, since the device is operating at a pressure for which the device has been proved.

VeriMass erosion monitor

The integrated diagnosis function VeriMass allows the status of the meter tube to be monitored. This enables changes due to material erosion and the formation of deposits on the meter tube walls to be identified at an early stage.
If the set limit value is exceeded, an alarm is triggered, for example via the programmable digital output or HART, depending on the configuration.
The limit value for the erosion monitor can be set either automatically or manually.

Automatic adjustment

The transmitter monitors the sensor's driver current over a prolonged period and creates a ‘fingerprint’ for the relevant application. The transmitter generates a corresponding tolerance value for deviations in the driver current.
The transmitter compares the behavior of the driver current with the generated fingerprint and triggers the relevant error message in the event of prolonged deviations.

Manual adjustment

For applications where automatic adjustment of the erosion monitor does not provide a satisfactory result, the erosion monitor can be adjusted manually.
For more information, please contact ABB Service or the sales organization.

Flowmeter sensor

General installation conditions

Installation location and assembly

Note the following points when selecting the installation location and when mounting the sensor:

- The ambient conditions (IP rating, ambient temperature range $T_{ambient}$) of the device must be adhered to at the installation location.
- Sensors and transmitters must not be exposed to direct sunlight. If necessary, provide a suitable means of sun protection on site. The limit values for ambient temperature $T_{ambient}$ must be adhered to.
- Prevent the sensor from coming into contact with other objects.
- The device is designed for industrial applications. No special EMC protective measures are required if the electromagnetic fields and interference at the installation location of the device comply with 'Best Practice' (in accordance with the standards listed in the declaration of conformity).
  Maintain a suitable distance from electromagnetic fields and interference that extend beyond the usual dimensions.

Seals

Users are responsible for selecting and mounting suitable gaskets (material, shape).
Note the following points when selecting and mounting gaskets:

- Use gaskets made from a material that is compatible with the measuring medium and measuring medium temperature.
- Gaskets must not extend into the flow area, since possible turbulence may influence the accuracy of the device.

Calculating pressure loss

Pressure loss depends on the properties of the medium and the flow rate.
A good aid for pressure loss calculation is the Online ABB Product Selection Assistant (PSA) for flow at www.abb.com/flow-selector.

Brackets and supports

No special supports or damping are required for the device when the device is used and installed as intended.
In systems designed in accordance with 'Best Practice', the forces acting on the device are already sufficiently absorbed. This is also true of devices installed in series or in parallel.
For heavier devices, it is advisable to use additional supports / brackets on site. Doing this prevents damage to the process connections and piping from lateral forces.
Please observe the following points:

- Mount two supports or brackets symmetrically in the immediate vicinity of the process connections.
- Do not fasten any supports or brackets to the housing of the flowmeter sensor.

Note

For increased vibration load, such as for example on ships, the use of the 'CL1' marine design is recommended.

Inlet section

The sensor does not require any inlet section.
The devices can be installed directly before/after manifolds, valves or other equipment, provided that no cavitation is caused by this equipment.

Installation position / installation conditions

The flowmeter operates in any mounting position.
Depending on the measuring medium (liquid or gas) and the measuring medium temperature, certain mounting positions are preferable to others.For this purpose, consider the following examples.
The preferred flow direction is indicated by the arrow on the sensor.The flow will be displayed as positive.
The specified measuring accuracy can be achieved only in the calibrated flow direction (for forward flow calibration, this is only in the direction of the arrow; for the optional forward flow and reverse flow calibration, this can be in both flow directions).

Liquid measuring media

Observe the following points to avoid measuring errors:

- The meter tubes must always be completely filled with the measuring medium.
- The gases dissolved in the measuring medium must not leak out. To safeguard this, a minimum back pressure of 0.2 bar (2.9 psi) is recommended.
- The minimum vapor pressure of the measuring medium must be maintained when there is negative pressure in the meter tube or when liquids are gently simmering.
- During operation, there must be no phase transitions in the measuring medium.

Vertical installation

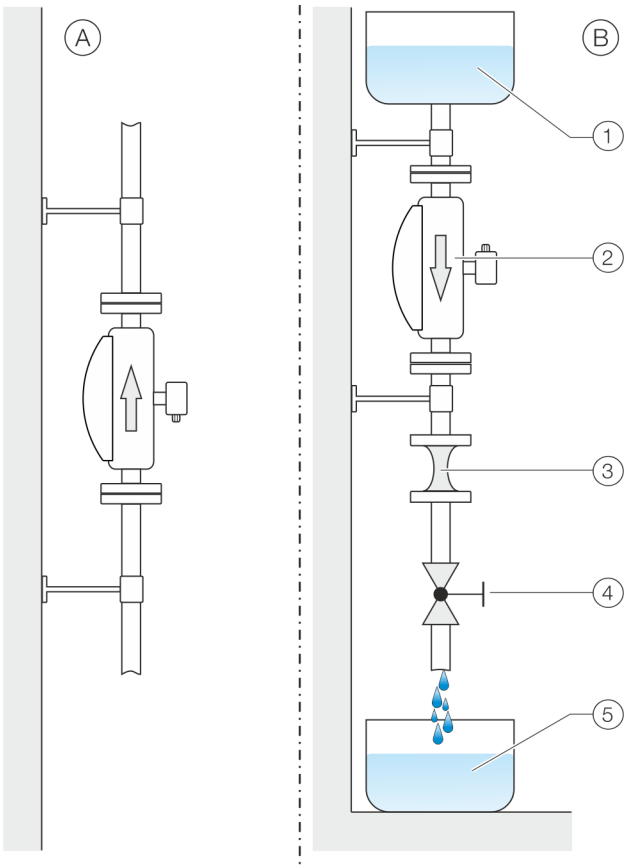

(1) Supply tank
(2) Sensor
(3) Piping constriction / orifice
(4) Turn-off device
(5) Filling tank

Figure 4: Vertical installation

(A) For vertical installation in a riser, no special measures are required.
(B) For vertical installation in a downpipe, a piping constriction or an orifice must be installed below the sensor. Doing this prevents the sensor from draining during the measurement.

Horizontal installation

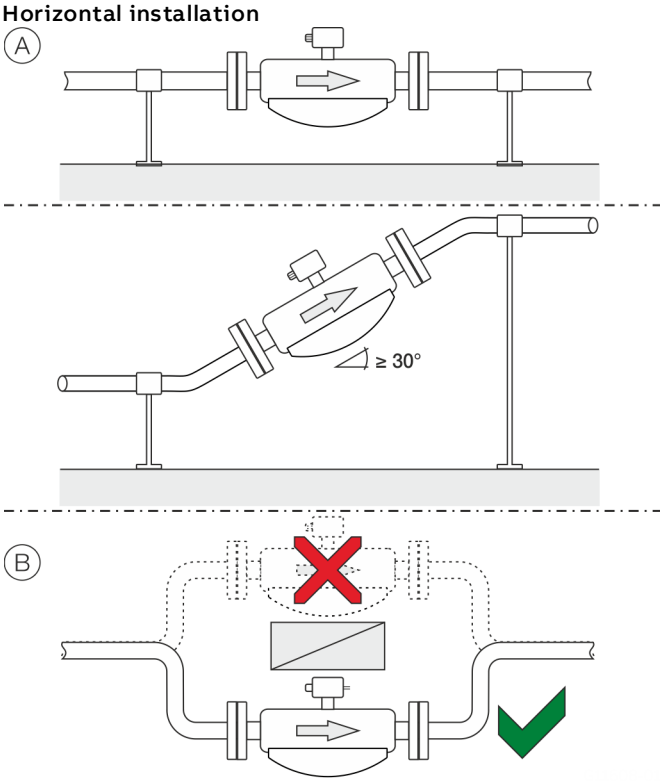

Figure 5: Horizontal installation

(A) For liquid measuring media and horizontal installation, the transmitter and terminal box must point upward. If a self-draining installation is required, the sensor must be mounted at an incline of ≥ 30°.
(B) Installing the sensor at the highest point of the piping leads to an increased number of measuring errors due to the accumulation of air or the formation of gas bubbles in the meter tube.

… Flowmeter sensor

… Installation position / installation conditions

Gaseous measuring media

Observe the following points to avoid measuring errors:

- Gases must be dry and free of liquids and condensates.
- Avoid the accumulation of liquids and the formation of condensate in the meter tube.
- During operation, there must be no phase transitions in the measuring medium.

If there is a risk of condensate formation when using gaseous measuring media, note the following:
Ensure that condensates cannot accumulate in front of the sensor.
If this cannot be avoided, we recommend that the sensor is installed vertically with a downward flow direction.

Vertical installation

For vertical installation, no special measures are required.

Horizontal installation

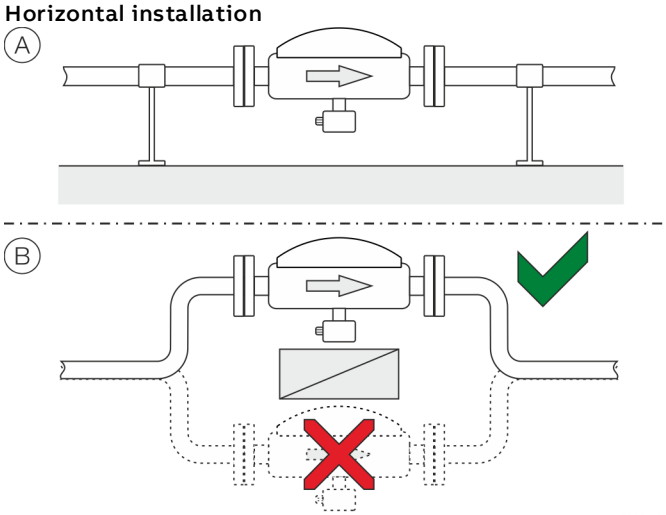

Figure 6: Horizontal installation

Ⓐ For gaseous measuring media and horizontal installation, the transmitter and terminal box must point downward.
Ⓑ Installing the sensor at the lowest point of the piping leads to an increased number of measuring errors due to the accumulation of liquid or the formation of condensates in the meter tube.

Sensor insulation

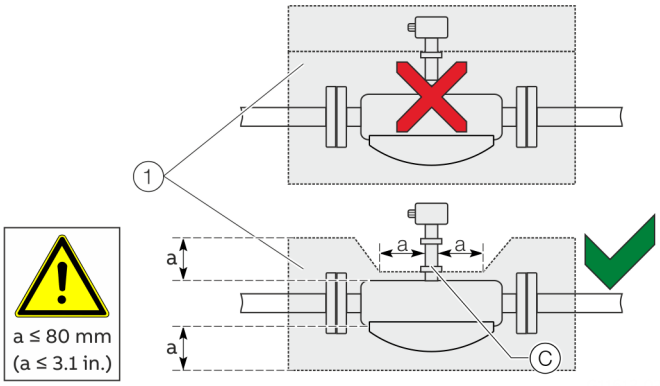

① Insulation

Figure 7: Installation at T_{medium} –50°to 205 °C (–58 to 400 °F)

The sensor may only be insulated in conjunction with the option TE1 'Tower length extension – meter insulation capability' or TE2 'Tower length extension – meter insulation capability, potted' as shown in Figure 7.

Heat tracing of the sensor

- When operating the sensor in conjunction with heat tracing, the permissible measuring medium temperature T_{medium} at point Ⓒ (Figure 7) may not be exceeded at any time!
- When used in potentially explosive atmospheres the device temperature classes, Section **Temperature classes and permissible measuring medium temperature** from page 94 onwards must be complied with!

Turn-off devices for the zero point adjustment

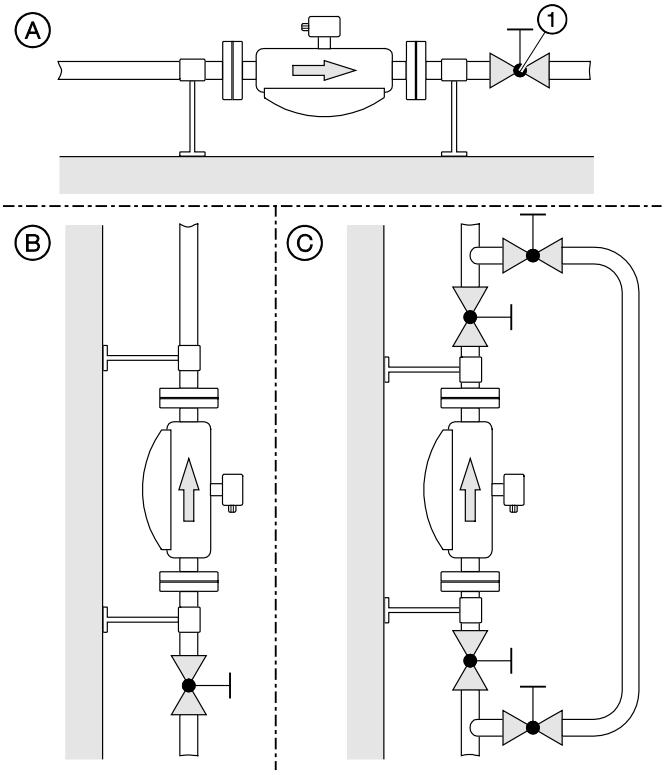

① Turn-off device

Figure 8: Mounting options for turn-off devices (example)

To guarantee the conditions for zero point balancing under operating conditions, turn-off devices are required in the piping:

- Ⓐ At least on the outlet side when the transmitter is mounted in horizontal position
- Ⓑ At least on the inlet side when the transmitter is mounted in vertical position.
- Ⓒ In order to perform balancing during an ongoing process, it is advisable to mount a bypass pipe.

Devices for legal metrology

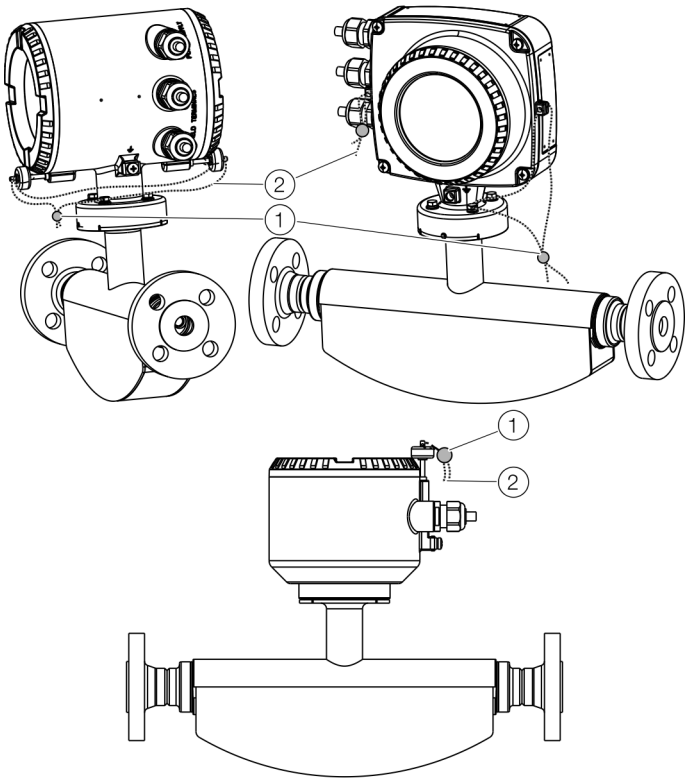

① Lead seal ② Lead seal wire

Figure 9: Sealing in accordance with MID / OIML R117 (example)

On devices for legal metrology, the hardware write protection must be activated after commissioning in many cases. This prevents a change in the parameterization of the devices.

To prevent deactivation of the hardware write protection or other manipulations during operation, the transmitter housing and the sensor housing connection box (with remote mount design) must be sealed.
For this purpose, a seal kit is available at ABB.
For the assembly of the seal, please observe the separate 'IN/FCX100/FCX400/MID/OIML-XA' instructions.

... Flowmeter sensor

Designs

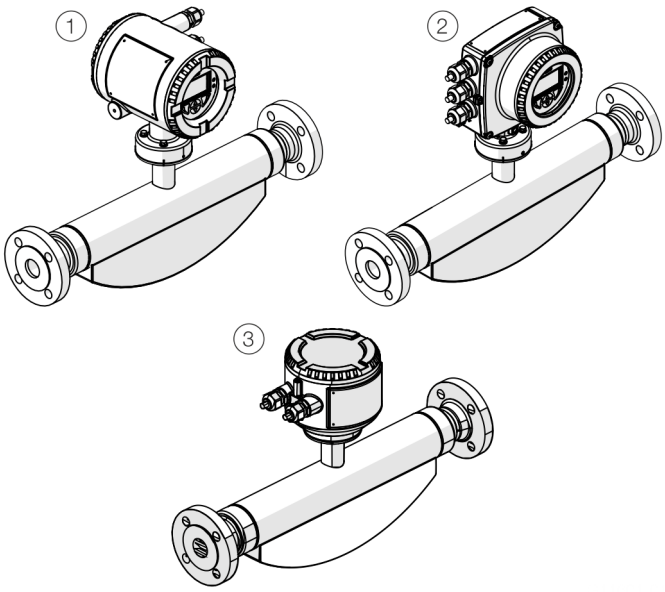

1. Integral mount design with dual-compartment transmitter housing
2. Integral mount design with single-compartment transmitter housing
3. Remote mount design (without transmitter)

Figure 10: Sensor FCB4xx / FCH4xx

Note
For additional information on dependencies and restrictions, and for help on product selection, please refer to the Online Product Selection Assistant (PSA) at www.abb.us/flow-selector.

Nominal diameter and measuring range

Nominal diameter	Q_{max} in kg/h (lb/h)
DN 15 (½ in)	0 to 8,000 (0 to 17,637)
DN 25 (1 in)	0 to 35,000 (0 to 77,162)
DN 50 (2 in)	0 to 90,000 (0 to 198,416)
DN 80 (3 in)	0 to 250,000 (0 to 551,156)
DN 100 (4 in)	0 to 520,000 (0 to 1,146,404)
DN 150 (6 in)	0 to 860,000 (0 to 1,895,975)

Recommended flow range

Fluids:

- The recommended flow range is 5 to 100 % of Q_{max}.
- Flow rates < 1 % of Q_{max} should be avoided.

Gases:

- The flow velocity of gases in the meter tube should not up-scale 0.3 mach [approx. 100 m/s (328 ft/s)].
- Increased deviation in repeatability should be expected from a flow velocity of approx. 80 m/s (262 ft/s).
- The maximum flow range of gases depends on the operating density. Appropriate dimensioning guidelines are available at www.abb.com/flow .

Measuring accuracy

Reference conditions

Calibration fluid	Water • Temperature: 25 °C (77 °F) ± 5 K • Pressure: 2 to 4 bar (29 to 58 psi)
Ambient temperature	25 °C (77 °F) +10 K / −5 K
Power supply	Line voltage in accordance with name plate U_N ± 1 %
Warm-up phase	30 min
Installation	• Installation in accordance with **Assembly Notes** and **Mounting positions** • No visible gas phase • No external mechanical or hydraulic disturbances, particularly no cavitation
Output calibration	Pulse output

Measured error and repeatability

The measured error and repeatability are calculated as follows for the flow:

Scenario 1:
If

$$\text{Flow rate} \geq \frac{\text{Zero stability}}{(\text{base accuracy} / 100)}$$

Then:
- Maximum measured error:
  ± Base accuracy in % of measured value.
- Repeatability:
  ±½ × base accuracy in % of measured value.

Scenario 2:
If

$$\text{Flow rate} < \frac{\text{Zero stability}}{(\text{base accuracy} / 100)}$$

Then:
- Maximum measured error:
  ± (zero stability / measured value) x 100 % of measured value.
- Repeatability:
  ± ½ × (zero point stability / measured value) × 100% of measured value.

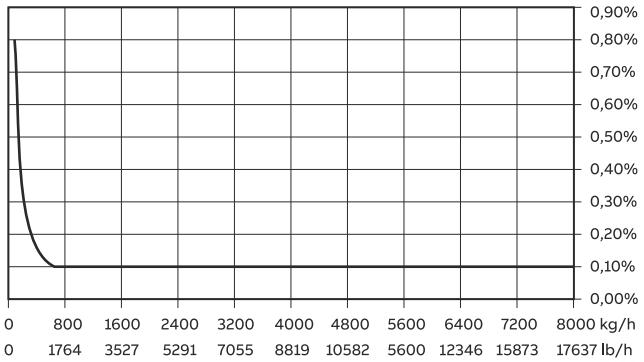

Figure 11: Measured error FCB450 DN 15 (example)

FCx450			
Measurement dynamic	**Flow rate**	**Measured error***	**Repeatability***
100:1	80 kg/h (176.4 lb/h)	≤ 0.8 %	0.4 %
50:1	160 kg/h (352.7 lb/h)	≤ 0.4 %	0.2 %
10:1	800 kg/h (1763.7 lb/h)	≤ 0.1 %	0.05 %
2:1	4000 kg/h (8818.5 lb/h)	≤ 0.1 %	0.05 %
1:1	8000 kg/h (17637 lb/h)	≤ 0.1 %	0.05 %

* Enter measured error and repeatability as % of measured value

... Flowmeter sensor

... Measuring accuracy

Measured error and base accuracy for liquids		
	FCx430	**FCx450**
Order code flow calibration	A, B, E, F, J, K, N	C, D, L, M
Order code density calibration	1	3, 4, 5
Mass flow*	± 0.5% ± 0.4% ± 0.25% ± 0.2%	± 0.15% ± 0.1%
Volume flow*	±0.4 % ± 0.25 % ± 0.2 %	± 0.15 % ± 0.11 %
Density	0.010 kg/l**	0.002 kg/l** 0.001 kg/l** 0.0004 kg/l**
Repeatability for flow rate	Refer to **Measured error and repeatability** on page 15.	
Repeatability for density	0.002 kg/l**	0.002 kg/l** 0.001 kg/l** 0.0004 kg/l**
Temperature	1 K	0.5 K

Measured error and base accuracy for gases		
	FCx430	**FCx450**
Order code flow calibration	A, B, E, J, K, N	C, D, L, M
Mass flow*	±1 %	±0.5 %
Temperature	1 K	0.5 K

* Enter measured error and base accuracy as % of measured value

** For the density range from 0.5 to 1.8 kg/dm³

Zero point stability

Nominal diameter	FCx430	FCx450
Order code flow calibration	A, B, E, F, J, K, N	C, D, L, M
Order code density calibration	1	3, 4
DN 15 (½ in.)	0.64 kg/h (1.41 lb/h)	
DN 25 (1 in.)	2.16 kg/h (4.76 lb/h)	
DN 50 (2 in.)	7.20 kg/h (15.87 lb/h)	
DN 80 (3 in.)	20 kg/h (44 lb/h)	
DN 100 (4 in.)	41.6 kg/h (91.7 lb/h)	
DN 150 (6 in.)	68.8 kg/h (151.68 lb/h)	

Effect of the medium temperature

	FCx430	FCx450
Order code flow calibration	A, B, E, J, K, N	C, D, L, M
Order code density calibration	1	3, 4
On flow rate	< ±0.005 % of Q_{max} / 1 K (1.8 °F)	< ±0.0015 % of Q_{max} / 1 K (1.8 °F)
On density	< 0.0001 kg/dm³ per 1 K (1.8 °F)	

Effect of the operating pressure

Nominal diameter	Flow*	Density [kg/dm³ / bar]
DN 15 (½ in.)	-0.002 %	No effect
DN 25 (1 in.)	-0.013 %	0.00035
DN 50 (2 in.)	-0.010 %	0.00027
DN 80 (3 in.)	-0.006 %	0.00019
DN 100 (4 in.)	-0.009 %	0.00024
DN 150 (6 in.)	-0.035 %	0.00045

* Influence of operating pressure as % of measured value per bar (1 bar = 14.5 psi)

Specifications

Pressure loss

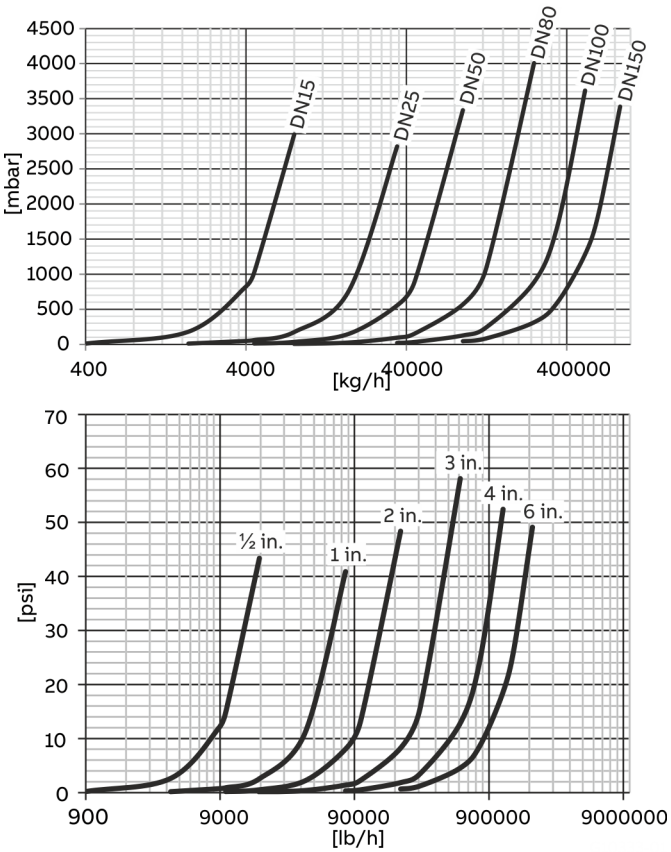

Figure 12: Pressure loss curve (measured with water, viscosity: 1 mPas)

Viscosity range

For dynamic viscosities ≥ 1 Pas (1000 mPas = 1000 cP), please consult ABB.

Temperature limits °C (°F)

Note

When using the device in potentially explosive atmospheres, note the additional temperature data in **Temperature data** on page 93!

Measuring medium temperature T_{medium}

- FCx430: −50 to 160 °C (−58 to 320 °F)
- FCx450: −50 to 205 °C (−58 to 401 °F)

In devices with order code 'Extended tower length – TE3', the measuring medium temperature must be limited to a maximum of 140 °C (284 °F) from an ambient temperature of ≥ 65 °C (149 °F).

Ambient temperature $T_{amb.}$

- Standard: −20 to 70 °C (−4 to 158 °F)
- Optional: −40 to 70 °C (−40 to 158 °F)

Process connections

For an overview of available process connection versions, see **Overview – models** on page 3.

Pressure ratings

The maximum permissible operating pressure is determined by the respective process connection, the temperature of the medium to be measured, the screws, and the gasket material.

For an overview of available pressure ratings, see **Overview – models** on page 3.

Pressure Equipment Directive

Conformity assessment in accordance with Category III, fluid group 1, gas The pressure equipment is designed for load changes in accordance with the AD2000 specification sheet S1 Chapter 1.4 a) and b).

Note the corrosion resistance of the meter tube materials in relation to the measuring medium.

... Flowmeter sensor

... Specifications

CRN approval

Certain device versions and connection options have CRN approval under number 'CRN 0F15656.5'.
Please contact ABB for more information.

Installation lengths in accordance with NAMUR standards

The CoriolisMaster FCB400, FCH400 is the ideal device for use in accordance with NAMUR standards.
While also conforming to other standards, the device can be ordered with installation lengths in accordance with NAMUR standards.
The exact lengths can be found in the tables in **Devices DN 15 to 150 (½ to 6 in) in NAMUR standard installation lengths (order option S5, S7)** on page 32 (for integral mount design) and **Devices DN 15 to 150 (½ to 6 in) in NAMUR standard installation lengths (order option S5, S7)** on page 47 (for remote mount design).

Meter tube inside diameter

Inside diameter of the meter tube of the Coriolis mass flowmeter CoriolisMaster FCB400, FCH400.

Nominal diameter	Meter tube inside diameter
DN 15 (½ in)	2 × 8 mm (2 x 0.31 in)
DN 25 (1 in)	2 × 16 mm (2 x 0.63 in)
DN 50 (2 in)	2 × 23.7 mm (2 x 0.93 in)
DN 80 (3 in)	2 × 36.62 mm (2 x 1.44 in)
DN 100 (4 in)	2 × 52.51 mm (2 x 2.07 in)
DN 150 (6 in)	2 × 68.9 mm (2 x 2.71 in)

IP rating

In accordance with EN60529: IP 65 / IP 67, NEMA 4X

Note

The sensor in remote mount design is approved for an immersion depth up to 5 m (16.4 ft) in accordance with IP rating IP 68.

Materials for the transmitter terminal box

Integral mount design	
Material	Cast aluminum or stainless steel 1.4409 (ASTM CF3M)
Paint	Paint coat ≥ 80 µm thick, RAL 9002 (light gray)
Cable gland**	Polyamide or stainless steel*

Remote mount design	
Material	Cast aluminum
Paint	Mid-section: Paint coat ≥ 80 µm thick, RAL 7012 (basalt gray) Front cover / rear cover: RAL 9002 (light gray)
Cable gland**	Polyamide

* In the case of explosion-proof design for −40 °C (−40 °F) ambient temperature)

** Cable gland with M20 x 1.5 or NPT thread, to be selected via the order number.

Materials for the sensor

Wetted components	
FCB400	**FCH400**
Stainless steel 1.4435 or 1.4404 (AISI 316L)	Stainless steel 1.4435 or 1.4404 (AISI 316L)
C4* nickel alloy (2.4610) or C22 nickel – alloy (2.4602)	
Optional: Manufacture in accordance with NACE MR0175 and MR0103 (ISO 15156)	

Sensor housing**
Stainless steel 1.4404 (AISI 316L), 1.4301 (AISI 304), 1.4308 (ASTM CF8)

* Hastelloy C is a registered trademark of Haynes International. C4 and C22 nickel alloys are equivalent to Hastelloy C4 and Hastelloy C22.

** If the wetted parts of the sensor are made from nickel alloy then parts of the sensor housing (splitter) are also manufactured from nickel alloy. However, the prevailing parts remain manufactured from the specified material.

Roughness for flanges in accordance with EN 1092-1, ASME and JIS

	EN 1092-1 B1	EN 1092-1 B2
Pressure rating	≤ PN 40	≥ PN 63
Mean roughness value Ra	3.2 to 12.5 µm	0.8 to 3.2 µm
Roughness depth Rz	12.5 to 50.0 µm	3.2 to 12.5 µm

	ASME B 16.5	JIS B 2220	JIS 10K
Mean roughness value Ra	0.8 to 3.2 µm	3.2 to 6.3 µm	3.2 to 6.3 µm
Roughness depth Rz	3.2 to 12.5 µm	12.5 to 25 µm	12.5 to 25 µm

Material load for process connections

Note

You can reference the availability of the different process connections in the Online ABB Product Selection Assistant (PSA) for flow www.abb.com/flow-selector.

- Not all connections shown here are available in all the devices and designs.
- The permissible material load of the device can additionally differ from the material load of the connection. The permissible limit values (pressure rating / measuring medium temperature T_{medium}) can be found on the name plate.

Design	Nominal diameter	PS_{max}	TS_{max}	TS_{min}
Pipe fitting	DN 15 to DN 40	40 bar	140 °C	−40 °C
(DIN 11851)	(½ to 1½ in)	(580 psi)	(284 °F)	(−40 °F)
	DN 50 to DN 100	25 bar	140 °C	−40 °C
	(2 to 4 in)	(363 psi)	(284 °F)	(−40 °F)
Pipe fitting	DN 25 to DN 80	6 bar	140 °C	−40 °C
(SMS 1145)	(1 to 3 in)	(87 psi)	(284 °F)	(−40 °F)
Tri-Clamp	DN 15 to DN 50	16 bar	140 °C	−40 °C
(DIN 32676)	(½ to 2 in)	(232 psi)	(284 °F)	(−40 °F)
	DN 65 to DN 100	10 bar	140 °C	−40 °C
	(2½ to 4 in)	(145 psi)	(284 °F)	(−40 °F)
ASME BPE Clamp	< DN 80	11.4 bar	121 °C	−40 °C
	(< 3 in)	(165.3 psi)	(249,8 °F)	(−40 °F)
	DN 80	10.3 bar	121 °C	−40 °C
	(3 in)	(149.4 psi)	(249.8 °F)	(−40 °F)
	DN 100	8.6 bar	121 °C	−40 °C
	(4 in)	(124.7 psi)	(249.8 °F)	(−40 °F)
NPT female thread	DN 15 (½ in)	177 bar	150 °C	−40 °C
	CrNi steel 1.4404	(2567.2 psi)	(302 °F)	(−40 °F)
	DN 15 (½ in)	163 bar	205 °C	−40 °C
	CrNi steel 1.4404	(2364.1 psi)	(401 °F)	(−40 °F)
	DN 15 (½ in)	267 bar	150 °C	−40 °C
	HC22 2.4602	(3872.5 psi)	(302 °F)	(−40 °F)
	DN 15 (½ in)	243 bar	205 °C	−40 °C
	HC22 2.4602	(3524.4 psi)	(401 °F)	(−40 °F)

Material load curves for flange devices

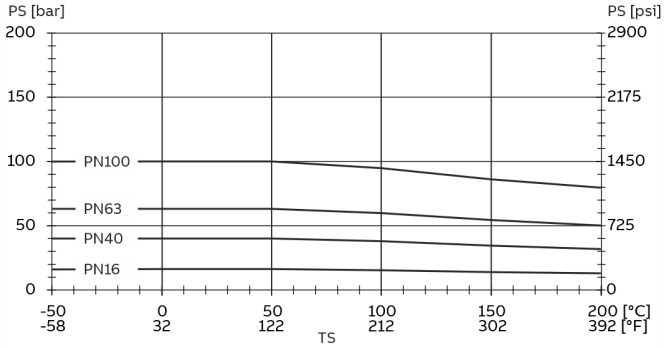

Figure 13: Stainless steel DIN flange 1.4404 (316L) up to DN 200 (8 in.)

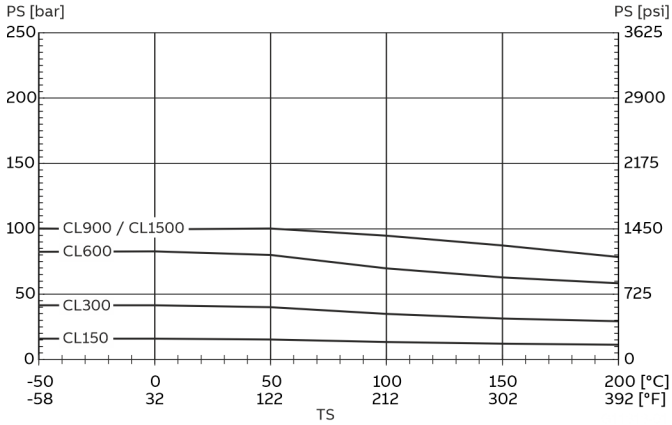

Figure 14: Stainless steel ASME flange 1.4404 (316L) up to DN 200 (8 in.)

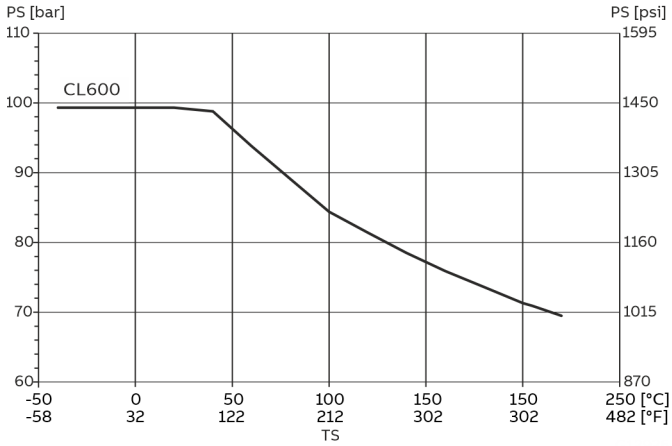

PS bar (psi)	TS °C (°F)	PS bar (psi)	TS °C (°F)
99.3 (1440.2)	−40 (−40)	81.4 (1.180.6)	120 (248)
99.3 (1440.2)	0 (32)	78.5 (1138.5)	140 (284)
99.3 (1440.2)	20 (68)	75.9 (1100.8)	160 (320)
99.8 (1447.5)	40 (104)	73.6 (1067.5)	180 (356)
93.8 (1360.5)	60 (140)	71.3 (1034.1)	200 (392)
89.1 (1292.3)	80 (176)	70.9 (1028.3)	205 (401)
84.4 (1224.1)	100 (212)	69.5 (1008.0)	220 (428)

Figure 15: Stainless steel ASME flange 1.4401 (F316) up to DN 200 (8 in.)

... Flowmeter sensor

... Material load for process connections

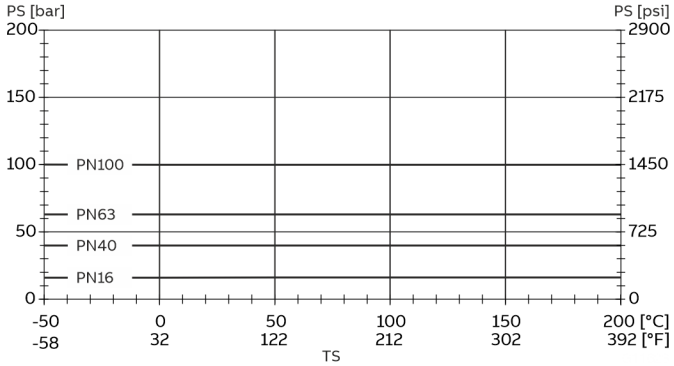

Figure 16: Nickel alloy DIN flange up to DN 200 (8 in)

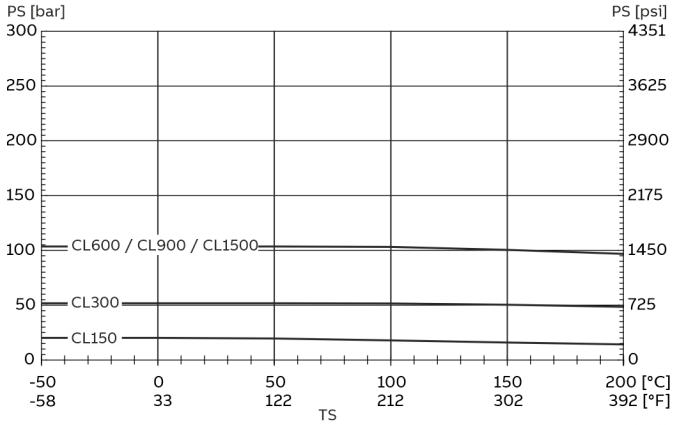

Figure 17: Nickel alloy ASME flange up to DN 200 (in.)

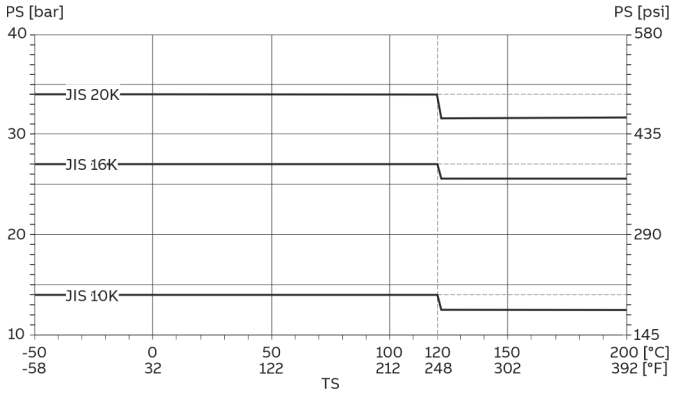

Figure 18: Stainless steel JIS B2220 flange 1.4435 or 1.4404 (AISI 316L) or nickel alloy

Dimensions for devices with integral mount design

Devices with single-compartment transmitter housing

In integral mount design devices, the height (E / E1) and the dimensions provided in Figure 19 differ from the dimensions of the devices with dual-compartment transmitter housings.

- To the height (E / E1), 13 mm (0.51 in.) must be added.
- All other dimensions and the weight are unchanged.

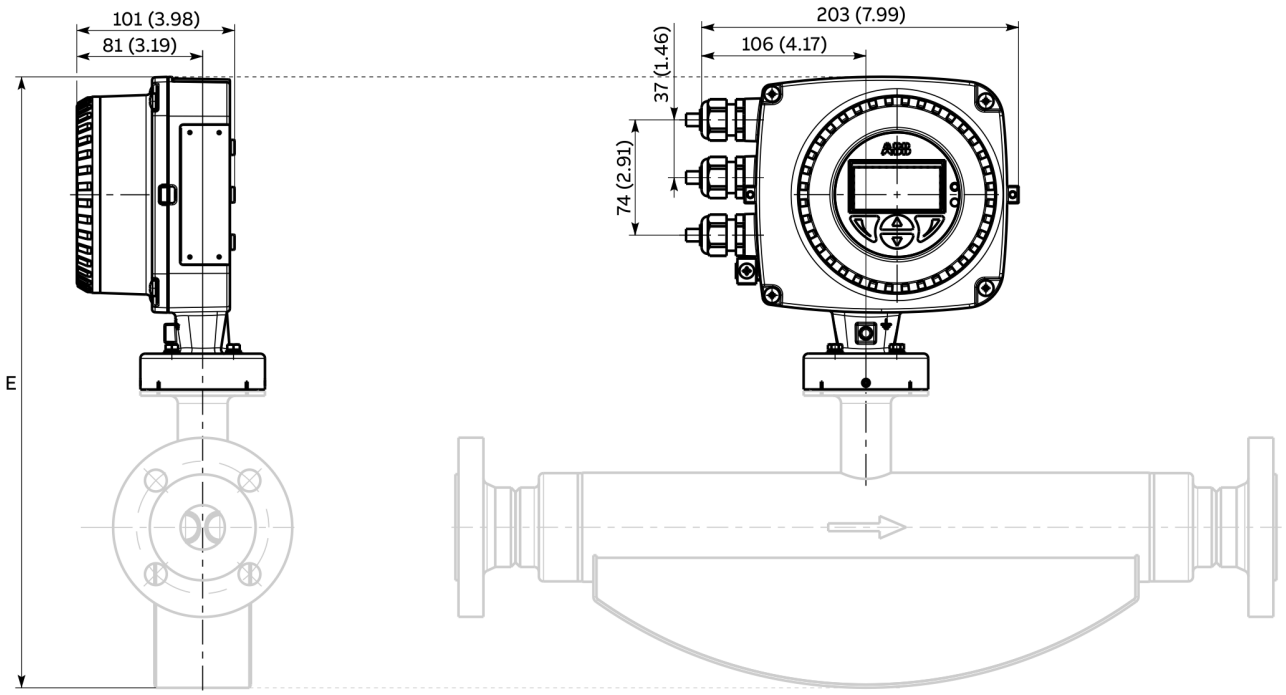

Figure 19: Integral mount design with single-compartment transmitter housing

... Flowmeter sensor

... Dimensions for devices with integral mount design

Devices with meter tube nominal DN 15 to 50 (½ to 2 in) and flange DN 10 to 65 (⅜ to 2½ in)

Sensor with wetted parts made from stainless steel.

All dimensions and weights are specified in mm (in) or kg (lb).

Standard Version

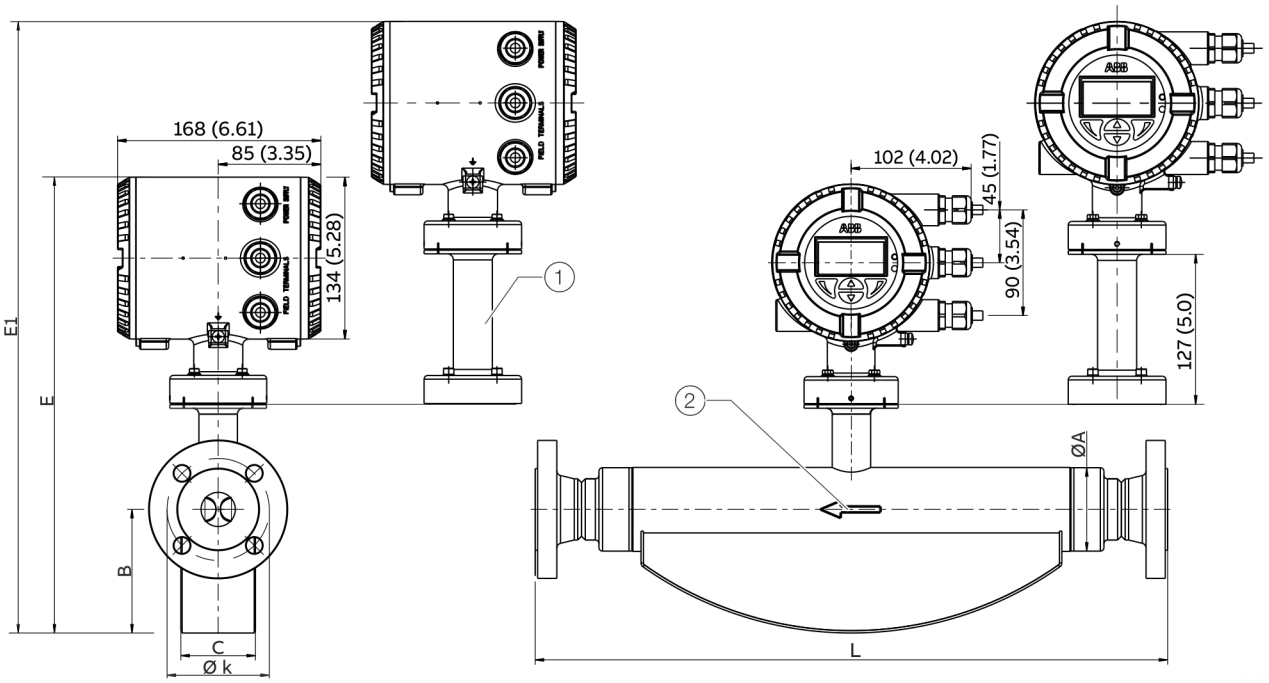

Marine version – CL1

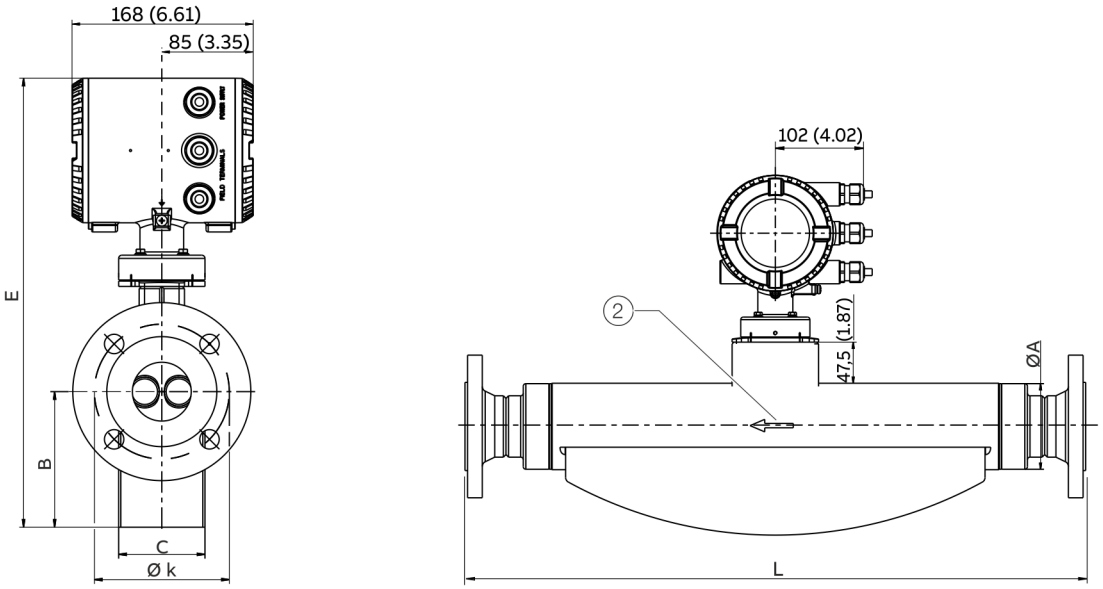

(1) '**Extended tower length – TE1, TE2**' option or '**Burst pressure limits of the burst-proof sensor housing – PR5, PR6, PR7**' option

(2) Flow direction

Figure 1: Integral mount design with dual-compartment transmitter housing

Meter tube nominal diameter DN 15 (½ in)									
DN / process connection		**L**	**Ø k**	**Ø A**	**B**	**C**	**E**	**E1***	**Weight max.**
10 (⅜)	PN 40 (EN 1092-1 B1)	385 (15.2)	60 (2.4)	44.5 (1.8)	80 (3.2)	49 (1.9)	345 (13.58)	472 (18.58)	13 (28.7)
	JIS 10K	385 (15.2)	65 (2.6)						
	JIS 16K	385 (15.2)	65 (2.6)						
	JIS 20K	385 (15.2)	65 (2.6)						
15 (½)	PN 40 (EN 1092-1 B1)	385 (15.2)	65 (2.6)						
	PN 63 (EN 1092-1 B2)	403 (15.9)	75 (3.0)						
	PN 100 (EN 1092-1 B2)								
	CL150 (ASME B16.5)	435 (17.13)	60.5 (2.4)						
	CL300 (ASME B16.5)	421 (16.6)	66.5 (2.6)						
	CL600 (ASME B16.5)								
	CL900 (ASME B16.5)		82.6 (3.3)						
	CL1500 (ASME B16.5)								
	JIS 10K	385 (15.2)	70 (2.8)						
	JIS 16K	385 (15.2)	70 (2.8)						
	JIS 20K	385 (15.2)	70 (2.8)						
20 (¾)	PN 40 (EN 1092-1 B1)	421 (16.6)	75 (3.0)						
	CL150 (ASME B16.5)	421 (16.6)	69.9 (2.8)						
	JIS 10K	421 (16.6)	75 (3.0)						
	JIS 16K	421 (16.6)	75 (3.0)						
	JIS 20K	421 (16.6)	75 (3.0)						

* Standard design: Devices with '**Extended tower length – TE1, TE2**' option or '**Burst pressure limits of the burst-proof sensor housing – PR5, PR6, PR7**' option

L dimension tolerance: +0 / −3 mm (+0 / −0.118 in)

… Flowmeter sensor

… Dimensions for devices with integral mount design

Meter tube nominal diameter DN 25 (1 in)									
DN / process connection		**L**	**Ø k**	**Ø A**	**B**	**C**	**E**	**E1***	**Weight max.**
20 (¾)	PN 40 (EN 1092-1 B1)	576 (22.7)	75 (3.0)	69.5 (2.74)	103 (4.06)	62 (2.44)	386 (15.2)	513 (20.20)	15 (33.1)
	CL150 (ASME B16.5)	575 (22.6)	69.9 (2.8)						
	JIS 10K	576 (22.7)	75 (3.0)						
	JIS 16K	576 (22.7)	75 (3.0)						
	JIS 20K	576 (22.7)	75 (3.0)						
25 (1)	PN 40 (EN 1092-1 B1)	525 (20.7)	85 (3.3)						
	PN 63 (EN 1092-1 B2)	564 (22.2)	100 (3.9)						
	PN 100 (EN 1092-1 B2)								
	CL150 (ASME B16.5)	575 (22.6)	79.2 (3.1)						
	CL300 (ASME B16.5)	576 (22.7)	88.9 (3.5)						
	CL600 (ASME B16.5)								
	CL900 (ASME B16.5)	576 (22.7)	101.6 (4.0)						
	CL1500 (ASME B16.5)								
	JIS 10K	525 (20.7)	90 (3.54)						
	JIS 16K	525 (20.7)	90 (3.54)						
	JIS 20K	525 (20.7)	90 (3.54)						
40 (1½)	PN 40 (EN 1092-1 B1)	576 (22.7)	110 (4.33)						
	PN 63 (EN 1092-1 B2)	572 (22.5)	125 (4.92)						
	PN 100 (EN 1092-1 B2)								
	CL150 (ASME B16.5)	576 (22.7)	98.6 (3.88)						
	CL300 (ASME B16.5)	576 (22.7)	114.3 (45.0)						
	CL600 (ASME B16.5)								
	JIS 10K	576 (22.7)	105 (4.13)						
	JIS 16K	576 (22.7)	105 (4.13)						
	JIS 20K	576 (22.7)	105 (4.13)						

* Standard design: Devices with '**Extended tower length – TE1, TE2**' option or '**Burst pressure limits of the burst-proof sensor housing – PR5, PR6, PR7**' option

L dimension tolerance: +0 / −3 mm (+0 / −0.118 in)

Meter tube nominal diameter DN 50 (2 in)									
DN / process connection		**L**	**Ø k**	**Ø A**	**B**	**C**	**E**	**E1***	**Weight max.**
40 (1½)	PN 40 (EN 1092-1 B1)	763 (30)	110 (4.33)	99 (3.9)	126 (4.96)	80 (3.15)	416 (16.38)	543 (21.38)	31 (68.3)
	PN 63 (EN 1092-1 B2)	745 (29.33)	125 (4.92)						
	PN 100 (EN 1092-1 B2)								
	CL150 (ASME B16.5)	763 (30)	98.6 (3.88)						
	CL300 (ASME B16.5)	756 (29.76)	114.3 (4.5)						
	CL600 (ASME B16.5)								
	CL900 (ASME B16.5)	780 (30.71)	124 (4.88)						
	CL1500 (ASME B16.5)								
	JIS 10K	763 (30)	105 (4.13)						
	JIS 16K	763 (30)	105 (4.13)						
	JIS 20K	763 (30)	105 (4.13)						
50 (2)	PN 40 (EN 1092-1 B1)	715 (28.15)	125 (4.92)						
	PN 63 (EN 1092-1 B2)	745 (29.33)	135 (5.31)						
	PN 100 (EN 1092-1 B2)	745 (29.33)	145 (5.71)						
	CL150 (ASME B16.5)	715 (28.15)	120.7 (4.75)						
	CL300 (ASME B16.5)	763 (30)	127 (5.0)						
	CL600 (ASME B16.5)	773 (30.43)	127 (5.0)						
	CL900 (ASME B16.5)	790 (31.1)	165.1 (6.5)						
	CL1500 (ASME B16.5)								
	JIS 10K	715 (28.15)	120 (4.72)						
	JIS 16K	715 (28.15)	120 (4.72)						
	JIS 20K	715 (28.15)	120 (4.72)						
65 (2 ½)	PN 40 (EN 1092-1 B1)	763 (30)	145 (5.71)						
	CL150 (ASME B16.5)	756 (29.76)	139.7 (5.5)						
	CL900 (ASME B16.5)	800 (31.5)	190.5 (7.5)						
	CL1500 (ASME B16.5)								
	JIS 10K	763 (30)	140 (5.51)						
	JIS 16K	763 (30)	140 (5.51)						
	JIS 20K	763 (30)	140 (5.51)						

* Standard design: Devices with '**Extended tower length – TE1, TE2**' option or '**Burst pressure limits of the burst-proof sensor housing – PR5, PR6, PR7**' option

L dimension tolerance: +0 / −3 mm (+0 / −0.118 in)

... Flowmeter sensor

... Dimensions for devices with integral mount design

Devices with meter tube nominal diameter DN 80 (3 in) and flange DN 65 to 100 (2½ to 4 in)

Sensor with wetted parts made from stainless steel.

All dimensions and weights are specified in mm (in) or kg (lb).

Standard Version

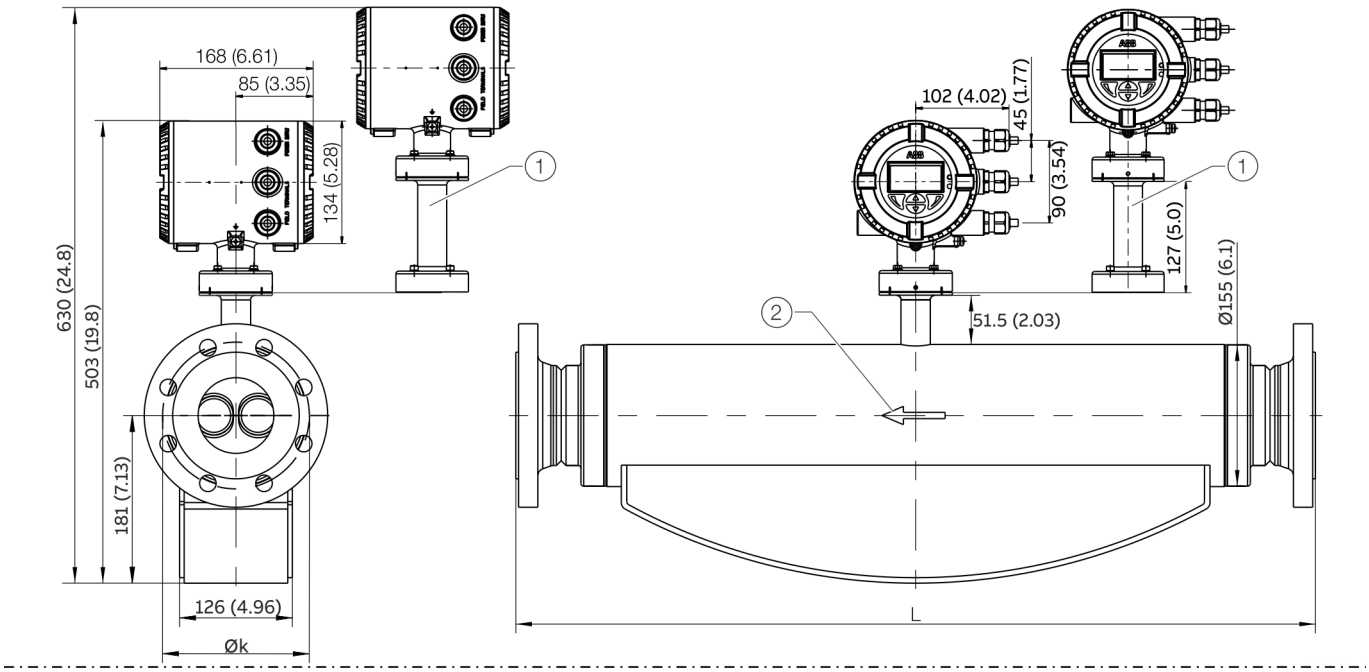

Marine version – CL1

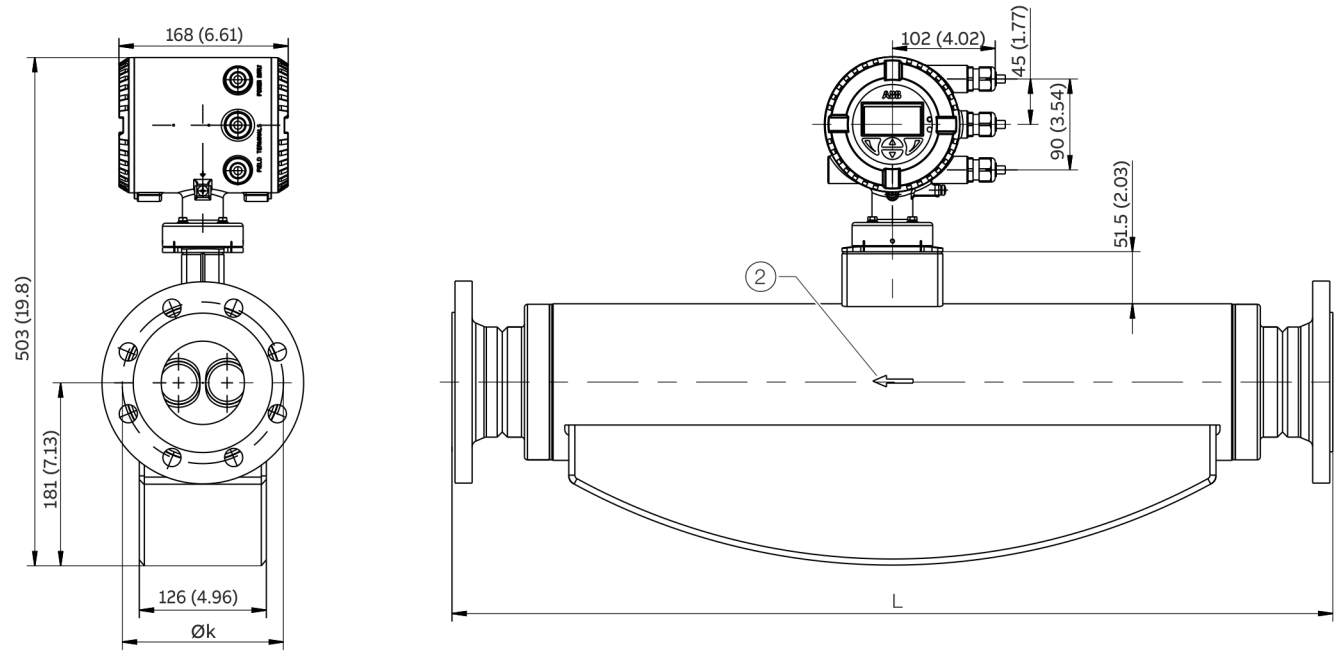

(1) '**Extended tower length – TE1, TE2**' option or '**Burst pressure limits of the burst-proof sensor housing – PR5, PR6, PR7**' option

(2) Flow direction

Figure 2: Integral mount design with dual-compartment transmitter housing

Meter tube nominal diameter DN 80 (3 in)				
DN / process connection		**L**	**Ø k**	**Weight max.**
65 (2½ in)	PN 16 (EN 1092-1 B1)	—[1]	—[1]	—[1]
	PN 40 (EN 1092-1 B1)	910 (35.83)	145 (5.71)	74 (163.1)
	PN 63 (EN 1092-1 B2)		160 (6.30)	78 (172.0)
	PN 100 (EN 1092-1 B2)		170 (6.69)	82 (180.8)
	CL150 (ASME B16.5)	920 (36.22)	123 (4.48)	74 (163.1)
	CL300 (ASME B16.5)	920 (36.22)	149.4 (5.88)	76 (167.6)
	CL600 (ASME B16.5)			77 (169.8)
	CL900 (ASME B16.5)	965 (37.99)	190.5 (7.50)	94 (207.23)
	CL1500 (ASME B16.5)			
	JIS 10K	910 (35.83)	140 (5.5)	74 (163.1)
	JIS 16K	910 (35.83)	140 (5.5)	74 (163.1)
	JIS 20K	920 (36.22)	140 (5.5)	74 (163.1)
80 (3 in)	PN 16 (EN 1092-1 B1)	870 (34.25)	160 (6.30)	74 (163.1)
	PN 40 (EN 1092-1 B1)			75 (165.4)
	PN 63 (EN 1092-1 B2)	910 (35.83)	170 (6.69)	79 (174.2)
	PN 100 (EN 1092-1 B2)		180 (7.09)	85 (187.4)
	CL150 (ASME B16.5)	880 (34.65)	152.4 (6.00)	75 (165.4)
	CL300 (ASME B16.5)	895 (35.24)	168.1 (6.62)	79 (174.2)
	CL600 (ASME B16.5)	920 (36.22)		82 (180.8)
	CL900 (ASME B16.5)	1100 (43.31)[2]	190.5 (7.50)	94 (207.23)
	CL1500 (ASME B16.5)	1300 (51.18)[2]	203.2 (8.00)	106 (233.7)
	JIS 10K	870 (34.25)	150 (5.91)	75 (165.4)
	JIS 16K	870 (34.25)	150 (5.91)	75 (165.4)
	JIS 20K	910 (35.83)	150 (5.91)	75 (165.4)
100 (4 in)	PN 16 (EN 1092-1 B1)	875 (34.45)	180 (7.09)	75 (165.3)
	PN 40 (EN 1092-1 B1)		190 (7.48)	77 (170)
	PN 63 (EN 1092-1 B2)	1060 (41.73)	200 (7.87)	86 (189.6)
	PN 100 (EN 1092-1 B2)	1080 (42.52)[2]	210 (8.27)	94 (207.23)
	CL150 (ASME B16.5)	880 (34.65)	190.5 (7.50)	77 (169.8)
	CL300 (ASME B16.5)	1075 (42.32)	200.2 (7.88)	91 (200.6)
	CL600 (ASME B16.5)	1100 (43.31)[2]	215.9 (8.50)	101 (222.7)
	CL900 (ASME B16.5)	1130 (44.49)[2]	234.9 (9.25)	111 (244.7)
	CL1500 (ASME B16.5)	1150 (45.28)[2]	241.3 (9.50)	126 (277.8)
	JIS 10K	1060 (41.73)[2]	175 (6.86)	85 (187.4)
	JIS 16K	1060 (41.73)[2]	175 (6.86)	85 (187.4)
	JIS 20K	1060 (41.73)[2]	175 (6.86)	85 (187.4)

1) On request

L dimension tolerance:

+0 / −3 mm (+0 / −0.118 in)

2) +0 / −8 mm (+0 / −0.31 in)

… Flowmeter sensor

… Dimensions for devices with integral mount design

Devices with meter tube nominal diameter DN 100 (4 in.) and flange DN 80 to 150 (3 to 6 in)

Sensor with wetted parts made from stainless steel.

All dimensions and weights are specified in mm (in) or kg (lb).

Standard Version

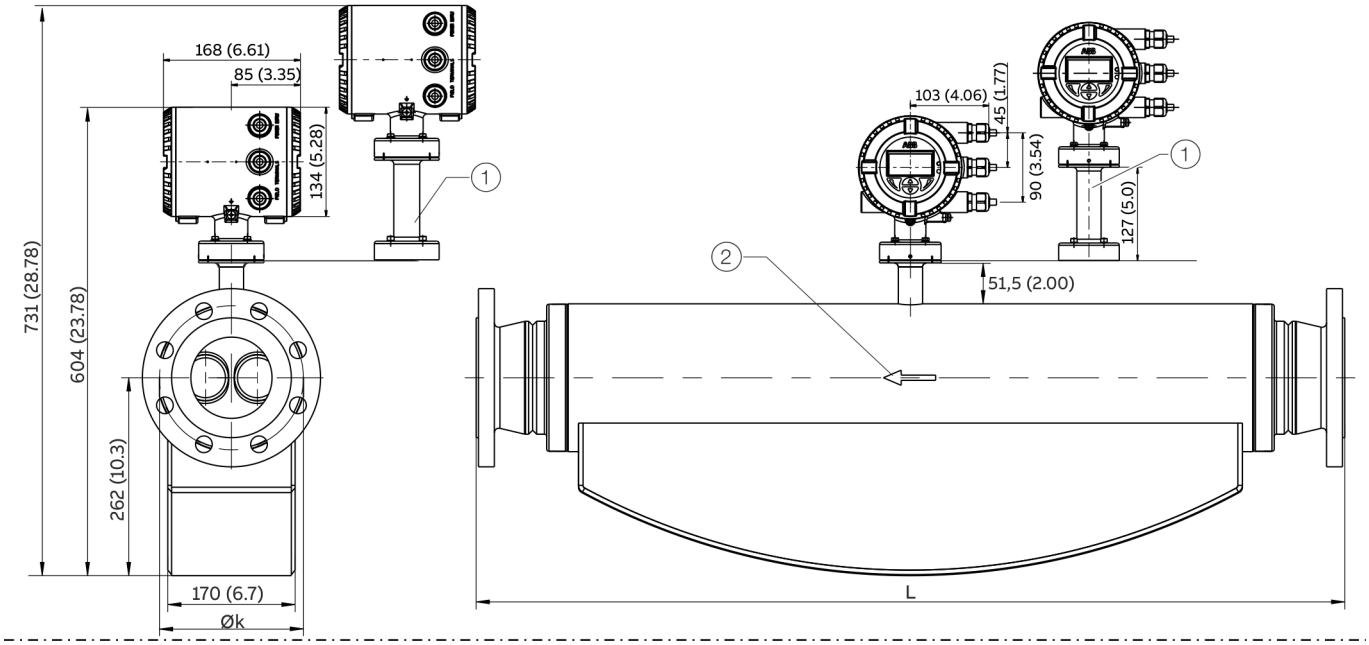

Marine version – CL1

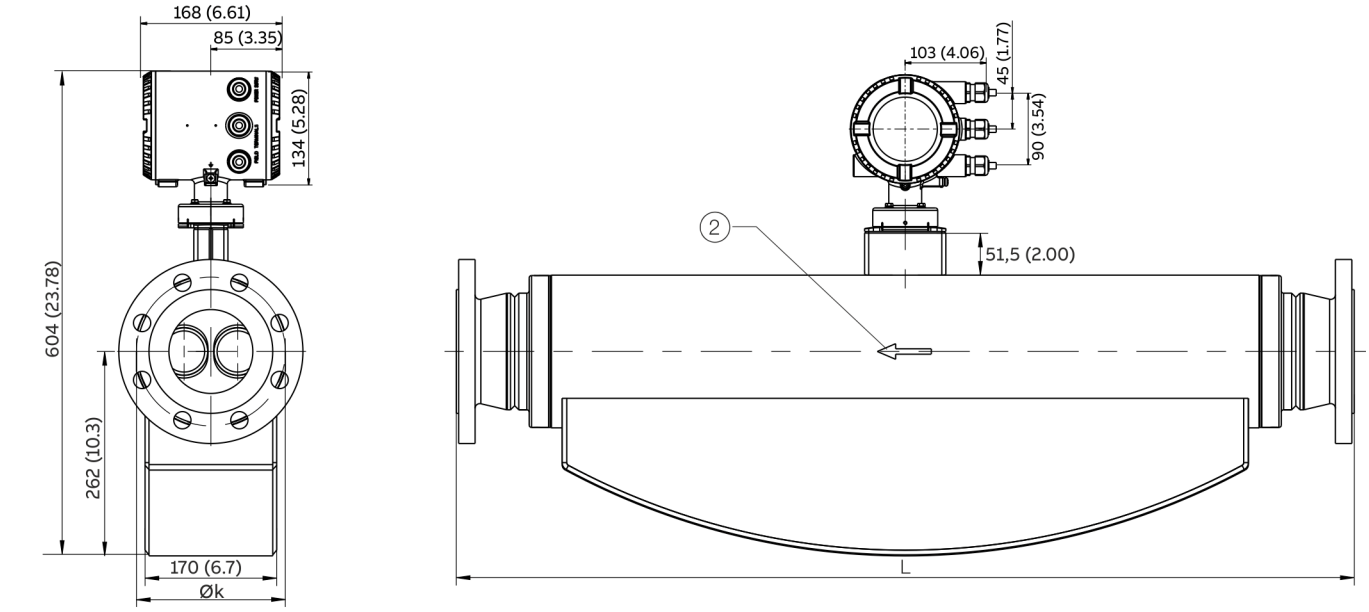

(1) '**Extended tower length – TE1, TE2**' option or '**Burst pressure limits of the burst-proof sensor housing – PR5, PR6, PR7**' option

(2) Flow direction

Figure 3: **Integral mount design with dual-compartment transmitter housing**

Meter tube nominal diameter DN 100 (4 in)				
DN / process connection		**L**	**Ø k**	**Weight max.**
80 (3 in)	PN 16 (EN 1092-1 B1)	1222 (48.11) [3]	160 (6.30)	126 (278)
	PN 40 (EN 1092-1 B1)			
	PN 63 (EN 1092-1 B2)	1234 (48.58) [3]	170 (6.69)	130 (287)
	PN 100 (EN 1092-1 B2)		180 (7.09)	132 (291)
	CL150 (ASME B16.5)	1244 (48.98) [3]	152.4 (6.00)	127 (280)
	CL300 (ASME B16.5)		168.1 (6.62)	135 (298)
	CL600 (ASME B16.5)		168.1 (6.62)	138 (304)
	CL900 (ASME B16.5)	1470 (57.87) [1]	190.5 (7.50)	141 (311)
	CL1500 (ASME B16.5)	1500 (59.05) [1]	203.2 (8.00)	153 (337)
	JIS 10K	1275 (50.20) [3]	150 (5.91)	123 (271)
	JIS 16K	1275 (50.20) [3]	150 (5.91)	123 (271)
	JIS 20K	1275 (50.20) [3]	150 (5.91)	123 (271)
100 (4 in)	PN 16 (EN 1092-1 B1)	1123 (44.21) [2]	180 (7.09)	123 (271)
	PN 40 (EN 1092-1 B1)	1146 (45.12) [2]	190 (7.48)	126 (278)
	PN 63 (EN 1092-1 B2)	1304 (51.34) [1]	138 (5.43)	133 (293)
	PN 100 (EN 1092-1 B2)	1334 (52.52) [1]	150 (5.91)	141 (311)
	CL150 (ASME B16.5)	1145 (45.08) [2]	190.5 (7.50)	127 (280)
	CL300 (ASME B16.5)	1320 (51.97) [2]	200.2 (7.88)	139 (306)
	CL600 (ASME B16.5)	1336 (52.60) [2]	215.9 (8.50)	141 (311)
	CL900 (ASME B16.5)	1380 (54.33) [1]	234.9 (9.25)	160 (353)
	CL1500 (ASME B16.5)	1400 (55.12) [1]	241.3 (9.50)	174 (384)
	JIS 10K	1150 (45.28) [1]	175 (6.89)	126 (278)
	JIS 16K	1150 (45.28) [1]	175 (6.89)	126 (278)
	JIS 20K	1150 (45.28) [1]	175 (6.89)	126 (278)
150 (6 in)	PN 16 (EN 1092-1 B1)	1255 (49.41) [2]	240 (9.44)	131 (289)
	PN 40 (EN 1092-1 B1)	1297 (51.06) [1]	250 (9.84)	139 (306)
	CL150 (ASME B16.5)	1252 (49.29) [2]	241.3 (9.50)	137 (302)
	CL600 (ASME B16.5)	1400 (55.12) [1]	–	–
	JIS 10K	1300 (51.18) [1]	240 (9.44)	130 (287)
	JIS 16K	1300 (51.18) [1]	240 (9.44)	130 (287)
	JIS 20K	1308 (51.50) [1]	240 (9.44)	130 (287)

L dimension tolerances

1) +0 / −10 mm (+0 / −0.39 in)
2) +0 / −5 mm (+0 / −0.20 in)
3) +0 / −8 mm (+0 / −0.31 in)

... Flowmeter sensor

... Dimensions for devices with integral mount design

Devices with meter tube nominal diameter DN 150 (6 in) and flange DN 100 to DN 200 (4 to 8 in)

Sensor with wetted parts made from stainless steel.

All dimensions and weights are specified in mm (in) or kg (lb).

Standard Version

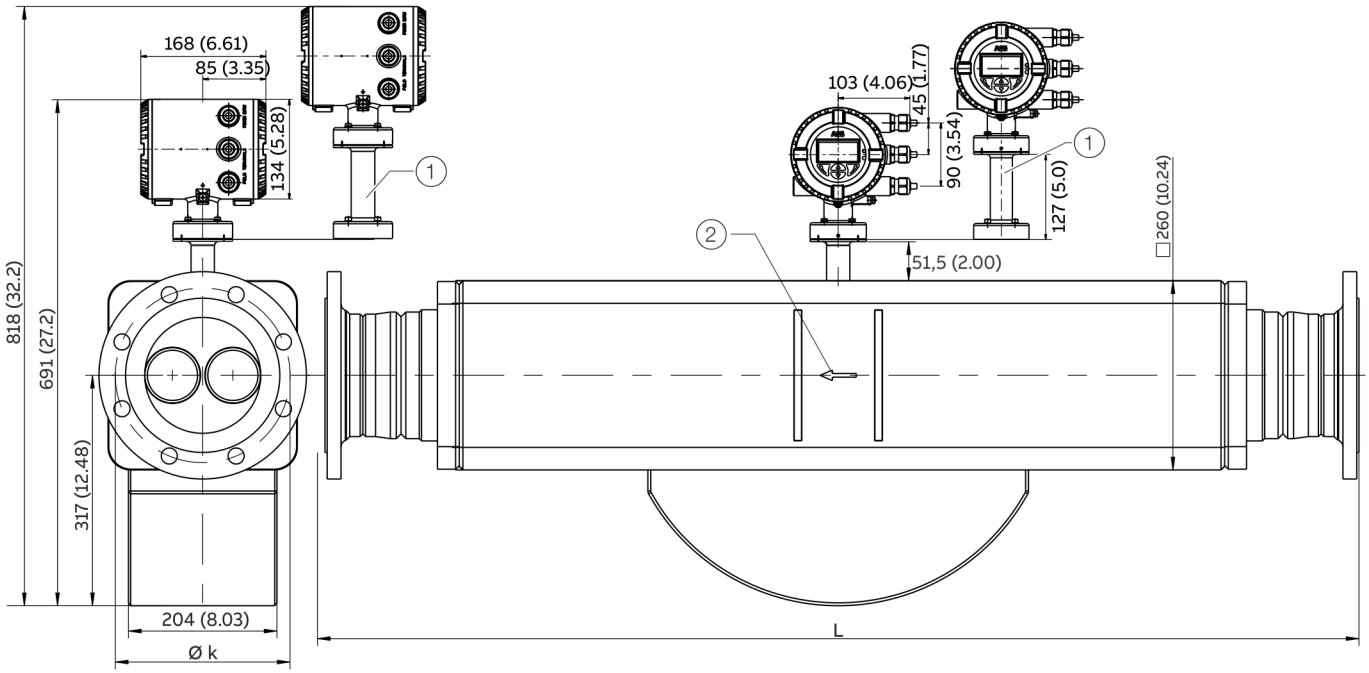

Marine version – CL1

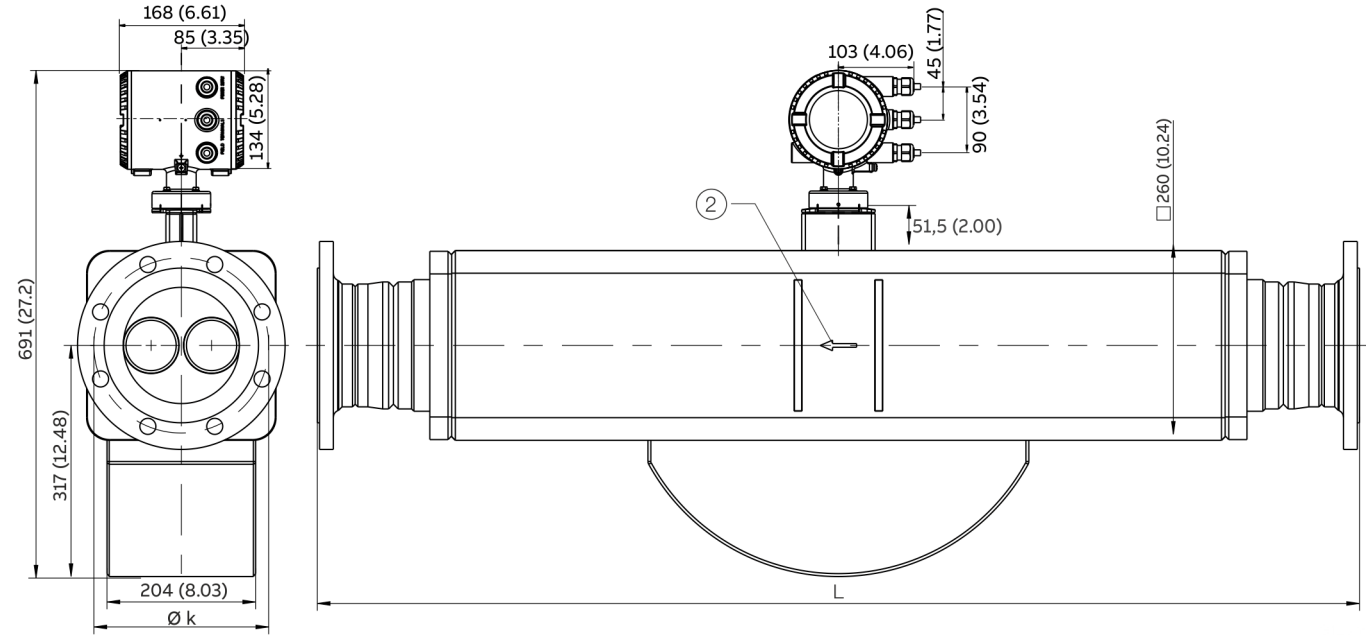

(1) '**Extended tower length – TE1, TE2**' option or '**Burst pressure limits of the burst-proof sensor housing – PR5, PR6, PR7**' option

(2) Flow direction

Figure 4: Integral mount design with dual-compartment transmitter housing

Meter tube nominal diameter DN 150 (6 in)				
DN / process connection		**L**	**Ø k**	**Weight max.**
100 (4 in)	PN 16 (EN 1092-1 B1)	1569 (61.77) [1]	180 (7.09)	175 (386)
	PN 40 (EN 1092-1 B1)	1599 (62.95) [1]	190 (7.48)	179 (395)
	CL150 (ASME B16.5)	1630 (64.17) [1]	190.5 (7.50)	182 (401)
	CL300 (ASME B16.5)	1650 (64.96) [1]	200.2 (7.88)	188 (414)
	CL600 (ASME B16.5)	1675 (65.94) [1]	215.9 (8.50)	198 (437)
	CL900 (ASME B16.5)	1705 (67.13) [1]	234.9 (9.25)	208 (459)
	CL1500 (ASME B16.5)	1725 (67.91) [1]	241.3 (9.50)	223 (492)
	JIS 10K	1485 (58.46) [1]	175 (6.89)	179 (395)
	JIS 16K	1485 (58.46) [1]	185 (7.28)	181 (399)
	JIS 20K	1485 (58.46) [1]	185 (7.28)	181 (399)
150 (6 in)	PN 16 (EN 1092-1 B1)	1421 (55.94) [1]	240 (9.45)	178 (392)
	PN 40 (EN 1092-1 B1)	1459 (57.44) [2]	250 (9.84)	186 (410)
	CL150 (ASME B16.5)	1482 (58.35) [2]	241.3 (9.50)	185 (408)
	CL300 (ASME B16.5)	1503 (59.17) [3]	269.7 (10.62)	203 (448)
	CL600 (ASME B16.5)	1555 (61.22) [3]	292.1 (11.50)	225 (496)
	CL900 (ASME B16.5)	1605 (63.19) [1]	317.5 (12.5)	249 (549)
	CL1500 (ASME B16.5)	1665 (65.55) [1]		291 (642)
	JIS 10K	1425 (56.10) [1]	240 (9.45)	186 (410)
	JIS 16K	1456 (57.32) [1]	260 (6.30)	187 (412)
	JIS 20K	1464 (57.64) [1]	260 (6.30)	187 (412)
200 (8 in)	PN 16 (EN 1092-1 B1)	–*	–*	–*
	PN 40 (EN 1092-1 B1)	1637 (64.45) [3]	320 (12.6)	209 (461)
	CL150 (ASME B16.5)	1650 (64.96) [1]	298.5 (11.75)	204 (450)
	CL300 (ASME B16.5)	1664 (65.51) [2]	330.2 (13.0)	229 (505)
	CL600 (ASME B16.5)	1730 (68.11) [3]	–	–
	JIS10K	1583 (62.32) [2]	290 (11.42)	209 (461)
	JIS 16K	1615 (63.58) [1]	305 (12.01)	210 (463)
	JIS 20K	1623 (63.90) [1]	305 (12.01)	210 (463)

* On request

L dimension tolerances

1) +0 / −15 mm (+0 / −0.59 in)
2) +0 / −5 mm (+0 / −0.20 in)
3) +0 / −8 mm (+0 / −0.31 in)

... Flowmeter sensor

... Dimensions for devices with integral mount design

Devices DN 15 to 150 (½ to 6 in) in NAMUR standard installation lengths (order option S5, S7)

Sensor with wetted parts made from stainless steel.

Dimensions and weights are in mm (in) and kg (lb).

Standard Version

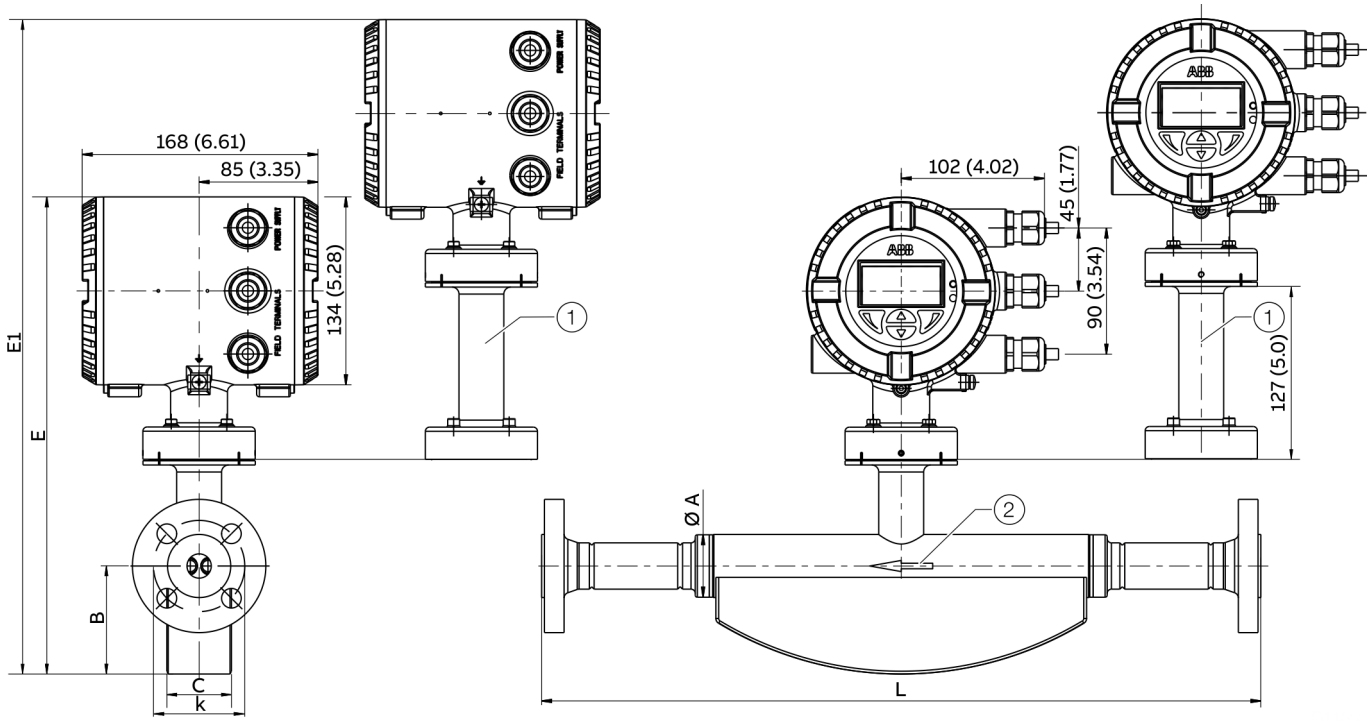

Marine version – CL1

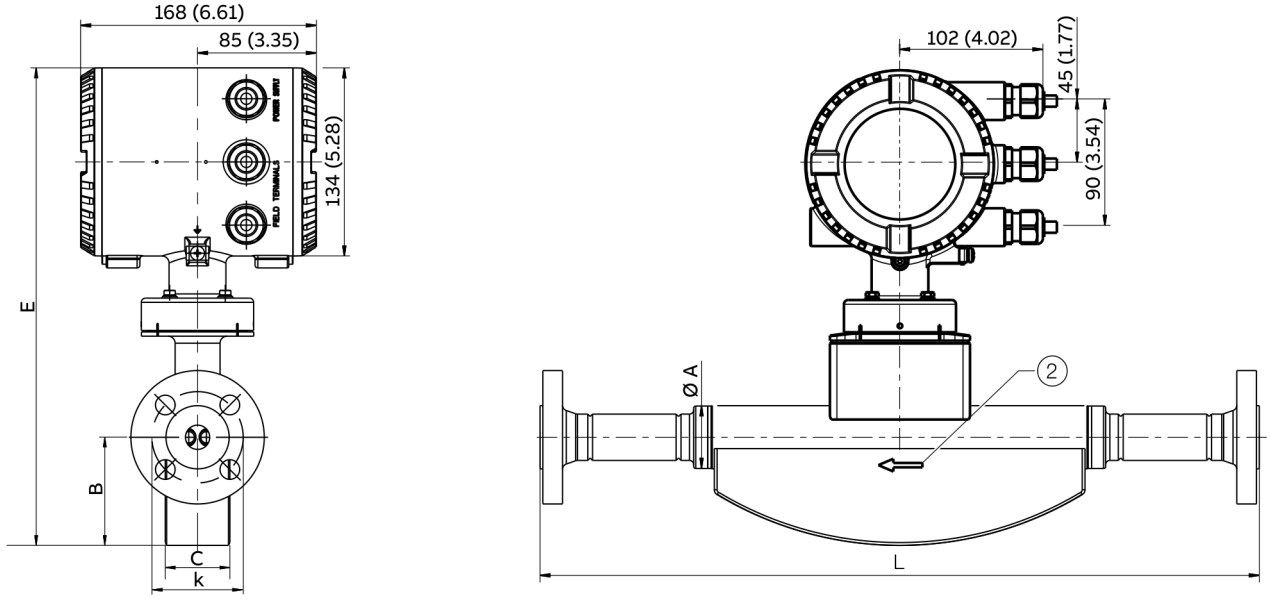

(1) '**Extended tower length – TE1, TE2**' option or '**Burst pressure limits of the burst-proof sensor housing – PR5, PR6, PR7**' option

(2) Flow direction

Figure 5: **Device in integral mount design**

Devices DN 15 to 150 in NAMUR standard installation lengths									
Meter tube	**Process connection EN 1092-1 B1**	**L**	**Ø k**	**Ø A**	**B**	**C**	**E**	**E1***	**Weight max.**
DN 15 (½ in)	DN 15 (½ in) / PN 40	510 (20.08) [1)]	60 (2.4)	44.5 (1.8)	77 (3.0)	46 (1.8)	340 (13.39)	467 (18.39)	13.5 (29.8)
DN 25 (1 in)	DN 25 (1 in) / PN 40	600 (23.62) [1)]	75 (3.0)	69.5 (2.74)	103 (4.06)	62 (2.44)	379 (14.92)	506 (19.92)	15 (33.1[)]
DN 50 (1 in)	DN 50 (1 in) / PN 40	715 (28.15) [1)]	125 (4.92)	99 (3.9)	125 (4.92)	80 (3.15)	416 (16.38)	543 (21.38)	31 (68.3)
DN 80 (3 in)	DN 80 (3 in) / PN 40	915 (36.02) [1)]	160 (6.30)	155 (6.1)	183 (7.2)	123 (4.84)	505 (19.88)	632 (24.88)	74 (163)
DN 100 (4 in)	DN 100 (4 in) / PN 16	1400 (55.12) [2)]	180 (7.09)	195 (7.68)	261 (10.28)	168 (6.61)	603 (23.74)	730 (28.74)	123 (271)
DN 150 (6 in)	DN 150 (6 in) / PN 16	1700 (66.93) [3)]	240 (9.45)	260 (10.24)	320 (12.6)	205 (8.07)	691 (27.2)	818 (32.2)	178 (392)

* Standard design: Devices with '**Extended tower length – TE1, TE2**' option or '**Burst pressure limits of the burst-proof sensor housing – PR5, PR6, PR7**' option

L dimension tolerances

1) +0 / −3 mm (+0 / −0.118 in)
2) +0 / −5 mm (+0 / −0.20 in)
3) +0 / −20 mm (+0 / −0.79 in)

... Flowmeter sensor

... Dimensions for devices with integral mount design

Devices with meter tube nominal diameter DN 15 to 80 and connections in accordance with SMS 1145, DIN 11851, DIN 32676, DIN ISO 228, ASME BPE and ASME B 1.20.1

Sensor with wetted parts made from stainless steel.

All dimensions and weights are specified in mm (in) or kg (lb).

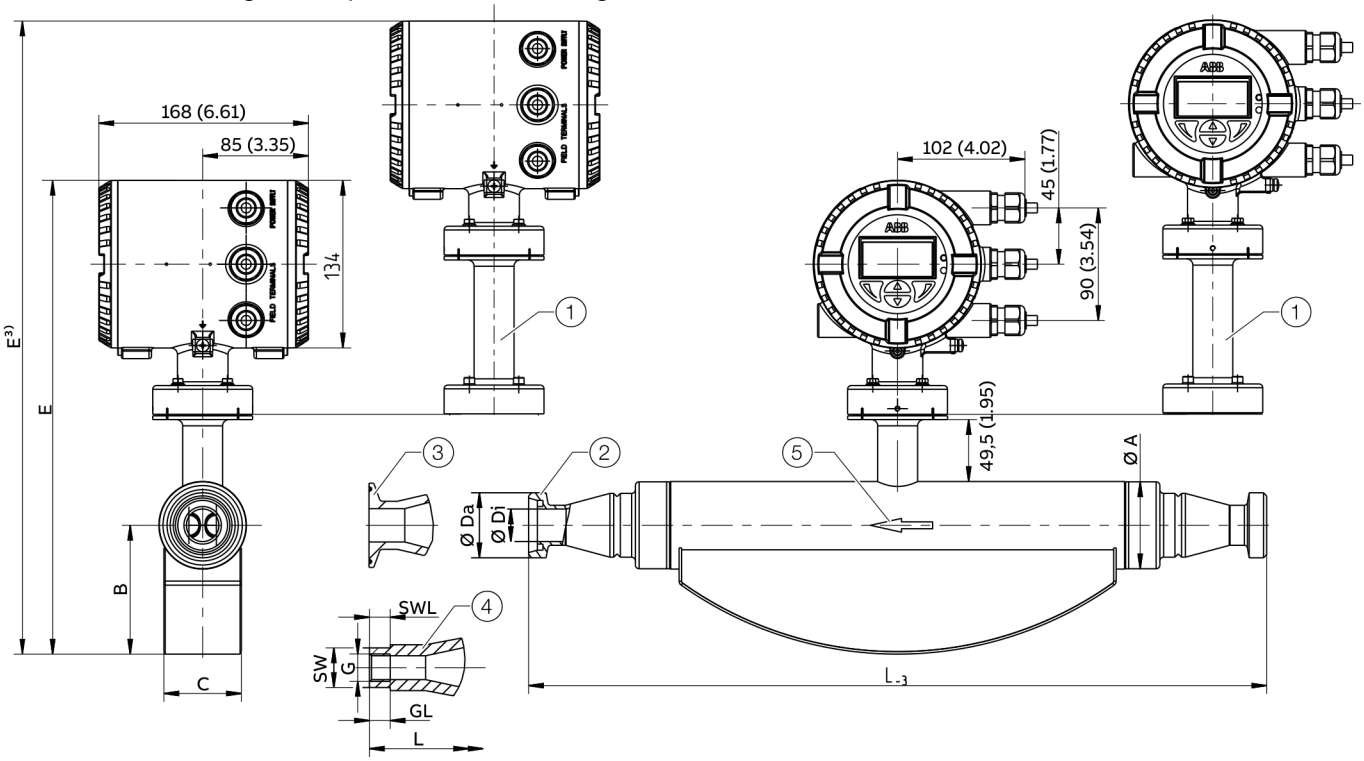

1. '**Extended tower length – TE1**' option or '**Burst pressure limits of the burst-proof sensor housing – PR5, PR6, PR7**' option.
2. Threaded spuds in accordance with DIN 11851 and SMS 1145
3. Clamping connection in accordance with DIN 32676 and ASME BPE
4. Female thread connection in accordance with DIN ISO 228 and ASME B 1.20.1
5. Flow direction

Figure 20: Integral mount design with dual-compartment transmitter housing

Process connection in accordance with SMS 1145 meter tube nominal diameter DN 25 to 80 (1 to 3 in)											
Meter tube	**Process connection**		**L**	**Ø DA**	**Ø Di**	**Ø A**	**B**	**C**	**E**	**Approximate weight**	
DN	**DN**	**PN**								**Aluminum***	**Stainless steel****
25 (1 in)	25 (1 in)	6	590 (23.2)	RD 40x1⅙ in	22.6 (0.89)	69.5	103	62	379 / 506***	13 (29)	14 (31)
	40 (1½ in)			RD 60x1⅙ in	38 (1.50)	(2.74)	(4.06)	(2.44)	(14.92 / 19.92***)		
50 (2 in)	40 (1½ in)	6	763 (30.0)	RD 60x1⅙ in	35.5 (1.40)	99	125	80	416 / 543***	29 (64)	30 (66)
	50 (2 in)		740 (29.1)	RD 70x1⅙ in	48.5 (1.91)	(3.46)	(4.92)	(3.15)	(16.38 / 21.38***)		
	65 (2½ in)			RD 85x1⅙ in	60.5 (2.38)						
80 (3 in)	65 (2½ in)		990 (39.0)	RD 85x1⅙ in	60.5 (2.38)	155	183	123	505 / 632***	70 (154)	71 (156)
	80 (3 in)		940 (37.0)	RD 98x¼ in	72.6 (2.86)	(6.10)	(7.20)	(4.84)	(19.88 / 24.88***)		

* Devices with terminal boxes made from aluminum.

** Devices with terminal boxes made from stainless steel.

*** Devices with '**Extended tower length – TE1**' option or '**Burst pressure limits of the burst-proof sensor housing – PR5, PR6, PR7**' option.

Process connection in accordance with DIN 11851 meter tube nominal diameter DN 15 to 80 (½ to 3 in.)

Meter tube	Process connection		L	Ø DA	Ø Di	Ø A	B	C	E	Approximate weight	
DN	DN	PN								Aluminum*	Stainless steel**
15 (½ in)	10 (⅜ in)	40	413 (16.3)	RD 28x⅛ in	10 (0.39)	44.5	77 (3.03)	46 (1.81)	340 / 467***	9 / 10***	12 / 13***
	15 (½ in)			RD 34x⅛ in	16 (0.63)	(1.75)			(13.39 / 18.39***)	(20 / 22***)	(27 / 29***)
	20 (¾ in)			RD 44x⅛ in	20 (0.79)						
25 (1 in)	20 (¾ in)		590 (23.2)	RD 44x⅛ in	20 (0.79)	69.5	103	62	379 / 506***	11 / 12***	14 / 15***
	25 (1 in)			RD 52x⅛ in	26 (1.02)	(2.74)	(4.06)	(2.44)	(14.92 / 19.92***)	(24 / 27***)	(31 / 33***)
	40 (1 ½ in)			RD 65x⅛ in	38 (1.5)						
50 (2 in)	40 (1 ½ in)		763 (30.0)	RD 65x⅛ in	38 (1.5)	99	125	80	416 / 543***	27 / 28***	30 / 31***
	50 (2 in)	25	740 (29.1)	RD 78x⅛ in	50 (1.97)	(3.46)	(4.92)	(3.15)	(16.38 / 21.38***)	(60 / 62***)	(66 / 68***)
	65 (2 ½ in)			RD 95x⅛ in	66 (2.6)						
80 (3 in)	65 (2 ½ in)		990 (39.0)	RD 95x⅛ in	66 (2.6)	155	183	123	505 / 632***	68 / 69***	71 / 72***
	80 (3 in)		940 (37.0)	RD 110x¼ in	81 (3.19)	(6.10)	(7.20)	(4.84)	(19.88 / 24.88***)	(150 / 152***)	(157 / 159***)
	100 (4 in)			RD 130x¼ in	100 (3.94)						

Process connection in accordance with DIN 32676 meter tube nominal diameter DN 15 to 80 (½ to 3 in.)

Meter tube	Process connection		L	Ø DA	Ø Di	Ø A	B	C	E	Approximate weight	
DN	DN	PN								Aluminum*	Stainless steel**
15 (½ in)	10 (⅜ in)	40	413 (16.3)	34 (1.34)	10 (0.39)	44.5	77	46	340 / 467***	9 / 10***	12 / 13***
	15 (½ in)				16 (0.63)	(1.75)	(3.03)	(1.81)	(13.39 / 18.39***)	(20 / 22***)	(27 / 29***)
	20 (¾ in)				20 (0.79)						
25 (1 in)	20 (¾ in)		590 (23.2)		20 (0.79)	69.5	103	62	379 / 506***	11 / 12***	14 / 15***
	25 (1 in)			50.5 (1.99)	26 (1.02)	(2.74)	(4.06)	(2.44)	(14.92 / 19.92***)	(24 / 27***)	(31 / 33***)
	40 (1 ½ in)				38 (1.5)						
50 (2 in)	40 (1 ½ in)		763 (30.0)		38 (1.5)	99	125	80	416 / 543***	27 / 28***	30 / 31***
	50 (2 in)	25	740 (29.1)	64 (2.52)	50 (1.97)	(3.46)	(4.92)	(3.15)	(16.38 / 21.38***)	(60 / 62***)	(66 / 68***)
	65 (2 ½ in)			91 (3.58)	66 (2.6)						
80 (3 in)	65 (2 ½ in)	10	950 (37.4)		66 (2.6)	155	183	123	505 / 632***	68 / 69***	71 / 72***
	80 (3 in)		910 (35.83)	106 (4.17)	81 (3.19)	(6.10)	(7.20)	(4.84)	(19.88 / 24.88***)	(150 / 152***)	(157 / 159***)
	100 (4 in)			119 (4.69)	100 (3.94)						

* Devices with terminal boxes made from aluminum.

** Devices with terminal boxes made from stainless steel.

*** Devices with '**Extended tower length – TE1**' option or '**Burst pressure limits of the burst-proof sensor housing – PR5, PR6, PR7**' option.

Tolerance for dimension L: +0 / −3 mm (+0 / −0.118 in)

… Flowmeter sensor

… Dimensions for devices with integral mount design

Process connection in accordance with ASME BPE, meter tube nominal diameter DN 15 to 80 (½ to 3 in.)

Meter tube	Process connection		L	Ø DA	Ø Di	Ø A	B	C	E	Approximate weight	
DN	DN	PN								Aluminum[1]	Stainless steel[2]
15 (½ in)	⅜ in-Type A	10	–	–	–	44.5	77	46	340 / 467[3]	9 / 10[3]	12 / 13[3]
	½ in-Type A		433 (17.05)	25 (0.98)	9.4 (0.37)	(1.75)	(3.03)	(1.81)	(13.39 / 18.39[3])	(20 / 22[3])	(27 / 29[3])
	¾ in-Type A		–	–	–						
25 (1 in)	¾ in-Type A		–	–	–	69.5	103	62	379 / 506[3]	11 / 12[3]	14 / 15[3]
	1 in-Type B		590 (23.23)	50.4 (1.98)	22.1 (0.87)	(2.74)	(4.06)	(2.44)	(14.92 / 19.92[3])	(24 / 27[3])	(31 / 33[3])
	1½ in-Type B		590 (23.23)	50.4 (1.98)	34.8 (1.37)						
50 (2 in)	1½ in-Type B		–	–	–	99	125	80	416 / 543[3]	27 / 28[3]	30 / 31[3]
	2 in-Type B		740 (29.13)	63.9 (2.52)	47.5 (1.87)	(3.46)	(4.92)	(3.15)	(16.38 / 21.38[3])	(60 / 62[3])	(66 / 68[3])
	2½ in-Type B		–	–	–						
80 (3 in)	2½ in-Type B		950 (37.40)	77.4 (3.05)	60.2 (2.37)	155	183	183	505 / 632[3]	68 / 69[3]	71 / 72[3]
	3 in-Type B		910 (35.83)	90.9 (3.19)	72.9 (2.87)	(6.10)	(7.20)	(7.20)	(19.88 / 24.88[3])	(150 / 152[3])	(157 / 159[3])
	4 in-Type B		910 (35.83)	118.9 (4.68)	97.4 (3.83)						

Process connection in accordance with DIN ISO 228 and ASME B 1.20.1, meter tube nominal diameter DN 15 (½ in)

Meter tube	Process connection		L	GL	WS[4]	SWL	Ø A	B	C	E	Approximate weight	
DN	DN / G	PN									Aluminum[1]	Stainless steel[2]
15 (½ in)	8 (¼ in) / G ¼ in	100	450 (17.72)	10 (0.39)	19	10 (0.39)	44.5 (1.75)	77 (3.03)	46 (1.81)	340 / 467[3] (13.39 / 18.39[3])	9 / 10[3] (20 / 22[3])	12 / 13[3] (27 / 29[3])
	15 (½ in) / G ½in.			13.5 (0.53)	27	15 (0.59)						
	25 (1 in) / G 1 in		490 (19.29)	17 (0.67)	50	20 (0.79)						
	15 (½in.) / ½ in NPT		450 (17.72)	15.6 (0.61)	27	15 (0.59)						

1 Devices with terminal boxes made from aluminum.

2 Devices with terminal boxes made from stainless steel.

3 Devices with '**Extended tower length – TE1**' option or '**Burst pressure limits of the burst-proof sensor housing – PR5, PR6, PR7**' option.

4 Dimension WS: Width across flats specified in mm.

Tolerance for dimension L: +0 / −3 mm (+0 / −0.118 in)

Dimensions for devices with remote mount design

Devices with meter tube nominal DN 15 to 50 (½ to 2 in) and flange DN 10 to 65 (⅜ to 2½ in)

Sensor with wetted parts made from stainless steel.

All dimensions and weights are specified in mm (in) or kg (lb).

Standard Version

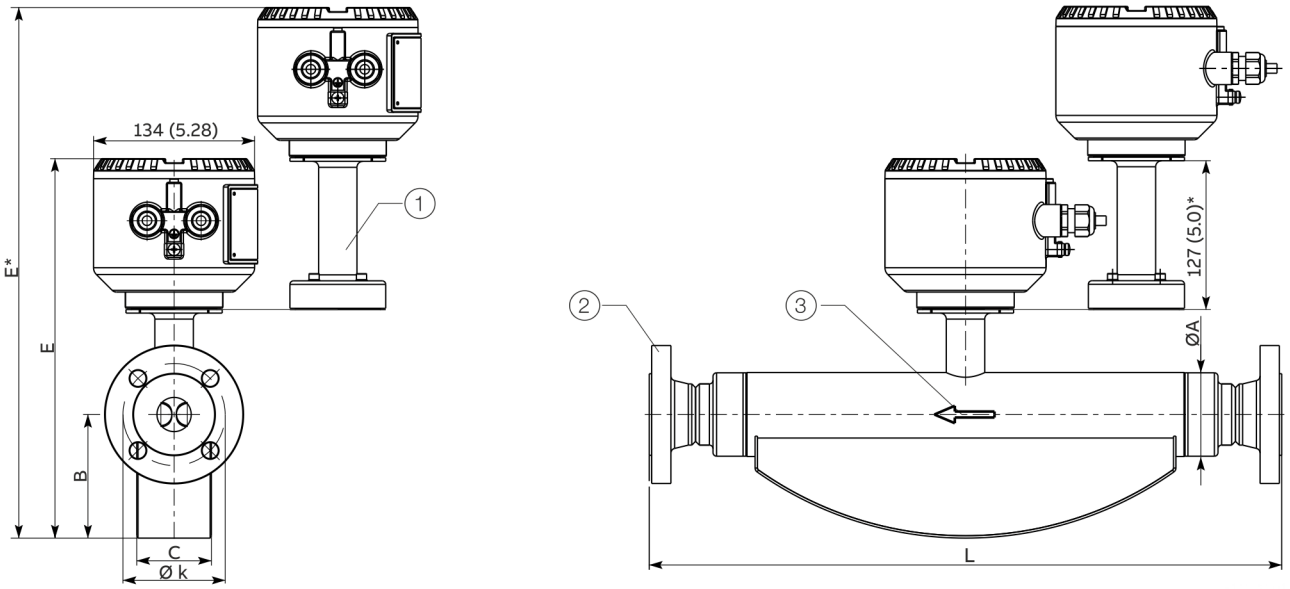

Marine version – CL1

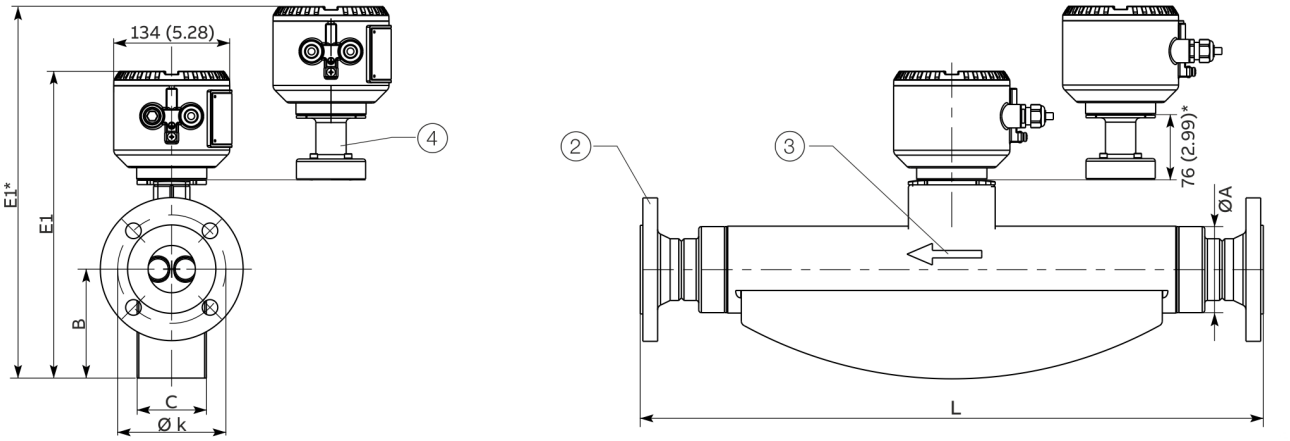

1. '**Extended tower length – TE1, TE2**' option or '**Burst pressure limits of the burst-proof sensor housing – PR5, PR6, PR7**' option
2. Flange in accordance with EN 1092-1, ASME B16.5, ISO 7005 (connection dimensions for ASME flanges in accordance with ASME B16.5 (ANSI))
3. Flow direction
4. '**Extended tower length – TE3**' option

* Standard design: Devices with '**Extended tower length – TE1, TE2**' option or '**Burst pressure limits of the burst-proof sensor housing – PR5, PR6, PR7**' option

** Marine version – CL1: Devices with '**Extended tower length – TE3**' option

Figure 6: Remote mount design

… Flowmeter sensor

… Dimensions for devices with remote mount design

Meter tube nominal diameter DN 15 (½ in)									
DN / process connection		**L**	**Ø k**	**Ø A**	**B**	**C**	**E**	**E1**	**Weight max.**
10 (⅜ in)	PN 40 (EN 1092-1 B1)	385 (15.2)	60 (2.4)	44.5 (1.8)	80 (3.2)	49 (1.93)	283 (11.1) 410* (16.1*)	283 (11.1) 357** (14.1**)	13 (28.7)
	JIS 10K	385 (15.2)	65 (2.6)						
	JIS 16K	385 (15.2)	65 (2.6)						
	JIS 20K	385 (15.2)	65 (2.6)						
15 (½ in)	PN 40 (EN 1092-1 B1)	385 (15.2)	65 (2.6)						
	PN 63 (EN 1092-1 B2)	403 (15.9)	75 (3.0)						
	PN 100 (EN 1092-1 B2)								
	CL150 (ASME B16.5)	435 (17.1)	60.5 (2.4)						
	CL300 (ASME B16.5)	421 (16.6)	66.5 (2.6)						
	CL600 (ASME B16.5)								
	CL900 (ASME B16.5)	421 (16.6)	82.6 (3.3)						
	CL1500 (ASME B16.5)								
	JIS 10K	385 (15.2)	70 (2.8)						
	JIS 16K	385 (15.2)	70 (2.8)						
	JIS 20K	385 (15.2)	70 (2.8)						
20 (¾ in)	PN 40 (EN 1092-1 B1)	421 (16.6)	75 (3.0)						
	CL150 (ASME B16.5)	421 (16.6)	69.9 (2.8)						
	JIS 10K	421 (16.6)	75 (3.0)						
	JIS 16K	421 (16.6)	75 (3.0)						
	JIS 20K	421 (16.6)	75 (3.0)						

* Standard design: Devices with '**Extended tower length – TE1, TE2**' option or '**Burst pressure limits of the burst-proof sensor housing – PR5, PR6, PR7**' option

** Marine version – CL1: Devices with '**Extended tower length – TE3**' option

Meter tube nominal diameter DN 25 (1 in)									
DN / process connection		**L**	**Ø k**	**Ø A**	**B**	**C**	**E**	**E1**	**Weight max.**
20 (¾ in)	PN 40 (EN 1092-1 B1)	576 (22.7)	75 (3.0)	69.5 (2.74)	103 (4.06)	62 (2.44)	324 (12.8)	324 (12.8)	15 (33.1[)]
	CL150 (ASME B16.5)	575 (22.6)	69.9 (2.8)				451* (17.8*)	398** (15.7**)	
	JIS 10K	576 (22.7)	75 (3.0)						
	JIS 16K	576 (22.7)	75 (3.0)						
	JIS 20K	576 (22.7)	75 (3.0)						
25 (1 in)	PN 40 (EN 1092-1 B1)	525 (20.7)	85 (3.3)						
	PN 63 (EN 1092-1 B2) PN 100 (EN 1092-1 B2)	564 (22.2)	100 (3.9)						
	CL150 (ASME B16.5)	575 (22.6)	79.2 (3.1)						
	CL300 (ASME B16.5) CL600 (ASME B16.5)	576 (22.7)	88.9 (3.5)						
	CL900 (ASME B16.5) CL1500 (ASME B16.5)	576 (22.7)	101.6 (4.0)						
	JIS 10K	525 (20.7)	90 (3.54)						
	JIS 16K	525 (20.7)	90 (3.54)						
	JIS 20K	525 (20.7)	90 (3.54)						
40 (1½ in)	PN 40 (EN 1092-1 B1)	576 (22.7)	110 (4.33)						
	PN 63 (EN 1092-1 B2) PN 100 (EN 1092-1 B2)	572 (22.5)	125 (4.92)						
	CL150 (ASME B16.5)	576 (22.7)	98.6 (3.88)						
	CL300 (ASME B16.5) CL600 (ASME B16.5)	576 (22.7)	114.3 (45.0)						
	JIS 10K	576 (22.7)	105 (4.13)						
	JIS 16K	576 (22.7)	105 (4.13)						
	JIS 20K	576 (22.7)	105 (4.13)						

* Standard design: Devices with '**Extended tower length – TE1, TE2**' option or '**Burst pressure limits of the burst-proof sensor housing – PR5, PR6, PR7**' option

** Marine version – CL1: Devices with '**Extended tower length – TE3**' option

L dimension tolerance: +0 / −3 mm (+0 / −0.118 in)

… Flowmeter sensor

… Dimensions for devices with remote mount design

Meter tube nominal diameter DN 50 (2 in)									
DN / process connection		**L**	**Ø k**	**Ø A**	**B**	**C**	**E**	**E1**	**Weight max.**
40 (1½ in)	PN 40 (EN 1092-1 B1)	763 (30)	110 (4.33)	99 (3.9)	126 (4.96)	80 (3.15)	354 (13.9)	354 (13.9)	31 (68.3)
	PN 63 (EN 1092-1 B2)	745 (29.33)	125 (4.92)				481* (18.94*)	428** (16.9**)	
	PN 100 (EN 1092-1 B2)								
	CL150 (ASME B16.5)	763 (30)	98.6 (3.88)						
	CL300 (ASME B16.5)	756 (29.76)	114.3 (4.5)						
	CL600 (ASME B16.5)								
	CL900 (ASME B16.5)	780 (30.71)	124 (4.88)						
	CL1500 (ASME B16.5)								
	JIS 10K	763 (30)	105 (4.13)						
	JIS 16K	763 (30)	105 (4.13)						
	JIS 20K	763 (30)	105 (4.13)						
50 (2 in)	PN 40 (EN 1092-1 B1)	715 (28.15)	125 (4.92)						
	PN 63 (EN 1092-1 B2)	745 (29.3)	135 (5.31)						
	PN 100 (EN 1092-1 B2)	745 (29.33)	145 (5.71)						
	CL150 (ASME B16.5)	715 (28.15)	120.7 (4.75)						
	CL300 (ASME B16.5)	763 (30)	127 (5.0)						
	CL600 (ASME B16.5)	773 (30.43)	127 (5.0)						
	CL900 (ASME B16.5)	790 (31.1)	165.1 (6.5)						
	CL1500 (ASME B16.5)								
	JIS 10K	715 (28.15)	120 (4.72)						
	JIS 16K	715 (28.15)	120 (4.72)						
	JIS 20K	715 (28.15)	120 (4.72)						
65 (2½ in)	PN 40 (EN 1092-1 B1)	763 (30)	145 (5.71)						
	CL150 (ASME B16.5)	756 (29.76)	139.7 (5.5)						
	CL900 (ASME B16.5)	800 (31.5)	190.5 (7.5)						
	CL1500 (ASME B16.5)								
	JIS 10K	763 (30)	140 (5.51)						
	JIS 16K	763 (30)	140 (5.51)						
	JIS 20K	763 (30)	140 (5.51)						

* Standard design: Devices with '**Extended tower length – TE1, TE2**' option or '**Burst pressure limits of the burst-proof sensor housing – PR5, PR6, PR7**' option

** Marine version – CL1: Devices with '**Extended tower length – TE3**' option

L dimension tolerance: +0 / −3 mm (+0 / −0.118 in)

Devices with meter tube nominal diameter DN 80 (3 in) and flange DN 65 to 100 (2½ to 4 in)

Sensor with wetted parts made from stainless steel.

All dimensions and weights are specified in mm (in) or kg (lb).

Standard Version

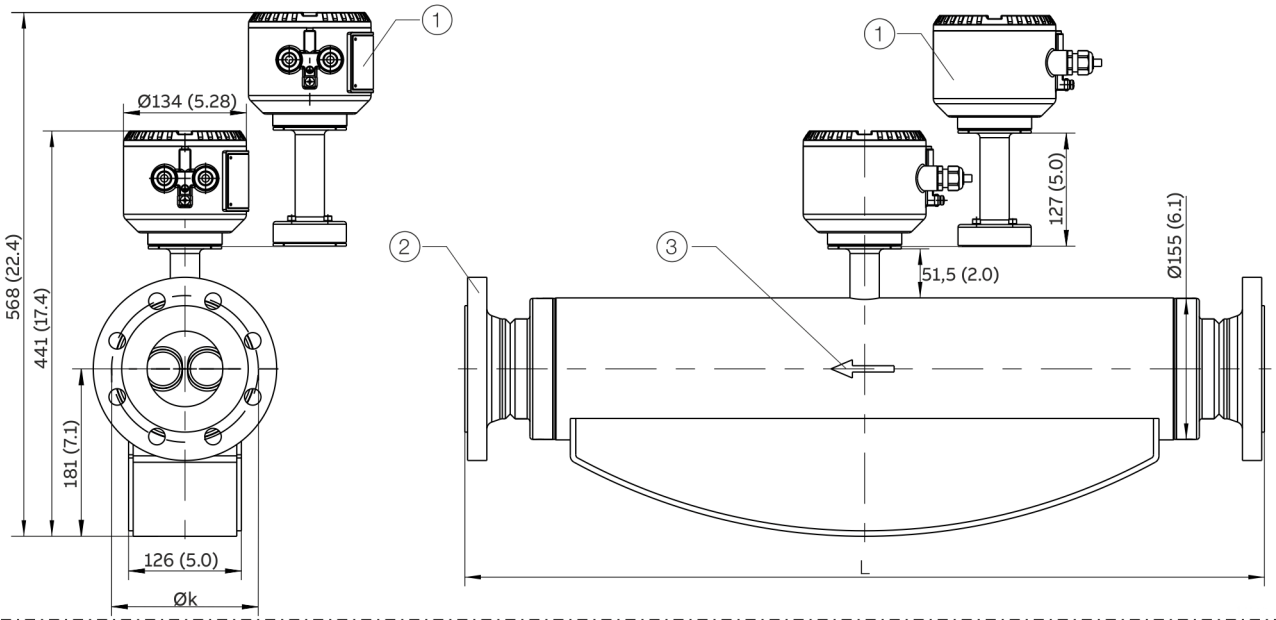

Marine version – CL1

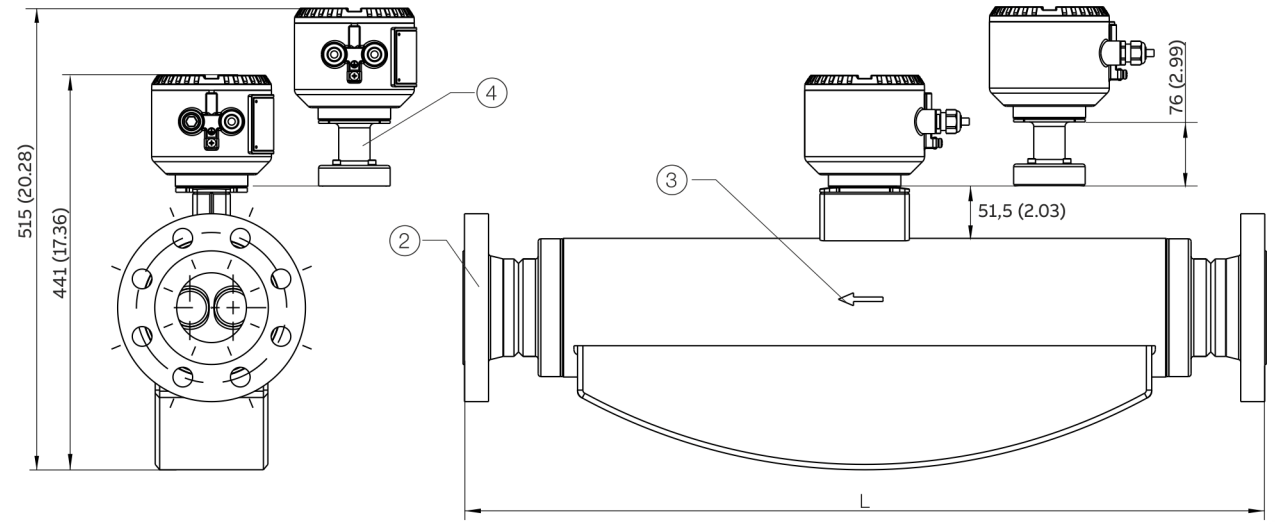

1. '**Extended tower length – TE1, TE2**' option or '**Burst pressure limits of the burst-proof sensor housing – PR5, PR6, PR7**' option
2. Flange in accordance with EN 1092-1, ASME B16.5, ISO 7005 (connection dimensions for ASME flanges in accordance with ASME B16.5 (ANSI))
3. Flow direction
4. '**Extended tower length – TE3**' option

Figure 7: Remote mount design

... Flowmeter sensor

... Dimensions for devices with remote mount design

Meter tube nominal diameter DN 80 (3 in)				
DN / process connection		**L**	**Ø k**	**Weight max.**
65 (2½ in)	PN 16 (EN 1092-1 B1)	–*	–*	–*
	PN 40 (EN 1092-1 B1)	910 (35.83)	145 (5.71)	74 (163.1)
	PN 63 (EN 1092-1 B2)		160 (6.3)	78 (172.0)
	PN 100 (EN 1092-1 B2)		170 (6.69)	82 (180.8)
	CL150 (ASME B16.5)	920 (36.22)	123 (4.48)	74 (163.1)
	CL300 (ASME B16.5)	920 (36.22)	149.4 (5.88)	76 (167.6)
	CL600 (ASME B16.5)			77 (169.8)
	CL900 (ASME B16.5)	965 (37.99)	190.5 (7.5)	94 (207.2)
	CL1500 (ASME B16.5)			
	JIS 10K	910 (35.83)	140 (5.5)	74 (163.1)
	JIS 16K	910 (35.83)	140 (5.5)	74 (163.1)
	JIS 20K	920 (36.22)	140 (5.5)	74 (163.1)
80 (3 in)	PN 16 (EN 1092-1 B1)	870 (34.25)	160 (6.30)	74 (163.1)
	PN 40 (EN 1092-1 B1)			75 (165.4)
	PN 63 (EN 1092-1 B2)	910 (35.83)	170 (6.69)	79 (174.2)
	PN 100 (EN 1092-1 B2)		180 (7.09)	85 (187.4)
	CL150 (ASME B16.5)	880 (34.65)	152.4 (6.00)	76 (165.4)
	CL300 (ASME B16.5)	895 (35.24)	168.1 (6.62)	79 (174.2)
	CL600 (ASME B16.5)	920 (36.22)		82 (180.8)
	CL900 (ASME B16.5)	1100 (43.31) [1)]	190.5 (7.50)	94 (207.2)
	CL1500 (ASME B16.5)	1300 (51.18) [1)]	203.2 (8.00)	106 (233.7)
	JIS 10K	870 (34.25)	150 (5.91)	75 (165.4)
	JIS 16K	870 (34.25)	150 (5.91)	75 (165.4)
	JIS 20K	910 (35.83)	150 (5.91)	75 (165.4)
100 (4 in)	PN 16 (EN 1092-1 B1)	875 (34.45)	180 (7.09)	75 (165.4)
	PN 40 (EN 1092-1 B1)		190 (7.48)	76 (167.5)
	PN 63 (EN 1092-1 B2)	1060 (41.73)	200 (7.87)	86 (189.6)
	PN 100 (EN 1092-1 B2)	1080 (42.52) [1)]	210 (8.27)	94 (207.2)
	CL150 (ASME B16.5)	880 (34.65)	190.5 (7.50)	77 (169.8)
	CL300 (ASME B16.5)	1075 (42.32) [1)]	200.2 (7.88)	91 (200.6)
	CL600 (ASME B16.5)	1100 (43.31) [1)]	215.9 (8.50)	101 (222.7)
	CL900 (ASME B16.5)	1130 (44.49) [1)]	234.9 (9.25)	111 (244.7)
	CL1500 (ASME B16.5)	1150 (45.28) [1)]	241.3 (9.50)	126 (277.8)
	JIS 10K	1060 (41.7) [1)]	175 (6.9)	86 (189.6)
	JIS 16K	1060 (41.7) [1)]	175 (6.9)	85 (187.4)
	JIS 20K	1060 (41.7) [1)]	175 (6.9)	85 (187.4)

* On request

L dimension tolerance:

+0 / −3 mm (+0 / −0.118 in)

1) +0 / −8 mm (+0 / −0.31 in)

Devices with meter tube nominal diameter DN 100 (4 in.) and flange DN 80 to 150 (3 to 6 in)

Sensor with wetted parts made from stainless steel.

All dimensions and weights are specified in mm (in) or kg (lb).

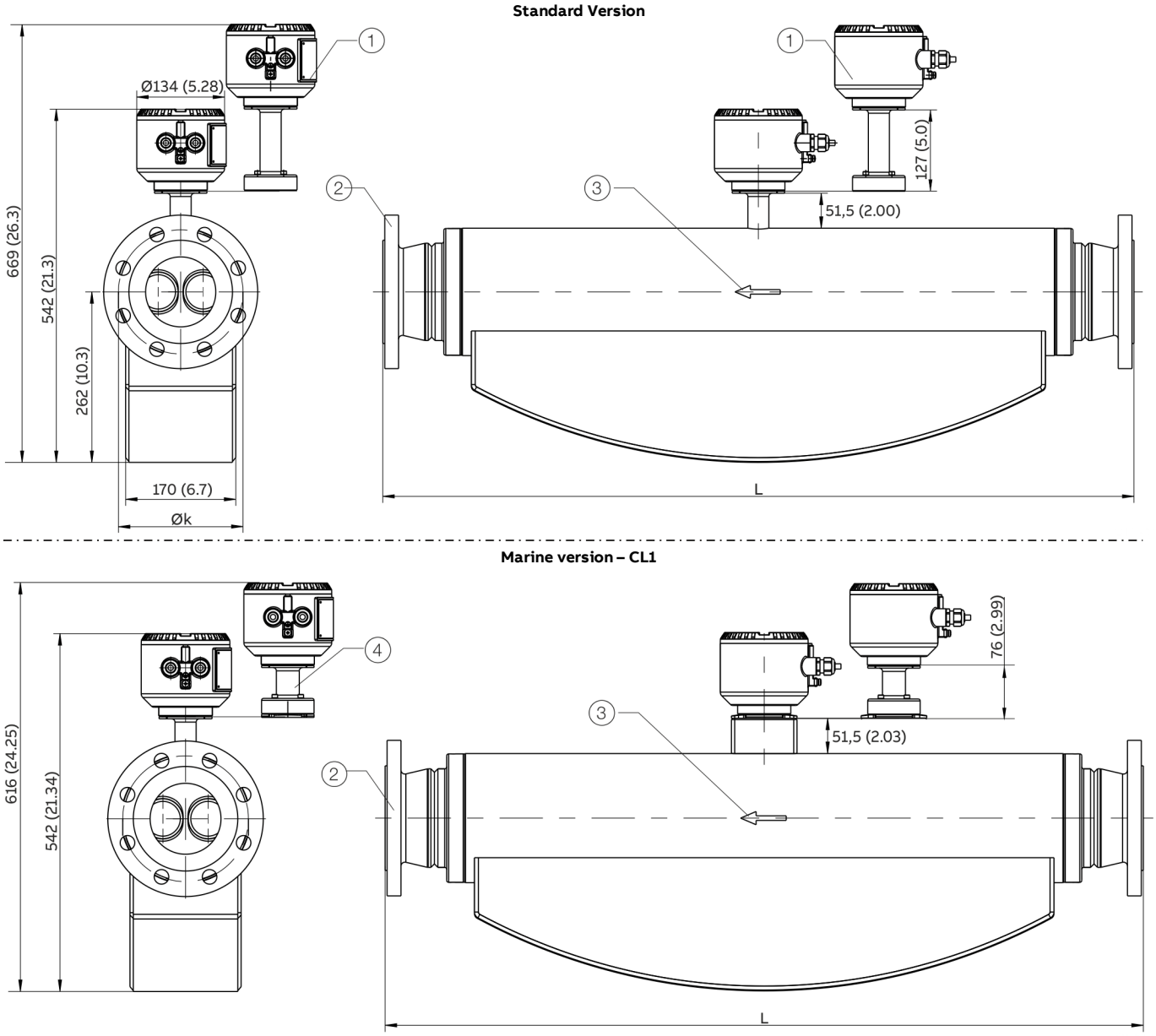

1. '**Extended tower length – TE1, TE2**' option or '**Burst pressure limits of the burst-proof sensor housing – PR5, PR6, PR7**' option.
2. Flange in accordance with EN 1092-1, ASME B16.5, ISO 7005 (connection dimensions for ASME flanges in accordance with ASME B16.5 (ANSI))
3. Flow direction
4. '**Extended tower length – TE3**' option

Figure 8: Remote mount design

... Flowmeter sensor

... Dimensions for devices with remote mount design

Meter tube nominal diameter DN 100 (4 in)				
DN / process connection		**L**	**Ø k**	**Weight max.**
80 (3 in)	PN 16 (EN 1092-1 B1)	1222 (48.11) [1]	160 (6.30)	126 (278)
	PN 40 (EN 1092-1 B1)			126 (278)
	PN 63 (EN 1092-1 B2)	1234 (48.58) [1]	170 (6.69)	130 (287)
	PN 100 (EN 1092-1 B2)		180 (7.09)	132 (291)
	CL150 (ASME B16.5)	1244 (48.98) [1]	152.4 (6.00)	127 (280)
	CL300 (ASME B16.5)		168.1 (6.62)	135 (298)
	CL600 (ASME B16.5)		168.1 (6.62)	138 (304)
	CL900 (ASME B16.5)	1470 (57.87) [1]	190.5 (7.50)	141 (311)
	CL1500 (ASME B16.5)	1500 (59.05) [1]	203.2 (8.00)	153 (337)
	JIS 10K	1275 (50.20) [1]	150 (5.91)	123 (271)
	JIS 16K	1275 (50.20) [3]	150 (5.91)	123 (271)
	JIS 20K	1275 (50.20) [3]	150 (5.91)	123 (271)
100 (4 in)	PN 16 (EN 1092-1 B1)	1123 (44.21) [3]	180 (7.09)	123 (271)
	PN 40 (EN 1092-1 B1)	1146 (45.12) [2]	190 (7.48)	126 (278)
	PN 63 (EN 1092-1 B2)	1304 (51.34) [1]	138 (5.43)	133 (293)
	PN 100 (EN 1092-1 B2)	1334 (52.52) [1]	150 (5.91)	141 (311)
	CL150 (ASME B16.5)	1145 (45.08) [2]	190.5 (7.50)	127 (280)
	CL300 (ASME B16.5)	1320 (51.97) [2]	200.2 (7.88)	139 (306)
	CL600 (ASME B16.5)	1336 (52.60) [3]	215.9 (8.50)	141 (311)
	CL900 (ASME B16.5)	1380 (54.33) [1]	234.9 (9.25)	160 (353)
	CL1500 (ASME B16.5)	1400 (55.12) [1]	241.3 (9.50)	174 (384)
	JIS 10K	1150 (45.28) [1]	175 (6.89)	126 (278)
	JIS 16K	1150 (45.28) [1]	175 (6.89)	126 (278)
	JIS 20K	1150 (45.28) [1]	175 (6.89)	126 (278)
150 (6 in)	PN 16 (EN 1092-1 B1)	1255 (49.41) [2]	240 (9.44)	131 (289)
	PN 40 (EN 1092-1 B1)	1297 (51.06) [1]	250 (9.84)	139 (306)
	CL150 (ASME B16.5)	1252 (49.29) [3]	241.3 (9.50)	137 (302)
	CL600 (ASME B16.5)	1400 (55.12) [1]	–	–
	JIS 10K	1300 (51.18) [1]	240 (9.44)	130 (287)
	JIS 16K	1300 (51.18) [1]	240 (9.44)	130 (287)
	JIS 20K	1308 (51.50) [1]	240 (9.44)	130 (287)

L dimension tolerances

1) +0 / −10 mm (+0 / −0.39 in)
2) +0 / −5 mm (+0 / −0.20 in)
3) +0 / −8 mm (+0 / −0.31 in)

Devices with meter tube nominal diameter DN 150 (6 in) and flange DN 100 to DN 200 (4 to 8 in)

Sensor with wetted parts made from stainless steel.

All dimensions and weights are specified in mm (in) or kg (lb).

Standard Version

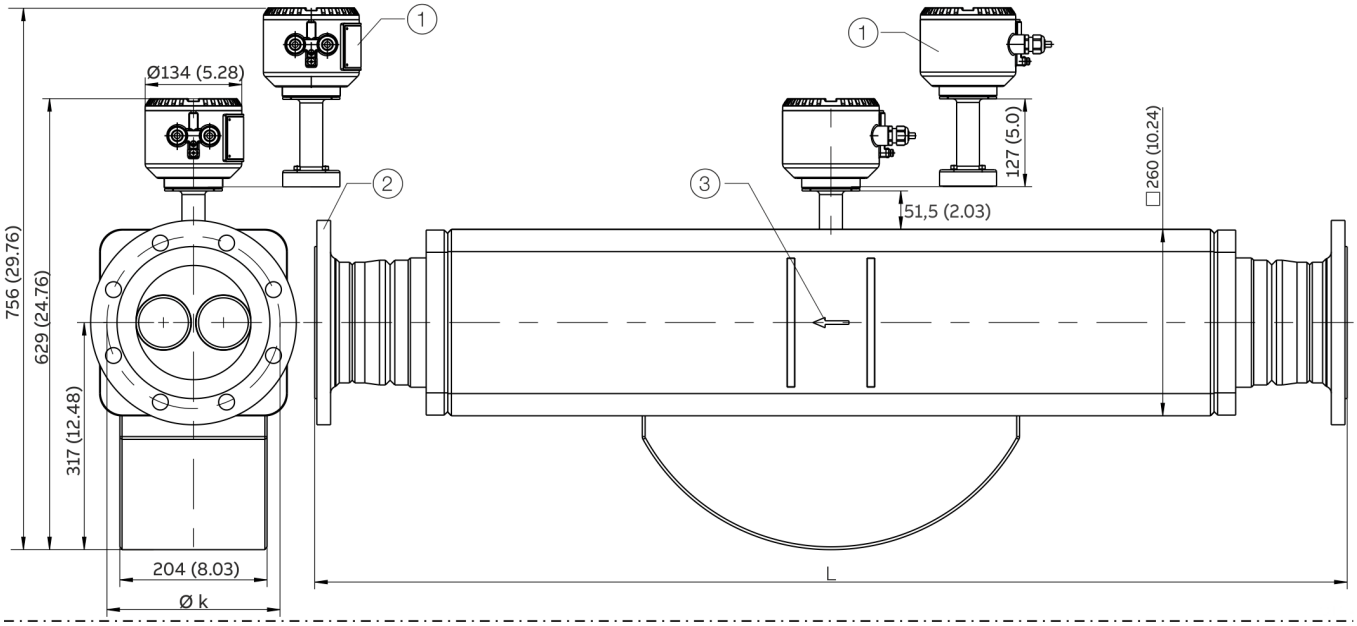

Marine version – CL1

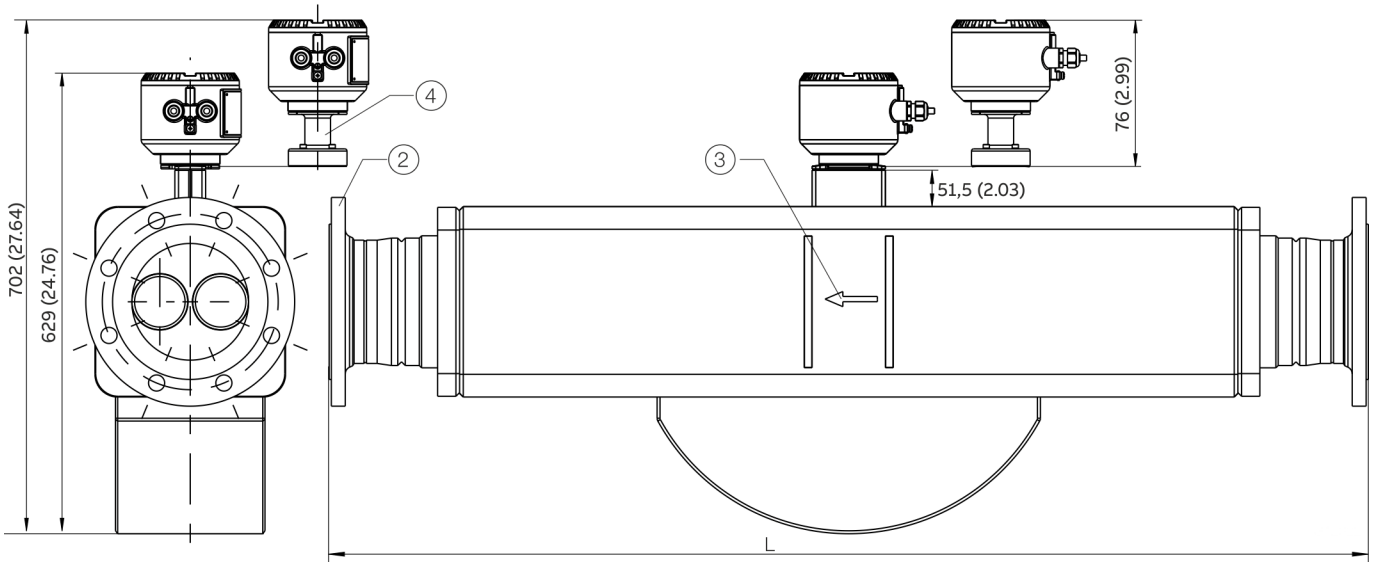

1. '**Extended tower length – TE1, TE2**' option or '**Burst pressure limits of the burst-proof sensor housing – PR5, PR6, PR7**' option
2. Flange in accordance with EN 1092-1, ASME B16.5, ISO 7005 (connection dimensions for ASME flanges in accordance with ASME B16.5 (ANSI))
3. Flow direction
4. '**Extended tower length – TE3**' option

Figure 9: Remote mount design

… Flowmeter sensor

… Dimensions for devices with remote mount design

Meter tube nominal diameter DN 150 (6 in)				
DN / process connection		**L**	**Ø k**	**Weight max.**
100 (4 in)	PN 16 (EN 1092-1 B1)	1569 (61.77) [1]	180 (7.09)	175 (386)
	PN 40 (EN 1092-1 B1)	1599 (62.95) [1]	190 (7.48)	179 (395)
	CL150 (ASME B16.5)	1630 (64.17) [1]	190.5 (7.50)	182 (401)
	CL300 (ASME B16.5)	1650 (64.96) [1]	200.2 (7.88)	188 (414)
	CL600 (ASME B16.5)	1675 (65.94) [1]	215.9 (8.50)	198 (437)
	CL900 (ASME B16.5)	1705 (67.13) [1]	234.9 (9.25)	208 (459)
	CL1500 (ASME B16.5)	1725 (67.91) [1]	241.3 (9.50)	223 (492)
	JIS 10K	1485 (58.46) [1]	175 (6.89)	179 (395)
	JIS 16K	1485 (58.46) [1]	185 (7.28)	181 (399)
	JIS 20K	1485 (58.46) [1]	185 (7.28)	181 (399)
150 (6 in)	PN 16 (EN 1092-1 B1)	1421 (55.94) [1]	240 (9.45)	178 (392)
	PN 40 (EN 1092-1 B1)	1459 (57.44) [2]	250 (9.84)	186 (410)
	CL150 (ASME B16.5)	1482 (58.35) [2]	241.3 (9.50)	185 (408)
	CL300 (ASME B16.5)	1503 (59.17) [3]	269.7 (10.62)	203 (448)
	CL600 (ASME B16.5)	1555 (61.22) [3]	292.1 (11.50)	225 (496)
	CL900 (ASME B16.5)	1605 (63.19) [1]	317.5 (12.5)	249 (549)
	CL1500 (ASME B16.5)	1665 (65.55) [1]		291 (642)
	JIS 10K	1425 (56.10) [1]	240 (9.45)	186 (410)
	JIS 16K	1456 (57.32) [1]	260 (6.30)	187 (412)
	JIS 20K	1464 (57.64) [1]	260 (6.30)	187 (412)
200 (8 in)	PN 16 (EN 1092-1 B1)	–*	–*	–*
	PN 40 (EN 1092-1 B1)	1637 (64.45)	320 (12.6)	209 (461)
	CL150 (ASME B16.5)	1650 (64.96) [1]	298.5 (11.75)	204 (450)
	CL300 (ASME B16.5)	1664 (65.51) [3]	330.2 (13.0)	229 (505)
	CL600 (ASME B16.5)	1730 (68.11) [3]	–	–
	JIS10K	1583 (62.32) [2]	290 (11.42)	209 (461)
	JIS 16K	1615 (63.58) [1]	305 (12.01)	210 (463)
	JIS 20K	1623 (63.90) [1]	305 (12.01)	210 (463)

* On request

L dimension tolerances

1) +0 / −15 mm (+0 / −0.59 in)
2) +0 / −5 mm (+0 / −0.20 in)
3) +0 / −8 mm (+0 / −0.31 in)

Devices DN 15 to 150 (½ to 6 in) in NAMUR standard installation lengths (order option S5, S7)

Sensor with wetted parts made from stainless steel.

All dimensions and weights are specified in mm (in) or kg (lb).

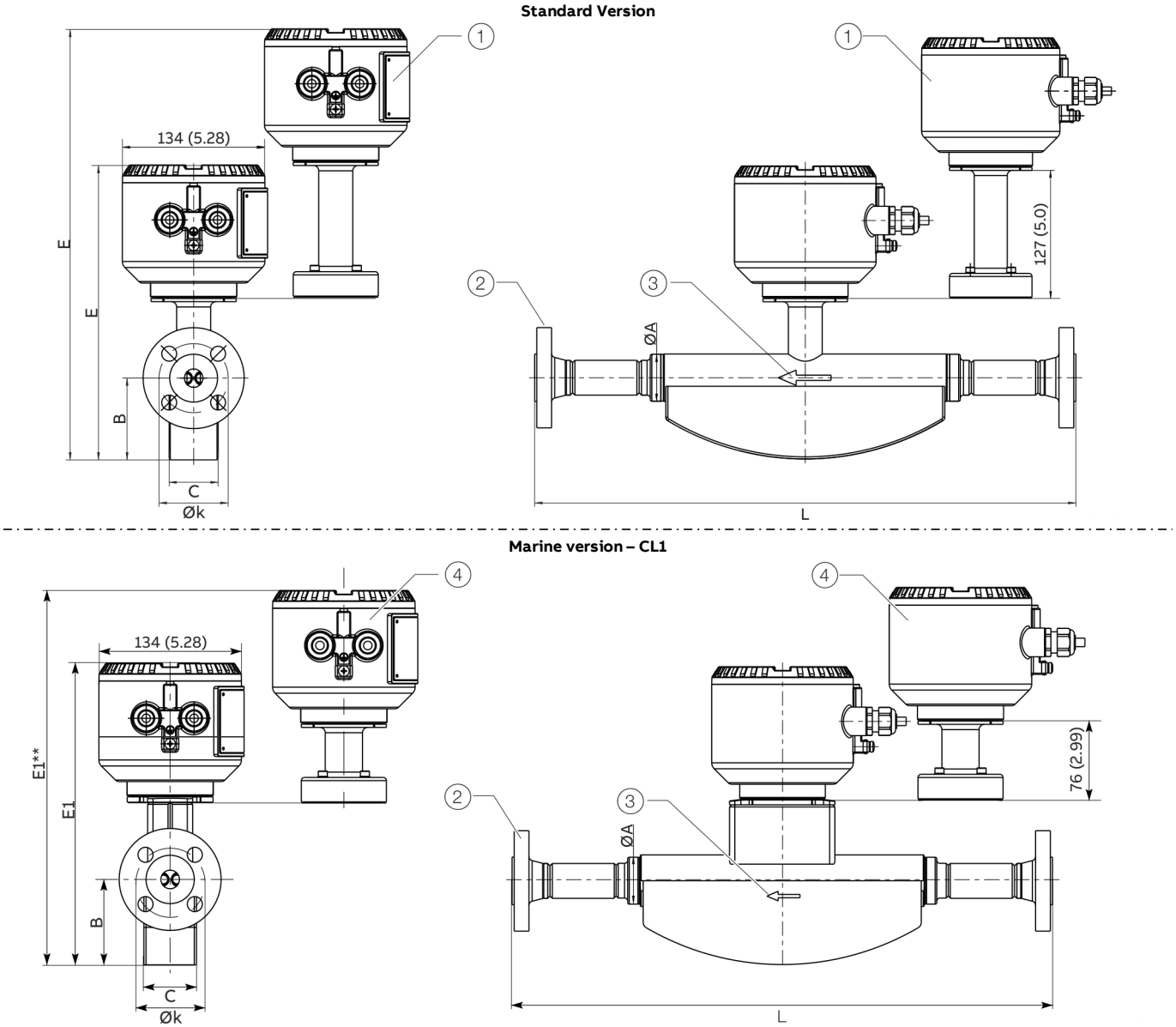

1. '**Extended tower length – TE1, TE2**' option or '**Burst pressure limits of the burst-proof sensor housing – PR5, PR6, PR7**' option
2. Flange in accordance with EN 1092-1
3. Flow direction
4. '**Extended tower length – TE3**' option

* Standard design: Devices with '**Extended tower length – TE1, TE2**' option or '**Burst pressure limits of the burst-proof sensor housing – PR5, PR6, PR7**' option

** Marine version – CL1: Devices with '**Extended tower length – TE3**' option

Figure 10: Remote mount design

… Flowmeter sensor

… Dimensions for devices with remote mount design

Devices DN 15 to 150 in NAMUR standard installation lengths									
Meter tube	**Process connection EN 1092-1 B1**	**L**	**Ø k**	**Ø A**	**B**	**C**	**E**	**E1**	**Approximate weight**
DN 15 (½ in)	DN 15 (½ in) / PN 40	510 (20.08) [1]	60 (2.4)	44.5 (1.8)	77 (3.0)	46 (1.8)	283 (11.1) 410* (16.1*)	283 (11.1) 357** (14.1**)	13.5 (29.8)
DN 25 (1 in)	DN 25 (1 in) / PN 40	600 (23.62) [1]	75 (3.0)	69.5 (2.74)	103 (4.06)	62 (2.44)	324 (12.8) 451* (17.8*)	324 (12.8) 398** (15.7**)	15 (33.1)
DN 50 (1 in)	DN 50 (1 in) / PN 40	715 (28.15) [1]	125 (4.92)	99 (3.9)	125 (4.92)	80 (3.15)	354 (13.9) 481* (18.94*)	354 (13.9) 428** (16.9**)	31 (68.3)
DN 80 (3 in)	DN 80 (3 in) / PN 40	915 (36.02) [1]	160 (6.30)	155 (6.1)	183 (7.2)	123 (4.84)	445 (17.52) 572* (22.52*)	–	74 (163)
DN 100 (4 in)	DN 100 (4 in) / PN 16	1400 (55.12) [2]	180 (7.09)	195 (7.68)	261 (10.28)	168 (6.61)	541 (21.3) 668* (26.3*)	–	123 (271)
DN 150 (6 in)	DN 150 (6 in) / PN 16	1700 (66.93) [3]	240 (9.45)	260 (10.24)	320 (12.6)	205 (8.07)	630 (24.8) 757* (29.8*)	–	178 (392)

* Standard design: Devices with '**Extended tower length – TE1, TE2**' option or '**Burst pressure limits of the burst-proof sensor housing – PR5, PR6, PR7**' option

** Marine version – CL1: Devices with '**Extended tower length – TE3**' option

L dimension tolerances

1) +0 / −3 mm (+0 / −0.118 in)
2) +0 / −5 mm (+0 / −0.20 in)
3) +0 / −20 mm (+0 / −0.79 in)

Devices with meter tube nominal diameter DN 15 to 80 (½ to 3 in) and connections in accordance with SMS 1145, DIN 11851, DIN 32676, DIN ISO 228, ASME BPE, and ASME B 1.20.1

Sensor with wetted parts made from stainless steel.

All dimensions and weights are specified in mm (in) or kg (lb).

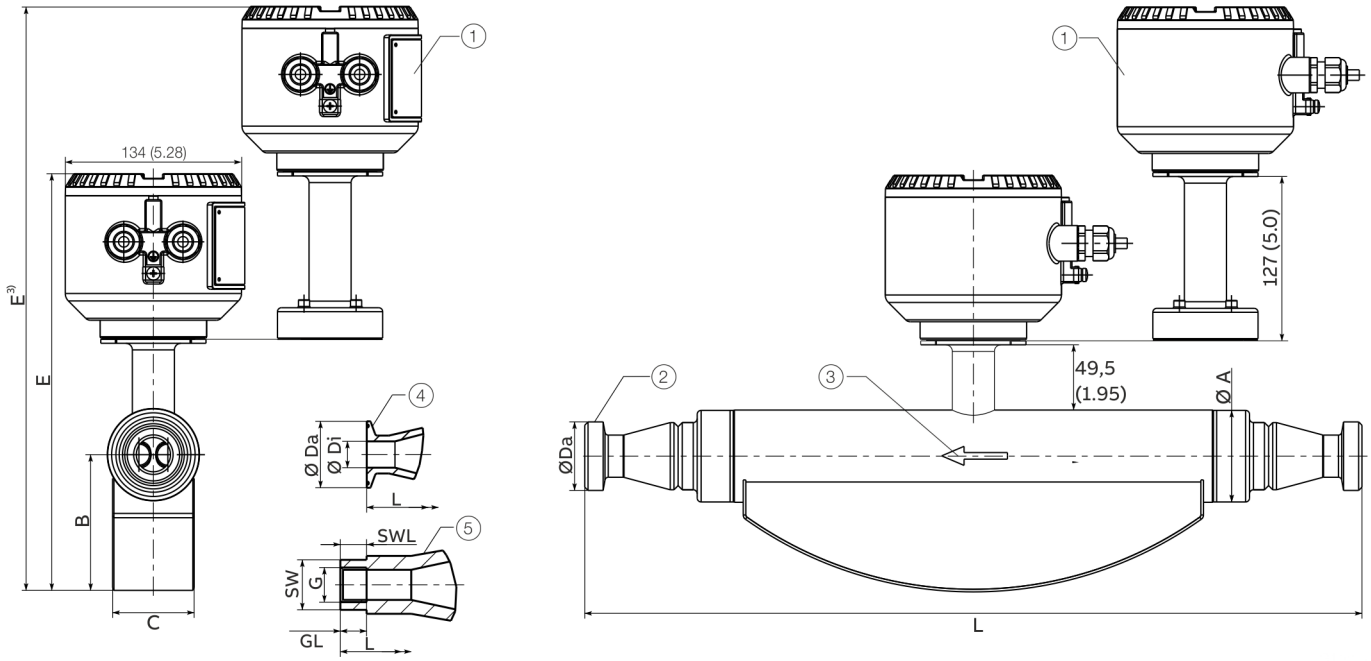

1. '**Extended tower length – TE1, TE2**' option or '**Burst pressure limits of the burst-proof sensor housing – PR5, PR6, PR7**' option
2. Threaded spuds in accordance with DIN 11851 and SMS 1145
3. Flow direction
4. Clamping connection in accordance with DIN 32676 and ASME BPE
5. Female thread connection in accordance with DIN ISO 228 and ASME B 1.20.1

Figure 11: Remote mount design

Process connection in accordance with SMS 1145 meter tube nominal diameter DN 25 to 80 (1 to 3 in)

Meter tube	Process connection		L	Ø DA	Ø Di	Ø A	B	C	E	Approximate weight	
DN	DN	PN								Aluminum*	Stainless steel**
25 (1 in)	25 (1 in)	6	590 (23.2)	RD 40x⅙ in	22.6 (0.89)	69.5	103	62	317 / 444***	11 / 12***	14 / 15***
	40 (1 ½ in)			RD 60x⅙ in	38 (1.50)	(2.74)	(4.06)	(2.44)	(12.48 / 17.48***)	(24 / 27***)	(31 / 33***)
50 (2 in)	40 (1 ½ in)	6	763 (30.0)	RD 60x⅙ in	35.5 (1.40)	99	125	80	354 / 481***	27 / 28***	30 / 31***
	50 (2 in)		740 (29.1)	RD 70x⅙ in	48.5 (1.91)	(3.46)	(4.92)	(3.15)	(13.94 / 18.94***)	(60 / 62***)	(66 / 68***)
	65 (2 ½ in)			RD 85x⅙ in	60.5 (2.38)						
80 (3 in)	65 (2 ½ in)		990 (39.0)	RD 85x⅙ in	60.5 (2.38)	155	183	123	445 / 572***	68 / 69***	71 / 72***
	80 (3 in)		940 (37.0)	RD 98x¼ in	72.6 (2.86)	(6.10)	(7.20)	(4.84)	(17.52 / 22.52***)	(150 / 152***)	(157 / 159***)

* Devices with terminal boxes made from aluminum.

** Devices with terminal boxes made from stainless steel.

*** Devices with '**Extended tower length – TE1, TE2**' option or '**Burst pressure limits of the burst-proof sensor housing – PR5, PR6, PR7**' option.

… Flowmeter sensor

… Dimensions for devices with remote mount design

Process connection in accordance with DIN 11851 meter tube nominal diameter DN 15 to 80 (½ to 3 in.)

Meter tube	Process connection		L	Ø DA	Ø Di	Ø A	B	C	E	Approximate weight	
DN	DN	PN								Aluminum*	Stainless steel**
15 (½ in)	10 (⅜ in)	40	413 (16.3)	RD 28x⅛ in	10 (0.39)	44.5	77 (3.03)	46 (1.81)	278 / 405***	9 / 10***	12 / 13***
	15 (½ in)			RD 34x⅛ in	16 (0.63)	(1.75)			(10.94 / 15.94***)	(20 / 22***)	(27 / 29***)
	20 (¾ in)			RD 44x⅙ in	20 (0.79)						
25 (1 in)	20 (¾ in)		590 (23.2)	RD 44x⅙ in	20 (0.79)	69.5	103	62	317 / 444***	11 / 12***	14 / 15***
	25 (1 in)			RD 52x⅙ in	26 (1.02)	(2.74)	(4.06)	(2.44)	(12.48 / 17.48***)	(24 / 27***)	(31 / 33***)
	40 (1 ½ in)			RD 65x⅙ in	38 (1.5)						
50 (2 in)	40 (1 ½ in)		763 (30.0)	RD 65x⅙ in	38 (1.5)	99 (3.46)	125	80	354 / 481***	27 / 28***	30 / 31***
	50 (2 in)	25	740 (29.1)	RD 78x⅙ in	50 (1.97)		(4.92)	(3.15)	(13.94 / 18.94***)	(60 / 62***)	(66 / 68***)
	65 (2 ½ in)			RD 95x⅙ in	66 (2.6)						
80 (3 in)	65 (2 ½ in)		990 (39.0)	RD 95x⅙ in	66 (2.6)	155	183	123	445 / 572***	68 / 69***	71 / 72***
	80 (3 in)		940 (37.0)	RD 110x¼ in	81 (3.19)	(6.10)	(7.20)	(4.84)	(17.52 / 22.52***)	(150 / 152***)	(157 / 159***)
	100 (4 in)			RD 130x¼ in	100 (3.94)						

Process connection in accordance with DIN 32676 meter tube nominal diameter DN 15 to 80 (½ to 3 in.)

Meter tube	Process connection		L	Ø DA	Ø Di	Ø A	B	C	E	Approximate weight	
DN	DN	PN								Aluminum*	Stainless steel**
15 (½ in)	10 (⅜ in)	40	413 (16.3)	34 (1.34)	10 (0.39)	44.5	77 (3.03)	46 (1.81)	278 / 405***	9 / 10***	12 / 13***
	15 (½ in)				16 (0.63)	(1.75)			(10.94 / 15.94***)	(20 / 22***)	(27 / 29***)
	20 (¾ in)				20 (0.79)						
25 (1 in)	20 (¾ in)		590 (23.2)		20 (0.79)	69.5	103	62	317 / 444***	11 / 12***	14 / 15***
	25 (1 in)			50.5 (1.99)	26 (1.02)	(2.74)	(4.06)	(2.44)	(12.48 / 17.48***)	(24 / 27***)	(31 / 33***)
	40 (1 ½ in)				38 (1.5)						
50 (2 in)	40 (1 ½ in)		763 (30.0)		38 (1.5)	99 (3.46)	125	80	354 / 481***	27 / 28***	30 / 31***
	50 (2 in)	25	740 (29.1)	64 (2.52)	50 (1.97)		(4.92)	(3.15)	(13.94 / 18.94***)	(60 / 62***)	(66 / 68***)
	65 (2 ½ in)			91 (3.58)	66 (2.6)						
80 (3 in)	65 (2 ½ in)	10	950 (37.4)		66 (2.6)	155	183	123	445 / 572***	68 / 69***	71 / 72***
	80 (3 in)		910 (35.83)	106 (4.17)	81 (3.19)	(6.10)	(7.20)	(4.84)	(17.52 / 22.52***)	(150 / 152***)	(157 / 159***)
	100 (4 in)			119 (4.69)	100 (3.94)						

* Devices with terminal boxes made from aluminum.

** Devices with terminal boxes made from stainless steel.

*** Devices with '**Extended tower length – TE1, TE2**' option or '**Burst pressure limits of the burst-proof sensor housing – PR5, PR6, PR7**' option.

L dimension tolerance: +0 / −3 mm (+0 / −0.118 in)

Dimensions for sensors featuring meter tubes with nominal diameter DN 15 to 80 (½ to 3 in.) and process connection in accordance with ASME BPE

Meter tube	Process connection		L	Ø DA	Ø Di	Ø A	B	C	E	Approximate weight	
DN	DN	PN								Aluminum[1]	Stainless steel[2]
15 (½ in)	⅜ in-Type A	10	–	–	–	44.5 (1.75)	77 (3.03)	46 (1.81)	278 / 405[3] (10.94 / 15.94[3])	9 / 10[3] (20 / 22[3])	12 / 13[3] (27 / 29[3])
	½ in-Type A		433 (17.05)	25 (0.98)	9.4 (0.37)						
	¾ in-Type A		–	–	–						
25 (1 in)	¾ in-Type A		–	–	–	69.5 (2.74)	103 (4.06)	62 (2.44)	317 / 444[3] (12.48 / 17.48[3])	11 / 12[3] (24 / 27[3])	14 / 15[3] (31 / 33[3])
	1 in-Type B		590 (23.23)	50.4 (1.98)	22.1 (0.87)						
	1 ½ in-Type B		590 (23.23)	50.4 (1.98)	34.8 (1.37)						
50 (2 in)	1 ½ in-Type B		–	–	–	99 (3.46)	125 (4.92)	80 (3.15)	354 / 481[3] (13.94 / 18.94[3])	27 / 28[3] (60 / 62[3])	30 / 31[3] (66 / 68[3])
	2 in-Type B		740 (29.13)	63.9 (2.52)	47.5 (1.87)						
	2 ½ in-Type B		–	–	–						
80 (3 in)	2 ½ in-Type B		950 (37.40)	77.4 (3.05)	60.2 (2.37)	155 (6.10)	183 (7.20)	183 (7.20)	445 / 572[3] (17.52 / 22.52[3])	68 / 69[3] (150 / 152[3])	71 / 72[3] (157 / 159[3])
	3 in-Type B		910 (35.83)	90.9 (3.19)	72.9 (2.87)						
	4 in-Type B		910 (35.83)	118.9 (4.68)	97.4 (3.83)						

Process connection in accordance with DIN ISO 228 and ASME B 1.20.1, meter tube nominal diameter DN 15 (½ in)

Meter tube	Process connection		L	GL[4]	WS[5]	SWL[5]	Ø A	B	C	E	Approximate weight	
DN	DN / G	PN									Aluminum[1]	Stainless steel[2]
15 (½ in)	8 (¼ in) / G ¼ in	100	450 (17.72)	10 (0.39)	19	10 (0.39)	44.5 (1.75)	77 (3.03)	46 (1.81)	278 / 405[3] (10.94 / 15.94[3])	9 / 10[3] (20 / 22[3])	12 / 13[3] (27 / 29[3])
	15 (½ in) / G ½ in			13.5 (0.53)	27	15 (0.59)						
	25 (1 in) / G 1 in		490 (19.29)	17 (0.67)	50	20 (0.79)						
	15 (½ in) / ½ in NPT		450 (17.72)	15.6 (0.61)	27	15 (0.59)						

1 Devices with terminal boxes made from aluminum.

2 Devices with terminal boxes made from stainless steel.

3 Devices with '**Extended tower length – TE1, TE2**' option or '**Burst pressure limits of the burst-proof sensor housing – PR5, PR6, PR7**' option.

4 Dimension GL: Specification of thread length of the female thread.

5 Dimension SW: Specification of width across flats in mm, dimension SWL: Specification of wrench flat length in mm.

L dimension tolerance: +0 / −3 mm (+0 / −0.118 in)

… Flowmeter sensor

Dimensions for devices with wetted parts made from C4 or C22 nickel alloy

For devices with wetted parts made from C4 or C22 nickel alloy, the installation length (L) is different from previous tables. All other dimensions and the weight are unchanged.
Dimensions in mm (in).

Dimensions for sensors with process connection in accordance with EN 1092-1 and ASME B16.5 (ANSI)

Meter tube nominal diameter	Process connection	L EN 1092-1 B1 PN 16	L EN 1092-1 B1 PN 40	L EN 1092-1 B2 PN 63	L EN 1092-1 B2 PN 100	L ASME CL150	L ASME CL300	L ASME CL600	L JIS 10K
DN 15 (½ in)	DN 10 (¼ in)	–	450 (17.8)	450 (17.8)	450 (17.8)	–	–	–	450 (17.8)
	DN 15 (½ in)	–	447 (17.6)	447 (17.6)	447 (17.6)	447 (17.6)	447 (17.6)	447 (17.6)	447 (17.6)
	DN 20 (¾ in)	–	427 (17.8)	427 (17.8)	427 (17.8)	427 (17.8)	427 (17.8)	427 (17.8)	427 (17.8)
DN 25 (1 in)	DN 20 (¾ in)	–	647 (25.5)	647 (25.5)	647 (25.5)	647 (25.5)	647 (25.5)	647 (25.5)	647 (25.5)
	DN 25 (1 in)	–	608 (24)	608 (24)	608 (24)	608 (24)	608 (24)	608 (24)	608 (24)
	DN 40 (1½ in)	–	577 (22.7)	577 (22.7)	577 (22.7)	577 (22.7)	577 (22.7)	577 (22.7)	577 (22.7)
DN 50 (2 in)	DN 40 (1½ in)	–	815 (32.1)	815 (32.1)	815 (32.1)	815 (32.1)	815 (32.1)	815 (32.1)	815 (32.1)
	DN 50 (2 in)	–	765 (30.1)	765 (30.1)	765 (30.1)	765 (30.1)	765 (30.1)	765 (30.1)	765 (30.1)
	DN 65 (2½ in)	–	820 (32.3)	820 (32.3)	820 (32.3)	793 (31.2)	793 (31.2)	793 (31.2)	820 (32.3)
DN 80 (3 in)	DN 65 (2½ in)	–	1011 (39,8)	1011 (39,8)	1011 (39,8)	1011 (39,8)	1011 (39,8)	1011 (39,8)	1011 (39,8)
	DN 80 (3 in)	–	976 (38.4)	–	976 (38.4)	976 (38.4)	976 (38.4)	976 (38.4)	976 (38.4)
	DN 100 (4 in)	976 (38.4)	976 (38.4)	976 (38.4)	976 (38.4)	976 (38.4)	976 (38.4)	976 (38.4)	976 (38.4)
DN 100 (4 in)	DN 80 (3 in)	1357 (53.4)	1357 (53.4)	1357 (53.4)	1357 (53.4)	1357 (53.4)	1357 (53.4)	1357 (53.4)	1357 (53.4)
	DN 100 (4 in)	1280 (50.4)	1280 (50.4)	1280 (50.4)	1280 (50.4)	1280 (50.4)	1280 (50.4)	1280 (50.4)	1280 (50.4)
	DN 150 (6 in)	1261 (49.6)	1261 (49.6)	1261 (49.6)	1261 (49.6)	1261 (49.6)	1261 (49.6)	1261 (49.6)	1261 (49.6)
DN 150 (6 in)	DN 100 (4 in)	1592 (62.7)	1592 (62.7)	1632 (64.3)	1632 (64.3)	1592 (62.7)	1632 (64.3)	1632 (64.3)	1592 (62.7)
	DN 150 (6 in)	1502 (59.1)	1502 (59.1)	1542 (60.7)	1542 (60.7)	1502 (59.1)	1542 (60.7)	1542 (60.7)	1502 (59.1)

L dimension tolerance:

- Meter tube nominal diameter DN 15 to 50 (½ to 2 in): +0 / −5 mm (+0 / −0.2 in)
- Meter tube nominal diameter DN 80 (3 in): +0 / −8 mm (+0 / −0.315 in)
- Meter tube nominal diameter DN 100 (4 in): +0 / −15 mm (+0 / −0.59 in)
- Meter tube nominal diameter DN 150 (6 in): +0 / −20 mm (+0 / −0.79 in)

Ordering information

Note

For additional information on dependencies and restrictions, and for help on product selection, please refer to the Online Product Selection Assistant (PSA) at www.abb.us/flow-selector.

CoriolisMaster FCB430/FCB450

Main ordering information											
CoriolisMaster FCB430 Coriolis mass flow meter	**FCB430**	**XX**	**XX**	**XXXXX**	XX	XX	X	X	XX	XX	X
CoriolisMaster FCB450 Coriolis mass flow meter	**FCB450**	**XX**	**XX**	**XXXXX**	XX	XX	X	X	XX	XX	X
Explosion protection											
Without		Y0									
General purpose (FM3810, ANSI/UL61010-1)		G1									
ATEX / IECEx (Zone 2 / 22)		A2									
ATEX / IECEx (Zone 1 / 21)		A1									
cFMus version Class 1 Div. 2		F2									
cFMus version, Class 1, Div. 1 (Zone 1 / 21)		F1									
NEPSI (Zone 2 / 22)		S2									
NEPSI (Zone 1 / 21)		S1									
Design / terminal box material / cable glands											
Integral mount – see transmitter housing			Y0								
Remote mount / aluminum / 1 × M20 × 1.5			U1								
Remote mount / aluminum / 1 × NPT ½ in			U2								
Remote mount / stainless steel / 1 × M20 × 1.5			A1								
Remote mount / stainless steel / 1 × NPT ½ in			A2								
Nominal diameter / nominal connection diameter											
DN 15 (½ in) / DN 10 (⅜ in)				015E1							
DN 15 (½ in) / DN 15 (½ in)				015R0							
DN 15 (½ in) / DN 20 (¾ in)				015R1							
DN 25 (1 in) / DN 20 (¾ in)				025E1							
DN 25 (1 in) / DN 25 (1 in)				025R0							
DN 25 (1 in) / DN 40 (1½ in)				025R2							
DN 50 (2 in) / DN 40 (1½ in)				050E1							
DN 50 (2 in) / DN 50 (2 in)				050R0							
DN 50 (2 in) / DN 65 (2½ in)				050R1							
DN 80 (3 in) / DN 65 (2½ in)				080E1							
DN 80 (3 in) / DN 80 (3 in)				080R0							
DN 80 (3 in) / DN 100 (4 in)				080R1							
DN 100 (4 in) / DN 80 (3 in)				100E1							
DN 100 (4 in) / DN 100 (4 in)				100R0							
DN 100 (4 in) / DN 150 (6 in)				100R2							
DN 150 (6 in) / DN 100 (4 in)				150E2							
DN 150 (6 in) / DN 150 (6 in)				150R0							
DN 150 (6 in) / DN 200 (8 in)				150R2							

Continued on next page

… Flowmeter sensor

… Ordering information

Main ordering information						
CoriolisMaster FCB430 Coriolis mass flow meter	**XX**	**XX**	**X**	XX	XX	X
CoriolisMaster FCB450 Coriolis mass flow meter	**XX**	**XX**	**X**	XX	XX	X
Process connection						
Flange DIN PN 16	D2					
Flange DIN PN 40	D4					
Flange DIN PN 63	D5					
Flange DIN PN 100	D6					
Flange EN 1092-1 PN 40, NAMUR installation length (DN 15, DN 25, DN 50, DN 80)	S5					
Grooved flange PN40 EN1092-10-D	S6					
Flange EN 1092-1 PN 16, NAMUR installation length (DN 100, DN 150)	S7					
Flange ANSI / ASME B16.5, Class 150	A1					
Flange ANSI / ASME B16.5, Class 300	A3					
Flange ANSI / ASME B16.5, Class 600	A6					
Flange ANSI / ASME B16.5 Class 900 (p-t rating Cl 600)	A7					
Flange ANSI / ASME B16.5 Class 1500 (p-t rating Cl 600)	A8					
Flange, JIS 10K	J1					
Flange JIS 20K	J3					
Flange JIS 16K	J5					
Threaded coupling SMS 1145 for pipes according to DIN 11866 Series A	K1					
Tri-Clamp in acc. with DIN 32676	T1					
Tri-Clamp in acc. with ASME BPE	T3					
Cable gland in acc. with DIN 11851	F1					
NPT female thread	N5					
Female G-thread	M5					
Others	Z9					
Material for wetted parts						
Stainless steel		A1				
Nickel alloy		C1				
Flow rate calibration						
Flow ± 0.40 % of measured value, gas 1 % of measured value			A[1]			
Flow ± 0.25 % of measured value, gas 1 % of measured value			B[1]			
Flow ± 0.2 % of measured value, gas 1 % of measured value			E[1]			
Flow ± 0.15 % of measured value, gas 0.5 % of measured value			C[2]			
Flow ± 0.10 % of measured value, gas 0.5 % of measured value			D[2]			
Flow / return ± 0.40 % of measured value, gas 1 % of measured value			J[1]			
Flow / return ± 0.25 % of measured value, gas 1 % of measured value			K[1]			
Flow / return ± 0.20 % of measured value, gas 1 % of measured value			N[1]			
Flow / return ± 0.15 % of measured value, gas 0.5 % of measured value			L[2]			
Flow / return ± 0.10 % of measured value, gas 0.5 % of measured value			M[2]			
Others			Z			

1 Only for CoriolisMaster FCB430

2 Only for CoriolisMaster FCB450

Continued on next page

Main ordering information				
CoriolisMaster FCB430 Coriolis mass flow meter	**X**	**XX**	**XX**	**X**
CoriolisMaster FCB450 Coriolis mass flow meter	**X**	**XX**	**XX**	**X**
Density calibration				
Density: 10 g/l	1[1]			
Density: 2 g/l	3[2]			
Density: 1 g/l	4[2]			
Density: 0.4 g/l	5[2]			
Others	9			
Connection Design / Transmitter Housing Type / Transmitter Housing Material / Cable Glands				
Integral mount / dual-compartment housing / aluminum / 3 × M20 × 1.5		D1		
Integral mount / dual-compartment housing / aluminum / 3 × NPT ½ in		D2		
Remote mount / dual-compartment / aluminium / 3 × NPT ½ in (Exd, XP)		D5		
Remote mount / dual-compartment / aluminium / 3 × M20 x 1.5 (Exd, XP)		D6		
Integral mount / single-compartment housing / aluminum / 3 × M20 × 1.5		S1		
Integral mount / single-compartment housing / aluminum / 3 × NPT ½ in		S2		
Remote mount / not specified		Y0		
Others		Z9		
Outputs				
Current output 1 (active or passive), digital output 1 & 2 (passive), HART®, PROFIBUS DP®			D1	
Current output 1 (active), digital output 1 & 2 (passive), HART®, Modbus®			M1	
Current output 1 (active / passive), digital output 1 & 2 (passive), digital output 3 (active), HART®, Modbus®			M6	
Current output 1 (active / passive), digital output 1 & 2 (passive), HART			G0	
Current output 1 (active / passive), digital output 1 & 2 (passive), HART 1 port Std. Ethernet			E2[3]	
Current output 1 (active / passive), digital output 1 & 2 (passive), HART 2 port Std. Ethernet			E3[3]	
Current output 1 (active / passive), digital output 1 & 2 (passive), HART 1 port Std. Ethernet + POE			E4[3]	
Current output 1 (active / passive), digital output 1 & 2 (passive), 24 V DC transmitter loop power supply, HART			G1	
Current output 1 (active / passive), digital output 1 & 2 (passive), current output 2 (passive), HART			G2	
Current output 1 (active / passive), digital output 1 & 2 (passive), current output 2 (passive), current output 3 (passive), HART			G3	
Current output 1 (active / passive), digital output 1 & 2 (passive), current output 2 (passive), 24 V DC transmitter loop power supply, HART			G4	
Current output 1 (active / passive), digital output 1 & 2 (passive), HART Advanced Physical Layer (APL)			L1[4]	
Without			Y0	
Power supply				
100 to 230 V AC				A
11 to 30 V DC				C
Without				Y

1 Only for CoriolisMaster FCB430

2 Only for CoriolisMaster FCB450

3 Available with single-compartment housing only in 'Not Ex' or 'Zone 2' or 'Div 2' design

4 Available with dual-compartment housing only. Available for Profinet, Modbus TCP, and web server.

Continued on next page

… Flowmeter sensor

… Ordering information

Additional ordering information

Additional ordering information					
CoriolisMaster FCB430 Coriolis mass flow meter	**XX**	**XXX**	**XXX**	**XXX**	**XXX**
CoriolisMaster FCB450 Coriolis mass flow meter	**XX**	**XXX**	**XXX**	**XXX**	**XXX**
Certificates					
Material confirmation with inspection certificate 3.1 to EN 10204	C2				
Material confirmation NACE MR 01-75 with acceptance test certificate 3.1 to EN 10204	CN				
Certificate of compliance 2.1 to EN 10204 for order conformity	C4				
Acceptance test certificate 3.1 to EN 10204 for visual, dimensional, and functional checks	C6				
Acceptance test certificate 3.1 to EN 10204 for Positive Material Identification (PMI)	CA				
Pressure test acc. AD2000	CB				
Test package (compression test, non-destructive material test, welder test, welding procedure test)	CT				
Inspection certificate 3.1 in accordance with EN 10204 for non-destructive material testing of weld seams	C8				
Certificate of compliance 2.1 to EN 10204 with confirmation of accuracy	CM				
Inspection certificate 3.1 in accordance with EN 10204 from Positive Material Identification PMI (including melt analysis)	C5				
Others	CZ				
Ship register certificates					
DNVGL/DNVSE – marine approval		CL1			
Bureau Veritas		CL4			
Legal metrology					
Transport subject to verification according to MID (OIML Cl 0.5/0.3)			CT3		
Transport subject to verification according to MID (OIML Cl 0.5)			CT4		
Option card 1					
1 × digital input				DRN	
1 × passive digital output				DRG	
1 × analog output passive (4 to 20 mA)				DRA	
1 × active digital output				DRH	
24 V DC transmitter loop power supply				DRT	
MODBUS				DRM	
PROFIBUS DP				DRD	
2 port Std. Ethernet (various protocols)				DR6**	
Ethernet-APL for Profinet, Modbus TCP, web server				DR7***	
Option card 2					
1 × digital input					DSN
1 × passive digital output					DSG
1 × analog output passive (4 to 20 mA)					DSA**
1 × active digital output					DSH
Power over Ethernet / Modbus module (for single-compartment housing)					DS8**

* Only for CoriolisMaster FCB450

** Available with single-compartment housing only in ‘Not Ex’ or ‘Zone 2’ or ‘Div 2’ design.

*** Available with dual-compartment housing only.

Continued on next page

Additional ordering information					
CoriolisMaster FCB430 Coriolis mass flow meter	**XXX**	**XX**	**XX**	**XX**	**XXX**
CoriolisMaster FCB450 Coriolis mass flow meter	**XXX**	**XX**	**XX**	**XX**	**XXX**
Communication option activated					
Ethernet IP	GCE*				
Modbus TCP	GCM[2]				
Web server	GCW[2]				
PROFINET	CGP[2]				
Connection type Std. Ethernet					
Without		U0[1]			
1 x M12 plug for 1-port Std. Ethernet (4 signal wires)		UE[1]			
2 x M12 plugs for 2-port Std. Ethernet (4 signal wires)		UF[1]			
1 x M12 plug for 1-port Std. Ethernet (8 signal wires)		UG[1]			
1 x RJ45 plug with 5 m (15 ft) cable length, pre-assembled (4 signal wires)		U5[1]			
2 x RJ45 plugs with 5 m (15 ft) cable length, pre-assembled (4 signal wires)		UB[1]			
1 x RJ45 plug with 5 m (15 ft) cable length, pre-assembled (8 signal wires)		UC[1]			
1 x RJ45 plug with 10 m (30 ft) cable length, pre-assembled (4 signal wires)		U6[1]			
2 x RJ45 plugs with 10 m (30 ft) cable length, pre-assembled (4 signal wires)		DU[1]			
1 x RJ45 plug with 10 m (30 ft) cable length, pre-assembled (8 signal wires)		UH[1]			
1 x RJ45 plug with 15 m (49 ft) cable length, pre-assembled (4 signal wires)		U7[1]			
2 x RJ45 plugs with 15 m (49 ft) cable length, pre-assembled (4 signal wires)		UJ[1]			
1 x RJ45 plug with 15 m (49 ft) cable length, pre-assembled (8 signal wires)		UK[1]			
1 x RJ45 plug with 20 m (66 ft) cable length, pre-assembled (4 signal wires)		U8[1]			
2 x RJ45 plugs with 20 m (66 ft) cable length, pre-assembled (4 signal wires)		UN[1]			
1 x RJ45 plug with 20 m (66 ft) cable length, pre-assembled (8 signal wires)		UP[1]			
Integrated digital display (LCD)					
No display, with lid			L0		
With capacitive buttons / display (TTG) / glass lid			L2		
Functional safety					
SIL2 certificate				CS	
Language in the device display					
German					BM1
English					BM5
French					BM4
Spanish					BM3
Italian					BM2
Portuguese					BMA
Chinese					BM6

1 Only available with outputs code E2, E3, E4

2 Only available with outputs code E2, E3, E4, L1 and DR7

Continued on next page

… Flowmeter sensor

… Ordering information

Additional ordering information									
CoriolisMaster FCB430 Coriolis mass flow meter	**XX**	**XX**	**XXX**	**XXX**	**XXX**	**XX**	**XXX**	**XXX**	**XXX**
CoriolisMaster FCB450 Coriolis mass flow meter	**XX**	**XX**	**XXX**	**XXX**	**XXX**	**XX**	**XXX**	**XXX**	**XXX**
Documentation Language									
German	M1								
English	M5								
Western Europe / Scandinavia language package (languages: DE, EN, DA, ES, FR, IT, NL, PT, FI, SV)	MW								
Language package Eastern Europe (Languages: DE, EL, CS, ET, LV, LT, HU, PL, SK, SL, RO, BG)	ME								
Others	MZ								
Additional software functions									
Standard and DensiMass concentration measurement		N6[1]							
Standard + filling device		N5[1]							
VeriMass – CoriolisMaster verification software		N7							
Enhanced Coriolis Control (ECC)		N8							
Configuration type									
Parameters set to factory settings			NC1						
Parameters set to customer specification			NCC						
Burst pressure limits of the burst-proof sensor housing									
Maximum burst pressure 6 MPa / 60 bar / 870 psi including tower extension				PR5					
Maximum burst pressure 10 MPa / 100 bar / 1450 psi including tower extension				PR6					
Maximum burst pressure 15 MPa / 150 bar / 2175 psi including tower extension				PR7					
Signal cable length									
Without signal cable					SC0				
5 m (approx. 15 ft)					SC1				
10 m (approx. 30 ft)					SC2				
20 m (approx. 66 ft)					SC4				
25 m (approx. 82 ft)					SC5				
30 m (approx. 98 ft)					SC6				
40 m (approx. 131 ft)					SC8				
50 m (approx. 164 ft)					SCA				
100 m (approx. 328 ft)					SCE				
150 m (approx. 492 ft)					SCG				
200 m (approx. 656 ft)					SCJ				
Others					SCZ				
Name plate									
Stainless steel plate with TAG no.						T1			
Others						TZ			
Ambient temperature range									
−40 to 70 °C (−40 to 158 °F)							TA9		
Extended tower length									
Tower length extension – meter insulation capability								TE1	
Tower length extension – meter insulation capability, potted								TE2	
Tower length extension – Marine meter insulation capability								TE3	
Further explosion protection certifications and approvals									
INMETRO Brazil Ex Certification									EJ2

1 Only for CoriolisMaster FCB450

CoriolisMaster FCH430, FCH450

Main ordering information											
CoriolisMaster FCH430 Coriolis mass flow meter	**FCH430**	**XX**	**XX**	**XXXXX**	**XX**	XX	X	X	XX	XX	X
CoriolisMaster FCH450 Coriolis mass flow meter	**FCH450**	**XX**	**XX**	**XXXXX**	**XX**	XX	X	X	XX	XX	X
Explosion protection											
Without		Y0									
General purpose (FM3810, ANSI/UL61010-1)		G1									
ATEX / IECEx (Zone 2 / 22)		A2									
ATEX / IECEx (Zone 1 / 21)		A1									
cFMus version Class 1 Div. 2		F2									
cFMus version, Class 1, Div. 1 (Zone 1 / 21)		F1									
NEPSI (Zone 2 / 22)		S2									
NEPSI (Zone 1 / 21)		S1									
Design / terminal box material / cable glands											
Integral mount – see transmitter housing			Y0								
Remote mount / aluminum / 1 × M20 × 1.5			U1								
Remote mount / aluminum / 1 × NPT ½ in			U2								
Remote mount / stainless steel / 1 × M20 × 1.5			A1								
Remote mount / stainless steel / 1 × NPT ½ in			A2								
Nominal diameter / nominal connection diameter											
DN 25 (1 in) / DN 20 (¾ in)				025E1							
DN 25 (1 in) / DN 25 (1 in)				025R0							
DN 25 (1 in) / DN 40 (1½ in)				025R2							
DN 50 (2 in) / DN 40 (1½ in)				050E1							
DN 50 (2 in) / DN 50 (2 in)				050R0							
DN 50 (2 in) / DN 65 (2½ in)				050R1							
DN 80 (3 in) / DN 65 (2½ in)				080E1							
DN 80 (3 in) / DN 80 (3 in)				080R0							
DN 80 (3 in) / DN 100 (4 in)				080R1							
Process connection											
Tri-Clamp in acc. with DIN 32676					T1						
Tri-Clamp in acc. with ASME BPE					T3						
Cable gland in acc. with DIN 11851					F1						
Others					Z9						

Continued on next page

... Flowmeter sensor

... Ordering information

Main ordering information					
CoriolisMaster FCH430 Coriolis mass flow meter	**XX**	**X**	**XX**	XX	X
CoriolisMaster FCH450 Coriolis mass flow meter	**XX**	**X**	**XX**	XX	X
Material for wetted parts					
CrNi steel polished 316L (1.4404 / 1.4435)	C-Gas				
Flow rate calibration					
Flow ± 0.40 % of measured value, gas 1 % of measured value		A**			
Flow ± 0.25 % of measured value, gas 1 % of measured value		B**			
Flow ± 0.2 % of measured value, gas 1 % of measured value		E**			
Flow ± 0.15 % of measured value, gas 0.5 % of measured value		C***			
Flow ± 0.10 % of measured value, gas 0.5 % of measured value		D***			
Flow / return ± 0.40 % of measured value, gas 1 % of measured value		J**			
Flow / return ± 0.25 % of measured value, gas 1 % of measured value		K**			
Flow / return ± 0.20 % of measured value, gas 1 % of measured value		N**			
Flow / return ± 0.15 % of measured value, gas 0.5 % of measured value		L***			
Flow / return ± 0.10 % of measured value, gas 0.5 % of measured value		M***			
Others		Z			
Density calibration					
Density: 10 g/l			1*		
Density: 2 g/l			3**		
Density: 1 g/l			4**		
Density: 0.4 g/l			5**		
Others			9		

* If the wetted parts are made of Ni-Alloy, then parts of the transducer housing are also made of Ni-Alloy

** Only for CoriolisMaster FCH430

*** Only for CoriolisMaster FCH450

Continued on next page

Main ordering information			
CoriolisMaster FCH430 Coriolis mass flow meter	**XX**	**XX**	**X**
CoriolisMaster FCH450 Coriolis mass flow meter	**XX**	**XX**	**X**
Connection Design / Transmitter Housing Type / Transmitter Housing Material / Cable Glands			
Integral mount / dual-compartment housing / aluminum / 3 × M20 × 1.5	D1		
Integral mount / dual-compartment housing / aluminum / 3 × NPT ½ in	D2		
Remote / dual-compartment / aluminium / 3 × NPT ½ in (Exd, XP)	D5		
Remote mount / dual-compartment / aluminium / 3 × M20 x 1.5 (Exd, XP)	D6		
Integral mount / single-compartment housing / aluminum / 3 × M20 × 1.5	S1		
Integral mount / single-compartment housing / aluminum / 3 × NPT ½ in	S2		
Remote mount / not specified	Y0		
Others	Z9		
Outputs			
Current output 1 (active or passive), digital output 1 & 2 (passive), HART, PROFIBUS DP®		D1	
Current output 1 (active), digital output 1 & 2 (passive), HART, Modbus		M1	
Current output 1 (active / passive), digital output 1 & 2 (passive), digital output 3 (active), HART, Modbus		M6	
Current output 1 (active / passive), digital output 1 & 2 (passive), HART		G0	
Current output 1 (active / passive), digital output 1 & 2 (passive), HART 1 port Std. Ethernet		E2*	
Current output 1 (active / passive), digital output 1 & 2 (passive), HART 2 port Std. Ethernet		E3*	
Current output 1 (active / passive), digital output 1 & 2 (passive), HART, 1 port Std. Ethernet + POE		E4*	
Current output 1 (active / passive), digital output 1 & 2 (passive), 24 V DC transmitter loop power supply, HART		G1	
Current output 1 (active / passive), digital output 1 & 2 (passive), current output 2 (passive), HART		G2	
Current output 1 (active / passive), digital output 1 & 2 (passive), current output 2 (passive), current output 3 (passive), HART		G3	
Current output 1 (active / passive), digital output 1 & 2 (passive), current output 2 (passive), 24 V DC transmitter loop power supply, HART		G4	
Current output 1 (active / passive), digital output 1 & 2 (passive), HART Advanced Physical Layer (APL)		L1**	
Without		Y0	
Power supply			
100 to 230 V AC			A
11 to 30 V DC			C
Without			Y

* Available with single-compartment housing only in 'Not Ex' or 'Zone 2' or 'Div 2' design.

** Only available with dual-compartment housing, for Profibus, Modbus TCP, web server.

Continued on next page

… Flowmeter sensor

… Ordering information

Additional ordering information

Additional ordering information			
CoriolisMaster FCH430 Coriolis mass flow meter	**XX**	**XXX**	**XXX**
CoriolisMaster FCH450 Coriolis mass flow meter	**XX**	**XXX**	**XXX**
Certificates			
Material confirmation with inspection certificate 3.1 to EN 10204	C2		
Material confirmation NACE MR 01-75 with acceptance test certificate 3.1 to EN 10204	CN		
Certificate of compliance 2.1 to EN 10204 for order conformity	C4		
Acceptance test certificate 3.1 to EN 10204 for visual, dimensional, and functional checks	C6		
Acceptance test certificate 3.1 to EN 10204 for Positive Material Identification (PMI)	CA		
Pressure test acc. AD2000	CB		
Test package (compression test, non-destructive material test, welder test, welding procedure test)	CT		
Certificate of compliance 2.1 to EN 10204 with confirmation of accuracy	CM		
Inspection certificate 3.1 in accordance with EN 10204 from Positive Material Identification PMI (including melt analysis)	CR		
Others	CZ		
Option card 1			
1 × digital input		DRN	
1 × Digital output		DRG	
1 × analog output passive (4 to 20 mA)		DRA	
1 × active digital output		DRH	
24 V DC transmitter loop power supply		DRT	
MODBUS		DRM	
PROFIBUS DP		DRD	
2 port Std. Ethernet (various protocols)		DR6**	
Ethernet-APL		DR7***	
Option card 2			
1 × digital input			DSN
1 × Digital output			DSG
1 × analog output passive (4 to 20 mA)			DSA**
1 × active digital output			DSH
Power over Ethernet / Modbus module (for single-compartment housing)			DS8**

* Only for CoriolisMaster FCH450

** Only available with single-compartment housing, non-Ex or Zone 2, only Division 2

*** Only available with dual-compartment housing, for Profibus, Modbus TCP, web server

Continued on next page

Additional ordering information					
CoriolisMaster FCH430 Coriolis mass flow meter	**XXX**	**XX**	**XX**	**XX**	**XXX**
CoriolisMaster FCH450 Coriolis mass flow meter	**XXX**	**XX**	**XX**	**XX**	**XXX**
Communication option activated					
Ethernet IP	GCE*				
Modbus TCP	GCM**				
Web server	GCW**				
PROFINET	CGP**				
Connection type Std. Ethernet					
Without		U0*			
1 x M12 plug for 1-port Std. Ethernet (4 signal wires)		UE*			
2 x M12 plugs for 2-port Std. Ethernet (4 signal wires)		UF*			
1 x M12 plug for 1-port Std. Ethernet (8 signal wires)		UG*			
1 x RJ45 plug with 5 m (15 ft) cable length, pre-assembled (4 signal wires)		U5*			
2 x RJ45 plugs with 5 m (15 ft) cable length, pre-assembled (4 signal wires)		UB*			
1 x RJ45 plug with 5 m (15 ft) cable length, pre-assembled (8 signal wires)		UC*			
1 x RJ45 plug with 10 m (30 ft) cable length, pre-assembled (4 signal wires)		U6*			
2 x RJ45 plugs with 10 m (30 ft) cable length, pre-assembled (4 signal wires)		DU*			
1 x RJ45 plug with 10 m (30 ft) cable length, pre-assembled (8 signal wires)		UH*			
1 x RJ45 plug with 15 m (49 ft) cable length, pre-assembled (4 signal wires)		U7*			
2 x RJ45 plugs with 15 m (49 ft) cable length, pre-assembled (4 signal wires)		UJ*			
1 x RJ45 plug with 15 m (49 ft) cable length, pre-assembled (8 signal wires)		UK*			
1 x RJ45 plug with 20 m (66 ft) cable length, pre-assembled (4 signal wires)		U8*			
2 x RJ45 plugs with 20 m (66 ft) cable length, pre-assembled (4 signal wires)		UN*			
1 x RJ45 plug with 20 m (66 ft) cable length, pre-assembled (8 signal wires)		UP*			
Integrated digital display (LCD)					
No display, with lid			L0		
With capacitive buttons / display (TTG) / glass lid			L2		
Functional safety					
SIL2 certificate				CS	
Language in the device display					
German					BM1
English					BM5
French					BM4
Spanish					BM3
Italian					BM2
Portuguese					BMA
Chinese					BM6

* Only available with outputs code E2, E3, E4

** Only available with outputs code E2, E3, E4, L1, and DR7

Continued on next page

… Flowmeter sensor

… Ordering information

Additional ordering information								
CoriolisMaster FCH430 Coriolis mass flow meter	**XX**	**XX**	**XXX**	**XXX**	**XX**	**XXX**	**XXX**	**XXX**
CoriolisMaster FCH450 Coriolis mass flow meter	**XX**	**XX**	**XXX**	**XXX**	**XX**	**XXX**	**XXX**	**XXX**
Documentation Language								
German	M1							
English	M5							
Western Europe / Scandinavia language package (languages: DE, EN, DA, ES, FR, IT, NL, PT, FI, SV)	MW							
Language package Eastern Europe (languages: DE, EL, CS, ET, LV, LT, HU, PL, SK, SL, RO, BG)	ME							
Others	MZ							
Additional software functions								
Standard and DensiMass concentration measurement		N6*						
Standard + filling device		N5*						
VeriMass – CoriolisMaster verification software		N7						
Enhanced Coriolis Control (ECC)		N8						
Configuration type								
Parameters set to factory settings			NC1					
Parameters set to customer specification			NCC					
Signal cable length								
Without signal cable				SC0				
5 m (approx. 15 ft)				SC1				
10 m (approx. 30 ft)				SC2				
20 m (approx. 66 ft)				SC4				
25 m (approx. 82 ft)				SC5				
30 m (approx. 98 ft)				SC6				
40 m (approx. 131 ft)				SC8				
50 m (approx. 164 ft)				SCA				
100 m (approx. 328 ft)				SCE				
150 m (approx. 492 ft)				SCG				
200 m (approx. 656 ft)				SCJ				
Others				SCZ				
Name plate								
Stainless steel plate with TAG no.					T1			
Others					TZ			
Ambient temperature range								
−40 to 70 °C (−40 to 158 °F)						TA9		
Extended tower length								
Tower length extension – meter insulation capability							TE1	
Tower length extension – meter insulation capability, potted							TE2	
Further explosion protection certifications and approvals								
INMETRO Brazil Ex Certification								EJ2

* Only for CoriolisMaster FCH450

Transmitter

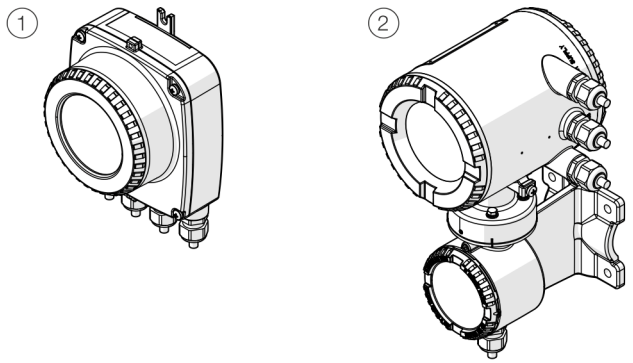

1 Single-compartment housing 2 Dual-compartment housing

Figure 21: Transmitter FCT4xx in field mount housing (remote mount design)

Features

- 4 to 20 mA current / HART 7.1 output.
- In the event of an alarm, current output can be adjusted to 21 to 22.6 mA (NAMUR NE43).
- Measuring range: can be adjusted between 0.001 to 2 x Q_{max}DN.
- Programmable digital output. Can be configured as a frequency, pulse or binary output.
- Two slots for optional plug-in cards for retrofitting additional current / digital outputs or a digital input.
- Parameterization via HART communication, Modbus, web server.
- Response time ≥ 1 s, as step function 0 to 99 % (corresponds to 5 τ)
- Damping: Can be adjusted 0.04 to 300 s (1 τ).
- Low flow cutoff: 0 to 5 % for current and pulse output.
- Measuring medium parameters can be changed at any time (pressure and temperature influence, density, units, etc.).
- Simulation of current and binary output (manual process execution).

LCD indicator (option)

- Indicator for all measured values of CoriolisMaster (for example mass flow, volume flow rate, density, temperature and many others).
- Application-specific visualizations which the user can select. Four operator pages can be configured to display multiple values in parallel.
- Plain text fault diagnostics
- Menu-guided parameterization with four buttons.
- Easy Set-up function for fast commissioning.
- Operation through the front glass via capacitive buttons.

Diagnostic functions (option)

- VeriMass erosion monitor
- Monitoring function for current output 31 / 32 (analysis and read back of the output value).

For detailed information on optional diagnostic functions, consult the associated operating instruction OI/FCB400/FCH400.

... Transmitter

... Features

Optional plug-in cards

The transmitter has two slots (OC1, OC2) into which plug-in cards can be inserted to provide additional inputs and outputs. The slots are located on the transmitter motherboard and can be accessed after removing the front housing cover.

Plug-in cards

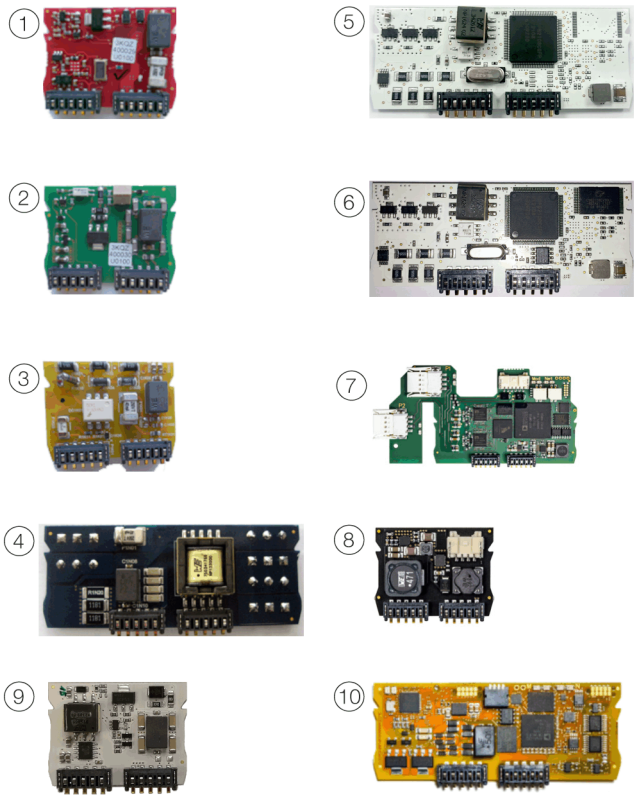

Pos.	Description	Quantity*
1	Current output, 4 to 20 mA passive (red) Order number: 3KQZ400035U0100	2
2	Passive digital output (green) Order number: 3KQZ400030U0100	1**
3	Passive digital input (yellow) Order number: 3KQZ400032U0100	2
4	Loop power supply 24 V DC (blue) Order number: 3KQZ400031U0100	1
5	Modbus RTU RS485 (white) Order number: 3KQZ400028U0100	1
6	Profibus DP (white) Order number: 3KQZ400027U0100	1
7	Standard Ethernet (various protocols) (green) Order No.: 3KQZ400037U0100	1
8	Power-over-Ethernet (POE) for Std. Ethernet (blue) Order No.: 3KQZ400039U0100	1
9	Active digital output (white) Order No.: 3KQZ400056U0100	1**
10	Ethernet-APL™ (yellow) Order No.: 3KQZ400067U0100	1

* The 'Number' column indicates the maximum number of plug-in cards of the same type that can be used.

** Only one plug-in card of the active digital output type or passive digital output type can be inserted in Pos. 2.

Note

For an overview of the possible plug-in card combinations, refer to **Possible plug-in card combinations** on page 78.

IP rating

In accordance with EN 60529: IP 65 / IP 67, NEMA 4X

Vibration

In accordance with EN 60068-2-6

- In the 10 to 58 Hz range, maximum deflection* 0.15 mm (0.006 in.)
- In the range from 58 to 150 Hz, maximum acceleration 1 g*

* Isolated peak load: 2 g

Approved relative humidity

In accordance with EN 60068-2-30

Temperature data

	Standard	Optional
Ambient temperature	−20 to 70 °C (−4 to 158 °F)	−40 to 70 °C (−40 to 158 °F)
Storage temperature	−20 to 70 °C (−4 to 158 °F)	—

Note
When operating below -20 °C (-4 °F), the LCD display can no longer be read and the electronics should be operated with as few vibrations as possible.
Full functionality is assured at temperatures above -20 °C (-4 °F).
Storage temperature of the devices in the 'Standard' version without cable glands is also −40 to 70 °C (−40 to 158°F).

Housing design

Integral mount design	
Housing	Cast aluminum, painted
Paint	≥ 80 µm thick, RAL 9002 (gray white)
Cable gland	Polyamide, M20 x 1.5 or ½ in. NPT
	Stainless steel*, M20 x 1.5 or ½ in. NPT
Remote mount design	
Housing	Cast aluminum, painted
Paint	≥ 80 µm thick, mid-section RAL 7012 (basalt gray), front cover / rear cover RAL 9002 (gray white)
Cable gland	Polyamide, M20 x 1.5 or ½ in. NPT
	Stainless steel*, M20 x 1.5 or ½ in. NPT
Weight	4.5 kg (9.92 lb)

* in the case of explosion-proof design for −40 °C (−40 °F) ambient temperature)

Signal cables

The signal cable used for the connection of the transmitter and sensor must fulfill at least the following technical specifications.

Cable specification	
Impedance	100 to 120 Ω
Withstand voltage	120 V
Outer diameter	6 to 12 mm (0.24 to 0.47 in)
Cable design	Two wire pairs as a star-quad cable
Conductor cross-section	Length-dependent
Shield	Copper braid with approximately 85 % coverage
Temperature range	Application-dependent, for use in potentially explosive atmospheres, observe the information in **Temperature resistance for the connecting cable** on page 93!

Maximum signal cable length	
0.25 mm^2 (AWG 24)	50 m (164 ft)
0.34 mm^2 (AWG 22)	100 m (328 ft)
0.5 mm^2 (AWG 20)	150 m (492 ft)
0.75 mm^2 (AWG 19)	200 m (656 ft)

Recommended cables
It is recommended to use an ABB signal cable for standard applications. The ABB signal cable fulfills the above-mentioned cable specification and can be utilized unrestrictedly up to an ambient temperature of $T_{amb.}$ = 80 °C (176 °F).

ABB signal cable	Ordering number
5 m (16 ft)	3KQZ407123U0500
10 m (33 ft)	3KQZ407123U1000
20 m (65 ft)	3KQZ407123U2000
50 m (164 ft)	3KQZ407123U5000
100 m (328 ft)	3KQZ407123U1H00
150 m (492 ft)	3KQZ407123U1F00
200 m (656 ft)	3KQZ407123U2H00

For marine applications, an appropriate certified signal cable must be used.
ABB recommends the cable HELKAMA RFE-FRHF 2×2×0,75 QUAD 250V (HELKAMA order number 20522).

... Transmitter

Electrical connections

Electrical connection (HART protocol)

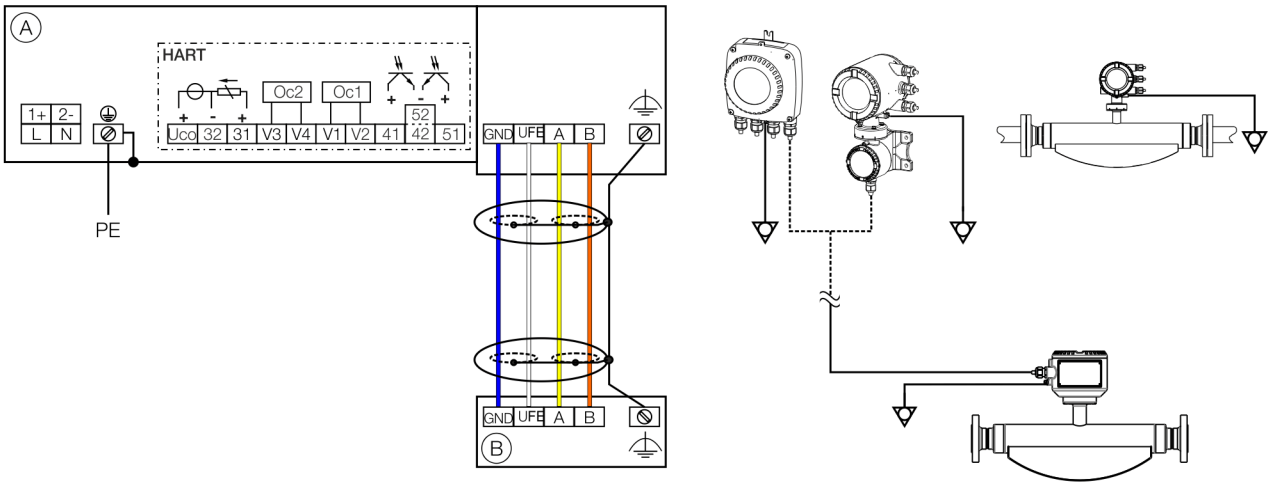

Ⓐ Transmitter

Ⓑ Sensor

Figure 22: Electrical connection

Connections for the power supply

AC voltage	
Terminal	**Function/comments**
L	Phase
N	Neutral conductor
PE / ⏚	Protective earth (PE)
⏚	Functional earth

DC voltage	
Terminal	**Function/comments**
1+	+
2-	-
PE / ⏚	Protective earth (PE)
⏚	Functional earth

Connecting the signal cable

Only for remote mount design.

The sensor housing and transmitter housing must be connected to potential equalization.

Terminal	**Function / comments**
U_{FE}	Sensor power supply
GND	Ground
A	Data line
B	Data line
⏚	Functional earth / Shielding

Connections for inputs and outputs

Terminal	**Function / comments**
Uco / 32	**Current output 4 to 20 mA- / HART® output, active**
	or
31 / 32	**Current output 4 to 20 mA- / HART® output, passive**
41 / 42	**Passive digital output DO1**
51 / 52	**Passive digital output DO2**
V1 / V2	**Plug-in card, slot OC1**
V3 / V4	**Plug-in card, slot OC2**
	For details, see **Optional plug-in cards** on page 66.

Electrical data for inputs and outputs

Note

When using the device in potentially explosive atmospheres, note the additional connection data in **Use in potentially explosive atmospheres** on page 88!

Power supply L / N, 1+ / 2–

AC voltage	
Terminals	L / N
Operating voltage	100 to 240 V AC, –15 % / +10 %, 50 / 60 Hz
Power consumption	< 20 VA

DC voltage	
Terminals	1+ / 2–
Operating voltage	11 to 30 V DC
Power consumption	< 20 W

Requirements for inputs and outputs

For reasons of electromagnetic compatibility (EMC), shielded cables should be used in certain output configurations; this is presented in the table below.
The cable shielding must be inserted in the device, see operating instruction / commissioning instruction.

Use of shielded cables

Transmitter	**Plug-in card used**	**Terminal**				
		Uco/31/32	**41/42**	**51/52**	**V1/V2**	**V3/V4**
Dual-compartment housing	Active digital output V1/V2	—	—	—	X	—
	Active digital output V3/V4	—	—	—	—	X
	Modbus V1/V2	—	—	—	X	—
	Profibus DP V1/V2	—	—	—	X	—
	Ethernet-APL™	X	X	X	X	X
Single-compartment housing	Active digital output V1/V2	X	X	X	—	X
	Active digital output V3/V4	X	X	X	X	—
	Modbus V1/V2*	—	—	—	X	—
	Profibus DP V1/V2*	—	—	—	X	—
	Std. Ethernet V1/V2	X	X	X	X	X
	Std. Ethernet V1/V2	X	X	X	X	X

X Use shielded cables

* Use in remote mount design only

Current output 32 / Uco, 31 / 32 (basic device)

Can be configured for outputting mass flow, volume flow, density and temperature via on-site software.

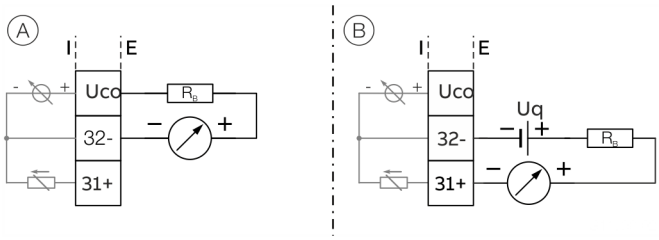

(A) Current output 31 / Uco, active (B) Current output 31 / 32, passive

Figure 23: (I = internal, E = external, R_B = load)

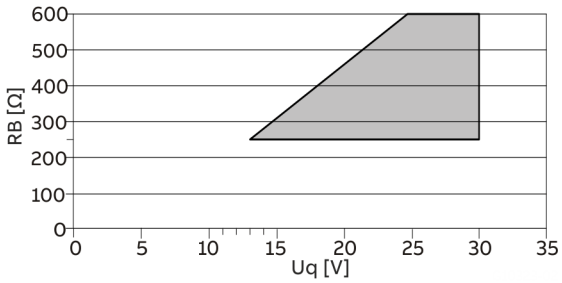

Permissible source voltage U_q for passive outputs in relation to load resistance R_B where I_{max} = 22 mA. = Permissible range

Figure 24: Source voltage for passive outputs

Current output	**Active**	**Passive**
Terminals	Uco / 32	31 / 32
Output signal	4 to 20 mA or 4 to 12 to 20 mA switchable	
Load R_B	250 Ω ≤ R_B ≤ 300 Ω	250 Ω ≤ R_B ≤ 600 Ω
Source voltage U_q*	–	13 V ≤ U_q ≤ 30 V
Measuring error	< 0.1 % of measured value	
Resolution	0.4 µA per digit	

* The source voltage U_q is dependent of the load R_B and must be placed in an additional area.

For information on communication via the HART protocol, refer to **HART® Communication** on page 82.

... Transmitter

... Electrical connections

Current output Uco / 32 as loop power supply for digital output 41 / 42 or 51 / 52

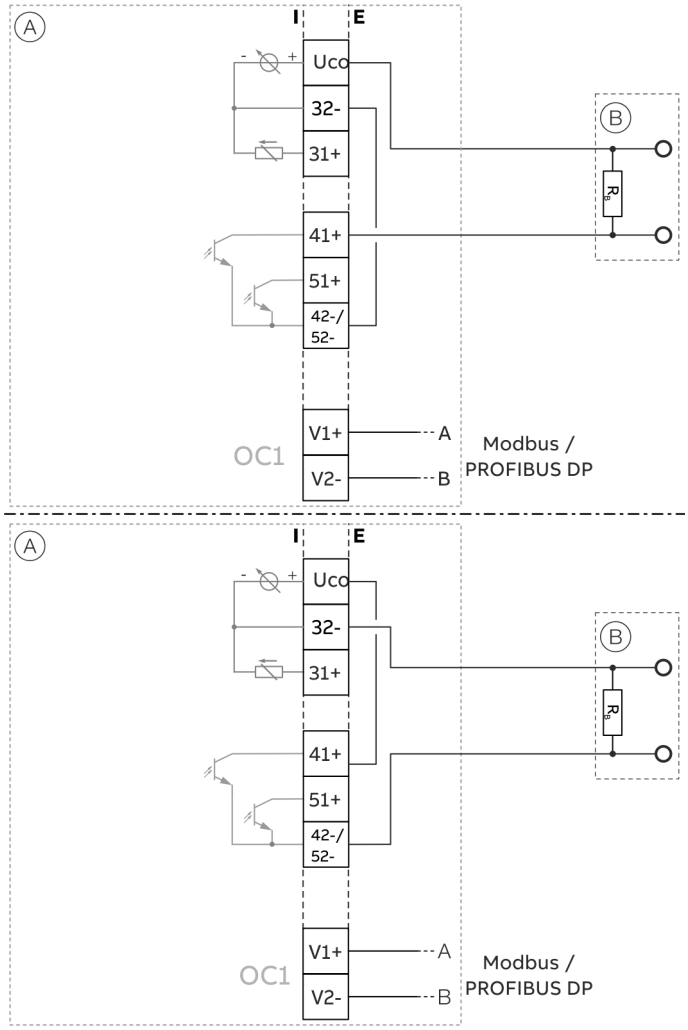

A Transmitter FCx400

B Customer wiring

OC1 Modbus / PROFIBUS DP plug-in card

R_B Load resistance

Figure 25: Current output Uco / 32 in power mode

In the case of digital communication via Modbus / PROFIBUS DP, the current output Uco / 32 can be switched to the 'Power Mode' operating mode through the software.
The current output 31/32/Uco is set permanently to 22.6 mA and no longer follows the selected process variable. HART communication is deactivated.
As a result, the passive digital outputs 41 / 42 or 51 / 52 can also be operated as active digital outputs.

The load resistance R_B needs to be integrated by the customer outside of the transmitter housing.

Loop power supply 24 V DC pperating mode	
Terminals	Uco / 32
Function	For active connection of passive outputs
Output Voltage	Load dependent, see Figure 26.
Load rating I_{max}	22.6 mA, permanently short circuit-proof

Table 1: Specification current output Uco / 32 in power mode

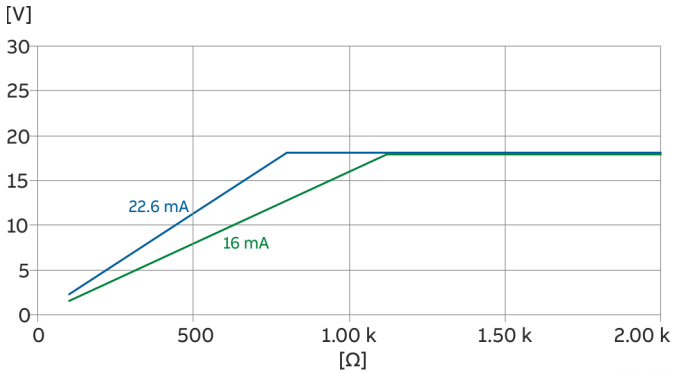

Figure 26: Output voltage dependent on load resistance

Digital output 41 / 42, 51 / 52 (basic device)

Can be configured as pulse, frequency or binary output via on-site software.

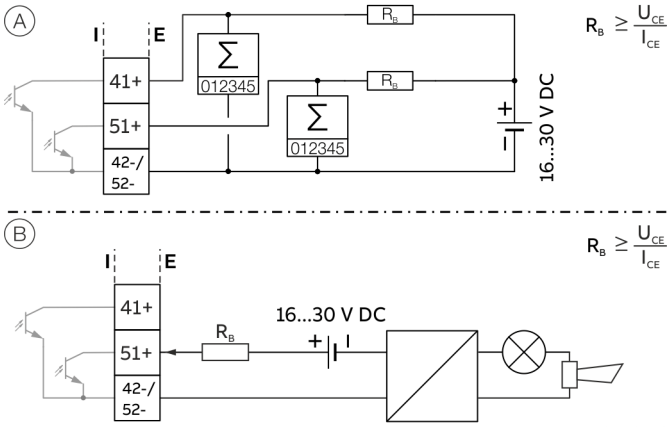

(A) Digital output 41 / 42, 51 / 52 passive as a pulse or frequency output

(B) Passive digital output 51 / 52 as binary output

Figure 27: (I = internal, E = external, R_B = load)

Pulse / frequency output (passive)	
Terminals	41 / 42, 51 / 52
Output 'closed'	0 V ≤ U_{CEL} ≤ 3 V For f < 2.5 kHz: 2 mA < I_{CEL} < 30 mA For f > 2.5 kHz: 10 mA < I_{CEL} < 30 mA
Output 'open'	16 V ≤ U_{CEH} ≤ 30 V DC 0 mA ≤ I_{CEH} ≤ 0.2 mA
f_{max}	10.5 kHz
Pulse width	0.05 to 2000 ms

Binary output (passive)	
Terminals	41 / 42, 51 / 52
Output 'closed'	0 V ≤ U_{CEL} ≤ 3 V 2 mA ≤ I_{CEL} ≤ 30 mA
Output 'open'	16 V ≤ U_{CEH} ≤ 3 V DC 0 mA ≤ I_{CEH} ≤ 0.2 mA
Switching function	Can be configured using software.

Note

- Terminals 42 / 52 have the same potential. Digital outputs DO 41 / 42 and DO 51 / 52 are not electrically isolated from each other. If an additional electrically isolated digital output is required, a corresponding plug-in module must be used.
- If you are using a mechanical counter, we recommend setting a pulse width of ≥ 30 ms and a maximum frequency of f_{max} ≤ 30 Hz.

Modbus® / PROFIBUS DP® interface V1 / V2 (plug-in card)

A Modbus or PROFIBUS DP interface can be implemented by using the 'Modbus RTU, RS485 (white)' or 'PROFIBUS DP, RS485 (white)' plug-in cards.

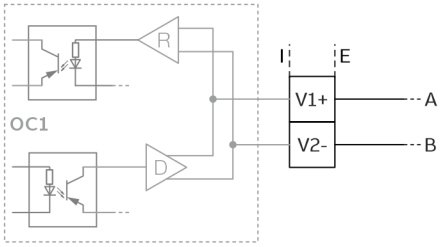

Figure 28: Plug-in card as a Modbus / PROFIBUS DP interface (I = internal, E = external)

The corresponding plug-in card can only be used in slot OC1.

For information on communication through the Modbus or PROFIBUS DP protocols, refer to chapters **Modbus RTU® communication** on page 82 and **PROFIBUS DP® communication** on page 83.

... Transmitter

... Electrical connections

Current output V1 / V2, V3 / V4 (plug-in module)

Up to two additional plug-in modules can be implemented via the 'Passive current output (red)' option module.
Can be configured for outputting mass flow, volume flow, density and temperature via on-site software.

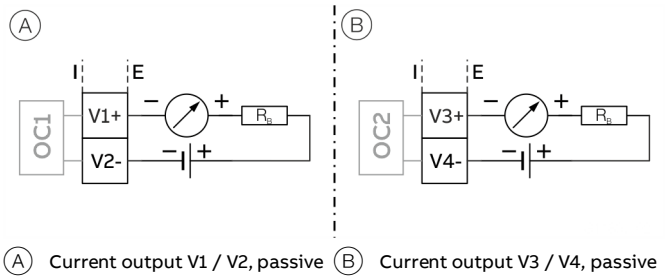

Figure 29: (I = internal, E = external, R_B = load)

The plug-in module can be used in slot OC1 **and** OC2.

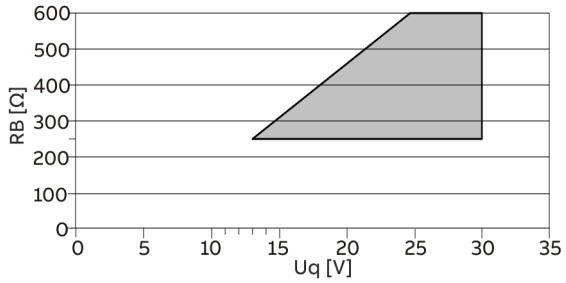

Permissible source voltage U_q for passive outputs in relation to load resistance R_B where Imax = 22 mA. = Permissible range

Figure 30: Source voltage for passive outputs

Passive current output	
Terminals	V1 / V2, V3 / V4
Output signal	4 to 20 mA
Load R_B	250 Ω ≤ R_B ≤ 600 Ω
Source voltage U_q*	13 V ≤ U_q ≤ 30 V
Measuring error	< 0.1 % of measured value
Resolution	0.4 µA per digit

* The source voltage U_q is dependent of the load R_B and must be placed in an additional area.

Passive digital output V1 / V2, V3 / V4 (plug-in card)

An additional binary output can be implemented via the 'Passive digital output (green)' plug-in module.
Can be configured as an output for flow direction signaling, alarm output etc. via on-site software.

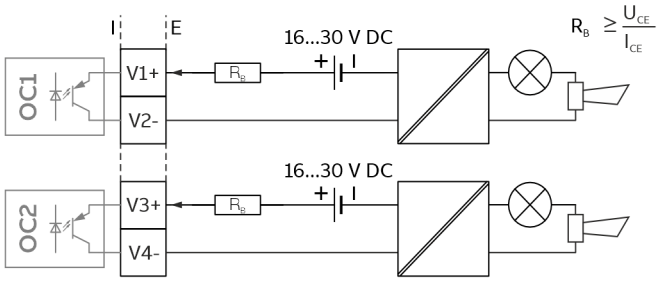

Figure 31: Plug-in card as binary output (I = internal, E = external, R_B = load)

The plug-in module can be used in slot OC1 **or** OC2.

Binary output (passive)	
Terminals	V1 / V2, V3 / V4
Output 'closed'	0 V ≤ U_{CEL} ≤ 3 V 2 mA < I_{CEL} < 30 mA
Output 'open'	16 V ≤ U_{CEH} ≤ 30 V DC 0 mA ≤ I_{CEH} ≤ 0.2 mA
Switching function	Can be configured using software.

Active digital output V1 / V2, V3 / V4 (plug-in card)
An additional binary output can be implemented via the 'Active digital output (white)' plug-in card.
Can be configured on-site as a logical output for V1 / V2 (flow direction signaling, alarm output, etc.) via software.
Can be configured on-site for V3 / V4 as a frequency output, pulse output or logical output via software.

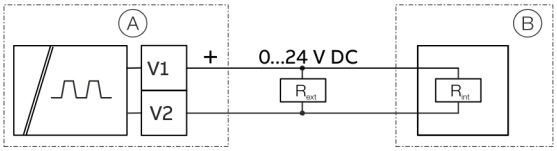

Ⓐ Transmitter Ⓑ Distributed control system, etc.

Figure 32: Plug-in card V1 / V2

or

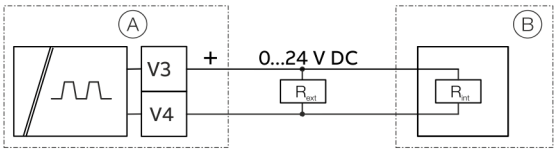

Ⓐ Transmitter Ⓑ Distributed control system, etc.

Figure 33: Plug-in card V3 / V4

The plug-in module can be used in slot OC1 **or** OC2.
External voltage cannot be connected to the active binary output.
Only one of the two digital output plug-in cards (passive or active) will be supported at the same time.

Note
Requirements for inputs and outputs
For reasons of electromagnetic compatibility (EMC), shielded cables should be used in certain output configurations; this is presented in Table **Use of shielded cables** on page 69.

Dependency of the output voltage U from the load R_B.
Load R_B is the parallel connection of the internal resistance R_{int} and optional external resistance R_{ext}.

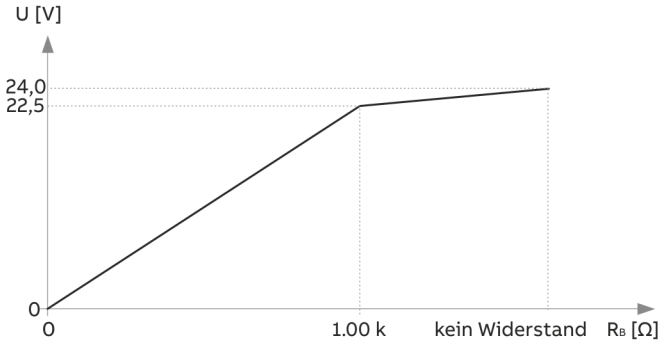

Figure 34: Dependency of the output voltage U from the load R_B.

Permissible ambient temperature single-compartment housing: 70 °C
Permissible ambient temperature dual-compartment housing dependent on the load R_B:

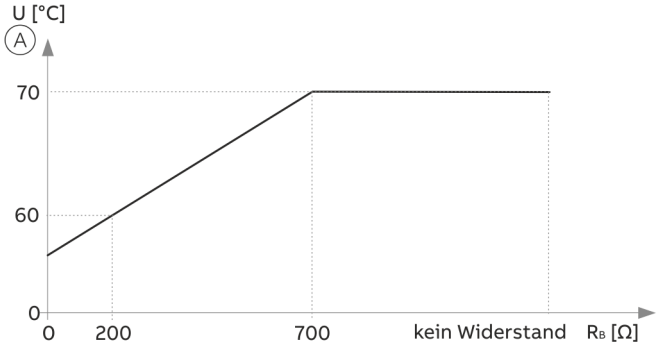

Ⓐ Ambient temperature (°C)

Figure 35: Permissible ambient temperature dual-compartment housing

Binary output (active)	
Terminals	V1 / V2, V3 / V4
'Off' output	$U_L \leq 200$ mV
	$I_L < 0$ mA
'On' output	$0 \text{ V} \leq U_H \leq 24$ V (dependent on R_B)
	$0 \text{ mA} \leq I_H \leq 22.5$ mA (dependent on R_B)

For pulse/frequency output	
Terminals	V3 / V4
'Off' output	$U_L \leq 200$ mV
	$I_L < 0$ mA
'On' output	$0 \text{ V} \leq U_H \leq 24$ V (dependent on R_B)
	$0 \text{ mA} \leq I_H \leq 22.5$ mA (dependent on R_B)
f_{max}	10.5 kHz
Pulse width	0.05 to 2000 ms

... Transmitter

... Electrical connections

Digital input V1 / V2, V3 / V4 (plug-in module)

A digital input can be implemented via the 'Passive digital input (yellow)' plug-in module.
Can be configured as an input for external counter reset, external output deactivation etc. via on-site software.

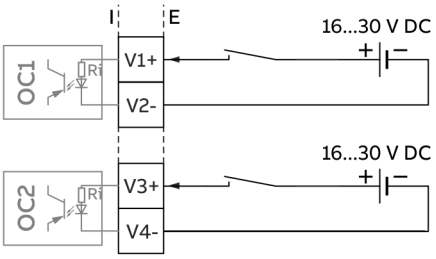

Figure 36: Plug-in card as digital input (I = internal, E = external)

The plug-in module can be used in slot OC1 **or** OC2.

Digital input	
Terminals	V1 / V2, V3 / V4
Input 'On'	16 V ≤ U_{KL} ≤ 30 V
Input 'Off'	0 V ≤ U_{KL} ≤ 3 V
Internal resistance R_i	6.5 kΩ
Function	Can be configured using software.

24 V DC loop power supply (plug-in card)

Use of the 'loop power supply (blue)' plug-in card allows a passive output on the transmitter to be used as an active output. See also **Connection examples** on page 74.

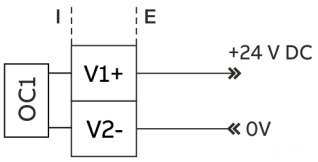

Figure 37: (I = Internal, E = External)

The plug-in card can only be used in slot OC1.

Loop power supply 24 V DC	
Terminals	V1 / V2
Function	For active connection of passive outputs
Output Voltage	24 V DC at 0 mA,
	17 V DC at 25 mA
Load rating I_{max}	25 mA, permanently short circuit-proof

Connection examples

Input and output functions are configured via the device software in accordance with the desired application.

Digital output 41 / 42, 51 / 52, V3 / V4 active

When the 'loop power supply 24 V DC (blue)' plug-in card is used, the digital outputs on the basic device and on the option modules can also be wired as active digital outputs.

Note

Each 'loop power supply (blue)' plug-in card must only power one output.
It must not be connected to two outputs (for example digital output 41 / 42 and 51 / 52)!

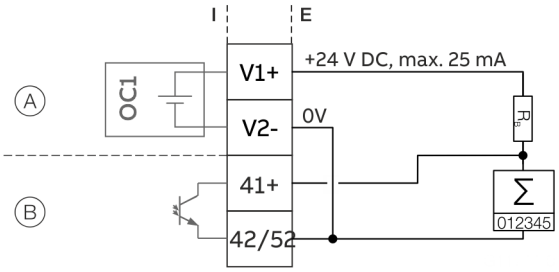

(A) 'Loop power supply (blue)' plug-in card in slot 1
(B) Digital output, digital output 41 / 42

Figure 38: Active digital output 41 / 42 (example)

The connection example shows usage for digital output 41 / 42; the same applies to usage for digital output 51 / 52.

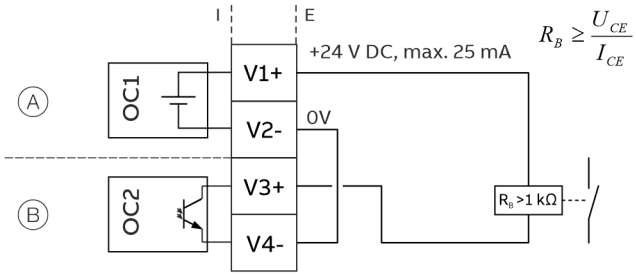

(A) 'Loop power supply (blue)' plug-in card in slot 1
(B) 'Digital output (green)' plug-in card in slot 2

Figure 39: Active digital output V3 / V4 (example)

... Transmitter

... Electrical connections

Digital output 41 / 42, 51 / 52 passive on distributed control system

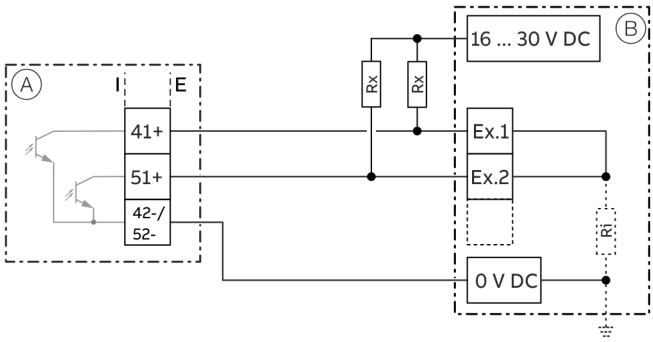

(A) Transmitter

(B) Distributed control system / Memory programmable controller

Ex. 1 Input 1

Ex. 2 Input 2

R_X Resistor for current limitation

R_I Distributed control system internal resistance

Figure 40: Digital output 41 / 42 on distributed control system (example)

The R_X resistors limit the maximum current through the optoelectronic coupler of the digital outputs in the transmitter.
The maximum permissible current is 25 mA. An R_X value of 1000 Ω / 1 W is recommended at a voltage level of 24 V DC.
The input on the distributed control system is reduced from 24 V DC to 0 V DC (falling edge) with '1' at the digital output.

Current output V3 / V4 active

When the 'loop power supply 24 V DC, blue' plug-in card is used, the current output on the plug-in card can also be wired as the active current output.

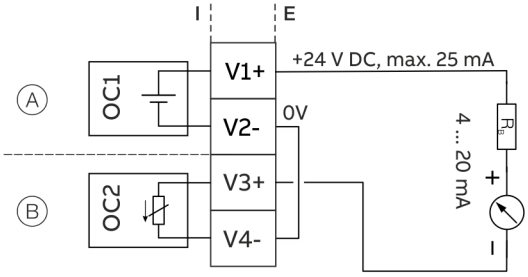

(A) 'Loop power supply (blue)' plug-in card in slot 1

(B) 'Passive current output (red)' plug-in card in slot 2

Figure 41: Active current output V3 / V4 (example)

Digital input V3 / V4 active

When the 'loop power supply 24 V DC, blue' plug-in card is used, the current output on the plug-in card can also be wired as the active current output.

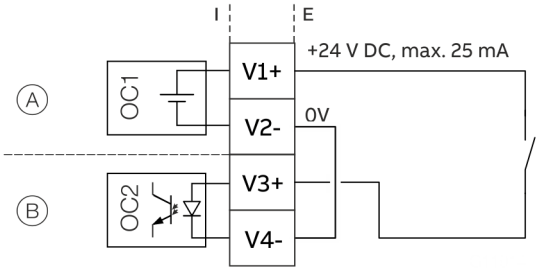

(A) 'Loop power supply (blue)' plug-in card in slot 1

(B) 'Passive digital input (yellow)' plug-in card in slot 2

Figure 42: Active digital output V3 / V4 (example)

... Transmitter

... Electrical connections

Connection versions digital output 41 / 42, 51 / 52
Depending on the wiring of digital outputs DO 41 / 42 and 51 / 52, they can be used parallel or only individually. The electrical isolation between the digital outputs also depends on the wiring.

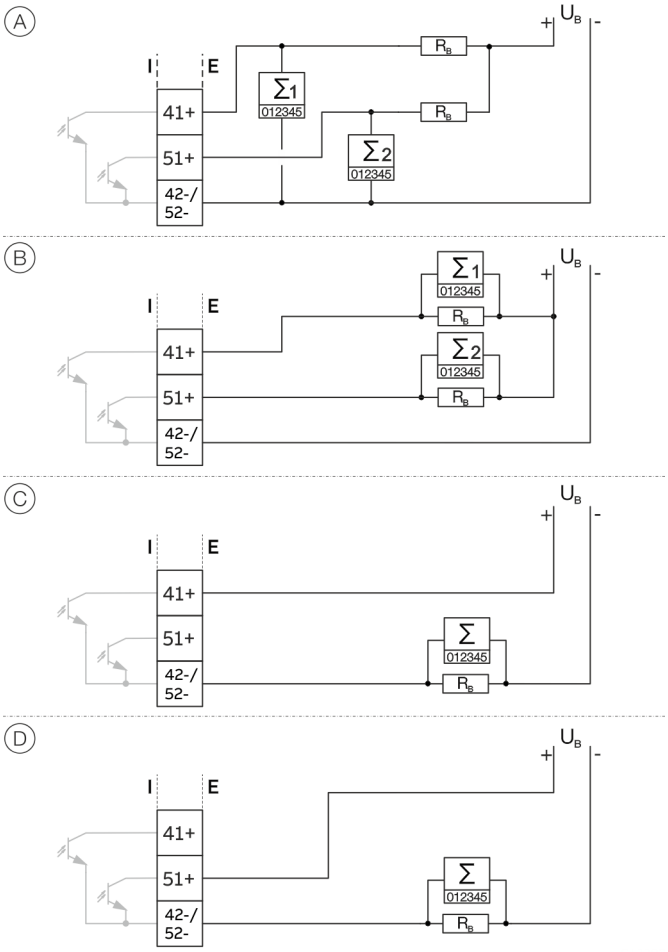

Figure 43: Connection versions digital output 41 / 42 and 51 / 52

	DO 41 / 42 and 51 / 52 can be used parallel	DO 41 / 42 and 51 / 52 electrically isolated
A	Yes	No
B	Yes	No
C	No, only DO 41 / 42 can be used	No
D	No, only DO 51 / 52 can be used	No

Dimensions

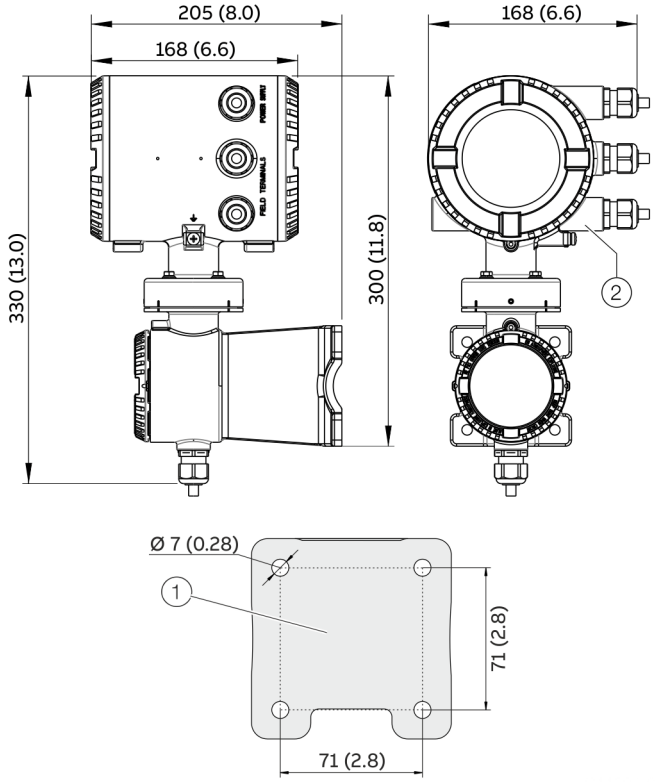

1 Hole pattern for mounting holes

2 Female thread (either ½ in NPT or M20 × 1.5), see model coding. In the case of a ½ in NPT, there is a plug instead of a cable gland.

Figure 44: Mounting dimensions dual-compartment housing

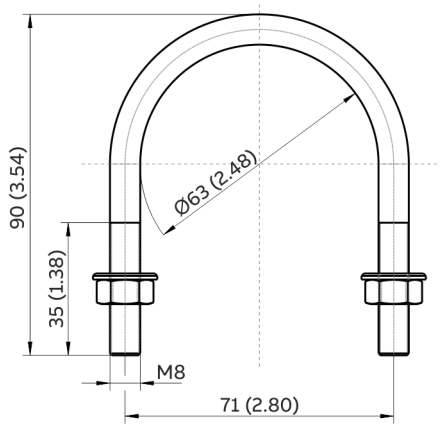

Figure 45: Assembly set for 2 in pipe mounting

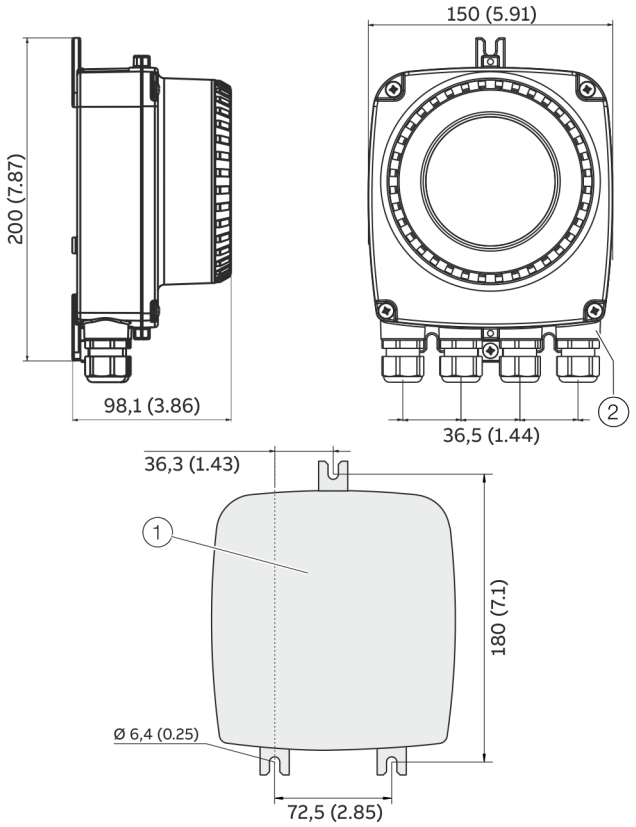

(1) Hole pattern for mounting holes

(2) Female thread (either ½ in NPT or M20 × 1.5), see model coding. In the case of a ½ in NPT, there is a plug instead of a cable gland.

Figure 46: Mounting dimensions single-compartment housing

... Transmitter

Ordering information

Possible plug-in card combinations

The following table provides an overview of the possible plug-in card combinations that can be selected when ordering the device.

Because of the wide variety of options, not all combinations can be presented. The possible combinations are shown in our online ABB Product Selection Assistant (PSA) for flow at www.abb.com/flow-selector.

Main ordering information (outputs)	Additional ordering information		Slot OC1	Slot OC2
	Additional output 1	Additional output 2	Terminals V1 / V2	Terminals V3 / V4
G0	–	–	–	–
G1	–	–	Loop power supply 24 V DC (blue)	–
G2	–	–	–	Current output, 4 to 20 mA passive (red)
G3	–	–	Current output, 4 to 20 mA passive (red)	Current output, 4 to 20 mA passive (red)
G4	–	–	Loop power supply 24 V DC (blue)	Passive current output (red)
D1	–	–	Profibus DP, RS485 (white)	
M1	–	–	Modbus RTU RS485 (white)	
M6	–	–	Modbus RTU RS485 (white)	Active digital output (white)
E2	–	–	Std. Ethernet (green)	
E3	–	–	Std. Ethernet (green)	
E4	–	–	Std. Ethernet (green)	Power over Ethernet (green)
L1	–	–	Ethernet-APL (yellow)	–
G0	DRT	–	Loop power supply 24 V DC (blue)	–
G0	DRT	DSN	Loop power supply 24 V DC (blue)	Passive digital input (yellow)
G0	DRT	DSG	Loop power supply 24 V DC (blue)	Passive digital output (green)
G0	DRT	DSA	Loop power supply 24 V DC (blue)	Current output, 4 to 20 mA passive (red)
G0	DRN	–	Passive digital input (yellow)	–
G0	DRN	DSG	Passive digital input (yellow)	Passive digital output (green)
G0	DRN	DSA	Passive digital input (yellow)	Current output, 4 to 20 mA passive (red)
G0	DRG	DSN	Passive digital output (green)	Passive digital input (yellow)
G0	DRG	DSA	Passive digital output (green)	Current output, 4 to 20 mA passive (red)
G0	DRA	DSA	Current output, 4 to 20 mA passive (red)	Current output, 4 to 20 mA passive (red)
G0	DRN	DSH	Passive digital input (yellow)	Active digital output (white)
G0	DRA	DSG	Current output, 4 to 20 mA passive (red)	Passive digital output (green)
G0	DRA	DSN	Current output, 4 to 20 mA passive (red)	Passive digital input (yellow)
G0	DRM	–	Modbus RTU RS485 (white)	–
G0	DRA	DSH	Current output, 4 to 20 mA passive (red)	Active digital output (white)
G0	DRD	–	Profibus DP, RS485 (white)	–
G0	DRM	DSN	Modbus RTU RS485 (white)	Passive digital input (yellow)
G0	DRM	DSG	Modbus RTU RS485 (white)	Passive digital output (green)
G0	DRD	DSN	Profibus DP, RS485 (white)	Passive digital input (yellow)
G0	DRA	DSH	Modbus RTU RS485 (white)	Active digital output (white)
G0	DRD	DSG	Profibus DP, RS485 (white)	Passive digital output (green)
G0	DR6	–	Std. Ethernet (green)	–
G0	DR6	DS8	Std. Ethernet (green)	Power over Ethernet (green)
G0	DR6	DSN	Std. Ethernet (green)	Passive digital input (yellow)
G0	DR6	DSG	Std. Ethernet (green)	Passive digital output (green)
G0	DR7	–	Ethernet-APL (yellow)	–
G0	DR7	DSN	Ethernet-APL (yellow)	Passive digital input (yellow)
G0	DR7	DSG	Ethernet-APL (yellow)	Passive digital output (green)
G0	DR7	DSH	Ethernet-APL (yellow)	Active digital output (white)

Note
For additional information on dependencies and restrictions, and for help on product selection, please refer to the Online Product Selection Assistant (PSA) at www.abb.us/flow-selector.

CoriolisMaster FCT430, FCT450 Coriolis mass flow transmitter

Main ordering information					
CoriolisMaster FCT430 Coriolis mass flow transmitter	**FCT430**	**XX**	**XX**	**XX**	**X**
CoriolisMaster FCT450 Coriolis mass flow transmitter	**FCT450**	**XX**	**XX**	**XX**	**X**
Explosion protection					
Without		Y0			
General purpose (FM3810, ANSI/UL61010-1)		G1			
ATEX / IECEx (Zone 2 / 22)		A2			
ATEX / IECEx (Zone 1 / 21)		A1			
cFMus version Class 1 Div. 2		F2			
cFMus version, Class 1, Div. 1 (Zone 1 / 21)		F1			
NEPSI (Zone 2 / 22)		S2			
NEPSI (Zone 1 / 21)		S1			
Connection Design / Transmitter Housing Type / Transmitter Housing Material / Cable Glands					
Separate / dual-compartment housing, wall mount / aluminum / 4 × M20 × 1.5			R1		
Remote / dual-compartment, wall mount / aluminium / 4 × NPT ½ in			R2		
Separate / dual-compartment housing, wall mount / aluminum / 4 × M20 × 1.5 (Ex d, XP)			R5		
Remote mount / dual-compartment housing, wall mount / aluminum / 4 × NPT ½ in (Ex d / XP)			R6		
Remote mount / single-compartment housing, wall mount / aluminum / 4 × M20 × 1.5			W1		
Remote mount / dual-compartment housing / aluminum / 4 × NPT ½ in			W2		
Others			Z9		
Outputs					
Current output 1 (active or passive), digital output 1 & 2 (passive), HART, PROFIBUS DP®				D1	
Current output 1 (active), digital output 1 & 2 (passive), HART, Modbus				M1	
Current output 1 (active / passive), digital output 1 & 2 (passive), digital output 3 (active), HART, Modbus				M6	
Current output 1 (active / passive), digital output 1 & 2 (passive), HART				G0	
Current output 1 (active / passive), digital output 1 & 2 (passive), HART 1 port Std. Ethernet				E2*	
Current output 1 (active / passive), digital output 1 & 2 (passive), HART 2 port Std. Ethernet				E3*	
Current output 1 (active / passive), digital output 1 & 2 (passive), HART, 1 port Std. Ethernet + POE				E4*	
Current output 1 (active / passive), digital output 1 & 2 (passive), 24 V DC transmitter loop power supply, HART				G1	
Current output 1 (active / passive), digital output 1 & 2 (passive), current output 2 (passive), HART				G2	
Current output 1 (active / passive), digital output 1 & 2 (passive), current output 2 (passive), current output 3 (passive), HART				G3	
Current output 1 (active / passive), digital output 1 & 2 (passive), current output 2 (passive), 24 V DC transmitter loop power supply, HART				G4	
Current output 1 (active / passive), digital output 1 & 2 (passive), HART Advanced Physical Layer (APL)				L1**	
Others				Z9	
Power supply					
100 to 230 V AC					A
11 to 30 V DC					C

* Available with single-compartment housing only in 'Not Ex' or 'Zone 2' or 'Div 2' design

** Only available with dual-compartment housing, for Profinet, Modbus TCP, web server.

... Transmitter

... Ordering information

Additional ordering information

Additional ordering information									
CoriolisMaster FCT430 Coriolis mass flow transmitter	**XX**	**XX**	**XXX**	**XX**	**XXX**	**XXX**	**XX**	**XX**	**XXX**
CoriolisMaster FCT450 Coriolis mass flow transmitter	**XX**	**XX**	**XXX**	**XX**	**XXX**	**XXX**	**XX**	**XX**	**XXX**
Mounting bracket / material									
For 2 in pipe assembly / carbon steel	B1								
Certificates									
Certificate of compliance 2.1 to EN 10204 for order conformity		C4							
Acceptance test certificate 3.1 to EN 10204 for visual, dimensional, and functional checks		C6							
Ship register certificates									
DNVGL/DNVSE – marine approval			CL1						
Bureau Veritas			CL4						
Legal metrology									
Transport subject to verification according to MID (OIML Cl 0.5/0.3)				CT3					
Transport subject to verification according to MID (OIML Cl 0.5)				CT4					
INMETRO Metrologic CL 0.5/0.3				CT5					
INMETRO Metrologic CL 0.5				CT6					
Option card 1									
1 × digital input					DRN				
1 × passive digital output					DRG				
1 × analog output passive (4 to 20 mA)					DRA				
1 × active digital output					DRH				
24 V DC transmitter loop power supply					DRT				
1 × MODBUS					DRM				
1 × PROFIBUS DP					DRD				
2 port Std. Ethernet (various protocols)					DR6*				
Ethernet (various protocols)					DR7**				
Option card 2									
1 × digital input						DSN			
1 × passive digital output						DSG			
1 × analog output passive (4 to 20 mA)						DSA			
1 × active digital output						DSH			
Power over Ethernet module / Modbus						DS8*			
Integrated digital display (LCD)									
No display, with lid							L0		
With capacitive buttons / display (TTG) / glass lid							L2		
Functional safety									
SIL2 certificate								CS	
Language in the device display									
German									BM1
English									BM5
French									BM4
Spanish									BM3
Italian									BM2
Portuguese									BMA
Chinese									BM6

* Only available with single-compartment housing, non-Ex or Zone 2, Division 2

** Only available with dual-compartment housing, for Profinet, Modbus TCP, web server.

Continued on next page

Additional ordering information					
CoriolisMaster FCT430 Coriolis mass flow transmitter	**XX**	**XX**	**XXX**	**XXX**	**XX**
CoriolisMaster FCT450 Coriolis mass flow transmitter	**XX**	**XX**	**XXX**	**XXX**	**XX**
Documentation Language					
German	M1				
English	M5				
Western Europe / Scandinavia language package					
(languages: DE, EN, DA, ES, FR, IT, NL, PT, FI, SV)	MW				
Language package Eastern Europe					
(Languages: DE, EL, CS, ET, LV, LT, HU, PL, SK, SL, RO, BG)	ME				
Others	MZ				
Name plate					
Stainless steel plate with TAG no.		T1			
Ambient temperature range					
−40 to 70 °C (−40 to 158 °F)			TA9		
Communication option activated					
Ethernet IP				GCE*	
Modbus TCP				GCM*	
Web server				GCW*	
PROFINET				GCP*	
Connection type Std. Ethernet					
Without					U0
1 × M 12 plug connector for Std. Ethernet 1 port (4 signal lines)					UE*
2 × M 12 plug connector for Std. Ethernet 2 Port (4 signal lines)					UF*
1 × M 12 plug connector for Std. Ethernet 1 port (8 signal lines)					UG*
1 × RJ45 connector with 5 m cable length attached (4 signal lines)					U5*
2 × RJ45 connector with 5 m cable length attached (4 signal lines)					UB*
1 × RJ45 connector with 5 m cable length attached (8 signal lines)					UC*
1 × RJ45 connector with 10 m cable length attached (4 signal lines)					U6*
2 × RJ45 connector with 10 m cable length attached (4 signal lines)					DU*
1 × RJ45 connector with 10 m cable length attached (8 signal lines)					UH*
1 × RJ45 connector with 15 m cable length attached (4 signal lines)					U7*
2 × RJ45 connector with 15 m cable length attached (4 signal lines)					UJ*
1 × RJ45 connector with 15 m cable length attached (8 signal lines)					UK*
1 × RJ45 connector with 20 m cable length attached (4 signal lines)					U8*
2 × RJ45 connector with 20 m cable length attached (4 signal lines)					UN*
1 × RJ45 connector with 20 m cable length attached (8 signal lines)					UP*

* Only available with single-compartment housing and Ethernet

Note

When using the outputs of the M6 option digital output or the DRH/DSH option active digital output option cards, all the option cards used and all pre-installed output circuits must use the ‘Increased safety’ (Ex-e) IP rating. The ‘Intrinsic safety’ (Ex i) IP rating is not permitted.

Digital communication

HART® Communication

Note
The HART® protocol is an unsecured protocol (in terms of IT and cyber security), as such the intended application should be assessed to ensure that this protocol is suitable before implementation.

In connection with the DTM (Device Type Manager) available to the device, communication (configuration, parameterization) can be carried out FDT 0.98 or 1.2.
Other tool or system integrations (e.g. Emerson AMS / Siemens PCS7) on request.

The necessary DTMs and other files can be downloaded from www.abb.com/flow.

HART output	
Terminals	Active: Uco / 32 Passive: 31 / 32
Protocol	HART 7.1
Transmission	FSK modulation on current output 4 to 20 mA in accordance with the Bell 202 standard
Baud rate	1200 baud
Signal amplitude	Maximum 1.2 mAss

Factory setting of the HART process variables

HART process variable	**Process value**
Primary Value (PV)	Q_m – Mass flow
Secondary Value (SV)	Q_v – Volume flow rate
Tertiary Value (TV)	p – Density
Quaternary Value (QV)	T_m – Measuring medium temperature

The process values of the HART variables can be set in the device menu.

Modbus RTU® communication

Note
The Modbus® protocol is an unsecured protocol (in terms of IT and cyber security), as such the intended application should be assessed to ensure that this protocol is suitable before implementation.

Modbus is an open standard owned and administrated by an independent group of device manufacturers styled the Modbus Organization (www.modbus.org/).
Using the Modbus protocol allows devices made by different manufacturers to exchange information via the same communication bus, without the need for any special interface devices to be used.

Modbus protocol	
Terminals	V1 / V2
Configuration	Via the Modbus interface or via the local operating interface in connection with a corresponding Device Type Manager (DTM)
Transmission	Modbus RTU - RS485 serial connection
Baud rate	2400, 4800, 9600, 19200, 38400, 56000, 57600, 115200 baud Factory setting: 9600 baud
Parity	None, even, odd Factory setting: odd
Stop bit	One, two Factory setting: One
IEEE format	Little endian (LSB first), Big endian (MSB first) Factory setting: Big endian Big Endian -> MSB first (default) Little Endian -> LSB first
Typical response time	< 100 ms
Response delay time	0 to 200 ms Factory setting: 10 ms

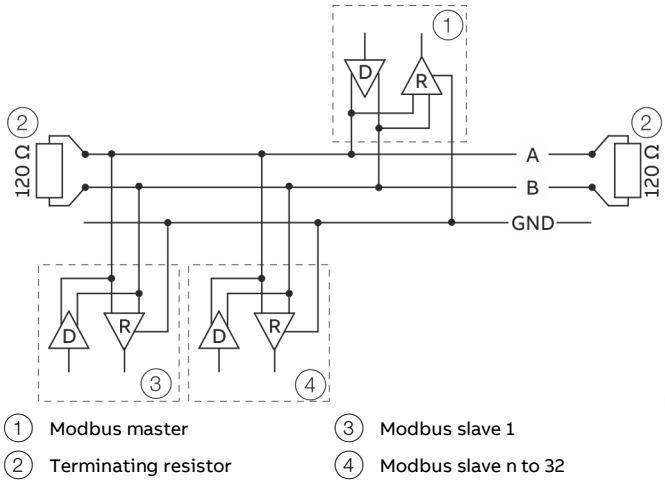

Figure 47: Communication via Modbus protocol

Cable specification

The maximum permissible length is dependent on the baud rate, the cable (diameter, capacity and surge impedance), the number of loads in the device chain, and the network configuration (2-core or 4-core).

- At a baud rate of 9600 and with a conductor cross-section of at least 0.14 mm^2 (AWG 26), the maximum length is 1000 m (3280 ft).
- When using a 4-core cable as a 2-wire wiring system, the maximum length must be halved.
- The spur lines must be short, a maximum of 20 m (66 ft).
- When using a distributor with 'n' connections, each branch must have a maximum length of 40 m (131 ft) divided by 'n.'

The maximum cable length depends on the type of cable used. The following standard values apply:

- Up to 6 m (20 ft):
  cable with standard shielding or twisted-pair cable.
- Up to 300 m (984 ft):
  double twisted-pair cable with overall foil shielding and integrated earth cable.
- Up to 1200 m (3937 ft):
  double twisted-pair cable with individual foil shielding and integrated earth cables. Example: Belden 9729 or equivalent cable.

A category 5 cable can be used for Modbus RS485 up to a maximum length of 600 m (1968 ft). For the symmetrical pairs in RS485 systems, a surge impedance of more than 100 Ω is preferred, especially at a baud rate of 19200 and above.

PROFIBUS DP® communication

Note

The PROFIBUS DP® protocol is an unsecured protocol (in terms of IT and cyber security), as such the intended application should be assessed to ensure that this protocol is suitable before implementation.

PROFIBUS DP interface	
Terminals	V1 / V2
Configuration	Via the PROFIBUS DP interface or via the local operating interface in connection with a corresponding Device Type Manager (DTM)
Transmission	Based on IEC 61158-2
Baud rate	9.6 kbps, 19.2 kbps, 45.45 kbps, 93.75 kbps, 187.5 kbps, 500 kbps, 1.5 Mbps The baud rate is automatically detected and does not need to be configured manually
Device profile	PA Profile 3.02
Bus address	Address range 0 to 126 Factory setting: 126

For commissioning purposes, you will need a device driver in EDD (Electronic Device Description) or DTM (Device Type Manager) format plus a GSD file.

You can download EDD, DTM and GSD from www.abb.com/flow.

The files required for operation can also be downloaded from www.profibus.com.

ABB provides three different GSD files which can be integrated in the system.

ID number	**GSD file name**	
0x9741	PA139741.gsd	2xAI, 1xTOT
0x9742	PA139742.gsd	3xAI, 1xTOT
0x3434	ABB_3434.gsd	8xAI, 3xTOT, 2xAO, 1xDI, 3xDO

Users decide at system integration whether to install the full range of functions or only part. Switching is made using the 'Ident Nr. Selector' parameter.

Refer to **Parameter description** in the operating instruction on page 105.

... Digital communication

... PROFIBUS DP® communication

Limits and rules when using ABB fieldbus accessories

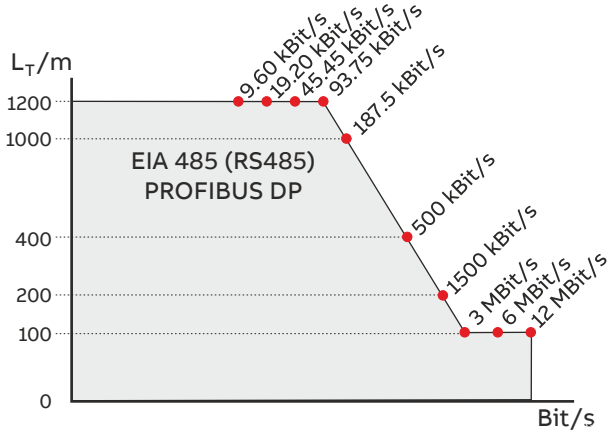

Figure 48: Bus cable length depends on the transmission rate

Pro PROFIBUS Line

(Line = Starts at DP Master and goes to last DP/PA Slave)

- Approximately 4 to 8 DP segments through the repeater (see repeater data sheets)
- Recommended DP transfer rate 500 to 1500 kBit/s
- The slowest DP node determines the transfer rate of the DP line
- Number of PROFIBUS DP and PA nodes ≤ 126 (addresses 0 to 125)

Per PROFIBUS DP segment

- Number of DP nodes ≤ 32
  (Node = Devices with / without PROFIBUS address)
- Bus termination required at the beginning and end of each DP segment!
- Trunk cable length (L_T) see diagram (length dependent on transfer rate)
- Cable length of at least 1 m between two DP nodes at ≥ 1500 kBit/s!
- Spur cable length (L_S), at ≤ 1500 kBit/s: LS ≤ 0.25 m, at > 1500 kBit/s: LS = 0.00 m!
- At 1500 kBit/s and ABB DP cable type A:
  - Sum of all spur cable lengths (L_S) ≤ 6.60 m, trunk cable length (L_T) > 6.60 m, total length = L_T+ (Σ L_S) ≤ 200 m, maximum 22 DP nodes (= 6.60 m / (0.25 m + 0.05 m spare))

Standard Ethernet communication

Standard Ethernet 10/100 BASE-T/TX (IEEE802.3)

Connection via twisted-pair cable (Cat. 5-cable).

With the standard Ethernet plug-in card, the transmitter features 2 Ethernet connections.
The network can be implemented using the ring, star or daisy chain topology.

In addition to the standard Ethernet plug-in card, a plug-in card for 'Power over Ethernet' is available.
Using this card, the 24 V DC version of the flowmeter can be operated via PoE without any additional power supply.

Note

You will find detailed information regarding the "Ethernet" in the interface description "COM/FCB400/FCH400/E/MB".

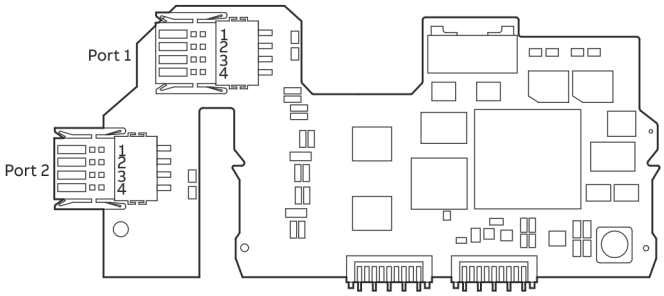

Figure 49: Plug-in card for standard Ethernet communication

Single port connection without Power over Ethernet

Standard Ethernet 10/100 BASE-T/TX (IEEE802.3) Single port connection.

Terminal designation:

Connection	Pin	Function	Color codes
1	Pin 1	RD+	White / Orange
	Pin 2	RD–	Orange
	Pin 3	TD+	White / Green
	Pin 4	TD–	Green

Single port connection with Power over Ethernet

Standard Ethernet 10/100 BASE-T/TX (IEEE802.3) Single port connection.

Terminal designation:			
Connection	**Pin**	**Function**	**Color codes**
1	Pin 1	RD+	White / Orange
	Pin 2	RD–	Orange
	Pin 3	TD+	White / Green
	Pin 4	TD–	Green
2	Pin 1	PWR+	White / Blue
	Pin 2	PWR+	Blue
	Pin 3	PWR–	White / Brown
	Pin 4	PWR–	Brown

Dual port connection without Power over Ethernet

Terminal designation:			
Connection	**Pin**	**Function**	**Color codes**
1	Pin 1	RD+	White / Orange
	Pin 2	RD–	Orange
	Pin 3	TD+	White / Green
	Pin 4	TD–	Green
2	Pin 1	RD+	White / Orange
	Pin 2	RD–	Orange
	Pin 3	TD+	White / Green
	Pin 4	TD–	Green

Ethernet APL™ communication

Ethernet APL™ interface V1 / V2 (plug-in card)

An Ethernet APL interface can be implemented using the ‘Ethernet APL (yellow)’ plug-in card.

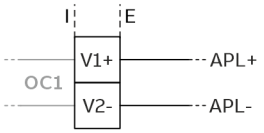

Figure 50: Plug-in card as an Ethernet APL interface (I = internal, E = external)

The corresponding plug-in card can only be used in slot OC1.

Ethernet APL interface	
Terminals	V1 (APL+) / V2 (APL–)
APL Power Class	Power Load, Power Class A
Supply voltage	9,6 to 15 V DC
Power consumption	540 mW

It is recommended to use the middle cable gland to route the APL cable into the housing.

Properties of the Ethernet APL interface

- 10 Mbit/s full duplex, 2-wire Ethernet based on IEEE 802.3cg 10BASE-T1L.
- System integration with PROFINET®, Modbus TCP®, Webserver.
- Reliability, long-term stability, high precision and advanced diagnostic functions in critical processes

… Digital communication

… Ethernet APL™ communication

Ethernet-APL™ network topology

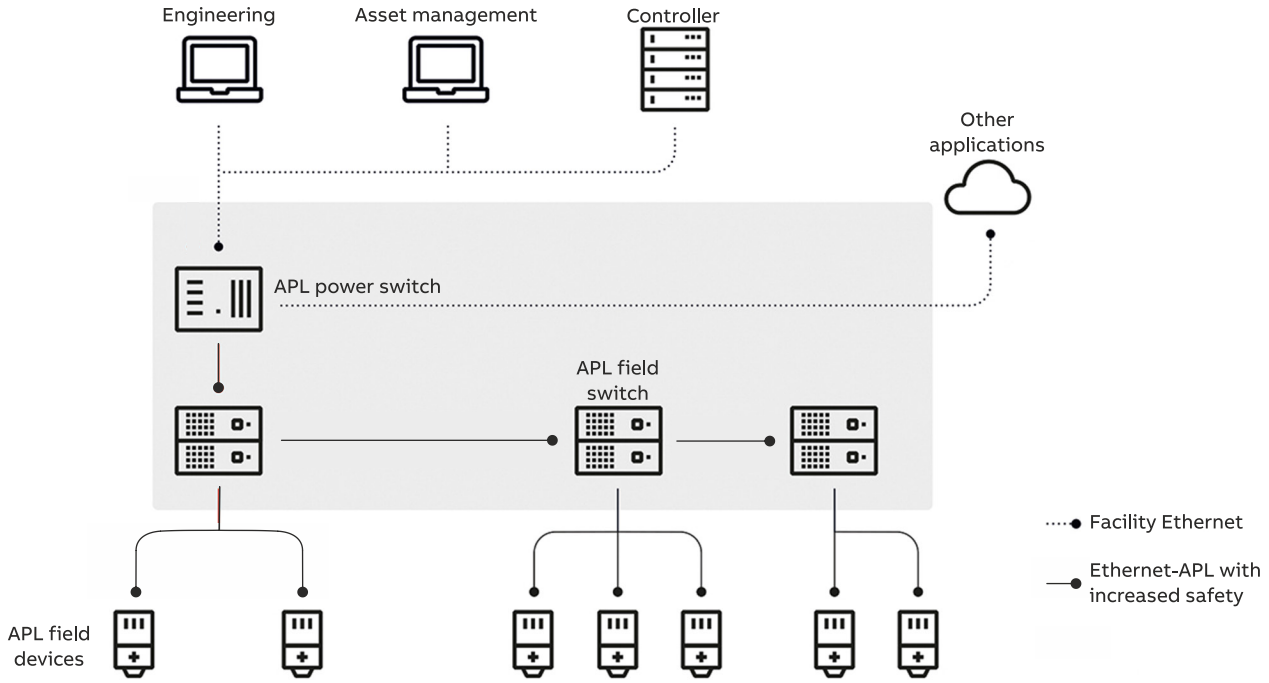

Figure 51: Exemplary Ethernet-APL topology

Connection to an SPE Switch (Single Pair Ethernet)
Outside of potentially explosive atmospheres, the device can be connected to a suited SPE field switch.

The device can be connected to an SPE field switch with a maximum voltage of 30 V DC and a minimum output of 1.85 watts.

The SPE field switch must support the 10BASE-T1L Standard and the PoDL power classes 10, 11 or 12 as well detect SPE field devices without an integrated PoDL module (without handshake).

A function for disabling the recognition of the power classes within the SPE Switch must be present.

Connection to an APL-Field-Switch
Operation of the Device must be in accordance with APL-Port Classifications:

- Within the hazardous area: SLAA or SLAC
- In safe area: SLAX
- Maximum Voltage: 15 V DC
- Minimum Power: 0,54 W

Ethernet APL cable specifications

- Symmetrical, shielded twisted-pair cable with a characteristic impedance of 100 Ω, ±20 % and a frequency range of 100 kHz to 20 Mhz, such as the PROFIBUS PA cable.
- Wire cross-section 0.14 to 2.5 mm^2 (26 to 14 AWG), either as a solid wire conductor or a strand.
- The outside diameter of the cable must be from 6 to 12 mm (0.24 to 0.47in) to guarantee the seal integrity required in the cable gland.
- The reference cable type is the fieldbus cable type A, MAU type 1 and 3 specified in IEC 61158-2.
  This cable meets the requirements for intrinsically safe applications as described in IEC TS 60079-47, but can also be used in non-intrinsically safe applications.

Protocols and ports on the Ethernet interface

Depending on the type of Ethernet communication, the device supports the following protocols:

Standard Ethernet communication		
Protocol	**Ports**	**Safety**
EtherNet/IP™	TCP 44818, UDP 2222	Unsecured protocol
Modbus TCP®	TCP 502	Unsecured protocol
PROFINET®	UDP 34964, 49152	Unsecured protocol
Webserver https	TCP443	Secured protocol, security based on .x509 certificates

Ethernet APL™ communication		
Protocol	**Ports**	**Safety**
Modbus TCP®	TCP 502	Unsecured protocol
PROFINET®	UDP 34964, 49152	Unsecured protocol
Webserver https	TCP443	Secured protocol, security based on .x509 certificates

All the protocols can be activated / deactivated in the HMI Menu.

EtherNet/IP™ and PROFINET® protocol

Note

The EtherNet/IP™ or PROFINET® protocols are unsecured protocols (in terms of IT or cyber security), as such the intended application should be assessed to ensure that these protocols are suitable before implementation.

The EtherNet/IP and PROFINET protocols support cyclic communication. Process variables, diagnosis data and information on the device status can be cyclically accessed.

Both protocols support DHCP (Dynamic Host Configuration Protocol), only PROFINET also supports DCP (Discovery and Configuration Protocol).

A web server is available for device configuration with full access to all parameters and diagnosis data.

EtherNet/IP protocol	
Available for	Standard Ethernet communication
Configuration	Via the web server or the local operating interface (display).
Ethernet/IP product code	5001
EDS data	FCB4_FCH4_01_01.eds
Device profile	Profile 0x43, generic device (can be set up individually).
Support standards and protocols	Common Industrial Protocol (CIP™) Vol1, Ed. 3.25
	EtherNet/IP™ CIP™ adaptation, Vol2, Ed. 1.23

PROFINET protocol	
Available for	Standard Ethernet communication, Ethernet-APL™ communication
Configuration	Via the web server or the local operating interface (display).
Device profile	Manufacturer-specific and PA Profile 4.02MU1*
GSDML file** (standard Ethernet)	GSDML-V2.42-ABB_001A-3436_FLOW_CORIOLIS-20230127.xml
GSDML file** (Ethernet-APL™)	GSDML-V2.45-ABB_001A-343A_FLOW_CORIOLIS-20250619-001200.xml or newer
Device ID (standard Ethernet)	ABB 0x3436 (manufacturer-specific) or PNO 0xB333 (PA Profile)
Device ID (Ethernet-APL™)	ABB 0x343A (manufacturer-specific) or PNO 0xB333 (PA Profile)
Support standards and protocols	Common Industrial Protocol (CIP™) Vol1, Ed. 3.25
	EtherNet/IP™ CIP™ adaptation, Vol2, Ed. 1.23
	PROFINET PNO_Version V2.42 for standard Ethernet PROFINET PNO Version V2.45 for Ethernet-APL™

* The standard for this PA Profile has currently not yet been released; the device can however work with the GSDML PA Profile.

** Available in the download area of the web server.

Use in potentially explosive atmospheres

Note
Further information on the approval of devices for use in potentially explosive atmospheres can be found in the type examination certificates or the relevant certificates at www.abb.com/flow.

Device overview

ATEX, IECEx and UKEX

	Standard / no explosion protection		Zone 2, 21, 22		Zone 1, 21 (Zone 0)	
Model number	**FCx4xx Y0**		**FCx4xx A2**		**FCx4xx A1**	
Integral mount design • Standard • Zone 2, 21, 22 • Zone 1, 21 • Zone 0	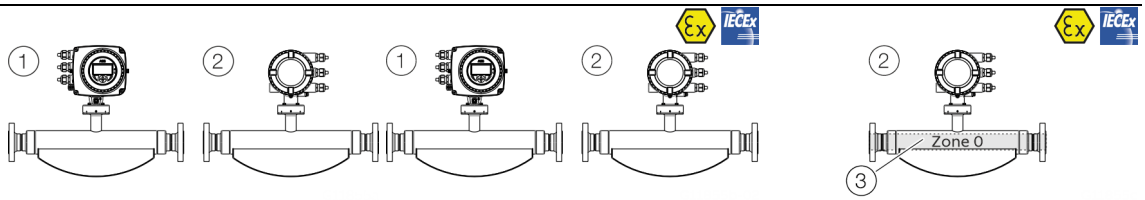					
Model number	**FCT4xx Y0**	**FCx4xx Y0**	**FCT4xx A2**	**FCx4xx A2**	**FCT4xx A1**	**FCx4xx A1**
Remote mount design Transmitter and flowmeter sensor • Standard • Zone 2, 21, 22 • Zone 1, 21 • Zone 0	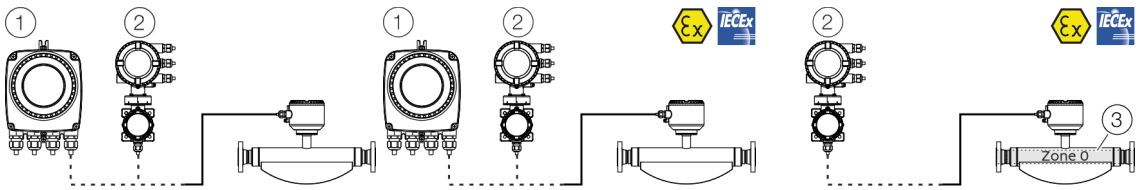					
Model number	**FCT4xx Y0**		**FCT4xx A2**		**FCx4xx A1**	
Remote mount design Transmitter • Standard • Zone 2, 21, 22 Sensor • Zone 1, 21 • Zone 0	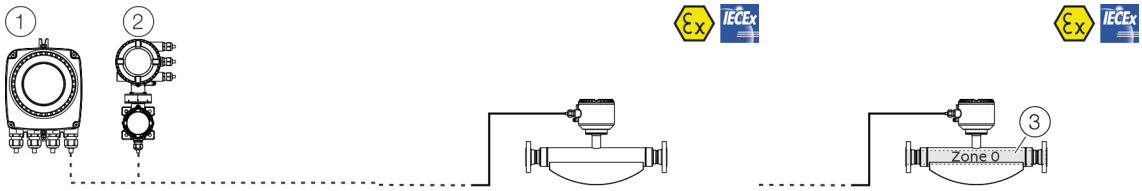					
Model number	—		**FCT4xx A2**		**FCx4xx A1**	
Remote mount design Transmitter • Zone 2, 21, 22 Sensor • Zone 1, 21	—		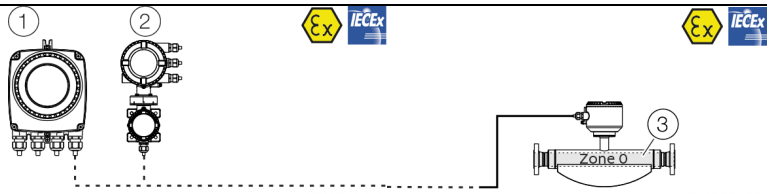			

(1) Single-compartment housing
(2) Dual-compartment housing
(3) Zone 0 within the meter tube

INMETRO Explosion protection approval

The INMETRO approval is based on the ATEX / IECEx approval. All the requirements from the ATEX / IECEx approval should be considered here.

cFMus

	Standard / no explosion protection	Class I Div. 2 / Zone 2	Class I Div. 1 / Zone 1 (Zone 0)
Model number	**FCx4xx Y0**	**FCx4xx F2**	**FCx4xx F1**
Integral mount design • Standard • Div. 2 / Zone 2 • Div. 1 / Zone 1 (Zone 0)	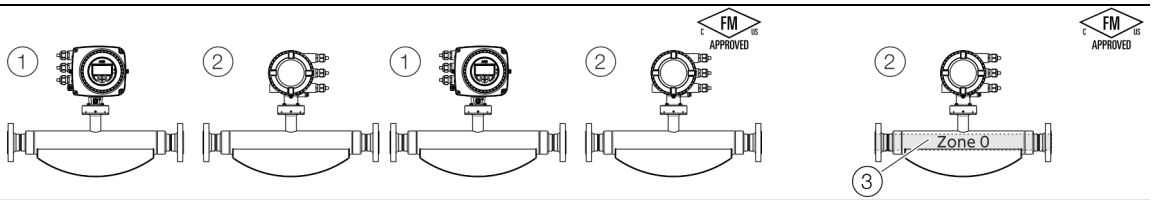		

Model number	**FCT4xx Y0**	**FCx4xx Y0**	**FCT4xx F2**	**FCx4xx F2**	**FCT4xx F1**	**FCx4xx F1**
Remote mount design Transmitter and flowmeter sensor • Div. 2 / Zone 2 • Div. 1 / Zone 1 (Zone 0)	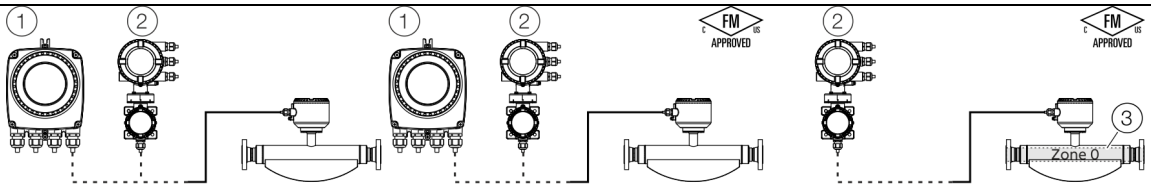					

Model number	**FCT4xx Y0**	**FCT4xx F2**	**FCx4xx F1**
Remote mount design Transmitter • Standard Sensor • Div. 2 / Zone 2 • Div. 1 / Zone 1 (Zone 0)	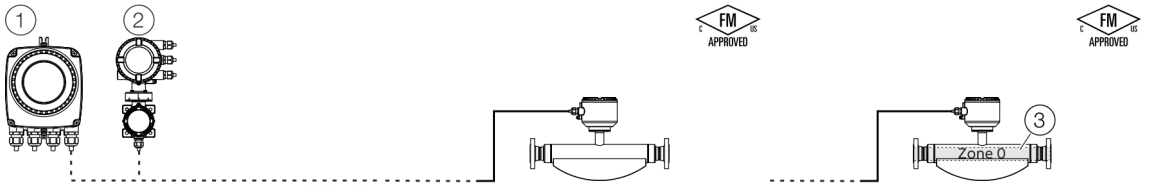		

Model number	—	**FCT4xx F2**	**FCx4xx F1**
Remote mount design Transmitter • Div. 2 / Zone 2 Sensor • Div. 1 / Zone 1 (Zone 0)	—	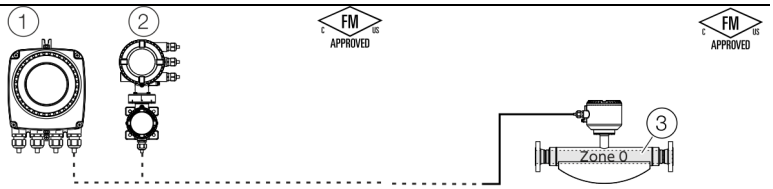	

(1) Single-compartment housing

(2) Dual-compartment housing

(3) Zone 0 within the meter tube

… Use in potentially explosive atmospheres

Ex marking

Description of model numbers

Each device design has a specific model number. The parts of the model number relating to explosion protection are listed in the following table. The complete model number key, as well as the selection possibilities are described in **Ordering information** on page 53 (sensor) and **Ordering information** on page 78 (transmitter).

Basic model	**FCa4c**	**d**	**m**	**f**	**g**	**h**	**i**	**j**	k	l	m
Explosion protection											
Design / terminal box material / cable glands											
Nominal diameter / nominal connection diameter				xxxxx							
Process connection					xx						
Material for wetted parts											
Flow rate calibration							x				
Density calibration								x			
Design / transmitter housing / transmitter housing material / cable gland											
Outputs											
Power supply											

ATEX, IECEx and UKEX

Model number for use in Zone 2, 21	Ex marking	Certificate
FCa4c – A2Y0fghijD; FCa4c – U2Y0fghijD Integral mount design with dual-compartment housing	II3G Ex ec IIC T6...T1 Gc II2D Ex tb IIIC T80°C...Tmedium Db	**ATEX:** FM15ATEX0014X, FM15ATEX0016X
FCa4c – A2efghijY; FCa4c – U2efghijY Sensor in remote mount design with dual-compartment housing		**IECEx:** IECEXFME150005X
FCT4c – A2R; FCT4c – U2R Transmitter in remote mount design with dual-compartment housing	II3G Ex ec IIC T6 Gc II2D Ex tb IIIC T80°C Db	

Model number for use in Zone 1, 21	Ex marking	Certificate
FCa4c – A1Y0fghijDx (x = 1 to 4) Integral mount design with dual-compartment housing	II 1/2 (1) G Ex db eb ia mb [ia Ga] IIC T6…T1 Gb II 2 (1) D Ex ia tb [ia Da] IIIC T80°C Db	**ATEX:** FM15ATEX0015X
FCa4c – A1Y0fghijDx (x = 5 to 8) Integral mount design with dual-compartment housing (flameproof enclosure 'Ex d')	II 1/2 (1) G Ex db ia mb [ia Ga] IIB+H2 T6...T1 Gb II 2 (1) D Ex ia tb [ia Da] IIIC T80°C Db	**IECEx:** IECEXFME150005X
FCa4cA1Y0fghM6jDx (x=1 to 4) or DRH or DSH option card Integral mount design with dual-compartment housing and active digital output option card	II 1/2 G Ex db eb mb ia IIC T6…T1 Gb II 2 D Ex ia tb IIIC T80°C Db	
FCa4c – A1efghijY Sensor in remote mount design with dual-compartment housing	II 1/2 G Ex eb ia mb IIB+H2 T6…T1 Ga/Gb II 2 D Ex ia tb IIIC T80°C Db	
FCa4cA1Y0fghM6jDxx (x=5 to 8) or DRH or DSH option card Integral mount design with dual-compartment housing (flameproof enclosure 'Ex d') and active digital output option card	II 1/2 G Ex db mb ia IIB+H2 T6...T1 Gb II 2 D Ex ia tb IIIC T80°C Db	
FCT4c – A1R (x = 1 to 4) Transmitter in remote mount design with dual-compartment housing	II 2 (1) G Ex db e ia mb [ia Ga] IIC T6…T1 Gb II 2 (1) D Ex ia mb tb [ia Da] IIIC T80°C Db	
FCT4c – A1R (x = 5 to 8) Transmitter in remote mount design with dual-compartment housing (flameproof enclosure 'Ex d')	II 2 (1) G Ex db ia mb [ia Ga] IIB+H2 T6…T1 Gb II 2 (1) D Ex ia tb [ia Da] IIIC T80°C Db	
FCT4c – A1R (x = 1 to 4) fghM6 or DRH or DSH option card Transmitter in remote mount design with dual-compartment housing and active digital output option card	II 2 G Ex db eb mb IIC T6…T1 Gb II 2 D Ex mb tb IIIC T80°C Db	
FCT4c – A1R (x = 5 to 8) fghM6 or DRH or DSH option card Transmitter in remote mount design with dual-compartment housing (flameproof enclosure 'Ex d') and active digital output option card	II 2 G Ex db mb IIB+H2 T6…T1 Gb II 2 D Ex tb IIIC T80°C Db	

Note

- Depending on the design, a specific marking in accordance with ATEX or IECEx applies.
- ABB reserves the right to modify the Ex-marking. Refer to the name plate for the exact marking.

… Use in potentially explosive atmospheres

… Ex marking

cFMus

Model number for use in Division 2	Ex marking	
	Certificate: FM18US0160X	Certificate: FM18CA0073X
FCa4c – F2Y0fghijD Integral mount design with dual-compartment housing	NI: CL I,II,III Div 2, GPS ABCDEFG, T6…T1 CL I, ZN 2, AEx ec IIC T6…T1	DIP: CL II,III, Div 1, GPS EFG, T6 ZN 21, AEx ia tb IIIC T80°C
FCa4c – F2efghijY Sensor in remote mount design with dual-compartment housing	CL I, ZN 2, Ex ec IIC T6...T1	ZN21,Ex ia tb IIIC T80°C
Design in accordance with ANSI / ISA 12.27.01 as 'Single Seal Device'	See handbook for temperature class information	
FCT4c – F2R Transmitter in remote mount design with dual-compartment housing		
FCT4c – F2W Sensor in remote mount design with single-compartment housing	NI: CL I,II,III Div 2, GPS ABCDEFG, T6…T1 See handbook for temperature class information	DIP: CL II,III, Div 1, GPS EFG, T6

Model number for use in Division 1	Ex marking	
	Certificate: FM18US0160X	Certificate: FM18CA0073X
FCa4c – F1Y0fghijDx (x = 1 to 4) Integral mount design with dual-compartment housing	XP-IS: CL I, Div 1, GPS ABCD,T6…T1 (USA) DIP: CL II,III, Div 1, GPS EFG,T6	XP-IS: CL I, Div 1, GPS BCD,T6…T1 (CAN) ZN21, AEx ia tb IIIC T80°C
FCa4c – F1Y0fghijDx (x = 5 to 8) Integral mount design with dual-compartment housing (Explosionproof 'XP').	CL I, ZN 1, AEx db ia IIB+H2 T6…T1 CL I, ZN 1, Ex db ia IIB+H2 T6…T1	ZN21, Ex ia tb IIIC T80°C
Design in accordance with ANSI / ISA 12.27.01 as 'Single Seal Device'	See handbook for temperature class information and installation drawing 3KXF000028G0009	
FCa4c – F1Y0fghM6jDx (x = 1 to 4) or DRH or DSH option card Integral mount design with dual-compartment housing	XP-IS: CL I, Div 1, GPS ABCD,T6…T1 (USA) DIP: CL II,III, Div 1, GPS EFG,T6	XP-IS: CL I, Div 1, GPS BCD,T6…T1 (CAN) ZN21, AEx ia tb IIIC T80°C
FCa4c – F1Y0fghM6jDx (5 to 8) or DRH or DSH option card Integral mount design with dual-compartment housing (Explosionproof „XP").	CL I, ZN 1, AEx db ia IIB+H2 T6…T1 CL I, ZN 1, Ex db ia IIB+H2 T6…T1 See handbook for temperature class information and installation drawing 3KXF000028G0009	ZN21, Ex ia tb IIIC T80°C
FCa4c – F1efghijY Sensor in remote mount design with dual-compartment housing	XP-IS: CL I, Div 1, GPS BCD T6…T1 CL I, ZN 1, AEx db ia IIB+H2 T6…T1 CL I, ZN 1, Ex db ia IIB+H2 T6…T1	DIP: CL II,III, Div 1, GPS EFG,T6 ZN 21, AEx ia tb IIIC T80°C ZN21, Ex ia tb IIIC T80°C
Design in accordance with ANSI / ISA 12.27.01 as 'Single Seal Device'	See handbook for temperature class information and installation drawing 3KXF000028G0009	
FCT4c – F1Rx (x = 1 to 4) Transmitter in remote mount design with dual-compartment housing	XP-IS: CL I, Div 1, GPS BCD,T6…T1 (USA) DIP: CL II,III, Div 1, GPS EFG, T6	XP-IS: CL I, Div 1, GPS BCD,T6…T1 (CAN) ZN 21, AEx ia tb IIIC T80°C
FCT4c – F1Rx (x = 5 to 8) Sensor in remote mount design with dual-compartment housing (Explosionproof 'XP').	CL I, ZN 1, AEx db ia IIB+H2 T6…T1 CL I, ZN 1, Ex db ia IIB+H2 T6…T1 See handbook for temperature class information and installation drawing 3KXF000028G0009	ZN21,Ex ia tb IIIC T80°C
FCT4c – F1Rx (x = 1 to 4) fghM6 or DRH or DSH option card Transmitter in remote mount design with dual-compartment housing	XP-IS: CL I, Div 1, GPS BCD,T6…T1 (USA) DIP: CL II,III, Div 1, GPS EFG, T6	XP-IS: CL I, Div 1, GPS BCD,T6…T1 (CAN) ZN 21, AEx tb IIIC T80°C
FCT4c – F1Rx (x = 5 to 8) fghM6 or DRH or DSH option card Sensor in remote mount design with dual-compartment housing (Explosionproof 'XP').	CL I, ZN 1, AEx db IIB+H2 T6…T1 CL I, ZN 1, Ex db IIB+H2 T6…T1 See handbook for temperature class information and installation drawing 3KXF000028G0009	ZN21,Ex tb IIIC T80°C

Note

- Depending on the design, a specific marking in accordance with FM applies.
- ABB reserves the right to modify the Ex-marking. Refer to the name plate for the exact marking.

Temperature data

Temperature resistance for the connecting cable

The temperature at the cable entries of the device depends on the design, the measuring medium temperature T_{medium} and the ambient temperature $T_{amb.}$.

For the electric connection of the device, use only cables with sufficient temperature resistance in accordance with the following table.

Devices in integral mount design with dual-compartment housing

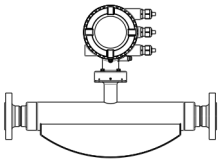

$T_{amb.}$	Temperature resistance
≤ 50 °C (≤ 122 °F)	≥ 70 °C (≥ 158 °F)
≤ 60 °C (≤ 140 °F)	≥ 80 °C (≥ 176 °F)
≤ 70 °C (≤ 158 °F)	≥ 90 °C (≥ 194 °F)

Devices in integral mount design with single-compartment housing

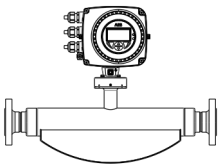

$T_{amb.}$	Temperature resistance
≤ 50 °C (≤ 122 °F)	≥ 75 °C (≥ 167 °F)
≤ 60 °C (≤ 140 °F)	≥ 85 °C (≥ 185 °F)
≤ 70 °C (≤ 158 °F)	≥ 95 °C (≥ 203 °F)

Sensor in remote mount design

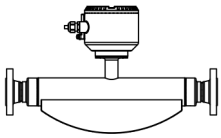

$T_{amb.}$	Temperature resistance
≤ 50 °C (≤ 122 °F)	≥ 105 °C (≥ 221 °F)
≤ 60 °C (≤ 140 °F)	≥ 110 °C (≥ 230 °F)
≤ 70 °C (≤ 158 °F)	≥ 120 °C (≥ 248 °F)

For sensors in remote mount design, the wires in the connection box must be additionally insulated with the enclosed silicone hoses starting from ambient temperatures of $T_{amb.}$ ≥ 60 °C (≥ 140 °F).

… Use in potentially explosive atmospheres

… Temperature data

Temperature classes and permissible measuring medium temperature

Measuring medium temperature for sensors in remote mount design

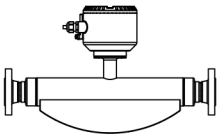

Model FCx4xx-A1… and FCx4xx-F1… in Zone 1

The table shows the maximum permissible measuring medium temperature as a function of ambient temperature and temperature class.

	Temperature class					
Ambient temperature $T_{amb.}$	**T1**	**T2**	**T3**	**T4**	**T5**	**T6**
≤ 30 °C (≤ 86 °F)	205 °C (400 °F)	205 °C (400 °F)	195 °C (383 °F)	130 °C (266 °F)	95 °C (203 °F)	80 °C (176 °F)
≤ 40 °C (≤ 104 °F)	205 °C (400 °F)	205 °C (400 °F)	195 °C (383 °F)	130 °C (266 °F)	95 °C (203 °F)	80 °C (176 °F)
≤ 50 °C (≤ 122 °F)	205 °C (400 °F)	205 °C (400 °F)	195 °C (383 °F)	130 °C (266 °F)	95 °C (203 °F)	80 °C (176 °F)
≤ 60 °C (≤ 140 °F)	205 °C (400 °F)	205 °C (400 °F)	195 °C (383 °F)	130 °C (266 °F)	95 °C (203 °F)	80 °C (176 °F)
≤ 70 °C (≤ 158 °F)	205 °C (400 °F)	205 °C (400 °F)	195 °C (383 °F)	130 °C (266 °F)	95 °C (203 °F)	80 °C (176 °F)

Model FCx4xx-A2… and FCx4xx-F2… in Zone 2, Division 2

The table shows the maximum permissible measuring medium temperature as a function of ambient temperature and temperature class.

	Temperature class					
Ambient temperature $T_{amb.}$	**T1**	**T2**	**T3**	**T4**	**T5**	**T6**
≤ 30 °C (≤ 86 °F)	205 °C (400 °F)* 195 °C (383 °F)	205 °C (400 °F)* 195 °C (383 °F)	195 °C (383 °F)* 130 °C (266 °F)	130 °C (266 °F)* 95 °C (203 °F)	95 °C (203 °F)* 80 °C (176 °F)	80 °C (176 °F)
≤ 40 °C (≤ 104 °F)	205 °C (400 °F)* 180 °C (356 °F)	205 °C (400 °F)* 180 °C (356 °F)	195 °C (383 °F)* 130 °C (266 °F)	130 °C (266 °F)* 95 °C (203 °F)	95 °C (203 °F)* 80 °C (176 °F)	—
≤ 50 °C (≤ 122 °F)	205 °C (400 °F)* 140 °C (284 °F)	205 °C (400 °F)* 140 °C (284 °F)	130 °C (266 °F)* 130 °C (266 °F)	130 °C (266 °F)* 95 °C (203 °F)	80 °C (176 °F)* 60 °C (140 °F)	—
≤ 60 °C (≤ 140 °F)	205 °C (400 °F)* 120 °C (248 °F)	205 °C (400 °F)* 120 °C (248 °F)	130 °C (266 °F)* 120 °C (248 °F)	130 °C (266 °F)* 95 °C (203 °F)	—	—
≤ 70 °C (≤ 158 °F)	180 °C (356 °F)* 80 °C (176 °F)	180 °C (356 °F)* 80 °C (176 °F)	130 °C (266 °F)* 80 °C (176 °F)	130 °C (266 °F)* 80 °C (176 °F)	—	—

* Only with the '**Extended tower length – TE1, TE2 or TE3**' order option

Measuring medium temperature for sensors in integral mount design with dual-compartment housing

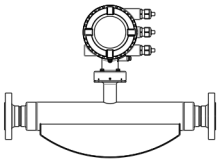

Model FCx4xx-A1... and FCx4xx-F1... in Zone 1, Division 1

The table shows the maximum permissible measuring medium temperature as a function of ambient temperature and temperature class.

	Temperature class					
Ambient temperature $T_{amb.}$	**T1**	**T2**	**T3**	**T4**	**T5**	**T6**
≤ 30 °C (≤ 86 °F)	205 °C (400 °F)* 130 °C (266 °F)	205 °C (400 °F)* 130 °C (266 °F)	195 °C (383 °F)* 130 °C (266 °F)	130 °C (266 °F)	95 °C (203 °F)	80 °C (176 °F)
≤ 40 °C (≤ 104 °F)	205 °C (400 °F)* 130 °C (266 °F)	205 °C (400 °F)* 130 °C (266 °F)	195 °C (383 °F)* 130 °C (266 °F)	130 °C (266 °F)	95 °C (203 °F)	80 °C (176 °F)
≤ 50 °C (≤ 122 °F)	205 °C (400 °F)* 130 °C (266 °F)	205 °C (400 °F)* 130 °C (266 °F)	195 °C (383 °F)* 130 °C (266 °F)	130 °C (266 °F)	95 °C (203 °F)	80 °C (176 °F)
≤ 60 °C (≤ 140 °F)	205 °C (400 °F)* 130 °C (266 °F)	205 °C (400 °F)* 130 °C (266 °F)	195 °C (383 °F)* 130 °C (266 °F)	130 °C (266 °F)	95 °C (203 °F)	80 °C (176 °F)
≤ 70 °C (≤ 158 °F)	205 °C (400 °F)* 130 °C (266 °F)	205 °C (400 °F)* 130 °C (266 °F)	195 °C (383 °F)* 130 °C (266 °F)	130 °C (266 °F)	95 °C (203 °F)	80 °C (176 °F)

* Only with the '**Extended tower length – TE1, TE2 or TE3**' order option

Model FCx4xx-A2... and FCx4xx-F2... in Zone 2, Division 2

The table shows the maximum permissible measuring medium temperature as a function of ambient temperature and temperature class.

	Temperature class					
Ambient temperature $T_{amb.}$	**T1**	**T2**	**T3**	**T4**	**T5**	**T6**
≤ 30 °C (≤ 86 °F)	205 °C (400 °F)	205 °C (400 °F)	195 °C (383 °F)*	130 °C (266 °F)	95 °C (203 °F)	80 °C (176 °F)* 50 °C (122 °F)
≤ 40 °C (≤ 104 °F)	205 °C (400 °F)	205 °C (400 °F)	195 °C (383 °F)*	130 °C (266 °F)	95 °C (203 °F)	—
≤ 50 °C (≤ 122 °F)	205 °C (400 °F)	205 °C (400 °F)	195 °C (383 °F)*	130 °C (266 °F)	—	—
≤ 60 °C (≤ 140 °F)	205 °C (400 °F)	205 °C (400 °F)	195 °C (383 °F)*	130 °C (266 °F)	—	—
≤ 70 °C (≤ 158 °F)	205 °C (400 °F)* 130 °C (266 °F)	205 °C (400 °F)* 130 °C (266 °F)	195 °C (383 °F)* 130 °C (266 °F)	130 °C (266 °F)	—	—

* Only with the '**Extended tower length – TE1, TE2 or TE3**' order option

… Use in potentially explosive atmospheres

… Temperature data

Measuring medium temperature for sensors in integral mount design with single-compartment housing

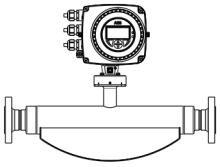

Model FCx4xx-A2… and FCx4xx-F2… in Zone 2, Division 2

The table shows the maximum permissible measuring medium temperature as a function of ambient temperature and temperature class.

	Temperature class					
Ambient temperature $T_{amb.}$	**T1**	**T2**	**T3**	**T4**	**T5**	**T6**
≤ 30 °C (≤ 86 °F)	205 °C (400 °F)	205 °C (400 °F)	195 °C (383 °F)	130 °C (266 °F)	95 °C (203 °F)	80 °C (176 °F)
≤ 40 °C (≤ 104 °F)	205 °C (400 °F)	205 °C (400 °F)	195 °C (383 °F)	130 °C (266 °F)	95 °C (203 °F)	—
≤ 50 °C (≤ 122 °F)	205 °C (400 °F)	205 °C (400 °F)	195 °C (383 °F)	130 °C (266 °F)	95 °C (203 °F)	—
≤ 60 °C (≤ 140 °F)	205 °C (400 °F)	205 °C (400 °F)	195 °C (383 °F)	130 °C (266 °F)	—	—
≤ 70 °C (≤ 158 °F)	205 °C (400 °F)	205 °C (400 °F)	195 °C (383 °F)	130 °C (266 °F)	—	—

* Only with the '**Extended tower length – TE1, TE2 or TE3**' order option

Electrical data

	Zones 2, 21	**Zone 1, 21 (Zone 0)**
	Division 2 and Zone 2, 21	**Division 1 and Zone 1, 21**
ATEX: – **IECEx:** –	**ATEX:** II 3 G & II 2 D **IECEx:** Gc & Db	**ATEX:** II 1/2 (1) G & II 2 (1) D II 1/2 G & II 2 D II 2 (1) G & II 2 (1) D **IECEx:** (Ga) Gb & (Da) Db Ga/Gb & Db (Ga) Gb & (Da) Db
USA: – **Canada:** –	**USA:** NI & DIP AEx ec & AEx tb **Canada:** Non-Incendive & Dust Ignition Proof Ex ec & Ex tb	**USA:** XP-IS & DIP AEx db ia & AEx ia tb **Canada:** XP-IS & DIP Ex db ia & Ex ia tb
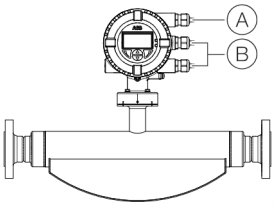		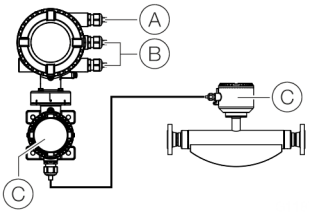
Ⓐ Power supply	Ⓑ Inputs / outputs, communication	Ⓒ Signal cable (remote mount design only)
• Type of protection ATEX / IECEx: Increased safety ‘Ex e’ • Flameproof enclosure type of protection USA / Canada: ‘non IS’ • Maximum 250 Vrms • Terminals: 1+, 2-, L, N, ⏚	• Type of protection ATEX / IECEx: Either increased safety ‘Ex e’ or intrinsically safe ‘Ex ia’ • Flameproof enclosure type of protection USA / Canada: Optionally ‘non IS’ or ‘Intrinsic safety IS’. • When installing in ‘Ex ia’ or ‘IS’, suitable intrinsically safe isolation amplifiers must be used for the connection. • Terminals: 31, 32, Uco, V1, V2, V3, V4, 41, 42, 51, 52	• Terminals: A, B, UFE, GRN • Type of protection ATEX / IECEx: Increased safety ‘Ex e’ • Flameproof enclosure type of protection USA / Canada: ‘non IS’

Note

When installing in ‘Ex ia’ or ‘IS’ type of protection, the type of protection is determined by the type of electrical connection.

… Use in potentially explosive atmospheres

… Electrical data

Zone 2, 21 and Division 2 – Model: FCx4xx-A2… and FCx4xx-F2…

Outputs on basic device	Operating values (general)		Type of protection – 'nA' / 'NI'	
	U_N	I_N	U_N	I_N
Current / HART output 31 / U_{CO}, active Terminals 31 / U_{CO}	30 V	30 mA	30 V	30 mA
Current / HART output 31 / 32, passive Terminals 31 / 32	30 V	30 mA	30 V	30 mA
Digital output 41 / 42, active* Terminals 41 / 42 and V1 / V2*	30 V	30 mA	30 V	30 mA
Digital output 41 / 42, active** Terminals 41 / 42 and U_{CO} / 32**	30 V	30 mA	30 V	30 mA
Digital output 41 / 42, passive Terminals 41 / 42	30 V	25 mA	30 V	25 mA
Digital output 51 / 52, active* Terminals 51 / 52 and V1 / V2*	30 V	30 mA	30 V	30 mA
Digital output 51 / 52, passive Terminals 51 / 52	30 V	30 mA	30 V	30 mA

All outputs are electrically isolated from each other and from the power supply.

Digital outputs 41 / 42 and 51 / 52 are not electrically isolated from each other. Terminals 42 / 52 have the same potential.

* Only in conjunction with additional '24 V DC loop power supply (blue)' plug-in card in slot OC1.

** Only in conjunction with current output U_{CO} / 32 in 'Powermode', see **Current output Uco / 32 as loop power supply for digital output 41 / 42 or 51 / 52** on page 70.

Inputs and outputs with optional plug-in cards	Operating values (general)		Type of protection – 'nA' / 'NI'	
	U_N	I_N	U_N	I_N
Current output V3 / V4, active*	30 V	30 mA	30 V	30 mA
Terminals V3 / V4 and V1 / V2*				
Current output V1 / V2, passive**	30 V	30 mA	30 V	30 mA
Current output V3 / V4, passive**				
Terminals V1 / V2** or V3 / V4**				
Digital output V3 / V4, active*	30 V	25 mA	30 V	25 mA
Terminals V3 / V4 and V1 / V2*				
Digital output V1 / V2, passive**	30 V	30 mA	30 V	30 mA
Digital output V3 / V4, passive**				
Terminals V1 / V2** or V3 / V4**				
Digital input V3 / V4, active*	30 V	3,45 mA	30 V	3,45 mA
Terminals V3 / V4 and V1 / V2				
Digital input V1 / V2, passive*	30 V	3,45 mA	30 V	3,45 mA
Digital input V3 / V4, passive*				
Terminals V1 / V2** or V3 / V4**				
Digital output V1 / V2, active*	24 V	22,5 mA	30 V	30 mA
Digital output V3 / V4, active*				
Terminals V1 / V2** or V3 / V4**				
Modbus / PROFIBUS DP	30 V	30 mA	30 V	30 mA
Terminals V1 / V2				
Standard Ethernet card	57 V	417 mA	57 V	417 mA
Ethernet (various protocols)				
Port 1 / Port 2				
Standard Ethernet card in connection with Power over Ethernet (POE card)	57 V	417 mA	57 V	417 mA
Ethernet (various protocols)				
Port 1 / Port 2				
Ethernet-APL™card (various protocols)	17,5 V	380 mA	17,5 V	380 mA
Terminals V1 / V2				

* Only in conjunction with additional '24 V DC loop power supply (blue)' plug-in card in slot OC1.

** The terminal assignment depends on the model number or the slot assignments.

… Use in potentially explosive atmospheres

… Electrical data

Zone 1 ,21 and Division 1 – Model: FCx4xx-A1… and FCx4xx-F1…

Type of protection	**'e' / 'XP'**		**'ia' / 'IS'**											
Outputs on basic device	**U_M [V]**	**I_M [A]**	**U_O [V]**	**U_I [V]**	**I_O [mA]**	**I_I [mA]**	**P_O [mW]**	**P_I [mW]**	**C_O [nF]**	**C_I [nF]**	**C_{OPA} [nF]**	**C_{IPA} [nF]**	**L_O [mH]**	**L_I [mH]**
Current / HART output 31 / U_{CO}, active Terminals 31 / U_{CO}	30	0.2	30	30	115	115	815	815	10	10	5	5	0.08	0.08
Current / HART output 31 / 32, passive Terminals 31 / 32	30	0.2	—	30	—	115	—	815	—	27	—	5	0.08	0.08
Digital output 41 / 42, active* Terminals 41 / 42 and V1 / V2*	30	0.1	27.8	30	119	30	826	225	20	20	29	29	0.22	0.22
Digital output 41 / 42, active** Terminals 41 / 42 and U_{CO} / 32**	30	0.1	30	30	115	115	826	225	16	16	10	10	0.08	0.08
Digital output 41 / 42, passive Terminals 41 / 42	30	0.1	—	30	—	30	—	225	—	27	—	5	—	0.08
Digital output 51 / 52, active* Terminals 51 / 52 and V1 / V2*	30	0.1	27.8	30	119	30	826	225	20	20	29	29	0.22	0.22
Digital output 51 / 52, passive Terminals 51 / 52	30	0.1	—	30	—	30	—	225	—	27	—	5	—	0.08

All outputs are electrically isolated from each other and from the power supply.

Digital outputs 41 / 42 and 51 / 52 are not electrically isolated from each other. Terminals 42 / 52 have the same potential.

* Only in conjunction with additional '24 V DC loop power supply (blue)' plug-in card in slot OC1.

** Only in conjunction with current output U_{CO} / 32 in 'power mode', see **Current output Uco / 32 as loop power supply for digital output 41 / 42 or 51 / 52** on page 70.

Type of protection	**'e' / 'XP'**		**'ia' / 'IS'**											
Inputs and outputs with optional plug-in cards	**U_M [V]**	**I_M [A]**	**U_O [V]**	**U_I [V]**	**I_O [mA]**	**I_I [mA]**	**P_O [mW]**	**P_I [mW]**	**C_O [nF]**	**C_I [nF]**	**C_{OPA} [nF]**	**C_{IPA} [nF]**	**L_O [mH]**	**L_I [mH]**
Current output V3 / V4, active* Terminals V3 / V4 and V1 / V2*	30	0.1	27.8	30	119	30	826	225	29	29	117	117	0.4	0.4
Current output V1 / V2, passive** **Current output V3 / V4, passive**** Terminals V1 / V2** or V3 / V4**	30	0.1	—	30	—	68	—	510	—	45	—	59	—	0.27
Digital output V3 / V4, active* Terminals V3 / V4 and V1 / V2*	30	0.1	27.8	30	119	68	826	225	17	17	31	31	0.4	0.4
Digital output V1 / V2, passive** **Digital output V3 / V4, passive**** Terminals V1 / V2** or V3 / V4**	30	0.1	—	30	—	30	—	225	—	13	—	16	—	0.27
Digital input V3 / V4, active* Terminals V3 / V4 and V1 / V2	30	0.1	27.8	30	119	3.45	826	25.8	17	17	31	31	0.4	0.4
Digital output V1 / V2, active*** **Digital output V3 / V4, active***** Terminals V1 / V2** or V3 / V4	30	0.7	—	—	—	—	—	—	—	—	—	—	—	—
Digital input V1 / V2, passive* **Digital input V3 / V4, passive*** Terminals V1 / V2** or V3 / V4**	30	0.1	—	30	—	3.45	—	25.8	—	13	—	16	—	0.27
Modbus / PROFIBUS DP Terminals V1 / V2	30	0.1	4.2	4.2	150	150	150	150	5300	5300	0.06	0.06	0.14	0.14
Ethernet-APL™card (various protocols) **Terminals V1 / V2 ???**	—	—	— —	17.5	—	380	—	5320	—	1	—	1	—	0.001

* Only in conjunction with additional '24 V DC loop power supply (blue)' plug-in card in slot OC1.

** The terminal assignment depends on the model number or the slot assignments.

*** Not available as intrinsically safe version.

… Use in potentially explosive atmospheres

… Electrical data

Special connection conditions

Note

The AS plug-in card (24 V DC power supply) must only be used to power the internal inputs and outputs on the device.
It must not be used to power external circuits!

Note

If the protective earth (PE) is connected in the flowmeter's terminal box, you must ensure that no dangerous potential difference can arise between the protective earth (PE) and the potential equalization (PA) in areas with explosion risk.

Note

For devices with a power supply of 11 to 30 V DC, on-site external overvoltage protection must be provided.
It must be ensured that the overvoltage is limited to 140 % (= 42 V DC) of the maximum operating voltage.

Note

- If the type of protection for the explosion protection of the device has not been marked on the name plate by the manufacturer, during installation of the device, the operator must identify the type of protection used on the name plate in a permanent manner!

The output circuits are designed so that they can be connected to both intrinsically-safe and non-intrinsically-safe circuits.

- Combining intrinsically safe and non-intrinsically safe circuits is not permitted.
- On intrinsically safe circuits, potential equalization should be established along the entire length of the cable used for the signal outputs.
- The rated voltage of the non-intrinsically safe circuits is U_M = 30 V.
- Intrinsic safety is preserved If the rated voltage U_M = 30 V is not up-scaled when connections are established to non-intrinsically safe external circuits.
- Once output circuits are connected and have been operated for a while, a change of the protection (instrinsically safe and vice versa) is not permitted.

The concept of intrinsic safety allows several approved intrinsically safe devices to be interconnected without additional intrinsic safety installation checks, if the relevant installation standards are observed.

Devices connected to the relevant equipment must not be operated at over 250 V_{rms} AC or 250 V DC to ground.

Installation in accordance with ATEX or IECEx must comply with the applicable national and international standards and directives.

Installation in the USA or Canada must comply with ANSI / ISA RP 12.6, ‘Installation of intrinsically safe systems for hazardous (classified) locations’, the ‘National Electrical Code (ANSI / NFPA 70), sections 504, 505’ and the ‘Canadian electrical code (C22.1-02)’.

Apparatus connected to the flowmeter must have appropriate explosion protection approval in accordance with the Entity concept.
The apparatus must have intrinsically safe circuits.
The apparatus must be installed and connected in accordance with the relevant manufacturer documentation.
The electrical specifications in **Electrical data** on page 97 must be observed.

Standard Ethernet communication

⚠ DANGER

Explosion hazard due to improper installation!
The standard Ethernet plug-in card is approved for use in Zone 2 / Division 2 hazardous areas only.

The output circuits are designed so that various topologies, such as Daisy Chain or Point-to-Point, can be connected. See **ATEX, IECEx, cFMus Installation diagram 3KXF000028G0009** for further information.

- Combining both topologies is not permitted.
- The standard Ethernet communication is available for installations in Zone 2/Division 2 only.
- The nominal voltage of the non-intrinsically safe circuits is U_M = 57 V.

Ethernet-APL™ communication

⚠ DANGER

Explosion hazard due to improper installation!
The "Ethernet-APL" plug-in card is approved for use in potentially explosive areas with type of protection "Ex i – intrinsic safety (Intrinsic safety)".

- Comply with the following instructions for use in Zone 1, 2 / Division 1, 2!

Approved for use in Zone 1 and Division 1:

- If the "Ethernet-APL" plug-in card is used in combination with other plug-in cards, all plug-in cards and output circuits must be designed in type of protection "Ex i – intrinsic safety (Intrinsic safety)".
- The "Ethernet-APL" plug-in card must not be used for type of protection "Ex e – Increased safety (Increased safety)".
- The "Ethernet-APL" plug-in card must not be used in combination with the "active digital output" or "Power-Over-Ethernet (POE)" plug-in cards.

Approved for use in Zone 2 and Division 2:

- If the "Ethernet-APL" plug-in card is used in combination with other plug-in cards, all plug-in cards and output circuits can be used in type of protection "Ex i – Intrinsic safety (Intrinsic safety)" or in "Ex e – Increased safety (Increased safety)".
- The "Ethernet-APL" plug-in card must not be used in combination with the "active digital output" or "Power-Over-Ethernet (POE)" plug-in cards.

Active digital output

⚠ DANGER

Risk of injury caused by live parts!
The 'active digital output' plug-in card is intended only for use in the 'Ex e – Increased Safety' (increased safety) type of protection and must not be used for intrinsically safe circuits.

- When the 'active digital output' plug-in card is used in combination with other plug-in cards, all plug-in cards used and all connected output current circuits used must be implemented in the 'Ex e – Increased Safety' (increased safety) type of protection.
- The option to change the ignition protection type is not permitted in conjunction with the "active digital output" plug-in card.

Questionnaire

Customer:	**Date:**
Ms. / Mr.:	**Department:**
Telephone:	**Fax:**

Measuring medium:	Liquid content:	Gas content:
Flow rate: (min., max., operating point)	kg/h	
Density: (min., max., operating point)	kg/m^3	
Dynamic viscosity: (min., max., operating point)	mPas/cP	
Measuring medium temperature: (min., max., operating point)	°C	
Ambient temperature	°C	
Pressure: (min., max., operating point)	bar	
Rate of flow:	☐ Steady	☐ Pulsating
Batch operation:	☐ Yes	☐ No
Concentration calculation:	☐ Yes	☐ No
Transmitter design:	☐ Integral mount design	☐ Remote mount design
Explosion protection:	☐ Yes	☐ No
Power supply:	☐ 100 to 230 V AC, 50/60 Hz	☐ 11 to 30 V DC
Electrical outputs:		**Communication**:
	☐ Current output I: 0/4 to 20 mA	☐ HART protocol
	☐ Current output II: 0/4 to 20 mA	
	☐ Current output III: 0/4 to 20 mA	
	☐ Pulse output, active	
	☐ Pulse output, passive	
Additional specifications: Pipeline diameter: Process connection:	.....mm	

Trademarks

CIP (Common Industrial Protocol) is a trademark of ODVA Inc.

Ethernet-APL is a trademark of the FieldComm Group, ODVA Inc., OPC Foundation and PROFIBUS Nutzerorganisation e.V.

EtherNet/IP is a trademark of ODVA Inc.

HART is a registered trademark of FieldComm Group, Austin, Texas, USA

Hastelloy is a registered trademark of Haynes International, Inc.

Modbus is a registered trademark of Schneider Automation Inc.

PROFIBUS®, PROFIBUS DP® and PROFINET® are registered trademarks of PROFIBUS & PROFINET International (PI)

Sales **Service**

Notes

ABB Measurement & Analytics

For your local ABB contact, visit:
go.abb/contact

For more product information, visit:
solutions.abb/flow

We reserve the right to make technical changes or modify the contents of this document without prior notice. With regard to purchase orders, the agreed particulars shall prevail.
ABB does not accept any responsibility whatsoever for potential errors or possible lack of information in this document.

We reserve all rights in this document and in the subject matter and illustrations contained therein. Any reproduction, disclosure to third parties or utilization of its contents – in whole or in parts – is forbidden without prior written consent of ABB.

© ABB 2026

3KXF411010R1001

DS/FCB400/FCH400-EN Rev. U 08.2026