Data Sheet DS/FER200/FEF200/FEV200–EN Rev. J

AquaMaster3
Electromagnetic flowmeter

The high value, precision solution for remote water metering and irrigation applications

Full range of power supply options for lowest cost site preparation and energy usage
— AC mains
— external long-life battery pack
— internal standard lithium D-cell battery
— solar / wind-power

Optional built in multi-sampling rate, pressure and flow data logger
— integrated, all-in-one solution
— high resolution flow and pressure data logger
— three instruments for the price of one – no need to purchase a separate pressure transmitter or data logger

Wireless communication via optional built in GSM modem
— access and download all logged data remotely
— remote diagnostics
— reduces the requirement for costly and time-consuming site visits

Fully self-contained or remote transmitter
— integral sensor / transmitter option
— remote transmitter option, where sensor is required to be buried for example

Peace of mind with class leading, fully potted, IP68 electronic package
— zero water ingress, even during flood conditions
— military specification IP68 plug and socket connections
— sealed-for-life = zero maintenance

Compatible with ABB's full range of industry-leading flow sensors
— reduced-bore series for high turn-down applications, for example, leakage detection
— full-bore series for general-purpose water metering and irrigation applications
— all sensors are buriable, eliminating the need for costly chamber construction – a significant site preparation saving

Full range of approvals
— optional MID approval
— optional OIML R049 approval
— NMI approval pending

Power and productivity
for a better world™

The Company

ABB is an established world force in the design and manufacture of instrumentation for industrial process control, flow measurement, gas and liquid analysis and environmental applications. As a world leader in process automation technology our worldwide presence, comprehensive service and application oriented know-how make ABB a leading supplier of flow measurement products.

Introduction

Setting the standard for the potable Water Industry

AquaMaster3, available in sizes 15 to 600 mm (1/2 to 24 in.) with a reduced-bore construction, it is the total solution for flow measurement in the potable water industry. Outstanding performance, innovative features and user benefits, coupled with low cost-of-ownership ensures that AquaMaster3 is the first choice for Leakage Management, District Metering, Bulk Revenue and Trunk Mains applications.

CalMaster2 – the verification tool

CalMaster2 is a suite of stand-alone field verification tools, that enables users to test the integrity of the AquaMaster flow meter system. An easy to use external verification device, coupled with fingerprinting technology, to determine the accuracy status of the AquaMaster flowmeter to within ±1 % of its original factory calibration. CalMaster2 also supports printing of calibration verification records for regulatory compliance.

Remote communications

AquaMaster3 has the added built in capability of a Quad Band GSM/SMS engine. This allows the user to be able to interrogate the flowmeter data remotely or have it sent direct to a host server. Flow data is recorded typically every 15 minutes and sent via SMS message to your server automatically, every day – and it's fast, easy and convenient. Pressure data is optionally sent in a separate message. Thousands of meters can be managed using this solution, which will run your whole network from one server.

Flow performance

With the widest flow range, optimum accuracy and long term stable calibration, the reduced-bore (FER) performance is OIML R49 type approved (DN40 to DN300) to the latest Class 1 and Class 2 accuracies. This low flow rate capability enables minimal night flow rates to be metered; particularly important for leakage management, bulk revenue and district metering applications. The clear bore of the AquaMaster3 eliminates the possibility of damage by particulate matter and the absence of moving and wearing components ensures that this unique level of performance is maintained long term. Accuracy as standard (±0.25 % Mains powered) or (±0.50% battery powered) in both forward and reverse flow directions.

Easy and quick commissioning

'Fit-and-Flow' data storage inside AquaMaster eliminates the need to match sensor and transmitter in the field. On initial installation, the self-configuration sequence automatically replicates into the transmitter all calibration factors, meter size and serial numbers, as well as customer site-specific settings, eliminating the opportunity for error

Logged data storage

The AquaMaster3 transmitter can contain an optional multi-speed, multi-channel, dual-variable logger. The ability of the logger to run at two speeds simultaneously enables the user to investigate, in precise detail, flow and pressure activity during a period of interest. AquaMaster3 eliminates such quantization effects, averaging digitally over the selected logging interval. Such high resolution data facilitates allow step testing, leakage detection and water network analysis.

Universal transmitter – powerful and flexible

AquaMaster3 design of mains, renewable energy and battery-powered transmitter. It has a stainless steel housing with a thermoplastic outer and the assembly is sealed-for-life to IP68 as standard. The transmitter incorporates military specification plug & socket connections for all inputs and outputs. The transmitter can be mounted integral with the AquaMaster sensor (integral mount) or remotely from the AquaMaster sensor (remote) to enable the sensor to be buried for example. For integral sensors, the mounting system positions the display so that it is visible from both the top and the side.

Assured quality

AquaMaster is designed and manufactured in accordance with international quality procedures (ISO 9001) and all flowmeters are calibrated on nationally-traceable calibration rigs to provide the end-user with complete assurance of both quality and performance of the meter.

AquaMaster – always the first choice

AquaMaster sets the standard for the potable water industry. The specification, features and user benefits offered by this range are based on ABB's worldwide experience in this industry and they are all targeted specifically to the industry's requirements.

Submersible and buriable

AquaMaster sensors have a rugged, robust construction to ensure a long, maintenance-free life under the arduous conditions experienced in the potable Water Industry. The sensors are, as standard, inherently submersible (IP68, NEMA 6P), thus ensuring suitability for installation in chambers and metering pits which are liable to flooding.

A unique feature of the AquaMaster sensors is that sizes DN40 to DN600 are buriable; installation merely involves excavating to the underground pipe, fitting the sensor, cabling back to the transmitter and then backfilling the hole.

Overview of the AquaMaster

A wide range of features and user benefits are built into AquaMaster as standard:

Solar and wind power

Utilizes a simple DC (6 to 22 V) connection from sources as small as a 5 W solar panel / wind generator. Wind generators and solar panels are not supplied by ABB.

Mains power with super capacitor back-up

- Mains-only option supplied with a built-in rechargeable super capacitor backup power source
- The super capacitor can operate for up to 5 days without power (depending on operating conditions)
- In the event of mains interruption, continuous measurement is maintained and alarms reported via SMS protocols for up to 5 days without power

External battery power for remote locations

- Up to 5-year* battery life (one SMS message per day)
- Manganese alkaline battery pack*
- Site-replaceable battery pack
- Optional lithium battery pack with 10-year battery life*
- The battery can be replaced without loss of logger contents enabling smooth switchover

Internal battery power, using standard lithium D-cells, for remote locations

- Readily-available, locally sourced, D-cell lithium batteries
- 6 years continuous operation*
- Totally sealed, IP68 integrated package
- Tamper-proof, anti-vandal, engineered solution – no exposed cables that can be cut
- Suitable for higher ambient temperature locations

* Operation at extremes of temperature can significantly shorten battery capacity and life.

Fit and Flow

- No need to match sensor and transmitter, sensor stores all calibration factors, site settings and serial numbers
- Bi-directional flow
- Flow, pressure and logger in one
- Fast, reliable installation, rated IP68 (NEMA 6P) for submerged use in flooded chambers
- Volume totalizer and tariff values backed-up in sensor for total security, tamper-resistant and MID approved
- Multiple, programmable password levels stored for measurement security
- Comprehensive display, 8 mm (0.31 in.) high displays for totals (exceeds ISO 4064 requirements)
- Resettable or secure totals
- All connections via military specification plug and socket
- 3 outputs (forward and reverse pulse, or pulses, direction and alarm)

Remote access via mobile phone technology

- Remote access to logger data over quad-band GSM network by SMS text message
- Remote configuration, status monitoring and preventive maintenance also via standard GSM mobile phones
- Automated metering and alarm reporting via SMS text

Typical applications

- Leakage management and non revenue water
- Bulk revenue metering
- District metering and Zonal networks
- Distribution and trunk main metering
- Irrigation and abstraction

OIML / MID approved

With the widest flow range, optimum accuracy and long term stable calibration, AquaMaster3 sets new performance standards in the water industry. The performance is OIML R49 type approved (DN40 to DN300) to the latest Class 1 and Class 2 accuracies with a tighter accuracy above Q 0.5 % and Q 0.25 %.

This low flow rate capability enables previously unrecordable minimal night flow rates to be metered; particularly important for bulk revenue and district metering applications. The unrestricted bore of the AquaMaster3 eliminates the possibility of damage by particulate matter and the absence of moving and wearing components ensures that this unique level of performance is maintained long term.

The unique design of the AquaMaster3 reduced-bore sensor conditions the flow profile in the measuring section so that distortions in the flow profile, either upstream or downstream, are flattened. The result is excellent in situ meter performance, even with very bad hydraulic installation conditions. Hydraulic disturbance tests conducted during OIML R49 type approval confirmed a guaranteed accuracy to Class 1 and Class 2, even with flow disturbers bolted directly on the meter, either upstream or downstream at zero pipe diameters. AquaMaster3 reduced-bore version has been type examined and conforms to EU Measuring Instrument Directive (MID).

The approval is for:

- Class 1 and Class 2 accuracy (calibration option)
- Environmental class T50 for water temperatures of 0.1 to 50 °C (32.18 to 122 °F)
- Electromagnetic Environment E2 (10 V/m)
- Any pipe orientation
- 0 Diameters upstream pipe
- 0 Diameters downstream pipe
- Integral or remote transmitter (<200 m [<656 ft.] cable)
- DN40 to DN300 (1½ to 12 in. NB), bi-directional flow

The OIML R49-1 certificate of conformity is available from:

http://www.abb.com/product/seitp330/86a2f24a4eab24c9c12577fb004f57fe.aspx

AquaMaster is also approved under the EU Measuring Instruments Directive (MID) 2004/22/EC, that covers putting into use water flowmeters for certain applications. MID AquaMaster3 is secured against tamping and is available as an option, along with fingerprinting for CalMaster2 in situ verification product, with certificate printout to ±1 % accuracy.

AquaMaster certificates of EC type-examination of a measuring instrument are available from:

http://www.abb.com/product/seitp330/86a2f24a4eab24c9c12577fb004f57fe.aspx

Superior control through advanced sensor design

The innovative, reduced-bore sensor design improves flow profile and reduces up- and down-stream piping requirements for the most commonly used sizes of 40 to 300 mm (1½ to 12 in.). This reduced-bore meter allows for very impressive results in the most difficult of installation requirements. This range of sensor allows the user to reduce the required Upstream and Downstream pipe requirements to 0 x DN Up and 0 x DN Down.

The content below is the extract from OIML R49 test requirements:

6.8 Flow disturbance tests (R 49-1, 5.3.4)

6.8.1 Object of tests

To verify that the meter complies with the requirements of 5.3.4 in R 49-1 for forward flow and where appropriate for reverse flow (see R 49-1, 3.2.5).

Note 1: The effects on the error (of indication) of a water meter of the presence of specified, common types of disturbed flow upstream and downstream of the meter are measured.

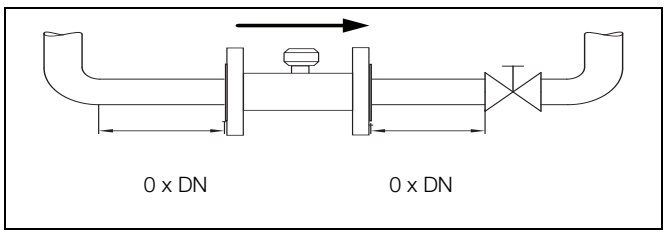

Recommended upstream / downstream conditions

Note 2: Types 1 and 2 disturbance devices are used in the tests to create left-handed (sinistrorsal) and right-handed (dextrorsal), rotational velocity fields (swirl), respectively. The flow disturbance is of a type usually found downstream of two 90° bends directly connected at right angles. A type 3 disturbance device creates an asymmetric velocity profile usually found downstream of a protruding pipe joint, single bend, or a gate valve not fully opened.

Specification

AquaMaster3 specification to OIML R49 Class 1

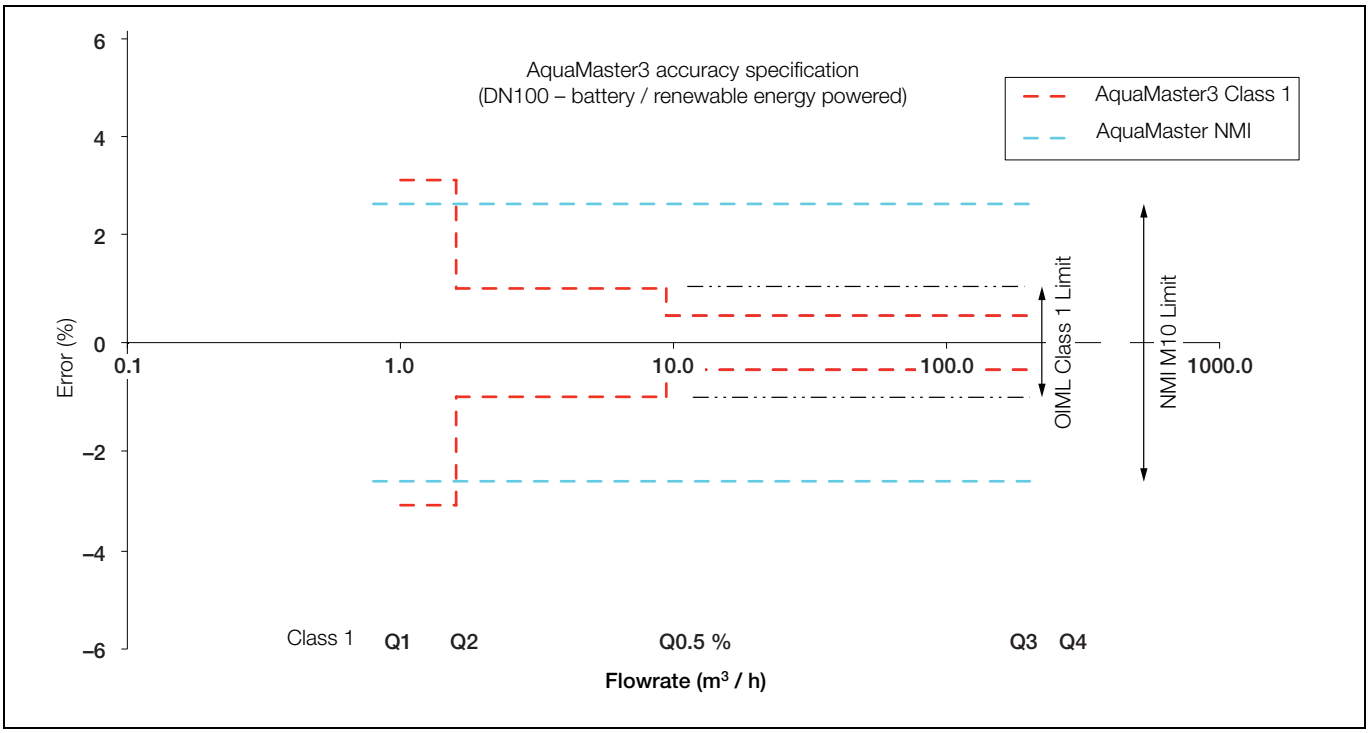

AquaMaster3 specification to OIML R49 Class 1 and NMI M10

AquaMaster3 specification to OIML R49 Class 2

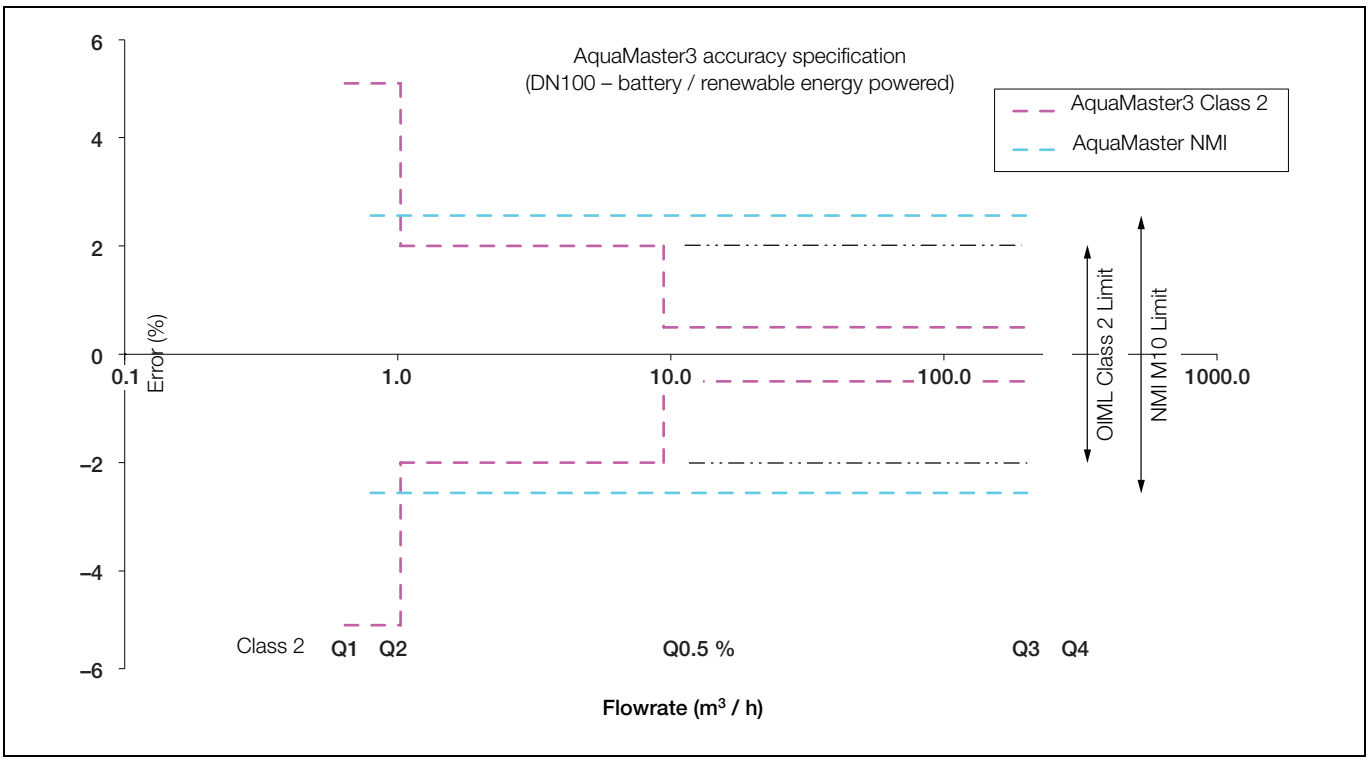

AquaMaster3 specification to OIML R49 Class 2 and NMI M10

Battery- or renewable energy-powered reduced-bore meters (FER) – flow specifications

					Class 2 specification			Class 1 specification		
Size		Q_4	Q_3	$Q_{(0.5\%)}$	Q_2	Q_1	R	Q_2	Q_1	R
mm	in.	m^3 / h (Ugal / min)	m^3 / h (Ugal / min)	m^3 / h (Ugal / min)	m^3 / h (Ugal / min)	m^3 / h (Ugal / min)		m^3 / h (Ugal / min)	m^3 / h (Ugal / min)	
15	1/2	5.0 (22.01)	4.0 (17.61)	0.24 (1.05)	0.026 (0.110)	0.016 (0.070)	250	0.04 (0.176)	0.025 (0.11)	160
20	3/4	7.9 (34.8)	6.3 (27.74)	0.37 (1.62)	0.04 (0.176)	0.025 (0.110)	250	0.063 (0.277)	0.04 (0.176)	160
25	1	12.5 (55)	10 (44)	0.6 (2.64)	0.064 (0.281)	0.04 (0.176)	250	0.1 (0.44)	0.063 (0.277)	160
40*	1 1/2	31 (138)	25 (110)	1.5 (6.6)	0.16 (0.704)	0.1 (0.44)	250	0.25 (1.10)	0.16 (0.704)	160
50*	2	50 (220)	40 (176)	2.4 (10.56)	0.26 (1.14)	0.16 (0.70)	250	0.4 (1.76)	0.25 (1.10)	160
65	2 1/2	79 (347)	63 (277)	3.7 (16.29)	0.40 (1.76)	0.25 (1.10)	250	0.63 (2.77)	0.4 (1.76)	160
80*	3	125 (550)	100 (440)	5.9 (25.97)	0.64 (2.82)	0.4 (1.76)	250	1.0 (4.40)	0.63 (2.77)	160
100*	4	200 (880)	160 (704)	9.4 (41.38)	1.0 (4.4)	0.64 (2.82)	250	1.6 (7.04)	1.0 (4.40)	160
125	5	200 (880)	160 (704)	9.4 (41.38)	1.0 (4.4)	0.64 (2.82)	250	1.6 (7.04)	1.0 (4.40)	160
150*	6	500 (2200)	400 (1760)	23.5 (103.46)	2.56 (11.27)	1.6 (7.04)	250	4.0 (17.61)	2.5 (11.01)	160
200*	8	788 (3470)	630 (2770)	37 (162.90)	4.0 (17.61)	2.5 (11.01)	250	6.3 (27.74)	3.9 (17.17)	160
250*	10	1250 (5500)	1000 (4400)	60 (260)	6.4 (28.18)	4.0 (17.61)	250	10 (44)	6.3 (27.74)	160
300*	12	2000 (8810)	1600 (7045)	90 (400)	10.2 (44.91)	6.4 (28.18)	250	16 (70.44)	10 (44)	160
350	14	2000 (8810)	1600 (7045)	110 (484.3)	16 (70.44)	10 (44.02)	160	41 (180.5)	25 (110)	63
375	15	2000 (8810)	1600 (7045)	110 (484.3)	16 (70.44)	10 (44.02)	160	41 (180.5)	25 (110)	63
400	16	3125 (13760)	2500 (11007)	170 (750)	25 (110)	15.6 (68.68)	160	63 (277.4)	40 (176)	63
450	18	3125 (13760)	2500 (11007)	170 (750)	25 (110)	15.6 (68.68)	160	63 (277.4)	40 (176)	63
500	20	5000 (22014)	4000 (17610)	270 (1190)	40 (176)	25 (110)	160	100 (440)	63.5 (279)	63
600	24	7875 (34670)	6300 (27740)	420 (1850)	63 (277)	39 (172)	160	160 (704)	100 (440)	63

* OIML R49 version available to Class 1 and Class 2

Note. OIML R49–1 allows Class 1 only for meters with $Q_3 \geq 100$ m^3 / h. Meters outside this range were tested to Class 1 accuracy and passed.

Battery- or renewable energy-powered full-bore meters (FEF) – flow specifications

					Class 2 specification			Class 1 specification		
Size		Q_4	Q_3	$Q_{(0.5\%)}$	Q_2	Q_1	R	Q_2	Q_1	R
mm	in.	m^3 / h (Ugal / min)	m^3 / h (Ugal / min)	m^3 / h (Ugal / min)	m^3 / h (Ugal / min)	m^3 / h (Ugal / min)		m^3 / h (Ugal / min)	m^3 / h (Ugal / min)	
250	10	2000 (8810)	1600 (7045)	107 (471)	16 (70.45)	10 (44)	160	26 (114)	16 (70.45)	100
300	12	3125 (13760)	2500 (11007)	167 (735)	25 (110)	15.6 (68.68)	160	40 (176)	25 (110)	100
350	14	5000 (22014)	4000 (17610)	267 (1175)	40 (176)	25 (110)	160	64 (282)	40 (176)	100
375	15	5000 (22014)	4000 (17610)	267 (1175)	40 (176)	25 (110)	160	64 (282)	40 (176)	100
400	16	5000 (22014)	4000 (17610)	267 (1175)	40 (176)	25 (110)	160	64 (282)	40 (176)	100
450	18	7875 (34670)	6300 (27740)	420 (1850)	63 (277)	39 (172)	160	101 (445)	63 (277)	100
500	20	7875 (34670)	6300 (27740)	420 (1850)	63 (277)	39 (172)	160	101 (445)	63 (277)	100
600	24	12500 (55030)	10000 (44030)	667 (2937)	100 (440)	63 (277)	160	160 (704)	100 (440)	100

Battery- or renewable energy-powered optimized full-bore meters (FEV) – flow specifications

					Class 2 specification			Class 1 specification			NMI M10 Class 2.5	
Size		Q_4	Q_3	$Q_{(0.5\%)}$	Q_2	Q_1	R	Q_2	Q_1	R	Q_1	R
mm	in.	m^3 / h (Ugal / min)	m^3 / h (Ugal / min)	m^3 / h (Ugal / min)	m^3 / h (Ugal / min)	m^3 / h (Ugal / min)		m^3 / h (Ugal / min)	m^3 / h (Ugal / min)		m^3 / h (Ugal / min)	
40	1 1/2	50 (220)	40 (176)	2.7 (11.89)	0.4 (1.76)	0.25 (1.10)	160	0.64 (2.82)	0.4 (1.76)	100	0.32 (1.41)	125
50	2	79 (347)	63 (277)	4.2 (18.5)	0.63 (2.77)	0.39 (1.72)	160	1.0 (4.40)	0.63 (2.77)	100	0.50 (2.20)	125
65	2 1/2	125 (550)	100 (440)	6.7 (29.5)	1.0 (4.40)	0.6 (2.64)	160	1.6 (7.04)	1.0 (4.40)	100		
80	3	200 (880)	160 (704)	10.7 (47.11)	1.6 (7.04)	1.0 (4.40)	160	2.6 (11.45)	1.6 (7.04)	100	1.28 (5.64)	125
100	4	313 (1378)	250 (1100)	16.7 (73.53)	2.5 (11.01)	1.6 (7.04)	160	4.0 (17.61)	2.5 (11.01)	100	2.0 (8.81)	125
125	5	313 (1378)	250 (1100)	16.7 (73.53)	2.5 (11.01)	1.6 (7.04)	160	4.0 (17.61)	2.5 (11.01)	100		
150	6	788 (3470)	630 (2774)	42 (185)	6.3 (27.74)	3.9 (17.17)	160	10 (44)	6.3 (27.74)	100	5.0 (22.01)	125
200	8	1250 (5504)	1000 (4403)	67 (2985)	10 (44)	6.0 (26.42)	160	16 (70.45)	10 (44)	100	8.0 (35.22)	125

AC-powered reduced-bore meters (FER) – flow specifications

Size		Q_4	Q_3	$Q_{(0.25\%)}$	Class 2 specification			Class 1 specification		
					Q_2	Q_1	R	Q_2	Q_1	R
mm	in.	m^3 / h (Ugal / min)	m^3 / h (Ugal / min)	m^3 / h (Ugal / min)	m^3 / h (Ugal / min)	m^3 / h (Ugal / min)		m^3 / h (Ugal / min)	m^3 / h (Ugal / min)	
15	1/2	5 (22)	4 (18)	0.11 (0.48)	0.010 (0.044)	0.006 (0.026)	630	0.016 (0.070)	0.010 (0.04)	400
20	3/4	7.9 (35)	6.3 (27.74)	0.18 (0.79)	0.016 (0.070)	0.010 (0.044)	630	0.025 (0.11)	0.016 (0.070)	400
25	1	12.5 (55)	10 (44)	0.29 (1.27)	0.025 (0.11)	0.016 (0.070)	630	0.04 (0.176)	0.025 (0.11)	400
40*	1 1/2	31 (138)	25 (110)	1.5 (6.6)	0.063 (0.28)	0.040 (0.176)	630	0.1 (0.44)	0.063 (0.28)	400
50*	2	50 (220)	40 (176)	1.5 (6.6)	0.1 (0.44)	0.063 (0.277)	630	0.16 (0.70)	0.1 (0.44)	400
65	2 1/2	79 (247)	63 (277)	3 (13.2)	0.16 (0.7)	0.1 (0.44)	630	0.25 (1.10)	0.16 (0.70)	400
80*	3	125 (550)	100 (440)	3 (13.2)	0.3 (1.32)	0.16 (0.70)	630	0.4 (1.76)	0.25 (1.10)	400
100*	4	200 (880)	160 (704)	4.6 (20.25)	0.41 (1.8)	0.25 (1.10)	630	0.64 (2.82)	0.4 (1.76)	400
125	5	200 (880)	160 (704)	4.6 (20.25)	0.41 (1.8)	0.25 (1.10)	630	0.64 (2.82)	0.4 (1.76)	400
150*	6	500 (2200)	400 (1760)	11.4 (50.19)	1.0 (4.40)	0.63 (2.77)	630	1.6 (7.04)	1.0 (4.40)	400
200*	8	788 (3470)	630 (2774)	18 (79.25)	1.6 (7.04)	1.0 (4.40)	630	2.5 (11.01)	1.6 (7.04)	400
250*	10	1250 (5504)	1000 (4400)	29 (127.7)	2.5 (11.01)	1.6 (7.04)	630	4.0 (17.61)	2.5 (11.01)	400
300*	12	2000 (8806)	1600 (7045)	46 (202)	4.1 (18.05)	2.5 (11.01)	630	6.4 (28.18)	4.0 (17.61)	400
350	14	2000 (8806)	1600 (7045)	80 (352)	6.4 (28.18)	4.0 (17.61)	400	12.8 (56.35)	8.0 (35.22)	200
375	15	2000 (8806)	1600 (7045)	80 (352)	6.4 (28.18)	4.0 (17.61)	400	12.8 (56.35)	8.0 (35.22)	200
400	16	3125 (13760)	2500 (11007)	125 (550)	10 (44)	6.3 (27.74)	400	20 (88.06)	12.5 (55.04)	200
450	18	3125 (13760)	2500 (11007)	125 (550)	10 (44)	6.3 (27.74)	400	20 (88.06)	12.5 (55.04)	200
500	20	5000 (22014)	4000 (17610)	200 (880)	16 (70.45)	10 (44)	400	32 (140.9)	20 (88.05)	200
600	24	7875 (34670)	6300 (27740)	315 (1387)	25.2 (110.9)	15.8 (69.56)	400	50.4 (221.9)	31.5 (138.7)	200

* OIML R49 version available to Class 1 and Class 2

Note. OIML R49–1 allow Class 1 only for meters with $Q_3 \geq 100$ m^3 / h. Meters outside this range were tested to Class 1 accuracy and passed.

AC-powered full-bore meters (FEF) – flow specifications

Size		Q_4	Q_3	$Q_{(0.25\%)}$	Class 2 specification			Class 1 specification		
					Q_2	Q_1	R	Q_2	Q_1	R
mm	in.	m^3 / h (Ugal / min)	m^3 / h (Ugal / min)	m^3 / h (Ugal / min)	m^3 / h (Ugal / min)	m^3 / h (Ugal / min)		m^3 / h (Ugal / min)	m^3 / h (Ugal / min)	
250	10	2000 (8806)	1600 (7045)	160 (704)	8.1 (35.66)	5.1 (22.45)	315	13 (57.24)	8 (35.22)	200
300	12	3125 (13760)	2500 (11007)	250 (1100)	12.7 (55.92)	7.9 (34.78)	315	20 (88.06)	12.5 (55.04)	200
350	14	5000 (22014)	4000 (17610)	400 (1761)	20.3 (89.38)	12.7 (55.92)	315	32 (140.9)	20 (88.06)	200
375	15	5000 (22014)	4000 (17610)	400 (1761)	20.3 (89.38)	12.7 (55.92)	315	32 (140.9)	20 (88.06)	200
400	16	5000 (22014)	4000 (17610)	400 (1761)	20.3 (89.38)	12.7 (55.92)	315	32 (140.9)	20 (88.06)	200
450	18	7875 (34670)	6300 (27740)	630 (2774)	32 (140.9)	20 (88.06)	315	50 (220.1)	32 (140.9)	200
500	20	7875 (34670)	6300 (27740)	630 (2774)	32 (140.9)	20 (88.06)	315	50 (220.1)	32 (140.9)	200
600	24	12500 (55030)	10000 (44030)	1000 (4400)	51 (224.5)	32 (140.9)	315	80 (220.1)	50 (220.1)	200

AC-powered optimized full-bore meters (FEV) – flow specifications

Size		Q_4	Q_3	$Q_{(0.25\%)}$	Class 2 specification			Class 1 specification			NMI M10 Class 2.5	
					Q_2	Q_1	R	Q_2	Q_1	R	Q_1	R
mm	in.	m^3 / h (Ugal / min)	m^3 / h (Ugal / min)	m^3 / h (Ugal / min)	m^3 / h (Ugal / min)	m^3 / h (Ugal / min)		m^3 / h (Ugal / min)	m^3 / h (Ugal / min)		m^3 / h (Ugal / min)	
40	1 1/2	50 (220)	40 (176)	4 (17.61)	0.2 (0.88)	0.13 (0.57)	315	0.32 (1.41)	0.20 (0.88)	200	0.16 (0.70)	250
50	2	79 (348)	63 (277)	6.3 (27.74)	0.32 (1.41)	0.20 (0.88)	315	0.50 (2.20)	0.32 (1.41)	200	0.25 (1.10)	250
65	2 1/2	125 (550)	100 (440)	10 (44)	0.50 (2.20)	0.32 (1.41)	315	0.80 (3.52)	0.50 (2.20)	200		
80	3	200 (880)	160 (704)	16 (70.45)	0.81 (3.57)	0.51 (2.25)	315	1.30 (5.72)	0.80 (3.52)	200	0.6 (2.64)	250
100	4	313 (1378)	250 (1100)	25 (110)	1.30 (5.72)	0.79 (3.48)	315	2.0 (8.81)	1.25 (5.50)	200	1.0 (4.40)	250
125	5	313 (1378)	250 (1100)	25 (110)	1.30 (5.72)	0.79 (3.48)	315	2.0 (8.81)	1.25 (5.50)	200		
150	6	788 (3470)	630 (2774)	63 (277)	3.2 (14.09)	2.0 (8.81)	315	5.0 (22.01)	3.2 (14.09)	200	2.52 (11.1)	250
200	8	1250 (5504)	1000 (4403)	100 (440)	5.10 (22.45)	3.2 (14.09)	315	8.0 (35.22)	5.0 (22.01)	200	4.0 (17.61)	250

Specification – FER, FEF and FEV sensors

Wetted materials

Screw-end meters
Brass and stainless steel 316L and super-austenitic steel

Flanged meters
Electrodes – stainless steel 316L

Potable water approvals

	WRAS Listed	NSF Approved	ACS	AS / NZS 4020
FER	✔	✘	✔ (DN40 to 600 only)	✔
FEF	✔	✔	✔	✔
FEV	✔	✔	✔	✔

Pressure limitations
As flange rating

PN25 Max Process Temp 50 °C (122 °F)

PN40 Max Process Temp 40 °C (104 °F)

OIML / MID Approved Meters 16 bar (232 psi)

Pressure equipment directive 97/23/EC
This product is applicable in networks for the supply, distribution and discharge of water and associated equipment and is therefore exempt.

Environmental protection
Rating

IP68 (NEMA 6P) to 10 m (33 ft.)

Buriable (mechanical limitation, sensor only) to 5 m (16 ft.)

Paint specification

Housing body and flange
Carbon steel coated with light grey 2-pack epoxy (RAL9002)

- Primer – Interpon PZ660 zinc-based system, 70 microns thick
- Top coat – Interpon 610 light grey polyester powder coating (RAL 9002), up to 150 microns thick
- As a special requirement – 2-pack epoxy primer / finish @ 300µm DFT

Temperature limitations

Ambient temperature
Remote transmitter:

–20 to 70 ° C (–4 to 158 °F)

Close-coupled or integral transmitter:

–20 to 60 ° C (–4 to 140 °F)

Process temperature
Non-approved:

–6 to 70 ° C (21 to 158 °F)

OIML R49 T50 approval:

0.1 to 50 ° C (32 to 122 °F)

Conductivity
>50 µS/cm

End connections

Thread-end connections (FER)
15 mm – ISO 228 G 3/4 in. B 3/4 in. NPSM, 40 bar (580 psi)

20 mm – ISO 228 G 1 in. B 1 in. NPSM, 40 bar (580 psi)

25 mm – ISO 228 G 1 1/4 in. B 1 1/4 in. NPSM, 40 bar (580 psi)

40 to 300 mm (1.5 to 12 in.) flanged (FER)
EN1092-1 / ISO 7005 – PN10, PN16

ANSI B16.5 Class 150

AS 2129 Tables C, D, E and F

AS 4087 PN14, PN16, PN21

JIS to BS2210, 10k

350 to 600 mm (14 to 24 in.) flanged (FER)
EN1092-1 / ISO 7005 – PN10, PN16

AS 4087 PN14, PN16, PN21

AS 2129 Tables C, D

JIS to B2210 5k and 10k

25 to 300 mm (1 to 12 in.) flanged (FEF)
EN1092-1 / ISO 7005 – PN10, PN16

ANSI B16.5 Class 150

AS 4087, PN16

Pipe conditions

FEF	5 x pipe dia.	2 x pipe dia.
FEV	5 x pipe dia.	0 x pipe dia.
FER	0 x pipe dia. minimum	0 x pipe dia. minimum

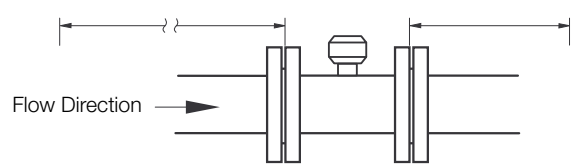

Pressure loss

	Flow Rate	Pressure Loss in bar (psi)
FER	Q_3	<0.63 (9.1)
	Q_3 / 2	<0.16 (2.3)
FEV	Q_3	<0.25 (3.6)
FEF	Q_3	Negligible

OIML R49 approval (FER only)

Size range and flow specification
See specification table

Accuracy class
1 and 2

Environmental class
T50 0.1 °C to 50 °C (32.18 °F to 122 °F)

Pressure loss class
< 0.63 bar

Minimum upstream and downstream pipe
0 D

Orientation
Any

MID Approval
Approved to directive 2004/22/EC

Specification – AquaMaster3 transmitter

Mounting
Integral with sensor (integral-mount)

or

Remote up to 200 m (650 ft)

Housing
IP68 (NEMA 6P), <2 m (6 ft.)

Stainless steel housing in a thermoplastic outer cover with window, encapsulated with polyurethane-based resin.

Electrical connections
IP68 plug and socket, mains cable

Sensor cable
ABB cable supplied as standard

SWA cable available (via adaptor box) on application

Mains supply
85 to 265 V AC @ <3 VA

Connection cable: approx. 3 m (10 ft.)

Mains power failure backup time: Standard, approx. 5 days from internal super capacitor. Optional, up to 5 years with power cable option AS and external battery option AD

Renewable power
Solar or wind

Input voltage: 6 to 22 V DC @ <5 W

Note. Renewable energy generators do not operate at maximum capacity, for example, low wind speed, coating of the solar panel, short daylight periods. As a consequence, some installations require generators with a capacity greater than the specified 5 W minimum.

Max. current: 200 mA

Backup power time up to 3 weeks
(dependent on operating conditions)

External battery pack
IP68 (NEMA 6P)

Manganese alkaline battery life @ 0 to 45 °C (32 to 113 °F): Nominal 5 years (standard) / 10 years (optional) operation *

Lithium battery pack with 10-year life (optional)

Internal battery (integral-mount version only)
IP68 (NEMA 6P) sensor integral housing

Standard lithium thionyl chloride 3.6 V D-cell (x 6)
battery life @ –20 to 60 °C (–4 to 140 °F):
Nominal 6 years operation*
Suitable batteries, non-solder tag (not supplied):

SAFT LS36600 / Tadiran TL-5930 /
Varta ER D / Tekcell SB-D02

Battery changeover backup time
Approximately 2 minutes

Pulse and alarm outputs
Three, bidirectional, solid-state switches with common isolation

±35 V DC 50mA

Output 1 – forward only or forward plus reverse pulses

Output 2 – reverse pulses or direction indicator

Output 3 – alarm indicates any problem with measurement or with power

Pulse output – 50 Hz maximum, 50 % nominal duty cycle

Communications options
Serial data communications

Local Port RS232

Note. On battery and renewable energy versions frequent use of the RS232 or RS485 port considerably reduces battery / standby life.

RS485 MODBUS

MODBUS RTU slave

Baud rates:

1200, 2400, 4800, 9600 or 19200

RS485:

2-wire + ground signalling
Low power shut-off mode after 10 s of inactivity

Encoder interface / scancoder / scanreader (non-logging versions only)
Function – remote reading of totalizer and serial number

Connections:

2-wire for inductive pads
(max. cable length 80 m [260 ft])

3-wire for AMR

Compatible readers:

Severn Trent Services Smart reader

ABB or Elster SR100 and SR50

Logicon Versaprobe

Itron ERT

Compatible inductive pads:

Starpad

*Battery life is shorter with GSM, depending on how frequently it is used and for what period. For example, used once per day for SMS automated reporting of data logged at 15 minute intervals, the life of a battery pack would be typically reduced by 5 %. Battery life is shorter at extremes of temperature.

Telemetry applications (option)

GSM / SMS modem

Mounting:

Internal

Frequency bands:

Quad band: 850 / 900 / 1800 / 1900 MHz

Functions:

SMS auto report of flow and optionally, pressure logger data (typically 1 s or 1 min. average)

SMS report frequency: typically daily

SMS alarm reporting at time of event, for example power loss, limited to 1 per day

SMS flowmeter configuration

SMS flowmeter diagnosis

SMS total / tariff auto report

GSM antenna (option)

Quad band operation:

850 / 900 / 1800 / 1900 MHz

Mounting:

Integral with transmitter or remote.

Antenna environmental:

IP66 (NEMA4) waterproof for accidental submersion

Note. The GSM does not operate with integral antenna under water.

General advice is to mount the antenna as high as possible, always outside of any metal enclosure and not under the surface of the ground.

Temperature ranges

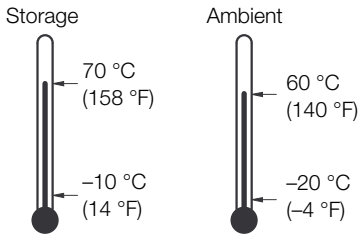

Battery capacity and life are shortened when operating outside the temperature range:

Manganese Alkaline 0 to 45 °C (32 to 113 °F)

Lithium Thionyl Chloride 0 to 60 °C (32 to 140 °F)

Response time (programmable)

Minimum

1 s (mains-powered)

15 s (battery-powered + external renewable energy)

Device languages

English	French	German
Spanish	Italian	Dutch

Pressure system – external transducer (option)

Pressure range

16 bar Abs.

Connection

Standard quick-fit male probe connector via an adapter cable

Operating temperature range

–20 (ambient) to 70 °C (–4 to 158 °F)

Protect the sample and transducer from freezing.

Accuracy (typical)

±0.4 % of range

Thermal error band (typically 100 °C [212 °F])

±1.5 % span

Cable length

5, 10 or 20 m (16, 33 or 66 ft)

Logger details (option)

	Logger		
	1	2	3
Logger Function	**Flow & Pressure**	**Flow & Pressure**	**Forward, Reverse, Tariffs & Net Flow Totals**
No. of Records	8831	11361	732
Logging Interval	15 to 65500 s (adjustable)		24 hour (fixed)
Typical Capacity	3 months @15 min	7 days (approx.) @ 1 min	2 years

Software availability

Software	Direct RS232	SMS (Text)
ABB AC800M	✘	✔
ABB Generic (for example, LogMaster)	✔	✘
Areal (Topkapi)	✘	✔
MeterVue (I&P AutoChart)	✘	✔
EcoTech	✘	✔
HydroComp	✘	✔
Mobile phone text	✘	✔
OSI PI Database or Capula	✔	✘
QTech	✘	✔
Zeepaard	✘	✔
Agua Ambiente Servicios Integrales SA	✘	✔

Transmitter connections

Transmitter connection overview

This section is intended to give an overview of installation of a flowmeter. For Installation requirements, technical information and Health and safety precautions – refer to the User Guide OI/FET200–EN.

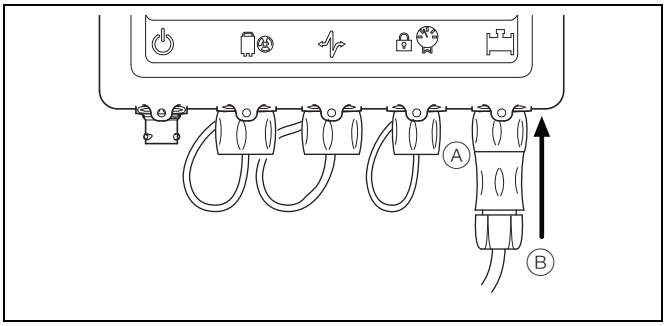

Remote or close-coupled sensor connections

Connection of the sensor cable (B) to the transmitter is made via a military-style connector. This can be installed by simply removing the screwed cap (A), and gently pushing the sensor connector (B) into the socket, rotating it until it engages then tightening the locking ring.

Input / output connections

Frequency outputs

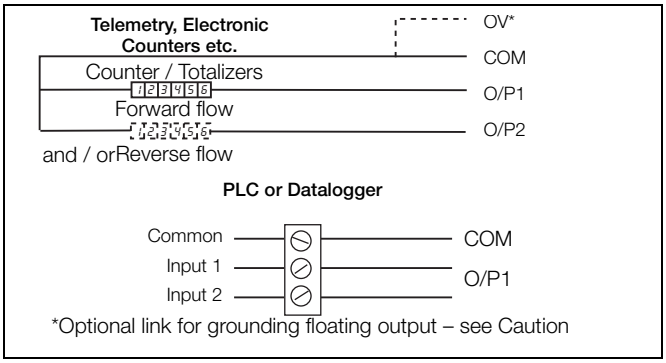

Frequency output connections

Note. Outputs 1 and 2 are not polarity-sensitive. The common connection for these outputs is designated 'COM'.

Alarm interface

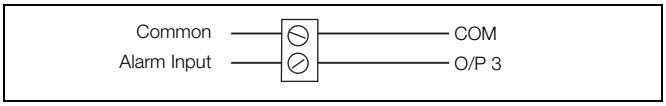

Alarm output connections

Note. Output 3 is not polarity sensitive. The common connection for these outputs is designated 'COM'.

Input / Output Connections

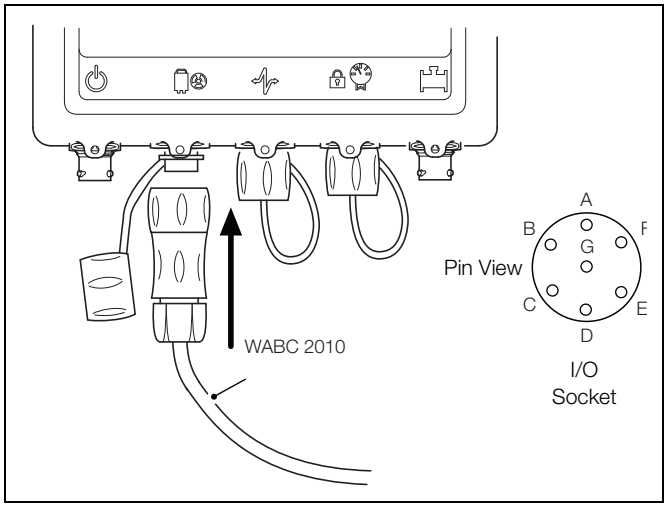

Input / Output connections

Pin	Signal	Function	Color (Output Cable)
A	Not used	Not used	Violet
B	DATA	ScanReader Data	Blue
C	O/P COM	Output Common	Yellow
D	O/P2	Reverse Pulses or Direction Indicator	Red
E	O/P3	Alarm Output	Brown
F	O/P1	Forward Pulses or Forward & Reverse Pulses	Orange
G	0V	Scanreader 0V	Screen

Connector input / output connections

ScanReader interface (option)

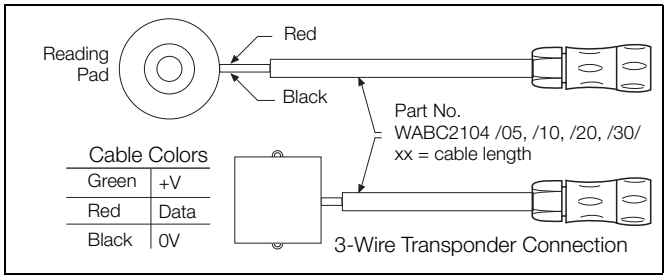

ScanReader connections

RS232 local computer connection

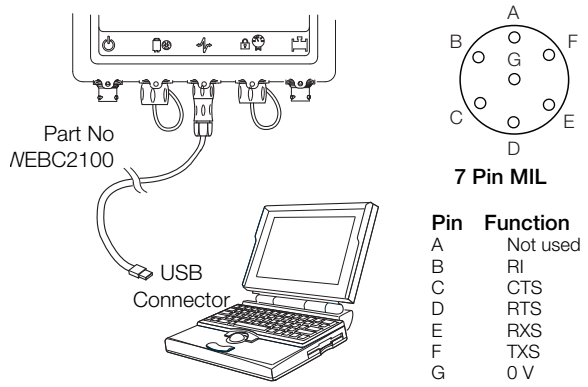

RS232 local computer connections

Note.

- A USB Comms lead driver is required when using WEBC2100 – download from www.ftdichip.com/FTDrivers.htm
- On battery or renewable energy versions, do not leave an RS232 connection plugged in or wired with voltages applied unnecessarily. Such voltages result in far higher power consumption from the battery or backup source, limiting battery / backup life.
- The serial port connection shares the same physical port as the MODBUS connection so (depending on cable design) it may be necessary to disconnect the MODBUS connection temporarily to enable configuration of AquaMaster3.

Digital communication

MODBUS protocol

MODBUS is an open standard that is owned and administered by an independent group of device manufacturers called the Modbus Organization (www.modbus.org).

Using the MODBUS protocol, devices from different manufacturers exchange information on the same communications bus without the need for special interface equipment. AquaMaster FET2XX-MB follows the specification for Modbus Over Serial Line V1.02, using 2-wire TIA/EIA-485 (RS485) physical layer.

Please refer to:

- MODBUS Tables Supplement (COI/FET2XX/MOD/TBL–EN)
- Programming Guide (COI/FET2XX–EN)

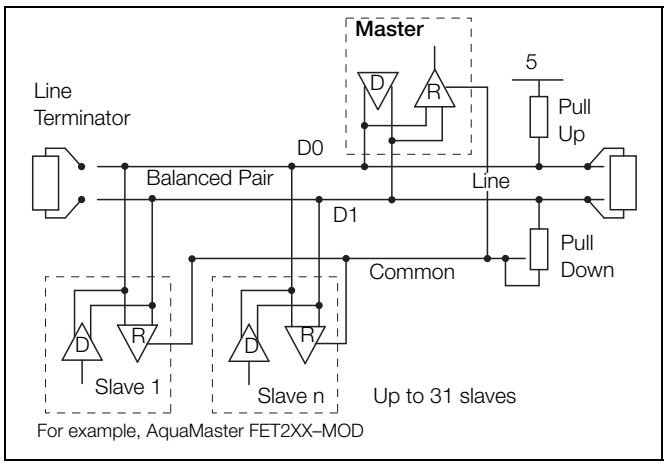

Typical MODBUS RS485 2-wire network Installation

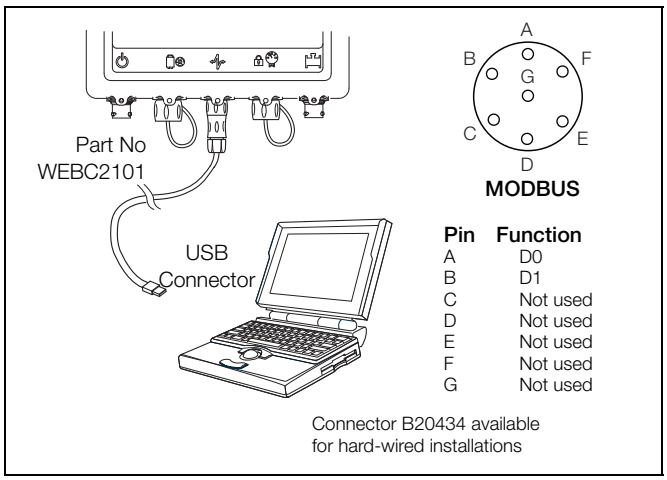

MODBUS connection

Cable properties

The end-to-end length of the trunk cable must be limited. The maximum length depends on the Baud rate, the cable (gauge, capacitance or characteristic impedance), the number of loads on the daisy chain and the network configuration (2-wire or 4-wire).

For 9600 Baud rate and AWG26 (or wider) gauge, the maximum length is 1000 m (3280 ft.). Where 4-wire cabling is used as a 2-wire cabling system the maximum length must be divided by 2. The tap cables must be short, never more than 20 m (65.6 ft.). If a multi-port tap is used with n derivations, each one must have a maximum length of 40 m (131 ft.) divided by n.

The maximum serial data transmission line length for RS485 systems is 1200 m (3937 ft.). The lengths of cable that can be used are determined by the cable type, typically:

- Up to 6 m (19.7 ft.) – standard screened or twisted pair cable.
- Up to 300 m (984 ft.) – twin twisted pair with overall foil screen and an integral drain wire – for example, Belden 9502 or equivalent.
- Up to 1200 m (3937 ft.) – twin twisted pair with separate foil screens and integral drain wires – for example, Belden 9729 or equivalent.

Category 5 cables may be used for RS485-MODBUS to a maximum length of 600 m (1968 ft.). For the balanced pairs used in an RS485-system, a characteristic impedance with value higher than 100Ω is preferred especially for 19200 and higher Baud rates.

Installation requirements

This section is intended to give an overview of installation of a flowmeter. For Installation requirements, technical information and Health and Safety precautions refer to User Guide OI/FER100/FER200-EN.

Unpacking the flowmeter

Care must be taken when lifting the flowmeter to use the lifting hooks provided or sling under the body of the meter. Never lift using the terminal connection box of the sensor cable as this will cause damage and invalidate warranty.

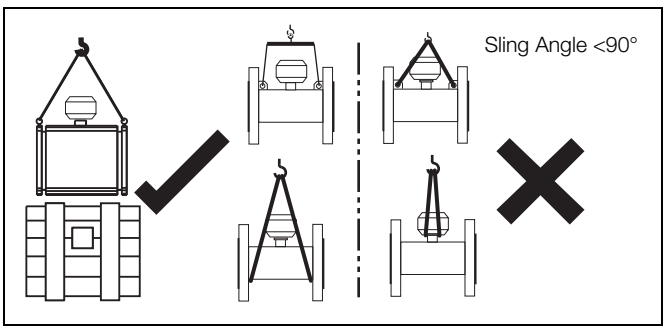

Grounding

The flowmeter sensor must be cross-bonded to the upstream and downstream pipes. For technical reasons, this potential should be identical to the potential of the metering fluid. The fluid connection is made by installing a minimum of 2 fluid contact rings.

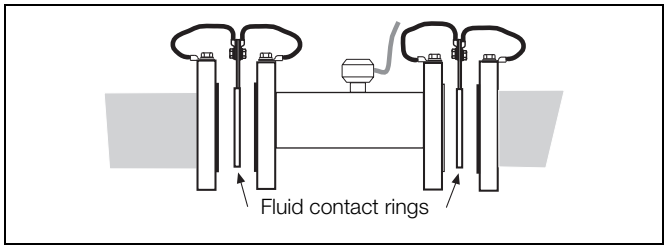

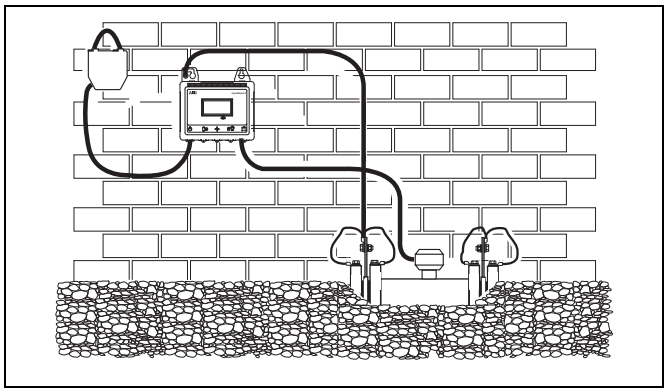

Mounting

The installation conditions shown below must be observed to achieve the best operational results.

The sensor tube must always be completely full.

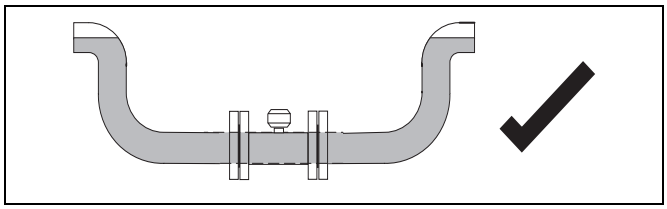

The flow direction must correspond to the identification plate. The device measures the flowrate in both directions. Forward flow is the factory setting.

The devices must be installed without mechanical tension (torsion, bending). If required support the pipeline.

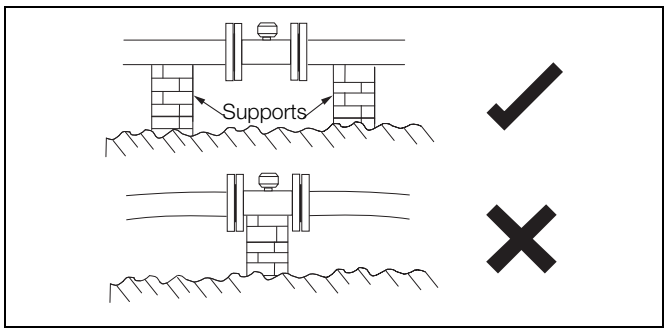

The flange seals must be made from a compatible material for the fluid and fluid temperatures if required.

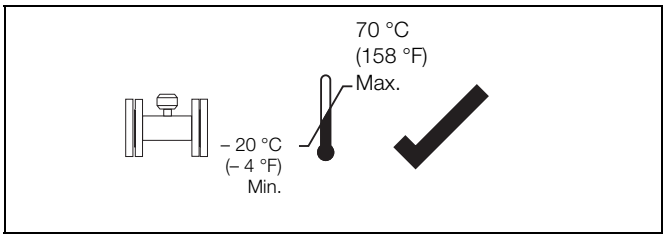

Seals must not extend into the flow area since possible turbulence could influence the device accuracy.

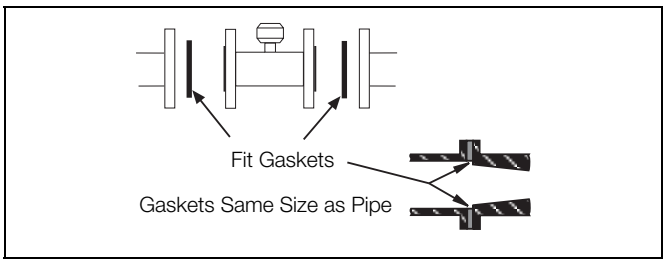

The pipeline may not exert any unallowable forces and torques on the device, such as vibration.

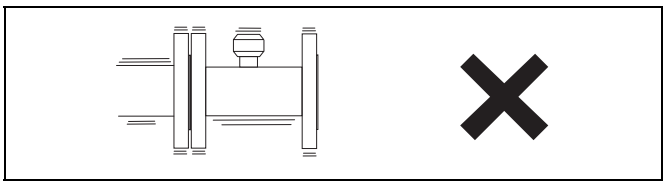

The flowmeter must not be submitted to any localized heat during installation; take care to remember this is a measuring instrument.

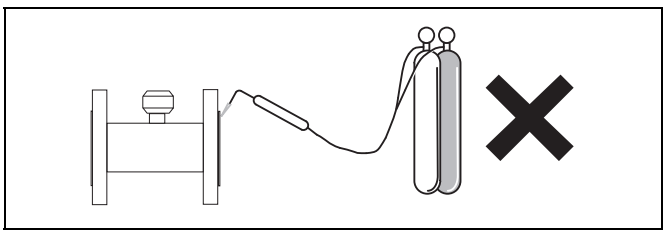

The flowmeter must not be exposed to direct sunlight or provide for appropriate sun protection where necessary.

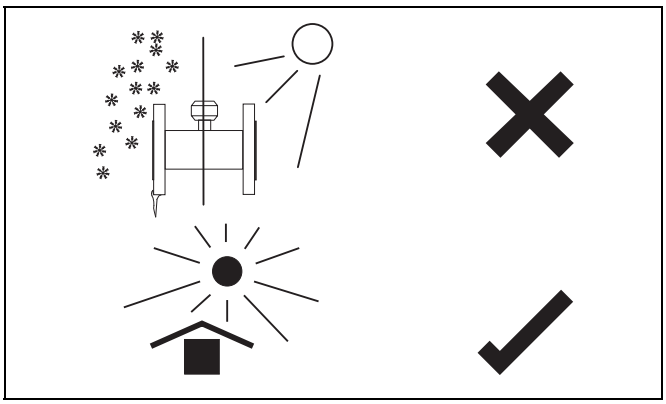

The cable to the flowmeter should be installed neatly or within a conduit, both loose or conduit should have a u shape below the terminal connection box height to allow any water run off to avoid any capillary action into the flowmeter sensor.

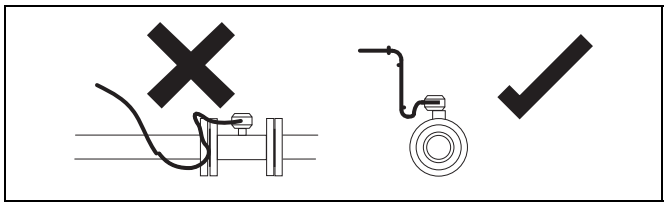

Electrode axis

Electrode axis should be horizontal if at all possible or no more than 45° from horizontal.

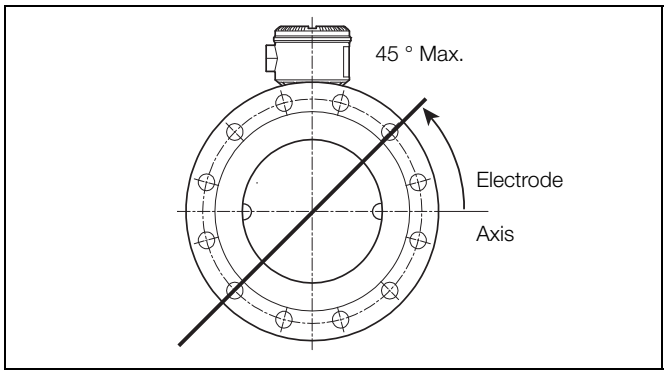

Upstream and downstream pipe sections

The metering principle is independent of the flow profile as long as swirl does not extend into the metering section, such as may occur after double elbows, in the event of tangential inflow or where half-open gate valves are located upstream of the flowmeter sensor. In such cases, best practice installation measures should be put in place to normalize the flow profile.

- Whereever possible do not install fittings (for example, manifolds, valves) directly in front of the flowmeter sensor.
- Butterfly valves should be installed so that the valve plate does not extend into the flowmeter sensor.
- Valves or other turn-off components should be installed in the Downstream pipe section.

Experience has shown that, in most installations, straight upstream sections 5 x DN long and straight downstream sections 2 x DN long are normally sufficient. We would recommend conditions of 5 x DN straight upstream and 2 x DN straight downstream where possible.

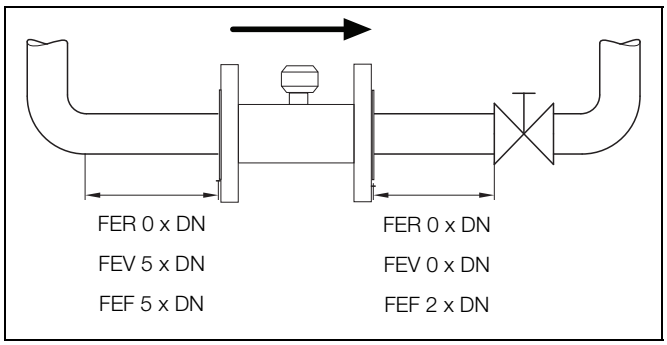

Transmitter dimensions

Remote- and sensor-mounted transmitter

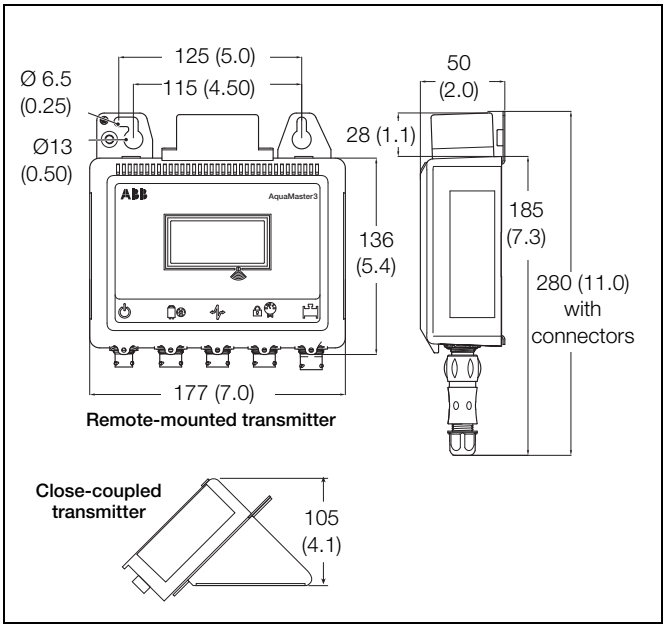

Aquamaster 3 dimensions

External battery pack

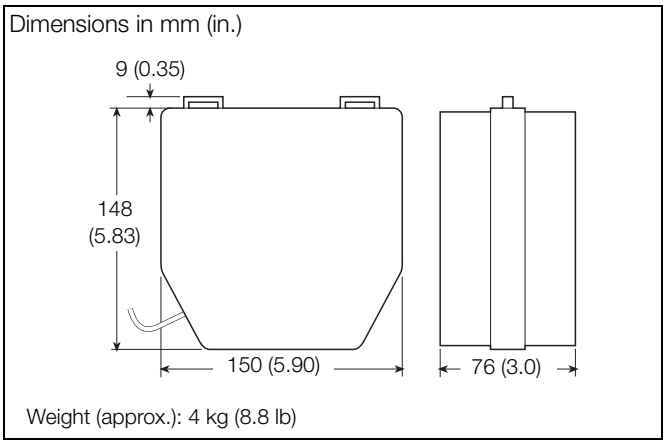

AquaMaster3 battery pack dimensions

Integral transmitter and vandal-resistant housing

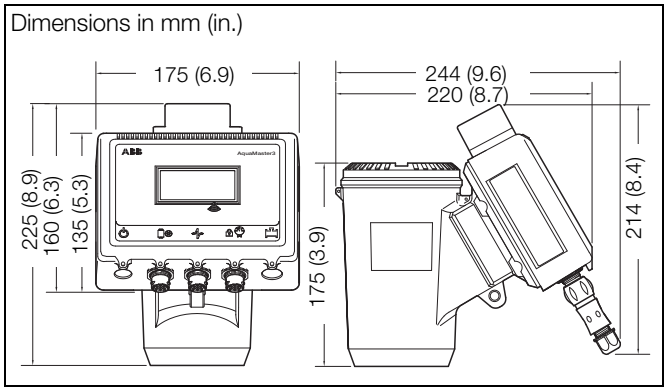

Integral transmitter dimensions

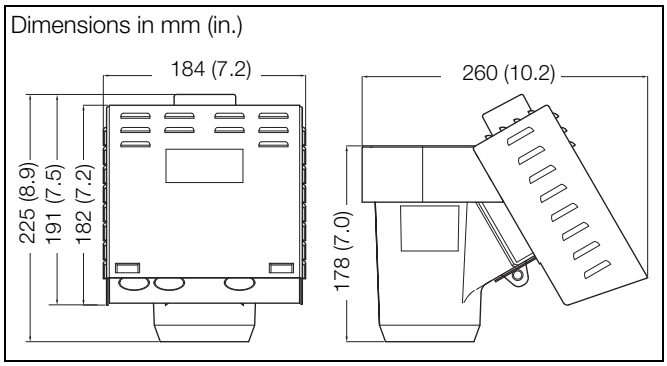

Vandal-resistant housing dimensions

Sensor dimensions

FER – DN15 to 25 (1/2 to 1in. NB) remote sensor

Dimensions in mm (in.)

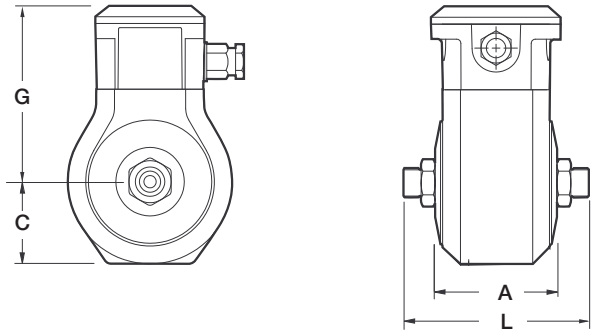

DN15 to 25 (1/2 to 1in. NB) (FER) remote sensor

		Dimensions in mm (in.)				Approx. weight in kg (lb) (Remote)
DN	**Process connection type**	**L**	**C**	**G**	**A**	
DN 15 (½ in.)	¾ in. BSP	119 (4.69)	64 (2.52)	125 (4.92)	89 (3.50)	2.5 (5.50)
	¾ in NPSM					
DN 20 (¾ in.)	1 in. BSP	127 (5.00)	64 (2.52)	125 (4.92)	89 (3.50)	
	1 in. NPSM					
DN25 (1 in.)	1 1/4 in. BSP	127 (5.00)	64 (2.52)	125 (4.92)	89 (3.50)	
	1 1/4 in. NPSM					

DN15 to 25 (1/2 to 1in. NB) (FER) remote sensor dimensions / weights

FER – DN40 to 300 (1½ to 12 in. NB) integral / remote sensor

Dimensions in mm (in.)

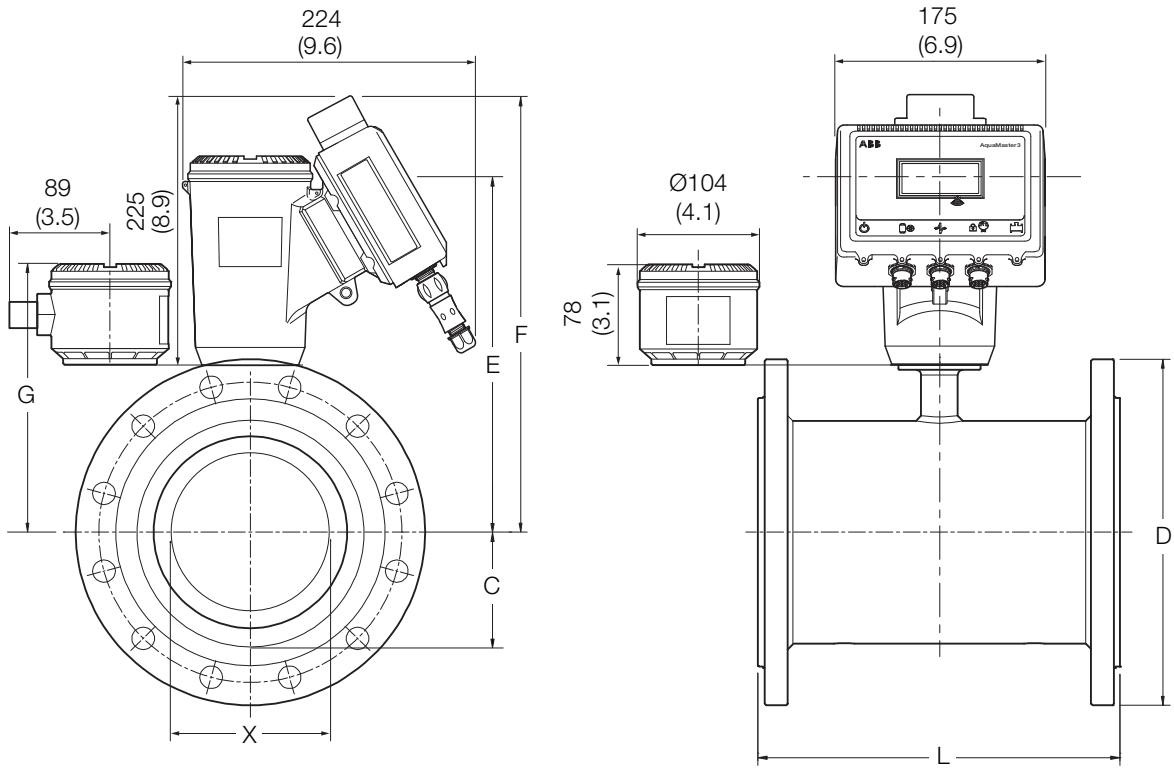

DN40 to 300 (1½ to 12 in. NB) (FER) integral / remote sensor

		Dimensions in mm (in.)						Approx. weight in kg (lb)	
DN	**Process connection type**	**D**	**L**	**F**	**E**	**G**	**X**	**Integral**	**Remote**
DN40 (1½ in.)	EN1092-1 PN10, 16, 25, 40	150 (5.91)	190 (7.48)	260 (10.24)	185 (7.28)	137 (5.39)	23.5 (0.93)	13.4 (29.5)	12.4 (27.3)
	ASME B16.5 CLASS 150								
	AS2129 TABLE D, E, F								
DN50 (2 in.)	EN1092-1 PN10, 16, 25, 40	165 (6.50)	190.5 (7.5)	261 (10.28)	186 (7.32)	138 (5.43)	29 (1.14)	14.75 (32.45)	13.75 (30.25)
	ASME B16.5 CLASS 150								
DN80 (3 in.)	EN1092-1 PN10, 16, 25, 40	200 (7.87)	190.5 (7.5)	280 (11.04)	205.5 (8.09)	157.5 (6.2)	47 (1.85)	21.2 (46.64)	20.2 (44.4)
	ASME B16.5 CLASS 150								
	AS4087 PN16, 21								
	AS2129 TABLE D, E, F								
DN100 (4 in.)	EN1092-1 PN10, 16, 25, 40	225 (8.86)	240.5 (9.47)	300.5 (11.83)	225.5 (8.88)	177.5 (6.98)	64 (2.52)	27.3 (60)	26.3 (58)
	ASME B16.5 CLASS 150								
	AS4087 PN16								
DN150 (6 in.)	EN1092-1 PN10, 16, 25, 40	300 (11.81)	290.5 (11.44)	333.5 (13.13)	258.5 (10.18)	210.5 (8.29)	100.2 (3.94)	27.3 (60)	26.3 (58)
	ASME B16.5 CLASS 150								
	AS4087 PN16								
DN200 (8 in.)	EN1092-1 PN10, 16	375 (11.76)	340.5 (13.4)	358.7 (14.12)	283.7 (11.17)	235.7 (9.28)	126.7 (5.00)	68 (150)	67 (147.4)
	ASME B16.5 CLASS 150								
	AS2129 TABLE C, D, E, F								
	AS4087 PN14, 16, 21								

AquaMaster3 integral / remote FER – DN40 to 200 (1½ to 8 in.) cast iron sensor dimensions / weights

		Dimensions in mm (in.)							Approx. weight in kg (lb)	
DN	Process connection type	D	L	F	C	E	G	X	Integral	Remote
DN40 (1½ in.)	EN1092-1 PN10, PN16, PN25, PN40	150 (5.91)	200 (7.87)	285 (11.22)	30.4 (1.20)	215 (8.46)	138 (5.43)	23.5 (0.93)	11 (24)	8 (18)
	ASME B16.5 CLASS 150	127 (5.00)								
	JIS 10K	140 (5.51)								
	AS2129 TABLE C D E	135 (5.31)								
	AS2129 TABLE F	140 (5.51)								
	AS4087 PN14	135 (5.31)								
DN50 (2 in.)	EN1092-1 PN10, 16, 25 & 40	165 (6.50)	200 (7.87)	293 (11.54)	38.3 (1.51)	223 (8.78)	146 (5.75)	29 (1.14)	12 (26)	9 (20)
	ASME B16.5 CLASS 150	152.4 (6.00)								
	JIS 10K	155 (6.10)								
	AS2129 TABLE C D E	150 (5.91)								
	AS2129 TABLE F	165 (6.50)								
	AS4087 PN14, PN16	150 (5.91)								
	AS4087 PN21	165 (6.50)								
DN65 (2½ in.)	EN1092-1 PN10, PN16, PN25, PN40	185 (7.28)	200 (7.87)	299 (11.77)	45.2 (1.78)	229 (9.02)	152 (5.98)	37 (1.46)	14 (31)	11 (24)
	ASME B16.5 CLASS 150	177.8 (7.00)								
	JIS 10K	175 (6.89)								
	AS2129 TABLE C D E	165 (6.50)								
	AS2129 TABLE F	185 (7.28)								
	AS4087 PN14, PN16	165 (6.50)								
	AS4087 PN21	185 (7.28)								
DN 80 (3 in.)	EN1092-1 PN10, PN16, PN25, PN40	200 (7.87)	200 (7.87)	303 (11.93)	51.5 (2.03)	233 (9.17)	156 (6.14)	47 (1.85)	17 (37)	14 (31)
	ASME B16.5 CLASS 150	190.5 (7.50)								
	JIS 10K	185 (7.28)								
	AS2129 TABLE C D E	185 (7.28)								
	AS2129 TABLE F	205 (8.07)								
	AS4087 PN14, PN16	185 (7.28)								
	AS4087 PN21	205 (8.07)								
DN100 (4 in.)	EN1092-1 PN10, PN16	220 (8.66)	250 (9.84)	344 (13.54)	63.75 (2.51)	274 (10.79)	197 (7.76)	64 (2.52)	23 (51)	20 (44)
	EN1092-1 PN25, PN40	235 (9.25)								
	ASME B16.5 CLASS 150	228.6 (9.00)								
	JIS 7.5K	238 (9.37)								
	JIS 10K	210 (8.27)								
	AS2129 TABLE C D E	215 (8.46)								
	AS4087 PN14, PN16	215 (8.46)								
	AS4087 PN21	230 (9.06)								
DN125 (5 in.)	EN1092-1 PN10, PN16	250 (9.84)	250 (9.84)	344 (13.54)	63.75 (2.51)	274 (10.79)	197 (7.76)	64 (2.52)	26 (57)	23 (51)
	EN1092-1 PN25, PN40	270 (10.63)								
	ASME B16.5 CLASS 150	254 (10.00)								
	JIS 10K	250 (9.84)								
	AS2129 TABLE C D E	255 (10.04)								
DN150 (6 in.)	EN1092-1 PN10, PN16	285 (11.22)	300 (11.81)	364 (14.33)	84.4 (3.32)	294 (11.57)	217 (8.54)	100.2 (3.94)	36 (79)	33 (72)
	EN1092-1 PN25, PN40	300 (11.81)								
	ASME B16.5 CLASS 150	279.4 (11.00)								
	JIS 7.5K	290 (11.42)								
	JIS 10K	280 (11.02)								
	AS2129 TABLE C D E	280 (11.02)								
	AS4087 PN14, PN16	280 (11.02)								
	AS4087 PN21	305 (12.01)								
DN200 (8 in.)	EN1092-1 PN10, PN16	340 (13.39)	350 (13.78)	390 (15.35)	109.8 (4.32)	320 (12.60)	243 (9.57)	126.7 (4.99)	51 (112)	48 (106)
	EN1092-1 PN25, PN40	360 (14.17)								
	ASME B16.5 CLASS 150	345 (13.58)								
	JIS 7.5K	342 (13.46)								
	JIS 10K	330 (12.99)								
	AS2129 TABLE C D E	335 (13.19)								
	AS4087 PN14, PN16	335 (13.19)								
	AS4087 PN21	370 (14.57)								

DN40 to 300 (1½ to 12 in. NB) (FER) integral / remote sensor dimensions and weights

		Dimensions in mm (in.)							Approx. weight in kg (lb)	
DN	Process connection type	D	L	F	C	E	G	X	Integral	Remote
DN250 (10 in.)	EN1092-1 PN10	395 (15.55)	450 (17.72)	415 (16.34)	136.8 (5.39)	345 (13.58)	268 (10.55)	153.5 (6.04)	78 (172)	75 (165)
	EN1092-1 PN16	405 (15.94)								
	EN1092-1 PN25	425 (16.73)								
	ASME B16.5 CLASS 150	405 (15.94)								
	JIS 7.5K	400 (15.75)								
	JIS 10K	400 (15.75)								
	AS2129 TABLE C D E	405 (15.94)								
	AS4087 PN14, PN16	405 (15.94)								
	AS4087 PN21	430 (16.93)								
DN300 (12 in.)	EN1092-1 PN10	445 (17.52)	500 (19.69)	441 (17.36)	162.2 (6.39)	371 (14.61)	294 (11.57)	203.5 (8.01)	115 (253)	112 (247)
	EN1092-1 PN16	460 (18.11)								
	EN1092-1 PN25	485 (19.09)								
	ASME B16.5 CLASS 150	485 (19.09)								
	JIS 10K	445 (17.52)								
	AS2129 TABLE C D E	455 (17.91)								
	AS4087 PN14, PN16	455 (17.91)								
	AS4087 PN21	490 (19.29)								

DN40 to 300 (1 1/2 to 12 in. NB) (FER) integral / remote sensor dimensions and weights (Continued)

FER – DN350 to 600 (14 to 24 in. NB) remote sensor

Dimensions in mm (in.)

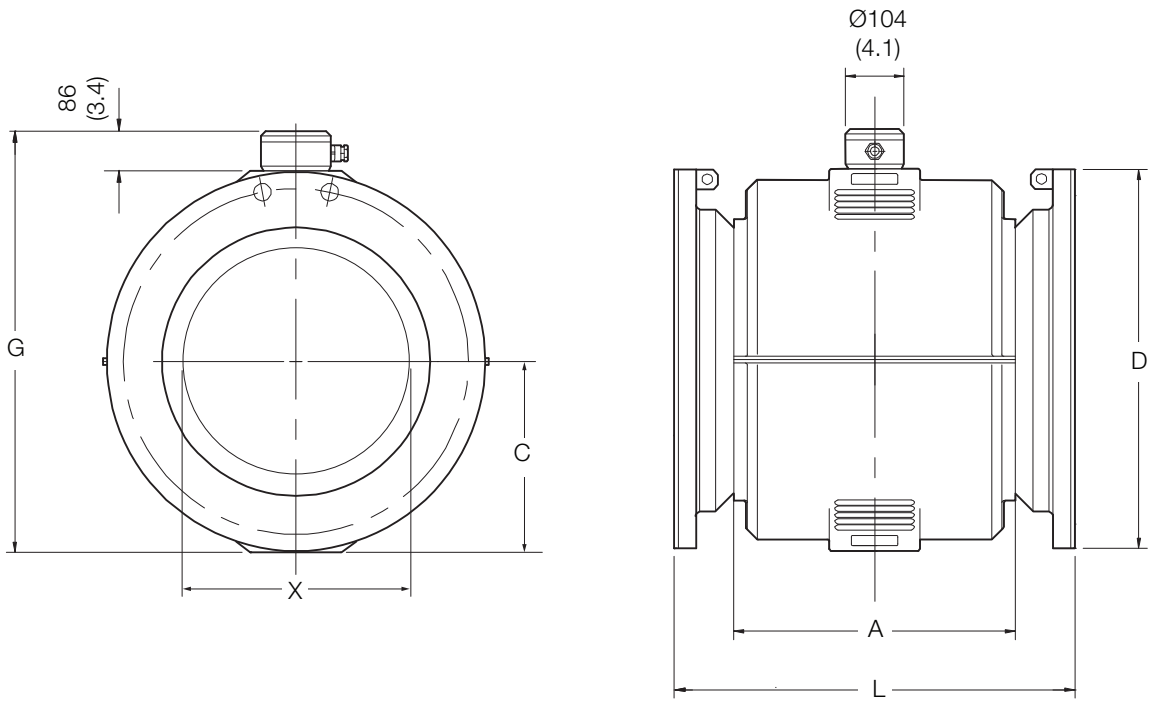

DN350 to 600 (14 to 24 in. NB) (FER) remote sensor

		Dimensions in mm (in.)								Approx. weight in kg (lb)
DN	**Process connection type**	**D**	**L**	**F**	**C**	**E**	**G**	**A**	**X**	**Remote**
DN350 (14 in.)	EN1092-1 PN10	505 (19.88)	550 (21.65)	472 (18.58)	231 (9.09)	402 (15.83)	325 (12.80)	376 (14.80)	340 (13.39)	100 (220)
	EN1092-1 PN16	520 (20.47)								
	EN1092-1 PN25	555 (21.85)								
	EN1092-1 PN40	580 (22.83)								
	JIS 5K	480 (18.90)								
	JIS 10K	490 (19.29)								
	AS2129 TABLE C D E	525 (20.67)								
	AS2129 TABLE F	550 (21.65)								
	AS4087 PN14, PN16	525 (20.67)								
	AS4087 PN21	550 (21.65)								
DN400 (16 in.)	EN1092-1 PN10	565 (22.24)	600 (23.62)	502 (19.76)	257.5 (10.14)	432 (17.01)	355 (13.98)	420 (16.54)	390 (15.35)	115 (253)
	EN1092-1 PN16	580 (22.83)								
	EN1092-1 PN25	620 (24.41)								
	EN1092-1 PN40	660 (25.98)								
	JIS 5K	540 (21.26)								
	JIS 10K	560 (22.05)								
	AS2129 TABLE C D E	580 (22.83)								
	AS2129 TABLE F	610 (24.02)								
	AS4087 PN14, PN16	580 (22.83)								
	AS4087 PN21	610 (24.02)								

DN350 to 600 (14 to 24 in. NB) (FER) remote sensor dimensions / weights

		Dimensions in mm (in.)								Approx. weight in kg (lb)
DN	Process connection type	D	L	F	C	E	G	A	X	Remote
DN450 (18 in.)	EN1092-1 PN10	615 (24.21)	700 (27.56)	537 (21.14)	285 (11.22)	467 (18.39)	390 (15.35)	480 (18.90)	440 (17.32)	160 (352)
	EN1092-1 PN16	640 (25.20)								
	EN1092-1 PN25	670 (26.38)								
	EN1092-1 PN40	685 (26.97)								
	JIS 5K	605 (23.82)								
	JIS 10K	620 (24.41)								
	AS2129 TABLE C D E	640 (25.20)								
	AS2129 TABLE F	675 (26.57)								
	AS4087 PN14, PN16	640 (25.20)								
	AS4087 PN21	675 (26.57)								
DN500 (20 in.)	EN1092-1 PN10	670 (26.38)	770 (30.31)	557 (21.93)	317.5 (12.50)	487 (19.17)	410 (16.14)	520 (20.47)	490 (19.29)	217 (477)
	EN1092-1 PN16	715 (28.15)								
	EN1092-1 PN25	730 (28.74)								
	EN1092-1 PN40	755 (29.72)								
	JIS 5K	655 (25.79)								
	JIS 10K	675 (26.57)								
	AS2129 TABLE C D E	705 (27.76)								
	AS2129 TABLE F	735 (28.94)								
	AS4087 PN14, PN16	705 (27.76)								
	AS4087 PN21	735 (28.94)								
DN600 (24 in.)	EN1092-1 PN10	780 (30.71)	920 (36.22)	602 (23.70)	345 (13.58)	532 (20.94)	455 (17.91)	610 (24.02)	591 (23.27)	315 (693)
	EN1092-1 PN16	840 (33.07)								
	EN1092-1 PN25	845 (33.27)								
	EN1092-1 PN40	890 (35.04)								
	JIS 5K	770 (30.31)								
	JIS 10K	795 (31.30)								
	AS2129 TABLE C D E	825 (32.48)								
	AS2129 TABLE F	850 (33.46)								
	AS4087 PN14, PN16	825 (32.48)								
	AS4087 PN21	850 (33.46)								

DN350 to 600 (14 to 24 in. NB) (FER) remote sensor dimensions / weights (Continued)

FEV – DN40 to 200 (1½ to 8 in. NB) integral / remote sensor

Dimensions in mm (in.)

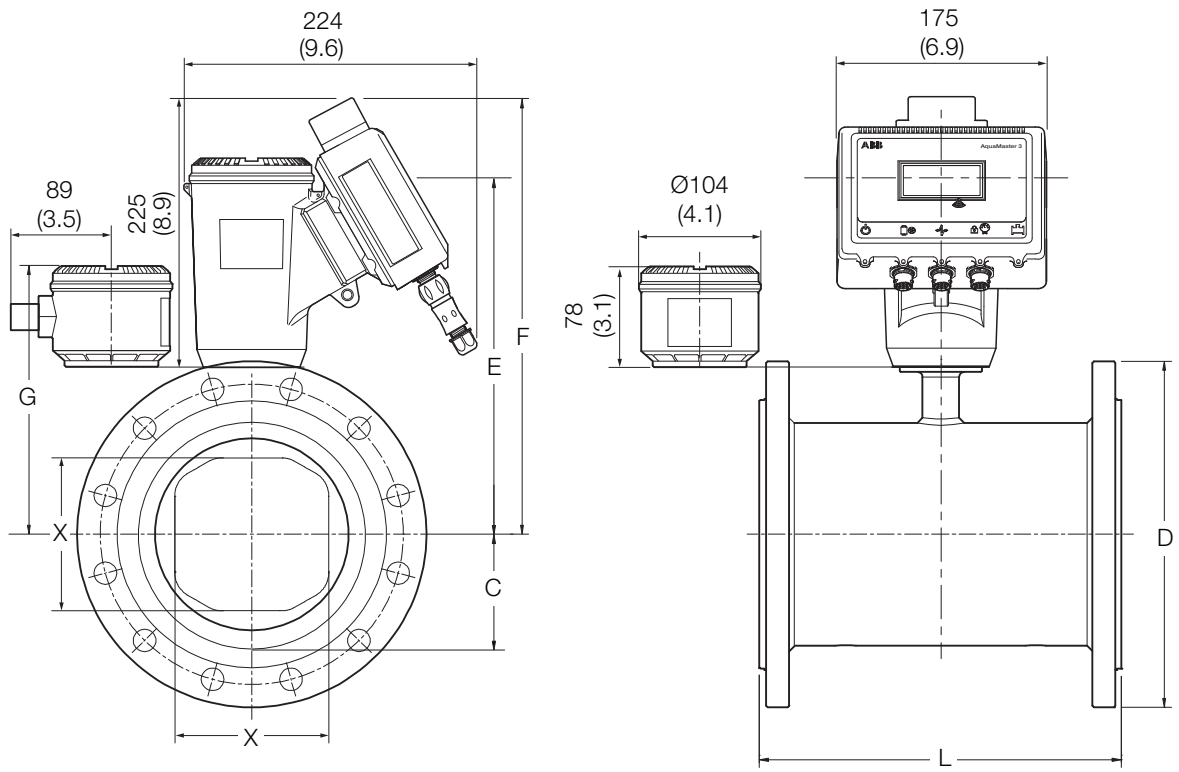

DN40 to 200 (1½ to 8 in. NB) (FEV) integral / remote sensor

		Dimensions in mm (in.)						Approx. weight in kg (lb)	
DN	**Process connection type**	**D**	**L**	**F**	**E**	**G**	**X**	**Integral**	**Remote**
DN40 (1½ in.)	EN1092-1 PN10, 16, 25, 40	150 (5.91)	190 (7.48)	260 (10.24)	185 (7.28)	137 (5.39)	30 (1.18)	12.8 (28.16)	11.8 (25.96)
	ASME B16.5 CLASS 150								
	AS2129 TABLE D, E, F								
DN50 (2 in.)	EN1092-1 PN10, 16, 25, 40	165 (6.50)	190.5 (7.5)	261 (10.28)	186 (7.32)	138 (5.43)	38 (1.5)	13.75 (30.25)	12.75 (28.05)
	ASME B16.5 CLASS 150								
DN80 (3 in.)	EN1092-1 PN10, 16, 25, 40	200 (7.87)	190.5 (7.5)	280 (11.04)	205.5 (8.09)	157.5 (6.2)	61 (2.4)	17.2 (37.84)	16.2 (35.64)
	ASME B16.5 CLASS 150								
	AS4087 PN16, 21								
	AS2129 TABLE D, E, F								
DN100 (4 in.)	EN1092-1 PN10, 16, 25, 40	225 (8.86)	240.5 (9.47)	300.5 (11.83)	225.5 (8.88)	177.5 (6.98)	70 (2.76)	19.3 (42.5)	18.3 (40.3)
	ASME B16.5 CLASS 150								
	AS4087 PN16								
DN150 (6 in.)	EN1092-1 PN10, 16, 25, 40	300 (11.81)	290.5 (11.44)	333.5 (13.13)	258.5 (10.18)	210.5 (8.29)	103 (4.06)	35.1 (77.2)	34.1 (75)
	ASME B16.5 CLASS 150								
	AS4087 PN16								
DN200 (8 in.)	EN1092-1 PN10, 16	375 (11.76)	340.5 (13.4)	358.7 (14.12)	283.7 (11.17)	235.7 (9.28)	150 (5.91)	67 (147.4)	66 (145.2)
	ASME B16.5 CLASS 150								
	AS2129 TABLE C, D, E, F								
	AS4087 PN14, 16, 21								

WaterMaster integral / remote FEV – DN40 to 200 (1½ to 8 in.) cast iron sensor dimensions / weights

		Dimensions in mm (in.)							Approx. weight in kg (lb)	
DN	Process connection type	D	L	F	C	E	G	X	Integral	Remote
DN40 (1 1/2 in.)	EN1092-1 PN10, PN40	150 (5.91)	200 (7.87)	285 (11.22)	30.4 (1.20)	215 (8.46)	138 (5.43)	30 (1.18)	10 (22)	7 (15)
	ASME B16.5 CLASS 150	127 (5.00)								
	JIS 10K	140 (5.51)								
	AS2129 TABLE F	140 (5.51)								
	AS2129 TABLE C D E	135 (5.31)								
	AS4087 PN14	135 (5.31)								
DN50 (2 in.)	EN1092-1 PN10, PN16	165 (6.50)	200 (7.87)	293 (11.54)	38.3 (1.51)	223 (8.78)	146 (5.75)	38 (1.50)	11 (24)	8 (18)
	ASME B16.5 CLASS 150	152.4 (6.00)								
	JIS 10K	155 (6.10)								
	AS4087 PN21	165 (6.50)								
	AS2129 TABLE F	165 (6.50)								
	AS2129 TABLE C D E	150 (5.91)								
	AS4087 PN14, PN16	150 (5.91)								
DN65 (2 1/2 in.)	AS4087 PN14, PN16	165 (6.50)	200 (7.87)	299 (11.77)	45.2 (1.78)	229 (9.02)	152 (5.98)	48 (1.89)	13 (29)	10 (22)
	AS2129 TABLE C D E	165 (6.50)								
	EN1092-1 PN10	185 (7.28)								
	EN1092-1 PN16	185 (7.28)								
DN80 (3 in.)	EN1092-1 PN10, PN16	200 (7.87)	200 (7.87)	303 (11.93)	51.5 (2.03)	233 (9.17)	156 (6.14)	61 (2.40)	16 (35)	13 (28)
	ASME B16.5 CLASS 150	190 (7.48)								
	JIS 7.5K	211 (8.31)								
	JIS 10K	185 (7.28)								
	AS2129 TABLE C D E	185 (7.28)								
	AS4087 PN14, PN16	185 (7.28)								
	AS2129 TABLE F	205 (8.07)								
	AS4087 PN21	205 (8.07)								
DN100 (4 in.)	EN1092-1 PN10, PN16	220 (8.66)	250 (9.84)	344 (13.54)	63.75 (2.51)	274 (10.79)	196.8 (7.75)	70 (2.76)	21 (47)	18 (40)
	ASME B16.5 CLASS 150	228.6 (9.00)								
	JIS 7.5K	238 (9.37)								
	JIS 10K	210 (8.27)								
	AS2129 TABLE C D	215 (8.46)								
	AS4087 PN14, PN16	215 (8.46)								
	AS2129 TABLE E	215 (8.46)								
	AS4087 PN21	230 (9.06)								
	AS2129 TABLE F	230 (9.06)								
DN125 (5 in.)	EN1092-1 PN10, PN16	250 (9.84)	250 (9.84)	344 (13.54)	63.75 (2.51)	274 (10.79)	197 (7.76)	70 (2.76)	24 (53)	21 (46)
	ASME B16.5 CLASS 150	254 (10.00)								
	JIS 10K	250 (9.84)								
	AS2129 TABLE C D E	255 (10.04)								
	AS2129 TABLE F	280 (11.02)								
DN150 (6 in.)	EN1092 PN10, PN16	285 (11.22)	300 (11.81)	364 (14.33)	84.4 (3.32)	294 (11.57)	217 (8.54)	103 (4.06)	34 (75)	31 (68)
	ASME B16.5 CLASS 150	279 (10.98)								
	JIS 7.5k	290 (11.42)								
	JIS 10K	280 (11.02)								
	AS2129 TABLE C D	280 (11.02)								
	AS4087 PN14, PN16	280 (11.02)								
	AS2129 TABLE E	280 (11.02)								
	AS2129 TABLE F	305 (12.01)								
	AS4087 PN21	305 (12.01)								
DN200 (8 in.)	EN1092-1 PN10	340 (13.39)	350 (13.78)	390 (15.35)	109.8 (4.32)	320 (12.60)	243 (9.57)	150 (5.91)	53 (116)	50 (110)
	EN1092-1 PN16	340 (13.39)								
	ASME B16.5 CLASS 150	345 (13.58)								
	JIS 7.5K	342 (13.46)								
	JIS 10K	330 (12.99)								
	AS2129 TABLE C D	335 (13.19)								
	AS4087 PN14, PN 16	335 (13.19)								
	AS2129 TABLE E	335 (13.19)								
	AS2129 TABLE F	370 (14.57)								
	AS4087 PN21	370 (14.57)								

DN40 to 200 (1 1/2 to 8 in. NB) (FEV) integral / remote sensor dimensions / weights

FEF – DN250 to 600 (10 to 24 in. NB) remote sensor

Dimensions in mm (in.)

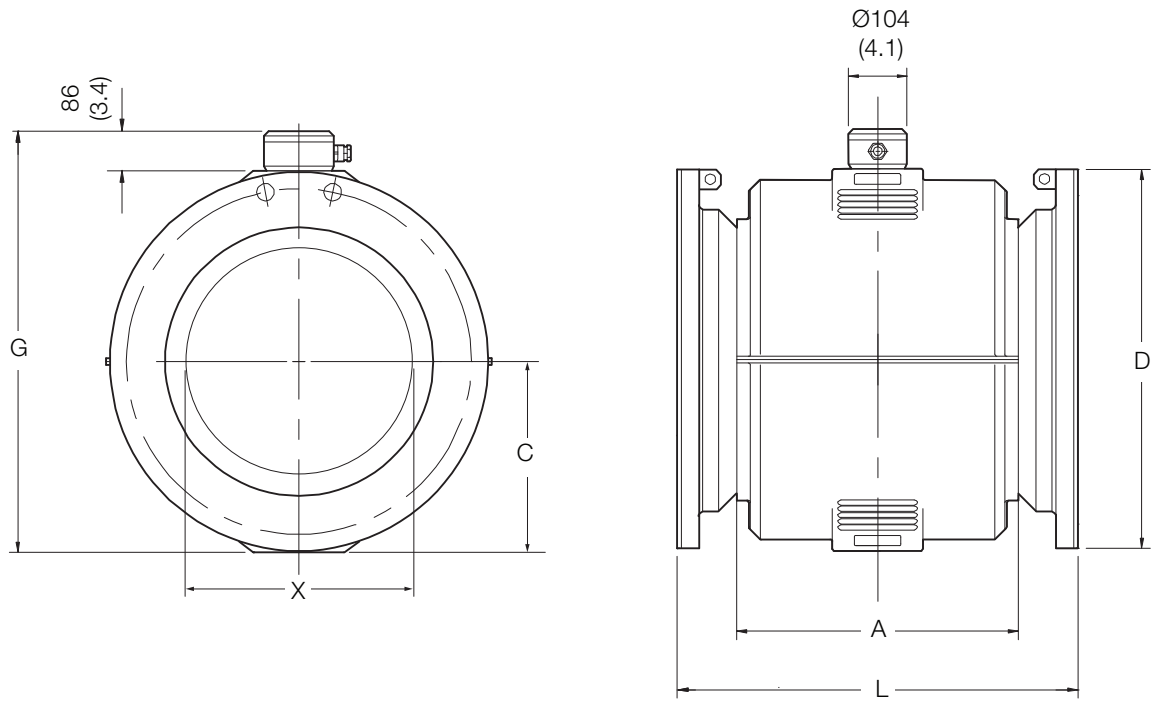

DN250 to 600 (10 to 24 in. NB) (FEF) remote sensor

		Dimensions in mm (in.)					Approx. weight in kg (lb)
DN	**Process connection type**	**D**	**L**	**C**	**G**	**A**	
DN250 (10 in.)	ASME B16.5 CLASS 150	405 (15.94)	450 (17.72)	215 (8.46)	301 (11.85)	300 (11.81)	88 (194)
	ASME B16.5 CLASS 300	445 (17.52)	490 (19.29)				
	EN1092 -1 PN10	395 (15.55)	450 (17.72)				
	EN1092 – 1 PN16	405 (15.94)	450 (17.72)				
	EN1092 – 1 PN25	425 (16.73)	490 (19.29)				
	EN1092 – 1 PN40	450 (17.72)	490 (19.29)				
	JIS 5K	385 (15.16)	450 (17.72)				
	JIS 10K	400 (15.75)	450 (17.72)				
	AS4087 PN14, PN16	405 (15.94)	450 (17.72)				
	AS2129 TABLE C D		450 (17.72)				
	AS2129 TABLE E		450 (17.72)				
	AS4087 PN21	430 (16.93)	450 (17.72)				
	AS2129 TABLE F		450 (17.72)				
DN300 (12 in.)	ASME B16.5 CLASS 150	485 (19.09)	500 (19.69)	231 (9.09)	317 (12.48)	352 (13.86)	128 (282)
	ASME B16.5 CLASS 300	520 (20.47)	540 (21.26)				
	EN1092 – 1 PN10	445 (17.52)	500 (19.69)				
	EN1092 – 1 PN16	460 (18.11)	500 (19.69)				
	EN1092 – 1 PN25	485 (19.09)	540 (21.26)				
	EN1092 – 1 PN40	515 (20.28)	540 (21.26)				
	JIS 5K	430 (16.93)	500 (19.69)				
	JIS 10K	445 (17.52)	500 (19.69)				
	AS4087 PN14, PN16	455 (17.91)	500 (19.69)				
	AS2129 TABLE TABLE C D	455 (17.91)	500 (19.69)				
	AS2129 TABLE E	455 (17.91)	500 (19.69)				
	AS4087 PN21	490 (19.29)	500 (19.69)				
	AS2129 TABLE F	490 (19.29)	500 (19.69)				

DN250 to 600 (10 to 24 in. NB) (FEF) remote sensor dimensions / weights

		Dimensions in mm (in.)					Approx. weight in kg (lb)
DN	Process connection type	D	L	C	G	A	
DN350 (14 in.)	ASME B16.5 CLASS 150	535 (21.06)	550 (21.65)	257.5 (10.14)	346 (13.62)	376 (14.80)	100 (220)
	ASME B16.5 CLASS 300	585 (23.03)	570 (22.44)				
	EN1092 – 1 PN10	505 (19.88)	550 (21.65)				
	EN1092 – 1 PN16	520 (20.47)	550 (21.65)				
	EN1092 – 1 PN25	555 (21.85)	570 (22.44)				
	EN1092 – 1 PN40	580 (22.83)	570 (22.44)				
	JIS 5K	480 (18.90)	550 (21.65)				
	JIS 7.5K	530 (20.87)	550 (21.65)				
	JIS 10K	490 (19.29)	550 (21.65)				
	AS4087 PN14, PN16	525 (20.67)	550 (21.65)				
	AS2129 TABLE C D E	525 (20.67)	550 (21.65)				
	AS4087 PN21	550 (21.65)	550 (21.65)				
	AS2129 TABLE F	550 (21.65)	550 (21.65)				
	AS4087 PN35	550 (21.65)	570 (22.44)				
	AS2129 TABLE H	550 (21.65)	570 (22.44)				
DN375 (15 in.)	AS4087 PN14, PN16	550 (21.65)	550 (21.65)	257.5 (10.14)	346 (13.62)	376 (14.80)	115 (253)
	AS2129 TABLE C	550 (21.65)	550 (21.65)				
	AS4087 PN35	580 (22.83)	570 (22.44)				
DN400 (16 in.)	ASME B16.5 CLASS 150	600 (23.62)	600 (23.62)	285 (11.22)	371 (14.61)	420 (16.54)	115 (253)
	ASME B16.5 CLASS 300	650 (25.59)	620 (24.41)				
	EN1092 – 1 PN10	565 (22.24)	600 (23.62)				
	EN1092 – 1 PN16	580 (22.83)	600 (23.62)				
	EN1092 – 1 PN25	620 (24.41)	620 (24.41)				
	EN1092 – 1 PN40	660 (25.98)	620 (24.41)				
	JIS 5K	540 (21.26)	600 (23.62)				
	JIS 7.5K	582 (22.91)	600 (23.62)				
	JIS 10K	560 (22.05)	600 (23.62)				
	AS4087 PN14, PN16	580 (22.83)	600 (23.62)				
	AS2129 TABLE C D E	580 (22.83)	600 (23.62)				
	AS4087 PN21	610 (24.02)	600 (23.62)				
	AS2129 TABLE F	610 (24.02)	600 (23.62)				
	AS4087 PN35	610 (24.02)	620 (24.41)				
	AS2129 TABLE H	610 (24.02)	620 (24.41)				
DN450 (18 in.)	ASME B16.5 CLASS 150	635 (25.00)	700 (27.56)	317.5 (12.50)	402 (15.83)	480 (18.90)	160 (352)
	ASME B16.5 CLASS 300	710 (27.95)					
	EN1092 – 1 PN10	615 (24.21)					
	EN1092 – 1 PN16	640 (25.20)					
	EN1092 – 1 PN25	670 (26.38)					
	EN1092 – 1 PN40	685 (26.97)					
	JIS 5K	605 (23.82)					
	JIS 7.5K	652 (25.67)					
	JIS 10K	620 (24.41)					
	AS4087 PN14, PN16	640 (25.20)					
	AS2129 TABLE C D	640 (25.20)					
	AS2129 TABLE E	640 (25.20)					
	AS4087 PN21	675 (26.57)					
	AS2129 TABLE F	675 (26.57)					
	AS4087 PN35	675 (26.57)					
	AS2129 TABLE H	675 (26.57)					

DN250 to 600 (10 to 24 in. NB) (FEF) remote sensor dimensions / weights (Continued)

		Dimensions in mm (in.)					Approx. weight in kg (lb)
DN	Process connection type	D	L	C	G	A	
DN500 (20 in.)	ASME B16.5 CLASS 150	700 (27.56)	770 (30.31)	345 (13.58)	429 (16.89)	520 (20.47)	217 (455)
	ASME B16.5 CLASS 300	775 (30.51)					
	EN1092 – 1 PN10	670 (26.38)					
	EN1092 – 1 PN16	715 (28.15)					
	EN1092 – 1 PN25	730 (28.74)					
	EN1092 – 1 PN40	755 (29.72)					
	JIS 5K	655 (25.79)					
	JIS 7.5K	706 (27.80)					
	JIS 10K	675 (26.57)					
	AS4087 PN 14, PN16	705 (27.76)					
	AS2129 TABLE C D E	705 (27.76)					
	AS4087 PN21	735 (28.94)					
	AS2129 TABLE F	735 (28.94)					
	AS4087 PN35	735 (28.94)					
	AS2129 TABLE H	735 (28.94)					
DN600 (24 in.)	ASME B16.5 CLASS 150	815 (32.09)	920 (36.22)	387.5 (15.25)	472 (18.58)	610 (24.02)	315 (693)
	ASME B16.5 CLASS 300	915 (36.02)					
	EN1092 – 1 PN10	780 (30.71)					
	EN1092 – 1 PN16	840 (33.07)					
	EN1092 – 1 PN25	845 (33.27)					
	EN1092 – 1 PN40	890 (35.04)					
	JIS 5K	770 (30.31)					
	JIS 7.5K	810 (31.89)					
	JIS 10K	795 (31.30)					
	AS4087 PN14, PN16	825 (32.48)					
	AS2129 TABLE C D	825 (32.48)					
	AS2129 TABLE E	825 (32.48)					
	AS4087 PN21	850 (33.46)					
	AS2129 TABLE F	850 (33.46)					
	AS4087 PN35	850 (33.46)					
	AS2129 TABLE H	850 (33.46)					

DN250 to 600 (10 to 24 in. NB) (FEF) remote sensor dimensions / weights (Continued)

Ordering information

AquaMaster FER reduced-bore sensor flowmeter series

Product coding field number	1,2,3,4,5,6	7,8,9	10	11	12	13	14,15	16	17	18	19	20	21	22	23	24	25	26	27	Options
AquaMaster system. Reduced-bore sensor with integral mounted transmitter (DN40 to 300 only)	**FER211**	XXX	X	X	X	X	XX	X	X	X	X	X	X	X	X	X	X	X	X	Add as required – see next page
AquaMaster system. Reduced-bore sensor with remote mounted transmitter	**FER221**																			
AquaMaster system. Reduced-bore sensor with close coupled transmitter	**FER251**																			
AquaMaster reduced-bore sensor only, close coupled, without transmitter	**FER271**																			
AquaMaster reduced-bore sensor only, remote mount, without transmitter	**FER281**																			
AquaMaster reduced-bore sensor only, integral mount, without transmitter (DN40 to 300 only)	**FER291**																			
Bore diameter																				
DN 15 (1/2 in.)		015																		
DN 20 (3/4 in.)		020																		
DN 25 (1 in.)		025																		
DN 40 (1 1/2 in.)		040																		
DN 50 (2 in.)		050																		
DN 65 (2 1/2 in.)		065																		
DN 80 (3 in.)		080																		
DN 100 (4 in.)		100																		
DN 125 (5 in.)		125																		
DN 150 (6 in.)		150																		
DN 200 (8 in.)		200																		
DN 250 (10 in.)		250																		
DN 300 (12 in.)		300																		
DN 350 (14 in.)		350																		
DN 375 (15 in.)		375																		
DN 400 (16 in.)		400																		
DN 450 (18 in.)		450																		
DN 500 (20 in.)		500																		
DN 600 (24 in.)		600																		
Liner material																				
Elastomer – DN40 to 600 (1 1/2 to 24 in.)			K																	
PPS – DN15 to 25 (1/2 to 1 in.)			R																	
Electrode design																				
Standard				1																
Measuring electrodes material																				
Stainless steel 316					S															
Super Austenitic steel (1.4529) – DN40 to 600 (1 1/2 to 24 in.)					U															
Grounding accessories																				
2 x stainless steel potential equalizing rings						4														
Process connection type (refer to pages 16 to 21)																				
Flanges ASME B16.5 Class 150	(DN40 / 50 / 80 / 100 / 150 to 300)						A1													
Flanges AWWA C207 Class E	(DN40 / 50 / 80)						C3													
Flanges JIS 10K	(DN40 / 50 / 80 / 100 / 150 to 300)						J1													
Flanges JIS 5K	(DN100 to 300)						J2													
Flanges AS 4087 PN 21	(DN50 / 80 / 100 / 150 to 600)						E0													
Flanges AS 4087 PN 16	(DN50 / 80 / 100 / 150 to 350 / 450 to 600)						E1													
Flanges AS 4087 PN 14	(DN40 to 300)						E2													
Flanges AS 2129 Table F	(DN40 / 50 / 80 / 100 / 150 to 600)						E3													
Flanges AS 2129 Table E	(DN40 / 50 / 80)						E4													
Flanges AS 2129 Table D	(DN40 / 50 / 80 / 100 / 150 to 300)						E5													
Flanges AS2129 Table C	(DN40 to 300)						E6													
ISO 7005 PN 10 EN 1092-1	(DN40 to 600)						S1													
ISO 7005 PN 16 EN 1092-1	(DN40 to 600)						S2													
ISO 7005 PN 40 EN 1092-1	(DN40)						S4													
Male thread acc. ISO 228 / DIN 2999 (conical)	(DN15 to 25)						M1													
Male thread acc. NPSM (conical)	(DN15 to 25)						M2													
Process connection material																				
Brass – DN15 to 25 (1/2 to 1 in.)								A												
Carbon steel – DN40 to 600 (1 1/2 to 24 in.)								B												
Usage certifications																				
Standard									1											
Calibration type																				
Standard Class 2 factory calibration										A										
Standard Class 1 factory calibration										B										
Enhanced Class 2 factory calibration										P										
Enhanced Class 1 factory calibration										N										
Installation temperature range / ambient temperature range																				
Standard design –20 to 60 °C (–4 to 140 °F)											1									
Name plate																				
Adhesive label												A								

Continued on next page …

AquaMaster FER reduced-bore sensor flowmeter series *(Continued)*

Product coding field number	1,2,3,4,5,6	7,8,9	10	11	12	13	14,15	16	17	18	19	20	21	22	23	24	25	26	27	Options
Signal cable length and type																				
Without signal cable													0							
5 m (16.4 ft)													1							
10 m (32.8 ft)													2							
20 m (65.6 ft)													3							
30 m (98.4 ft)													4							
50 m (164.0 ft)													5							
80 m (262.5 ft)													6							
Others													9							
Explosion protection certification																				
Without														A						
Protection class transmitter / protection class sensor																				
IP68 (NEMA 6P) / IP68 (NEMA 6P) – cable not fitted and not potted*															5					
IP68 (NEMA 6P) / IP68 (NEMA 6P) – cable fitted and potted															6					
Cable conduits																				
MIL style																G				
Power supply																				
Battery powered – battery not fitted																	5			
AC + internal back-up																	7			
External renewable energy																	8			
Input and output signal type																				
MODBUS																		M		
Mobile communication																		H		
ScanReader																		S		
Without (**Note.** Pulse outputs and RS232 are always present)																		Y		
Configuration type / diagnostics type																				
Parameters set to factory defaults																			1	

Options – add to order code

Transmitter related

Accessories

Configuration lead RS232	AC
Standard battery pack	AD
AC + external battery back-up connector (power supply option 7 only)	AS
Modbus cable RS485	AT
Anti-vandal cover (integral only) – future option	AV

Mobile communication

Without	G0
Integral (850 / 900 / 1800 / 1900 MHz)	G3
Remote 1 m (850 / 900 / 1800 / 1900 MHz)	G6
Remote 5 m (850 / 900 / 1800 / 1900 MHz)	G7
Remote 10 m (850 / 900 / 1800 / 1900 MHz)	G8

Logger and protocol

ABB Logger – Capula / BVS	LP2
ABB Logger – Hydreka	LP5
ABB Logger – QTech	LP6
ABB Logger – Areal Topkai	LP7
ABB Logger – EcoTech	LP8
ABB Logger – Autochart I+P	LP9
ABB Logger – HydroComp	LPA
ABB Logger – ABB Generic (e.g. LogMaster)	LPB
ABB Logger – ABB AC800M System	LPC
ABB Logger – Zeepaard	LPE
ABB Logger – Agua Ambiente Servicios Integrales SA	LPF
Not Required / No Logger	LP0
Others	LPZ

Documentation language

German (pending)	M1
Italian (pending)	M2
Spanish (pending)	M3
French (pending)	M4
English	M5

Pressure span

1000 kPa / 10 bar / 145 psi	PS1
1600 kPa / 16 bar / 232 psi	PS2
2000 kPa / 20 bar / 300 psi	PS3
Without	PS0
Others	PSZ

Sensor related

Other usage certifications

MID, DN40 to 300 ($1^1/_2$ to 12 in.), N/P calibration only	CM1
OIML R049, DN40 to 300 ($1^1/_2$ to 12 in.), N/P calibration only	CM2

Verification type

Without fingerprint	V0
With CalMaster fingerprint	V2

Potable water and Food & Beverage approvals

WRAS	CWA
AS4020	CWE
ACS	CWF

Pressure transducer

Remote, no transducer	PT2
Remote, cable length 5 m (15 ft)	PT4
Remote, cable length 10 m (33 ft)	PT5
Remote, cable length 20 m (65 ft)	PT6
Without	PT0
Others	PTZ

* Only IP68 after potting by others

AquaMaster FEF full-bore sensor flowmeter series

Product coding field number	1,2,3,4,5,6	7,8,9	10	11	12	13	14,15	16	17	18	19	20	21	22	23	24	25	26	27	Options
AquaMaster system. Full-bore sensor with remote mounted transmitter	**FEF221**	XXX	X	X	X	X	XX	X	X	X	X	X	X	X	X	X	X	X	X	Add as required – see next page
AquaMaster system. Full-bore sensor with close coupled transmitter	**FEF251**																			
AquaMaster full-bore sensor only, close coupled, without transmitter	**FEF271**																			
AquaMaster full-bore sensor only, remote mount, without transmitter	**FEF281**																			
Bore diameter																				
DN 250 (10 in.)		250																		
DN 300 (12 in.)		300																		
DN 350 (14 in.)		350																		
DN 375 (15 in.)		375																		
DN 400 (16 in.)		400																		
DN 450 (18 in.)		450																		
DN 500 (20 in.)		500																		
DN 600 (24 in.)		600																		
Liner material																				
Elastomer – DN250 to 600 (10 to 24 in.)			K																	
Electrode design																				
Standard				1																
Measuring electrodes material																				
Stainless steel 316					S															
Super Austenitic steel (1.4529) – DN250 to 600 (10 to 24 in.)					U															
Grounding accessories																				
2 x stainless steel potential equalizing rings						4														
Process connection type (refer to pages 24 to 26)																				
Flanges ASME B16.5 Class 150	(DN250 to 350 / 400 to 600)						A1													
Flanges ASME B16.5 Class 300	(DN250 to 350 / 400 to 600)						A3													
Flanges JIS 7.5K	(DN250 to 350 / 400 to 600)						J0													
Flanges JIS 10K	(DN250 to 350 / 400 to 600)						J1													
Flanges JIS 5K	(DN250 to 350 / 400 to 600)						J2													
Flanges AS 4087 PN 21	(DN250 to 350 / 400 to 600)						E0													
Flanges AS 4087 PN 16	(DN250 to 600)						E1													
Flanges AS 4087 PN 14	(DN250 to 600)						E2													
Flanges AS 2129 Table F	(DN250 to 350 / 400 to 600)						E3													
Flanges AS 2129 Table E	(DN250 to 350 / 400 to 600)						E4													
Flanges AS 2129 Table D	(DN250 to 350 / 400 to 600)						E5													
ISO 7005 PN 10 EN 1092-1	(DN250 to 350 / 400 to 600)						S1													
ISO 7005 PN 16 EN 1092-1	(DN250 to 350 / 400 to 600)						S2													
ISO 7005 PN 25 EN 1092-1	(DN250 to 350 / 400 to 600)						S3													
ISO 7005 PN 40 EN 1092-1	(DN250 to 350 / 400 to 600)						S4													
Process connection material																				
Carbon steel								B												
Usage certifications																				
Standard									1											
Calibration type																				
Standard Class 2 factory calibration										A										
Standard Class 1 factory calibration										B										
Enhanced Class 2 factory calibration										P										
Enhanced Class 1 factory calibration										N										
Installation temperature range / ambient temperature range																				
Standard design –20 to 60 °C (–4 to 140 °F)											1									
Name plate																				
Adhesive label												A								
Signal cable length and type																				
Without signal cable													0							
5 m (16.4 ft)													1							
10 m (32.8 ft)													2							
20 m (65.6 ft)													3							
30 m (98.4 ft)													4							
50 m (164.0 ft)													5							
80 m (262.5 ft)													6							
Others													9							
Explosion protection certification																				
Without														A						
Protection class transmitter / protection class sensor																				
IP68 (NEMA 6P) / IP68 (NEMA 6P) – cable not fitted and not potted*															5					
IP68 (NEMA 6P) / IP68 (NEMA 6P) – cable fitted and potted															6					
Cable conduits																				
MIL style																G				

Continued on next page…

AquaMaster FEF full-bore sensor flowmeter series *(Continued)*

Product coding field number	1,2,3,4,5,6	7,8,9	10	11	12	13	14,15	16	17	18	19	20	21	22	23	24	25	26	27	Options
Power supply																				
Battery powered – battery not fitted																	5			
AC + internal back-up																	7			
External renewable energy																	8			
Input and output signal type																				
MODBUS with RS485																		M		
Mobile communication																		H		
ScanReader																		S		
Without (**Note.** Pulse outputs and RS232 are always present)																		Y		
Configuration type / diagnostics type																				
Parameters set to factory defaults																			1	

Options – add to order code

Transmitter related

Accessories

Configuration lead RS232	AC
Standard battery pack	AD
AC + external battery back-up connector (power supply option 7 only)	AS
Modbus cable RS485	AT

Mobile communication

Without	G0
Integral (850 / 900 / 1800 / 1900 MHz)	G3
Remote 1 m (850 / 900 / 1800 / 1900 MHz)	G6
Remote 5 m (850 / 900 / 1800 / 1900 MHz)	G7
Remote 10 m (850 / 900 / 1800 / 1900 MHz)	G8

Logger and protocol

ABB Logger – Capula / BVS	LP2
ABB Logger – Hydreka	LP5
ABB Logger – QTech	LP6
ABB Logger – Areal Topkai	LP7
ABB Logger – EcoTech	LP8
ABB Logger – Autochart I+P	LP9
ABB Logger – HydroComp	LPA
ABB Logger – ABB Generic (e.g. LogMaster)	LPB
ABB Logger – ABB AC800M System	LPC
ABB Logger – Zeepaard	LPE
ABB Logger – Agua Ambiente Servicios Integrales SA	LPF
Not Required / No Logger	LP0
Others	LPZ

Documentation language

German (pending)	M1
Italian (pending)	M2
Spanish (pending)	M3
French (pending)	M4
English	M5

Pressure span

1000 kPa / 10 bar / 145 psi	PS1
1600 kPa / 16 bar / 232 psi	PS2
2000 kPa / 20 bar / 300 psi	PS3
Without	PS0
Others	PSZ

Sensor related

Verification type

Without fingerprint	V0
With CalMaster fingerprint	V2

Potable water and Food & Beverage approvals

WRAS	CWA
NSF61	CWC
AS4020	CWE
ACS	CWF

Pressure transducer

Remote, no transducer	PT2
Remote, cable length 5 m (15 ft)	PT4
Remote, cable length 10 m (33 ft)	PT5
Remote, cable length 20 m (65 ft)	PT6
Without	PT0
Others	PTZ

* Only IP68 after potting by others

AquaMaster FEV optimized full-bore sensor flowmeter series

Product coding field number	1,2,3,4,5,6	7,8,9	10	11	12	13	14,15	16	17	18	19	20	21	22	23	24	25	26	27	Options
AquaMaster system. optimized full-bore sensor with integral-mounted transmitter	**FEV211**	XXX	X	X	X	X	XX	X	X	X	X	X	X	X	X	X	X	X	X	Add as required – see next page
AquaMaster system. optimized full-bore sensor with remote-mounted transmitter	**FEV221**																			
AquaMaster system. optimized full-bore sensor with close-coupled transmitter	**FEV251**																			
AquaMaster optimized full-bore sensor only, close-coupled, without transmitter	**FEV271**																			
AquaMaster optimized full-bore sensor only, remote-mount, without transmitter	**FEV281**																			
AquaMaster optimized full-bore sensor only, integral-mount, without transmitter	**FEV291**																			
Bore diameter																				
DN 40 (1 1/2 in.)		040																		
DN 50 (2 in.)		050																		
DN 65 (2 1/2 in.)		065																		
DN 80 (3 in.)		080																		
DN 100 (4 in.)		100																		
DN 125 (5 in.)		125																		
DN 150 (6 in.)		150																		
DN 200 (8 in.)		200																		
Liner material																				
Polypropylene – DN40 to 200 (1 1/2 to 8 in.)			V																	
Electrode design																				
Standard				1																
Measuring electrodes material																				
Stainless steel 316					S															
Super Austenitic steel (1.4529) – DN40 to 200 (1 1/2 to 8 in.)					U															
Grounding accessories																				
2 x stainless steel potential equalizing rings						4														
Process connection type (refer to pages 22 and 23)																				
Flanges ASME B16.5 Class 150							A1													
Flanges JIS 7.5K	(DN80 / 100 / 150 / 200)						J0													
Flanges JIS 10K	(DN40 / 50 / 80 / 100 / 150 / 200)						J1													
Flanges AS 4087 PN 21	(DN50 / 80 / 100 / 150 / 200)						E0													
Flanges AS 4087 PN 16	(DN50 / 80 / 100 / 150 / 200)						E1													
Flanges AS 2129 Table F	(DN40 / 50 / 80 / 100 / 150 / 200)						E3													
Flanges AS 2129 Table E	(DN40 / 50 / 80 / 100 / 125 / 150 / 200)						E4													
Flanges AS 2129 Table D	(DN40 / 50 / 80 / 100 / 150 / 200)						E5													
ISO 7005 PN 10 EN 1092-1							S1													
ISO 7005 PN 16 EN 1092-1							S2													
ISO 7005 PN 40 EN 1092-1							S4													
Process connection material																				
Carbon steel – DN40 to 200 (1 1/2 to 8 in.)								B												
Usage certifications																				
Standard									1											
Calibration type																				
Standard Class 2 factory calibration										A										
Standard Class 1 factory calibration										B										
Enhanced Class 2 factory calibration										P										
Enhanced Class 1 factory calibration										N										
Class 2.5										J										
Installation temperature range / ambient temperature range																				
Standard design –20 to 60 °C (–4 to 140 °F)											1									
Name plate																				
Adhesive label												A								
Signal cable length and type																				
Without signal cable													0							
5 m (16.4 ft)													1							
10 m (32.8 ft)													2							
20 m (65.6 ft)													3							
30 m (98.4 ft)													4							
50 m (164.0 ft)													5							
80 m (262.5 ft)													6							
Others													9							
Explosion protection certification																				
Without														A						
Protection class transmitter / protection class sensor																				
IP68 (NEMA 6P) / IP68 (NEMA 6P) – cable not fitted and not potted*															5					
IP68 (NEMA 6P) / IP68 (NEMA 6P) – cable fitted and potted															6					
Cable conduits																				
MIL style																G				

Continued on next page…

AquaMaster FEV optimized full-bore sensor flowmeter series *(Continued)*

Product coding field number	1,2,3,4,5,6	7,8,9	10	11	12	13	14,15	16	17	18	19	20	21	22	23	24	25	26	27	Options
Power supply																				
Battery powered – battery not fitted																	5			
AC + internal back-up																	7			
External renewable energy																	8			
Input and output signal type																				
MODBUS with RS485																		M		
Mobile communication																		H		
ScanReader																		S		
Without (**Note.** Pulse outputs and RS232 are always present)																		Y		
Configuration type / diagnostics type																				
Parameters set to factory defaults																			1	

Options – add to order code

Transmitter related

Accessories

Configuration lead RS232	AC
Standard battery pack	AD
AC + external battery back-up connector (power supply option 7 only)	AS
Modbus cable RS485	AT
Anti-vandal cover (integral only) – future option	AV

Mobile communication

Without	G0
Integral (850 / 900 / 1800 / 1900 MHz)	G3
Remote 1 m (850 / 900 / 1800 / 1900 MHz)	G6
Remote 5 m (850 / 900 / 1800 / 1900 MHz)	G7
Remote 10 m (850 / 900 / 1800 / 1900 MHz)	G8

Logger and protocol

ABB Logger – Capula / BVS	LP2
ABB Logger – Hydreka	LP5
ABB Logger – QTech	LP6
ABB Logger – Areal Topkai	LP7
ABB Logger – EcoTech	LP8
ABB Logger – Autochart I+P	LP9
ABB Logger – HydroComp	LPA
ABB Logger – ABB Generic (e.g. LogMaster)	LPB
ABB Logger – ABB AC800M System	LPC
ABB Logger – Zeepaard	LPE
ABB Logger – Agua Ambiente Servicios Integrales SA	LPF
Not Required / No Logger	LP0
Others	LPZ

Documentation language

German (pending)	M1
Italian (pending)	M2
Spanish (pending)	M3
French (pending)	M4
English	M5

Pressure span

1000 kPa / 10 bar / 145 psi	PS1
1600 kPa / 16 bar / 232 psi	PS2
2000 kPa / 20 bar / 300 psi	PS3
Without	PS0
Others	PSZ

Sensor related

Other usage certifications

NMI (pending) *	CM3

* not applicable to DN65 or 125 ($2^1/_2$ or 5 in.) sensors

Verification type

Without fingerprint	V0
With CalMaster fingerprint	V2

Potable water and Food & Beverage approvals

WRAS	CWA
NSF61	CWC
AS4020	CWE
ACS	CWF

Pressure transducer

Remote, no transducer	PT2
Remote, cable length 5 m (15 ft)	PT4
Remote, cable length 10 m (33 ft)	PT5
Remote, cable length 20 m (65 ft)	PT6
Without	PT0
Others	PTZ

*Only IP68 after potting by others

AquaMaster3 transmitter

AquaMaster3 transmitter only, remote- or close-coupled mount	**FET2211A0Y5G**	X	X	X
AquaMaster3 transmitter only, integral mount	**FET2111A0Y5G**			
Power supply				
Battery		5		
AC + backup		7		
External renewable energy		8		
Input and output signal type				
Mobile radio communication			H	
MODBUS with RS485			M	
ScanReader			S	
Without			Y	
Note. Pulse outputs and RS232 are always present				
Configuration				
Standard				1

Options

Options – add to order code

Transmitter related

Accessories

Configuration lead RS232	AC
Standard battery pack (remote only)	AD
AC + external battery back-up connector (power supply option 7 only)	AS
Modbus cable RS485	AT
Anti-vandal cover (integral only) – future option	AV

Mobile communication

Without	G0
Integral (850 / 900 / 1800 / 1900 MHz)	G3
Remote 1 m (850 / 900 / 1800 / 1900 MHz)	G6
Remote 5 m (850 / 900 / 1800 / 1900 MHz)	G7
Remote 10 m (850 / 900 / 1800 / 1900 MHz)	G8

Logger and protocol

ABB Logger – Capula / BVS	LP2
ABB Logger – Hydreka	LP5
ABB Logger – QTech	LP6
ABB Logger – Areal Topkai	LP7
ABB Logger – EcoTech	LP8
ABB Logger – Autochart I+P	LP9
ABB Logger – HydroComp	LPA
ABB Logger – ABB Generic (e.g. LogMaster)	LPB
ABB Logger – ABB AC800M System	LPC
ABB Logger – Zeepaard	LPE
ABB Logger – Agua Ambiente Servicios Integrales SA	LPF
Not Required / No Logger	LP0
Others	LPZ

Documentation language

German (pending)	M1
Italian (pending)	M2
Spanish (pending)	M3
French (pending)	M4
English	M5

Pressure span

1000 kPa / 10 bar / 145 psi	PS1
1600 kPa / 16 bar / 232 psi	PS2
2000 kPa / 20 bar / 300 psi	PS3
Without	PS0
Others	PSZ

Sensor related

Other usage certifications

MID (Measurement Instrument Directive) – FER2, DN40 to 300 ($1^1/_2$ to 12 in.) sensors only	CM2
NMI – FEV sensor only (pending) *	CM3

* not applicable to DN65 or 125 ($2^1/_2$ or 5 in.) sensors

Pressure transducer

Remote, no transducer	PT2
Remote, cable length 5 m (15 ft)	PT4
Remote, cable length 10 m (33 ft)	PT5
Remote, cable length 20 m (65 ft)	PT6
Without	PT0
Others	PTZ

Common accessories

MRBX9969	Close-coupled mounting kit
	Remote GSM aerial kit:
WEBC2003/01	1 m (3.3 ft.)
WEBC2003/05	5 m (16.4 ft.)
WEBC2003/10	10 m (32 ft.)
	MIL connector:
B20433	4-pin MIL – renewable power connector
B20434	7-pin MIL – RS485 MODBUS and RS232 connector
	Batteries / spares
WABC2100	Remote battery pack (M_nO_2)
MEBX2110	Integral battery carrier assembly (replacement spare)
Integral battery type	3.6 V Lithium Thionyl Chloride, size D Recommended manufacturer part numbers: SAFT LS 33600 / Tadiran TL-5930 / Varta ER D / Tekcell SB-D02
	Sensor cable assembly:
WABC2010	0.5 m (1.6 ft.), for integral / close-coupled
WABC2010/01	1 m (3.3 ft.), for remote
WABC2010/05	5 m (16.4 ft.), for remote
WABC2010/10	10 m (32.8 ft.), for remote
WABC2010/20	20 m (65.6 ft.), for remote
WABC2010/30	30 m (98.4 ft.), for remote
WABC2010/40	40 m (131.2 ft.), for remote
WABC2010/50	50 m (164.0 ft.), for remote
WABC2010/60	60 m (196.8 ft.), for remote
WABC2010/70	70 m (229.6 ft.), for remote
WABC2010/80	80 m (262.4 ft.), for remote
	Output cable:
WABC2010/01	1 m (3.3 ft.) wire-ended
WEBC2011/M	for Technolog Cello (MIL)
WEBC2012/M	for Technolog Cello (Brad Harrsion)
WEBC2013/M	for RADCOM Multilog
WEBC2014/M	for Primayer Xilog
WEBC2006/M	2x19-way MIL
WEBC2024	Connector security plug – pack of 5
	Communication cable:
WEBC2100	RS232 to USB
WEBC2101	RS485 to USB
	Pressure cable assembly:
WABX2000/05	16 bar (232 psi), 5 m (16.4 ft.)
WABX2000/10	16 bar (232 psi), 10 m (32.8 ft.)

Adapter cable / upgrade kits

	Pressure adapter kit:
WABC2036	M16 Plastic to MIL
	Sensor upgrade kit:
WABC2022/M	M20 Plastic to MIL
WABC2023/M	M20 Armored to MIL
	Sensor adaptor kit:
WABC2035	M16 Plastic to MIL
WABC2024/M	M20 Plastic to MIL
WABC2025/M	M20 Armored to MIL
WABC2026/M	½ in. NPT blanked to MIL
	Scanreader cable assembly:
WABC2104/05	5 m (16.4 ft.)
WABC2104/10	10 m (32.8 ft.)
WABC2104/20	20 m (65.6 ft.)
WABC2104/30	30 m (98.4 ft.)

Acknowledgements & Copyrights

Capula© is a copyright of Capula Limited 2010.
EcoTech™ is a registered trademark of
EcoTech Pty Ltd.
HydroComp is a copyright of HydroComp Inc 2010.
Microsoft Excel™ and Windows™ are registered trademarks of the Microsoft Corp.
MODBUS™ is a registered trademark of MODBUS corporation.
OSI™ is a registered trademarks of WADIS.
PMAC™ is a registered trademark of Technolog.
Primeware™ is a registered trademark of Primayer.
QTech™ is a registered trademark of QTech Data Systems Limited.
MeterVue© is a copyright of Information and Performance Services (I&P).
Topkapi™ is a registered trademark of AREAL.
Vodafone PAKNET™ and Vodafone Radiopad™ are registered trademarks of Vodafone.
Zeepaard is a copyright of Zeepaard Engineering Sdn.Bhd.

Contact us

ABB Limited
Process Automation
Oldends Lane
Stonehouse
Gloucestershire GL10 3TA
UK
Tel: +44 1453 826 661
Fax: +44 1453 829 671

ABB Inc.
Process Automation
125 E. County Line Road
Warminster
PA 18974
USA
Tel: +1 215 674 6000
Fax: +1 215 674 7183

ABB Engineering (Shanghai) Ltd.
Process Automation
No.5, Lane 369, Chuangye Road
201319, Shanghai, P.R. China
Tel: +86 (0) 21 61056666
Fax: +86 (0) 21 61056992
Mail: china.instrumentation@cn.abb.com

www.abb.com

Note
We reserve the right to make technical changes or modify the contents of this document without prior notice. With regard to purchase orders, the agreed particulars shall prevail. ABB does not accept any responsibility whatsoever for potential errors or possible lack of information in this document.

We reserve all rights in this document and in the subject matter and illustrations contained therein. Any reproduction, disclosure to third parties or utilization of its contents in whole or in parts – is forbidden without prior written consent of ABB.

Copyright© 2013 ABB
All rights reserved

3KXF223204R1001

DS/FER200/FEF200/FEV200–EN Rev. J 07.2013

Sales

Service

Software

Power and productivity
for a better world™