ABB MEASUREMENT & ANALYTICS | DATA SHEET | DS/500PROD-EN REV. H

500 PRO-D

Digital pH/ORP sensor

Measurement made easy

The ¾ in digital pH/ORP sensor for use in light industrial applications

Increased efficiency

- High-performance glass formulation designed for harsh industrial applications providing fast and accurate response over the entire pH range
- Close-coupled temperature measurement ensures high accuracy even with rapid temperature changes

EZLink™ connectivity

- Plug-and-play technology makes sensor integration fast and easy
- Advanced diagnostics providing end-of-life indication and fault analysis
- Improved measurement accuracy with digital communication

Dependable performance

- Triple junction design with ion-trap and reference shielding provides enhanced poisoning resistance
- Unique tertiary cellular junction matrix slows poisoning effects, maximizing sensor lifetime without compromising performance
- Robust Kynar® body provides high chemical and abrasion resistance
- ATEX/IECEx certified for use in hazardous areas

Modular design

- Common ¾ in sensor design paired with intelligent accessories provides mounting flexibility with safety and convenience in mind

Introduction

Making the right sensor selection for your application should be simple and easy. To help you make the right choice, we've divided our new family of pH/ORP sensors into three distinct ranges based on the applications they have been designed for: the 100, 500, and 700 ranges.

The 100 range has entry-level sensors designed for light duty use, while the 500 range offers a robust design for industrial applications. The 700 range is a specialty range for target applications.

Each electrode is clearly named and is also color-coded for ease of identification. This enables you to easily select the best sensor to meet your needs, ensuring optimal plant efficiency, performance, and lifetime—every time.

The 500 PRO-D digital pH/ORP sensor

Part of the next generation of ABB's pH/ORP sensors, the 500 PRO series features the ultimate combination of performance, functionality and durability delivering a competitive offering for harsh industrial applications.

Ruggedly designed with hazardous area approvals, the 500 PRO-D delivers complete measurement confidence and value for challenging applications including:

- wastewater effluents
- scrubbers
- dye baths
- mineral processing
- paper mills

Performance you can trust

The 500 PRO-D features ABB's advanced tertiary cellular junction matrix designed to offer exceptional performance in harsh chemical applications. This unique approach ensures an arduous pathway for poisoning elements while the ion-traps inhibit poisoning elements from reaching the reference electrode, helping extend the life of the sensor without compromising performance.

Figure 1 Sensor features

Improved process efficiency

Varying sample temperature is one of the most common causes of pH measurement error due to its impact on sensor output. The 500 PRO-D is equipped with a close-coupled temperature element capable of rapid response to quickly changing process conditions, ensuring a high level of accuracy and confidence in your measurement.

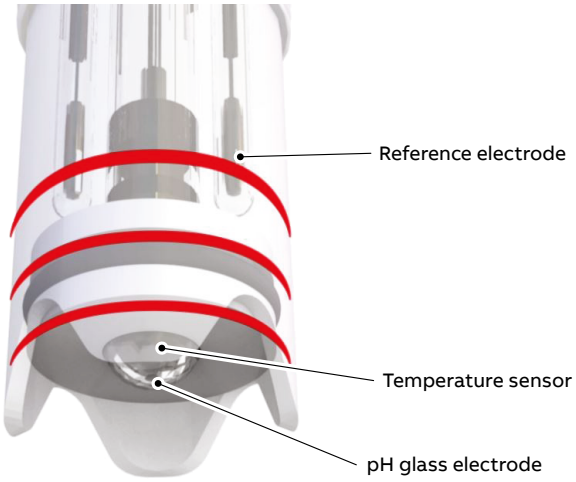

Figure 2 Temperature element location

EZLink connectivity

Convenient EZLink technology enables seamless plug-and-play integration when using the 500 PRO-D. Automatically recognized, the sensor uploads calibration, diagnostic and manufacturing information to any of ABB's EZLink-capable transmitters within seconds; significantly reducing commissioning and product maintenance.

Sensor health check
The 500 PRO-D provides advanced sensor diagnostics such as the unique perpetual impedance monitoring (patent-pending) that detects electrode faults such as **Broken Glass** or **Out-of-Sample** in real-time without the need for a solution earth.

In addition, ABB's SMART reference electrode monitoring (REM) system provides early warning notification of electrolyte loss enabling the sensor to be replenished when required, saving money without risking process control.

Enhanced accuracy
Instantaneous signal conditioning from analog to digital ensures minimal electrical interference and strengthens signal strength, greatly improving measurement accuracy even with longer cable distances.

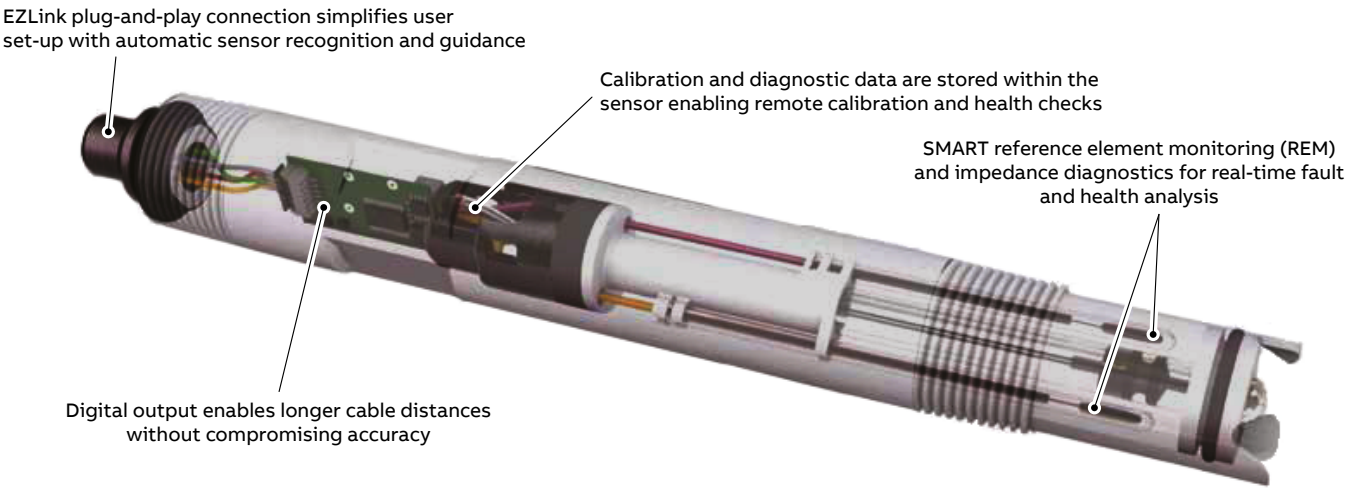

Figure 3 Key features

Robust glassware

Utilizing ABB's experience in glass manufacturing dating back to the 1950s, the proprietary glass formulations used with the 500 PRO-D offer fast response without sacrificing durability. Selectable in several configurations, the robust glassware is made suitable for wide range of general-purpose applications.

High temperature (HT) glass
Our durable high-temperature glass provides accurate, reliable measurement in applications with process temperatures of 90 °C (194 °F) or higher, making it ideal for industries such as pulp and paper and chemical processing.

Hydrofluoric acid-resistant (HF) glass
Resistant to attack and etching from hydrofluoric acid, our robust HF glass lasts up to three times longer than other commercially available HF glassware in applications containing up to 1 % (10,000 ppm) HF

Low temperature (LT) glass
For measurement below 15 °C (59 °F), our low temperature blue glass provides ultrafast response in applications such as municipal- and industrial-wastewater treatment. Available in bullet-style.

High-performance (S) glass
Our high-performance yellow glass provides fast response and accurate measurement over the entire pH range. With an extremely low sodium error, the glass can maintain its accuracy even at very high pH levels. Available in flat- or bullet-style.

ORP platinum electrode
Chemically inert, our platinum electrode is designed for conventional ORP/Redox measurement with an RTD element providing process temperature information.

Figure 4 High performance (S) glass – flat with flush body

Figure 6 Low temperature (LT) glass with notched body

Figure 5 ORP electrode with notched body

Hazardous area approval

Providing ATEX/IECEx approvals, the 500 PRO-D ensures compliance and operational safety providing peace of mind in hazardous area locations.

Product adaptability

The 500 PRO-D is available in flush or notched-body design, helping extend sensor operation and maintainability in challenging applications.

Flush-body design
The flush-body design, when paired with a flat-shaped glass electrode, helps promote self-cleaning when installed perpendicular to sample flow. In addition, the minimal protrusion prevents unwanted buildup, especially in fouling applications.

Notched-body design
The notched-body design provides additional protection for bullet-style glass electrodes, especially from abrasive applications that can damage the glass electrode rendering it unresponsive.

Intelligent accessories
The 500 PRO-D is offered with mounting accessories designed to improve adaptability into your process while providing safe and convenient operation. Available with flowcell, quick-connect bayonet and dip pole assemblies, the 500 PRO-D utilizes modular accessories that are compatible with all ABB's next generation ¾ in threaded sensor bodies.

Optional autocleaning functionality is available as an added feature ensuring extended operation with minimal intervention.

Extended storage
We understand most customers maintain stock of pH/ORP sensors in case of unexpected demand. Ensuring peak performance, even after extended storage, is critical in maintaining product availability and keeping your process running.

The 500 PRO-D is stored in a specially formulated solution with added antimicrobial agent, keeping the sensor active for up to two years when stored as recommended.

Dimensions

Dimensions in mm (in)

Flush sensor body

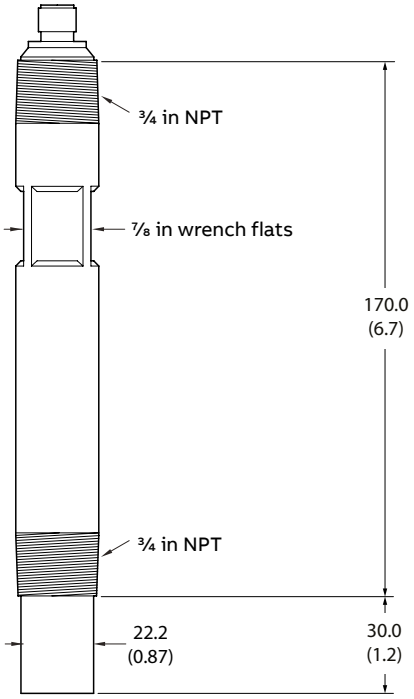

Notched sensor body

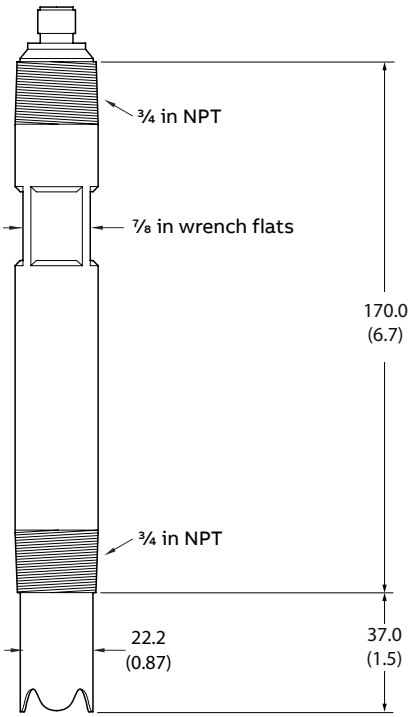

ASME B1.20.1 ¾ in NPT thread is compatible with ASME B16.11 ¾ in NPT threaded fittings including: couplings, half couplings, bosses, couplets.

Electrical connections

All digital sensors come with EZLink connectivity.

Specifications

Measurements

- pH/ORP (platinum)
- Temperature

Measurement range

High performance (S) and high temperature (HT) glass
0 to 14 pH
Hydrofluoric acid-resistant (HF) glass
0 to 12 pH
Low temperature (LT) glass
0 to 10 pH
ORP
-2,000 to 2,000 mV

Temperature range

High performance (S) glass (bullet)
0 to 100 °C (32 to 212 °F)
(typical glass impedance at 25 °C [77 °F] = 250 MΩ)
High performance (S) glass (flat)
5 to 100 °C (41 to 212 °F)
(typical glass impedance at 25 °C [77 °F] = 600 MΩ)
High temperature (HT) glass
0 to 105 °C (32 to 221 °F)
(typical glass impedance at 25 °C [77 °F] = 800 MΩ)
Hydrofluoric acid-resistant (HF) glass
0 to 80 °C (32 to 176 °F)
(typical glass impedance at 25 °C [77 °F] = 700 MΩ)
Low temperature (LT) glass
-5 to 50 °C (23 to 122 °F)
(typical glass impedance at 25 °C [77 °F] = 25 MΩ)
ORP platinum electrode
0 to 100 °C (32 to 212 °F)

Temperature sensor

Pt1000 (Class B, IEC 60751)

Maximum pressure

10 bar (145 psi)

Recommended minimum sample conductivity

50 µS/cm

Recommended sensor storage

Between 15 and 35 °C (59 and 95 °F)

Isothermal point at 25 °C (77 °F)

pH 7

Cable

EZLink digital sensor connector IP rating
IP67 (when connected)
Extension cable options
1, 3, 5, 10, 15, 25, 50 m (3.3, 9.8, 16.4, 32.8, 49.2, 82, 164 ft)
Maximum length (including optional extension cable)
Up to 210 m (689 ft)

Reference system

Ag/AgCl with triple junction, KCl gel electrolyte plus ion trap

Process connections

¾ in NPT

Wetted materials

Electrode body
PVDF (Kynar)
Reference junction system
Porous PTFE and Viton Extreme O-rings
Measure system
pH: Glass
ORP: Platinum

Approvals, certification and safety

CE Mark
Covers EMC+LV directives
(including latest version of EN61010)
Regulation 31

Drinking water approval:	Complies to DWI Regulation 31(4)(b)
Additional tests:	BS6920 parts 2.2 and 2.4 on all wetted parts

EMC
Meets requirements of IEC61326 for an industrial environment
ATEX/IECEx
Certificate numbers:
- IECEx BAS 18.0047X
- Bassefa18ATEX0071X

Entity parameters:
- Ui = 6.0 V
- Ii = 100 mA
- Ci = 30 uF
- Li = 20 uH
- Pi = 600 mW

CRN approval
Maximum allowable working pressure (MAWP): 5.58 bar (81 psi)
Design temperature: -5 °C to 105 °C (23 °F to 221 °F)
CRN number: 0F22557
MCERTS
Certificate no: Sira MC220375/00

Ordering information

500 PRO-D ¾ in pH/ORP electrode (EZLink digital)	APS522/	XX	XX	X	XX	Option
Sensor type						
pH – bullet glass for standard applications: high performance (S) glass		P2				
pH – flat glass for in-line, fouling applications: high performance (S) glass		P3				
pH – low temperature (LT) glass		P4				
pH – hydrofluoric acid-resistant (HF) glass		P5				
pH – high temperature (HT) glass		P6				
ORP (Redox) – platinum		R2				
Body style						
¾ in threaded insertion/immersion – no sensor guard (flush)			K1			
¾ in threaded insertion/immersion – notched sensor guard			K2			
Connection type						
EZLink digital				D		
Integral cable length						
None					00	
1 m (3.3 ft)					01	
3 m (10 ft)					03	
5 m (16 ft)					05	
10 m (33 ft)					10	

Optional order code

Add one or more of the following codes after the standard ordering information to select any additional options if required

Operating instructions	
English	M5
EZLink digital extension cable	
1 m (3.3 ft)	E01
5 m (16.4 ft)	E05
10 m (32.8 ft)	E10
15 m (49.2 ft)	E15
25 m (82 ft)	E25
50 m (164 ft)	E50

Accessories

Part number	Description	
3KXA163000L0002	1 in BSP bayonet polycarbonate T-piece	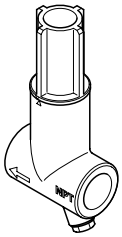
3KXA163000L0004	1 in NPT bayonet polycarbonate T-piece	
3KXA163000L0006	1 in BSP screw polycarbonate T-piece	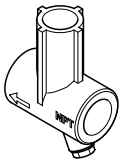
3KXA163000L0008	1 in NPT screw polycarbonate T-piece	
3KXA163000L0012	½ in NPT polycarbonate flowcell and ¾ in adapter	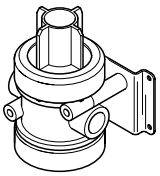
3KXA163000L0011	½ in NPT stainless steel flowcell and ¾ in adapter	
3KXA163000L0024	Protective shroud for ¾ in body	
3KXA163000L0021 3KXA163000L0022	1¼ in NB dip pole assembly 2.5 m (8.2 ft) 1 m (3.3 ft)	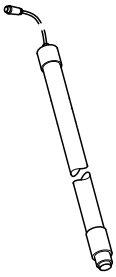
3KXA163000L0023	Dip pole kit (customer-supplied 1¼ in NB tube)	

Part number	Description	
3KXA163000L0025	Automatic cleaning system (liquid)	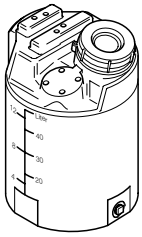
3KXA163000L0026	T-piece cleaning adaptor	
3KXA163000L0120	Calibration kit (includes calibration beaker and holder)	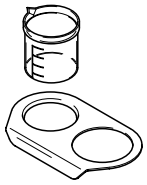
ATS4000760	Rail mounting kit (tilt only)	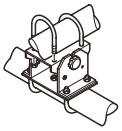
ATS4000785	Open-tank flanged dip mount	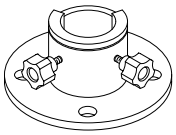
	EZLink cable	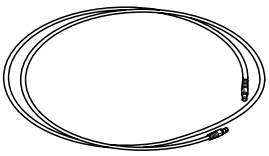
AWT4009010	1 m (3.3 ft)	
AWT4009030	3 m (9.8 ft)	
AWT4009050	5 m (16.4 ft)	
AWT4009100	10 m (32.8 ft)	
AWT4009150	15 m (49.2 ft)	
AWT4009250	25 m (82 ft)	
AWT4009500	50 m (164 ft)	

For a complete list of spares and accessories refer to Operating Instruction OI/100/500.

Acknowledgements

- EZLink it s trademark of ABB Limited
- Kynar is a registered trademark of Arkema Inc.
- Viton and Viton Extreme are trademarks of the Chemours Company

Sales

Service

Notes

Notes

Notes

—

ABB Measurement & Analytics

For your local ABB contact, visit:
www.abb.com/contacts

For more product information, visit:
www.abb.com/measurement

We reserve the right to make technical changes or modify the contents of this document without prior notice. With regard to purchase orders, the agreed particulars shall prevail.
ABB does not accept any responsibility whatsoever for potential errors or possible lack of information in this document.

We reserve all rights in this document and in the subject matter and illustrations contained therein. Any reproduction, disclosure to third parties or utilization of its contents – in whole or in parts – is forbidden without prior written consent of ABB.

© 2024 ABB
All rights reserved

DS/500PROD-EN Rev. H 05.2024