ABB MEASUREMENT & ANALYTICS | DATA SHEET | DS/100GP-EN REV. C

100 GP

Analog pH/ORP sensor

Measurement made easy

The ¾ in analog pH/ORP sensor for use in general purpose applications

Increased efficiency

- ABB's glass formulation provides fast process response without compromising durability and robustness
- Close-coupled temperature measurement ensures high accuracy even with rapid temperature changes

Dependable performance

- Enhanced double junction with ion trap delays poisoning effects ensuring the sensor operates longer in your process
- Large PTFE junction promotes fouling resistance and is easy to clean
- Durable Kynar® body provides high chemical- and abrasion-resistance

Modular design

- Common ¾ in sensor design paired with intelligent accessories provides mounting flexibility with safety and convenience in mind

Introduction

Making the right sensor selection for your application should be simple and easy. To help you make the right choice, we've divided our new family of pH/ORP sensors into three distinct ranges based on the applications they have been designed for; the 100, 500 and 700 ranges.

The 100 range are entry-level sensors designed for light duty use, while the 500 range offer a robust design for industrial applications. The 700 range are a specialty range for target applications.

Each electrode is clearly named and is also color-coded for ease of identification. This enables you to easily select the best sensor to meet your needs, ensuring optimal plant efficiency, performance and lifetime; every time.

The 100 GP analog pH/ORP sensor

Part of the next generation of ABB's pH/ORP sensors, the analog 100 GP combines exceptional performance and durability in one efficient, maintenance-free design.

Highly accurate with fast response times, the versatile 100 GP provides complete confidence in a wide range of general process applications that include:

- drinking water
- municipal wastewater
- cooling water
- food & beverage

Performance you can trust

The 100 GP features ABB's enhanced diffusion path double junction design with a polymerized gel electrolyte and chemical inhibitor, both slowing down the ion-diffusion rate and extending the length of the diffusion path. This design ensures that poisoning substances take longer to reach the encapsulated reference while the large, porous, chemically-resistant PTFE junction incorporating Viton™ seals protects against sensor fouling.

Ion trap

Ion trap captures silver chloride ions preventing blocking of the reference junction

Anti-poisoning

Reference wire protection inhibits poison attack

Anti-fouling

Large porous PTFE reference junction resists coating, reduces likelihood of blocking and is easy to clean

Improved process efficiency

Varying sample temperature is one of the most common causes of pH measurement error due to its impact on sensor output. The 100 GP is equipped with a close-coupled temperature element capable of rapid response to quickly changing process conditions, ensuring a high level of accuracy and confidence in your measurement.

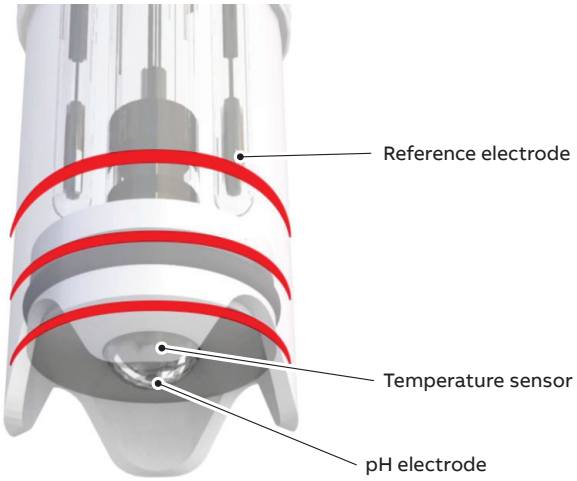

Temperature element location

Robust glassware

Utilizing ABB's experience in glass manufacturing dating back to the 1950s, the proprietary glass formulations used with the 100 GP offer fast response without sacrificing durability. Selectable in several configurations, the robust glassware is made suitable for wide range of general-purpose applications.

Low temperature (LT) glass
For measurement below 15 °C (59 °F), our low temperature blue glass provides ultrafast response in applications such as municipal- and industrial-wastewater treatment. Available in bullet-style.

High-performance (S) glass
Our high-performance yellow glass provides fast response and accurate measurement over the entire pH range. With an extremely low sodium error, the glass can maintain its accuracy even at very high pH levels. Available in flat- or bullet-style.

ORP platinum electrode
Chemically inert, our platinum electrode is design for conventional ORP/Redox measurement with an RTD element providing process temperature information.

High performance (S) glass – flat with flush body

Low temperature (LT) glass with notched body

ORP electrode with notched body

Product adaptability

The 100 GP is available in flush- or notched-body design helping extend sensor operation and maintainability in challenging applications.

Flush-body design
The flush-body design, when paired with a flat-shaped glass electrode, helps promote self-cleaning when installed perpendicular to sample flow. In addition, the minimal protrusion prevents unwanted buildup, especially in fibrous applications.

Notched-body design
The notched-body design provides additional protection for bullet-style glass electrodes; especially from abrasive applications that can damage the glass electrode rendering it unresponsive.

Intelligent acessories
The 100 GP is offered with mounting accessories designed to improve adaptability into your process while providing safe and convenient operation. Available with flow-cell, quick-connect bayonet and dip pole assemblies, the 100 GP utilizes modular accessories that are compatible with all ABB's next generation ¾ in threaded sensor bodies.

Optional auto-cleaning functionality is available as an added feature, ensuring extended operation with minimal intervention.

Extended storage
We understand most customers maintain stock of pH/ORP sensors in case of unexpected demand. Ensuring peak performance, even after extended storage, is critical in maintaining product availability and keeping your process running.

The 100 GP is stored in a specially-formulated solution with added anti-microbial agent keeping the sensor active for up to 2 years when stored as recommended.

Dimensions

Dimensions in mm (in)

Flush sensor body

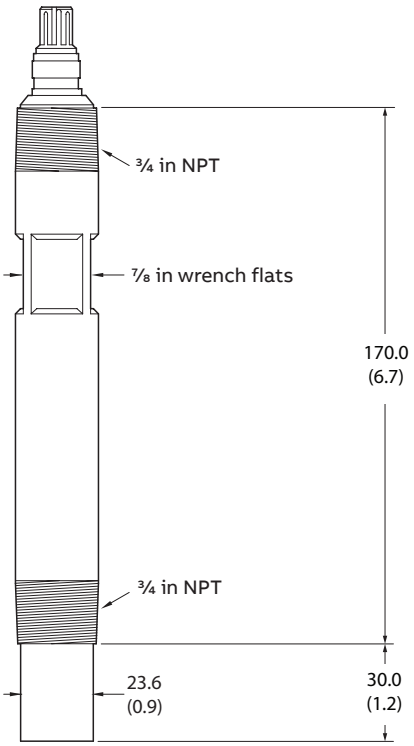

Notched sensor body

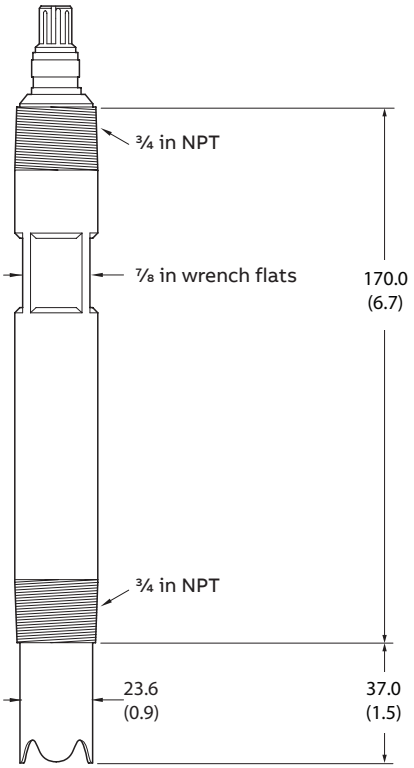

Electrical connections

Wire color	Function
Blue	Glass electrode/ORP
Yellow	Guard
Black	Reference electrode
Red	2-wire compensation
White	2-wire compensation
Grey	3rd wire

Specification

Measurements

- pH/ORP (platinum)
- Temperature

Measurement range

High performance (S) glass
0 to 14 pH
Low temperature (LT) glass
0 to 10 pH
ORP
–2000 to 2000 mV

Temperature range

High performance (S) glass (bullet)
0 to 60 °C (32 to 140 °F)
(typical glass impedance at 25 °C [77 °F] = 250 MΩ)
High performance (S) glass (flat)
5 to 60 °C (41 to 140 °F)
(typical glass impedance at 25 °C [77 °F] = 600 MΩ)
Low temperature (LT) glass
–5 to 50 °C (23 to 122 °F)
(typical glass impedance at 25 °C [77 °F] = 25 MΩ)
ORP platinum electrode
0 to 60 °C (32 to 140 °F)

Temperature sensor

Pt100 (Class B, IEC 60751)

Maximum pressure

6 bar (90 psi)

Recommended minimum sample conductivity

50 µS/cm

Recommended sensor storage

Between 15 and 35 °C (59 and 95 °F)

Isothermal point at 25 °C (77 °F)

pH 7

Reference system

Ag/AgCl with KCl gel electrolyte, double junction plus ion trap

Process connections

¾ in NPT

Wetted materials

Electrode body
PVDF (Kynar)
Reference junction system
Porous PTFE and Viton O-rings
Measure system
pH: Glass
ORP: Platinum

Approvals, certification and safety

CE Mark
Covers EMC+LV directives
(including latest version of EN61010)
Regulation 31

Drinking water approval:	Complies to DWI Regulation 31(4)(b)
Additional tests:	BS6920 parts 2.2 and 2.4 on all wetted parts

EMC
Meets requirements of IEC61326 for an industrial environment

CRN approval
Maximum allowable working pressure (MAWP): 5.58 bar (81 psi)
Design temperature: –5 °C to 105 °C (23 °F to 221 °F)
CRN number: 0F22557

Ordering information

100 GP ¾ in pH/ORP electrode	**APS121/**	**XX**	**XX**	**X**	**XX**		**XX**
Sensor type							
pH – bullet glass for standard applications: high performance (S) glass		P2					
pH – flat glass for in-line, fouling applications: high performance (S) glass		P3					
pH – low temperature (LT) glass		P4					
ORP (Redox) – platinum		R2					
Body style							
¾ in threaded insertion/immersion – no sensor guard (flush)			K1				
¾ in threaded insertion/immersion – notched sensor guard			K2				
Connection type							
Tagged leads				A			
BNC on pH/ORP + temperature compensator connector				N			
VarioPin cable connector [1]				V			
Integral cable length							
None					00		
1 m (3.3 ft)					01		
3 m (10 ft)					03		
5 m (16 ft)					05		
10 m (33 ft)					10		
Optional order code							
Operating instructions							
English							M5

[1] Available only with integral cable length option '00'. Refer to **Accessories** for VP cable part numbers

Accessories

Part number	Description	
3KXA163000L0002 3KXA163000L0004	1 in BSP bayonet polycarbonate T-piece 1 in NPT bayonet polycarbonate T-piece	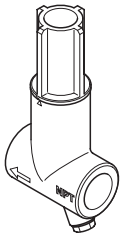
3KXA163000L0006 3KXA163000L0008	1 in BSP screw polycarbonate T-piece 1 in NPT screw polycarbonate T-piece	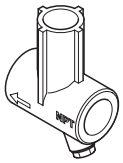
3KXA163000L0012 3KXA163000L0011	½ in NPT polycarbonate flow-cell and ¾ in adapter ½ in NPT stainless steel flow-cell and ¾ in adapter	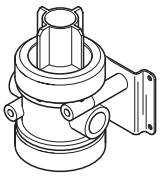
3KXA163000L0024	Protective shroud for ¾ in body	
3KXA163000L0021 3KXA163000L0022	1¼ in NB dip pole assembly 2.5 m (8.2 ft) 1 m (3.3 ft)	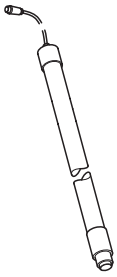
3KXA163000L0023	Dip pole kit (customer-supplied 1¼ in NB tube)	

Part number	Description	
3KXA163000L0025	Automatic cleaning system (liquid)	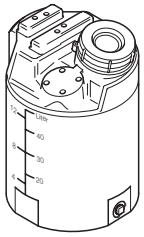
3KXA163000L0026	T-piece cleaning adaptor	
3KXA163000L0120	Calibration kit (includes calibration beaker and holder)	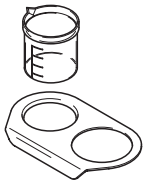
ATS4000760	Rail mounting kit (tilt only)	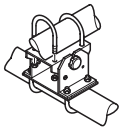
	VP cable	
3KXA163000L0051	1 m (3.3 ft)	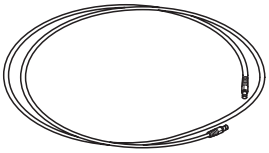
3KXA163000L0052	3 m (9.9 ft)	
3KXA163000L0053	5 m (16.4 ft)	
3KXA163000L0054	10 m (32.8 ft)	
3KXA163000L0055	15 m (49.2 ft)	
3KXA163000L0056	30 m (98.4 ft)	

For a complete list of spares and accessories refer to Operating Instruction OI/100/500-EN

Notes

Sales

Service

Acknowledgements
Kynar is a registered trademark of Arkema Inc.

Viton ia a registered trademark of the Chemours Company

—

ABB Measurement & Analytics

For your local ABB contact, visit:
www.abb.com/contacts

For more product information, visit:
abb.com/measurement

We reserve the right to make technical changes or modify the contents of this document without prior notice. With regard to purchase orders, the agreed particulars shall prevail.
ABB does not accept any responsibility whatsoever for potential errors or possible lack of information in this document.

We reserve all rights in this document and in the subject matter and illustrations contained therein.
Any reproduction, disclosure to third parties or utilization of its contents – in whole or in parts – is forbidden without prior written consent of ABB.

© 2021 ABB
All rights reserved

DS/100GP-EN Rev. C 07.2021